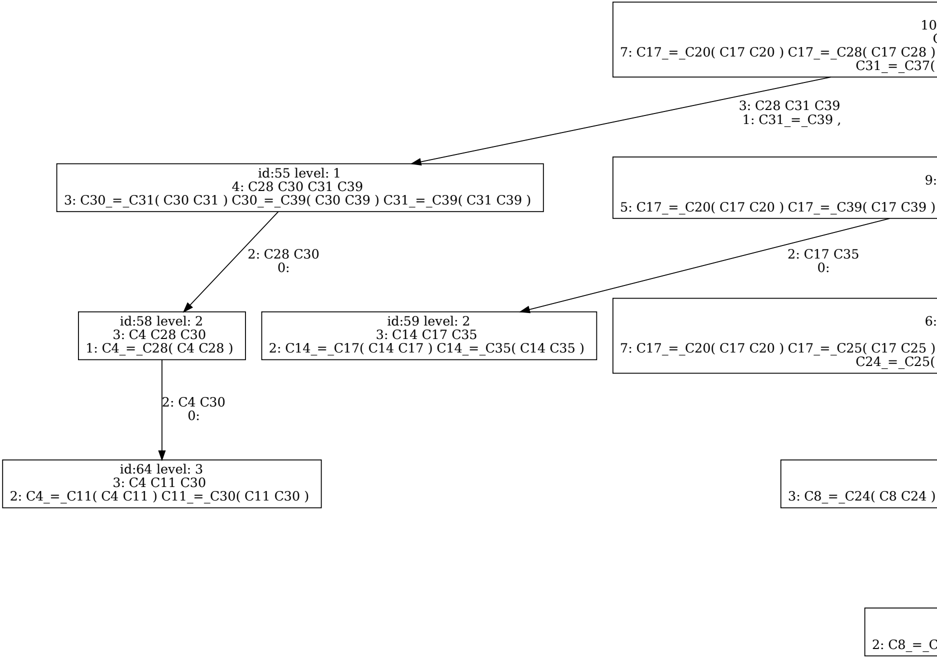
10
(
7: C17_=_C20(C17 C20) C17_=_C28(C17 C28)
C31_=_C37(
3: C28 C31 C39
1: C31_=_C39 ,
id:55 level: 1
4: C28 C30 C31 C39
3: C30_=_C31(C30 C31) C30_=_C39(C30 C39) C31_=_C39(C31 C39)
9:
5: C17_=_C20(C17 C20) C17_=_C39(C17 C39)
2: C28 C30
0:
2: C17 C35
0:
id:58 level: 2
3: C4 C28 C30
1: C4_=_C28(C4 C28)
id:59 level: 2
3: C14 C17 C35
2: C14_=_C17(C14 C17) C14_=_C35(C14 C35)
6:
7: C17_=_C20(C17 C20) C17_=_C25(C17 C25)
C24_=_C25(
2: C4 C30
0:
id:64 level: 3
3: C4 C11 C30
2: C4_=_C11(C4 C11) C11_=_C30(C11 C30)
3: C8_=_C24(C8 C24)
2: C8_=_C

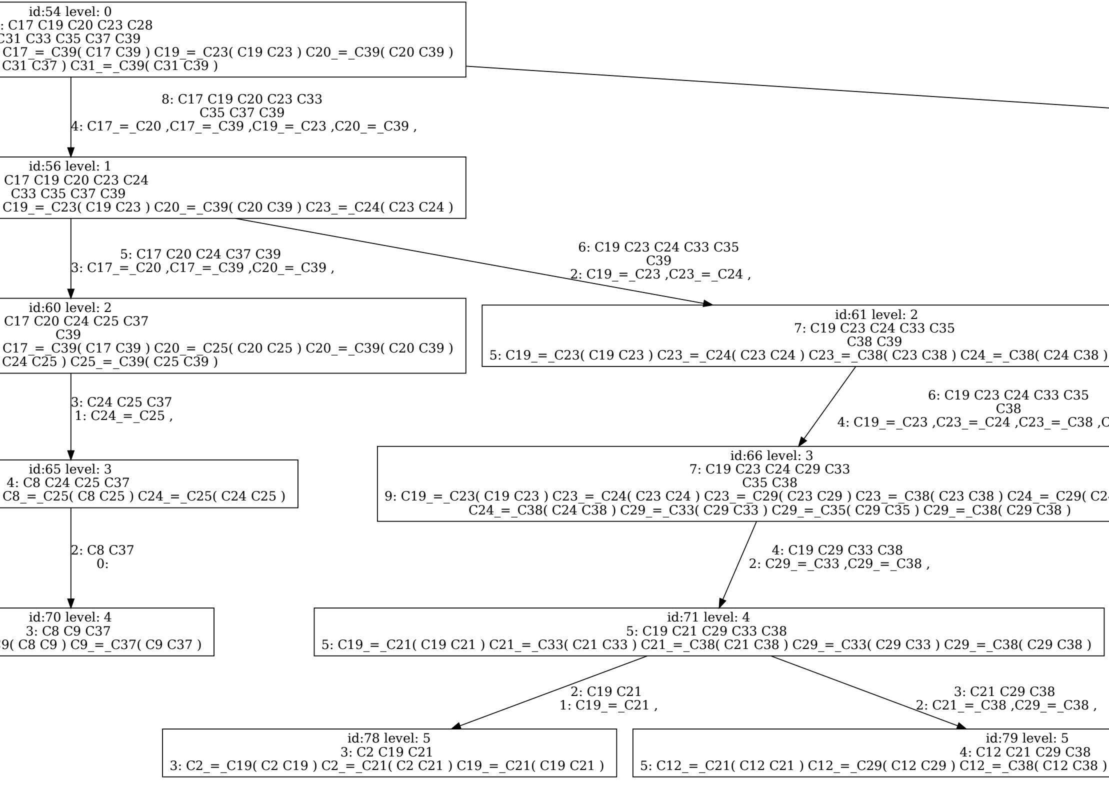
id:54 level: 0
: C17 C19 C20 C23 C28
C31 C33 C35 C37 C39
C17_=_C39(C17 C39) C19_=_C23(C19 C23) C20_=_C39(C20 C39)
C31 C37) C31_=_C39(C31 C39)
8: C17 C19 C20 C23 C33
C35 C37 C39
4: C17_=_C20 ,C17_=_C39 ,C19_=_C23 ,C20_=_C39 ,
id:56 level: 1
C17 C19 C20 C23 C24
C33 C35 C37 C39
C19_=_C23(C19 C23) C20_=_C39(C20 C39) C23_=_C24(C23 C24)
5: C17 C20 C24 C37 C39
3: C17_=_C20 ,C17_=_C39 ,C20_=_C39 ,
6: C19 C23 C24 C33 C35
C39
2: C19_=_C23 ,C23_=_C24 ,
id:60 level: 2
C17 C20 C24 C25 C37
C39
C17_=_C39(C17 C39) C20_=_C25(C20 C25) C20_=_C39(C20 C39)
C24 C25) C25_=_C39(C25 C39)
id:61 level: 2
7: C19 C23 C24 C33 C35
C38 C39
5: C19_=_C23(C19 C23) C23_=_C24(C23 C24) C23_=_C38(C23 C38) C24_=_C38(C24 C38)
3: C24 C25 C37
1: C24_=_C25 ,
6: C19 C23 C24 C33 C35
C38
4: C19_=_C23 ,C23_=_C24 ,C23_=_C38 ,C
id:65 level: 3
4: C8 C24 C25 C37
C8_=_C25(C8 C25) C24_=_C25(C24 C25)
id:66 level: 3
7: C19 C23 C24 C29 C33
C35 C38
9: C19_=_C23(C19 C23) C23_=_C24(C23 C24) C23_=_C29(C23 C29) C23_=_C38(C23 C38) C24_=_C29(C2
C24_=_C38(C24 C38) C29_=_C33(C29 C33) C29_=_C35(C29 C35) C29_=_C38(C29 C38)
2: C8 C37
0:
4: C19 C29 C33 C38
2: C29_=_C33 ,C29_=_C38 ,
id:70 level: 4
3: C8 C9 C37
9(C8 C9) C9_=_C37(C9 C37)
id:71 level: 4
5: C19 C21 C29 C33 C38
5: C19_=_C21(C19 C21) C21_=_C33(C21 C33) C21_=_C38(C21 C38) C29_=_C33(C29 C33) C29_=_C38(C29 C38)
2: C19 C21
1: C19_=_C21 ,
3: C21 C29 C38
2: C21_=_C38 ,C29_=_C38 ,
id:78 level: 5
3: C2 C19 C21
3: C2_=_C19(C2 C19) C2_=_C21(C2 C21) C19_=_C21(C19 C21)
id:79 level: 5
4: C12 C21 C29 C38
5: C12_=_C21(C12 C21) C12_=_C29(C12 C29) C12_=_C38(C12 C38)

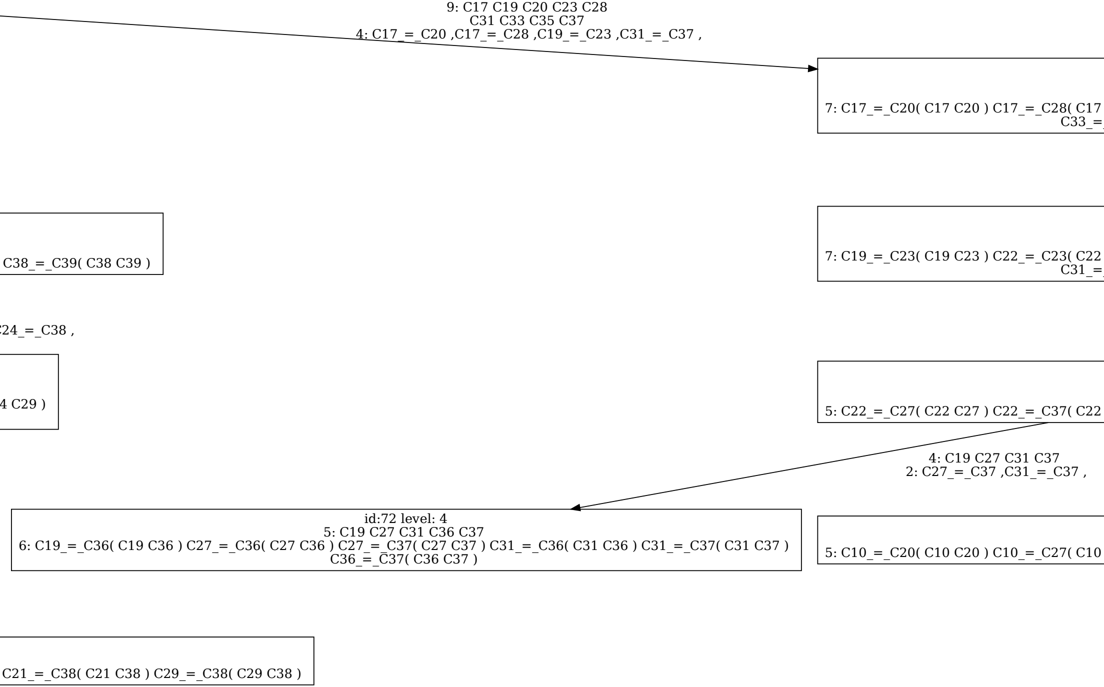

9: C17 C19 C20 C23 C28
C31 C33 C35 C37
4: C17_=_C20 ,C17_=_C28 ,C19_=_C23 ,C31_=_C37 ,
7: C17_=_C20(C17 C20) C17_=_C28(C17
C33_=
C38_=_C39(C38 C39)
7: C19_=_C23(C19 C23) C22_=_C23(C22
C31_=
C24_=_C38 ,
4 C29)
5: C22_=_C27(C22 C27) C22_=_C37(C22
4: C19 C27 C31 C37
2: C27_=_C37 ,C31_=_C37 ,
id:72 level: 4
5: C19 C27 C31 C36 C37
6: C19_=_C36(C19 C36) C27_=_C36(C27 C36) C27_=_C37(C27 C37) C31_=_C36(C31 C36) C31_=_C37(C31 C37)
C36_=_C37(C36 C37)
5: C10_=_C20(C10 C20) C10_=_C27(C10
C21_=_C38(C21 C38) C29_=_C38(C29 C38)

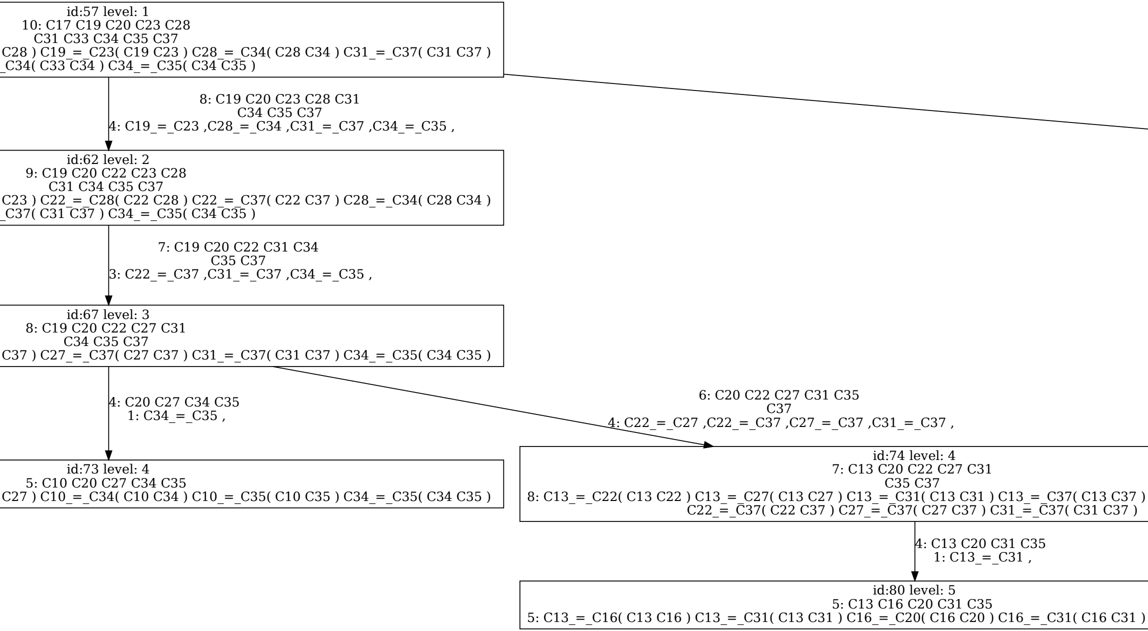
id:57 level: 1
10: C17 C19 C20 C23 C28
C31 C33 C34 C35 C37
C28) C19_=_C23(C19 C23) C28_=_C34(C28 C34) C31_=_C37(C31 C37)
_C34(C33 C34) C34_=_C35(C34 C35)
8: C19 C20 C23 C28 C31
C34 C35 C37
4: C19_=_C23 ,C28_=_C34 ,C31_=_C37 ,C34_=_C35 ,
id:62 level: 2
9: C19 C20 C22 C23 C28
C31 C34 C35 C37
C23) C22_=_C28(C22 C28) C22_=_C37(C22 C37) C28_=_C34(C28 C34)
_C37(C31 C37) C34_=_C35(C34 C35)
7: C19 C20 C22 C31 C34
C35 C37
3: C22_=_C37 ,C31_=_C37 ,C34_=_C35 ,
id:67 level: 3
8: C19 C20 C22 C27 C31
C34 C35 C37
C37) C27_=_C37(C27 C37) C31_=_C37(C31 C37) C34_=_C35(C34 C35)
4: C20 C27 C34 C35
1: C34_=_C35 ,
6: C20 C22 C27 C31 C35
C37
4: C22_=_C27 ,C22_=_C37 ,C27_=_C37 ,C31_=_C37 ,
id:73 level: 4
5: C10 C20 C27 C34 C35
C27) C10_=_C34(C10 C34) C10_=_C35(C10 C35) C34_=_C35(C34 C35)
id:74 level: 4
7: C13 C20 C22 C27 C31
C35 C37
8: C13_=_C22(C13 C22) C13_=_C27(C13 C27) C13_=_C31(C13 C31) C13_=_C37(C13 C37)
C22_=_C37(C22 C37) C27_=_C37(C27 C37) C31_=_C37(C31 C37)
4: C13 C20 C31 C35
1: C13_=_C31 ,
id:80 level: 5
5: C13 C16 C20 C31 C35
5: C13_=_C16(C13 C16) C13_=_C31(C13 C31) C16_=_C20(C16 C20) C16_=_C31(C16 C31)

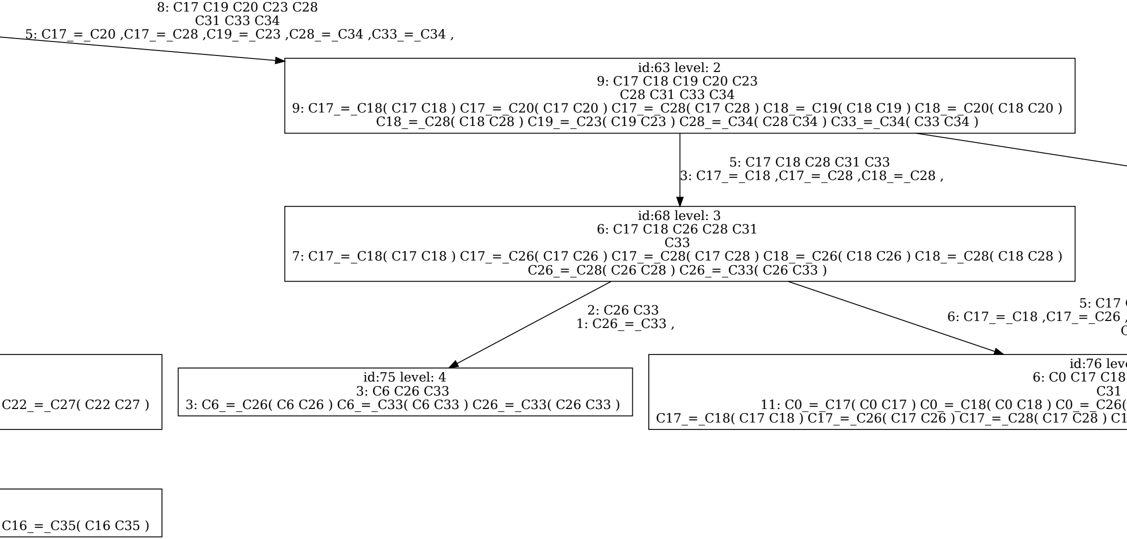
8: C17 C19 C20 C23 C28
C31 C33 C34
5: C17_=_C20 ,C17_=_C28 ,C19_=_C23 ,C28_=_C34 ,C33_=_C34 ,
id:63 level: 2
9: C17 C18 C19 C20 C23
C28 C31 C33 C34
9: C17_=_C18(C17 C18) C17_=_C20(C17 C20) C17_=_C28(C17 C28) C18_=_C19(C18 C19) C18_=_C20(C18 C20)
C18_=_C28(C18 C28) C19_=_C23(C19 C23) C28_=_C34(C28 C34) C33_=_C34(C33 C34)
5: C17 C18 C28 C31 C33
3: C17_=_C18 ,C17_=_C28 ,C18_=_C28 ,
id:68 level: 3
6: C17 C18 C26 C28 C31
C33
7: C17_=_C18(C17 C18) C17_=_C26(C17 C26) C17_=_C28(C17 C28) C18_=_C26(C18 C26) C18_=_C28(C18 C28)
C26_=_C28(C26 C28) C26_=_C33(C26 C33)
2: C26 C33
1: C26_=_C33 ,
5: C17
6: C17_=_C18 ,C17_=_C26 ,
C
C22_=_C27(C22 C27)
id:75 level: 4
3: C6 C26 C33
3: C6_=_C26(C6 C26) C6_=_C33(C6 C33) C26_=_C33(C26 C33)
id:76 leve
6: C0 C17 C18
C31
11: C0_=_C17(C0 C17) C0_=_C18(C0 C18) C0_=_C26(
C17_=_C18(C17 C18) C17_=_C26(C17 C26) C17_=_C28(C17 C28) C1
C16_=_C35(C16 C35)

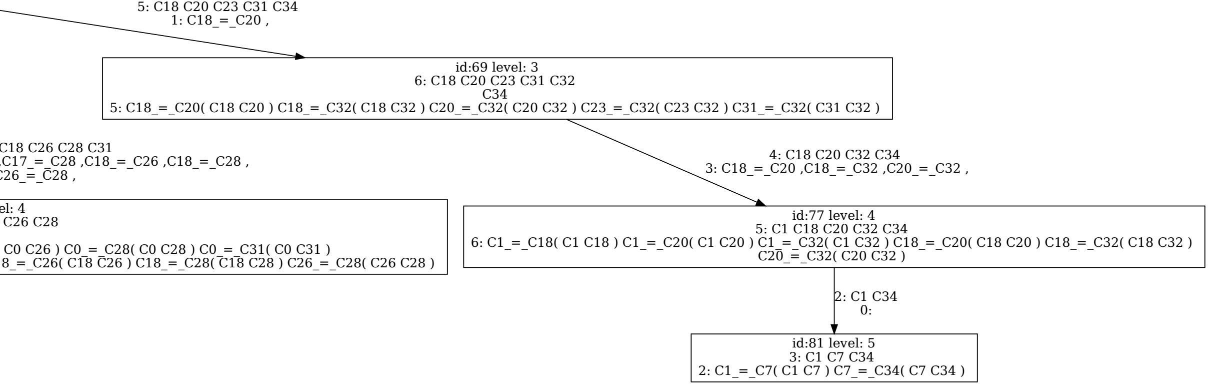
5: C18 C20 C23 C31 C34
1: C18_=_C20 ,
id:69 level: 3
6: C18 C20 C23 C31 C32
C34
5: C18_=_C20(C18 C20) C18_=_C32(C18 C32) C20_=_C32(C20 C32) C23_=_C32(C23 C32) C31_=_C32(C31 C32)
C18 C26 C28 C31
,C17_=_C28 ,C18_=_C26 ,C18_=_C28 ,
C26_=_C28 ,
el: 4
C26 C28
C0 C26) C0_=_C28(C0 C28) C0_=_C31(C0 C31)
8_=_C26(C18 C26) C18_=_C28(C18 C28) C26_=_C28(C26 C28)
4: C18 C20 C32 C34
3: C18_=_C20 ,C18_=_C32 ,C20_=_C32 ,
id:77 level: 4
5: C1 C18 C20 C32 C34
6: C1_=_C18(C1 C18) C1_=_C20(C1 C20) C1_=_C32(C1 C32) C18_=_C20(C18 C20) C18_=_C32(C18 C32)
C20_=_C32(C20 C32)
2: C1 C34
0:
id:81 level: 5
3: C1 C7 C34
2: C1_=_C7(C1 C7) C7_=_C34(C7 C34)