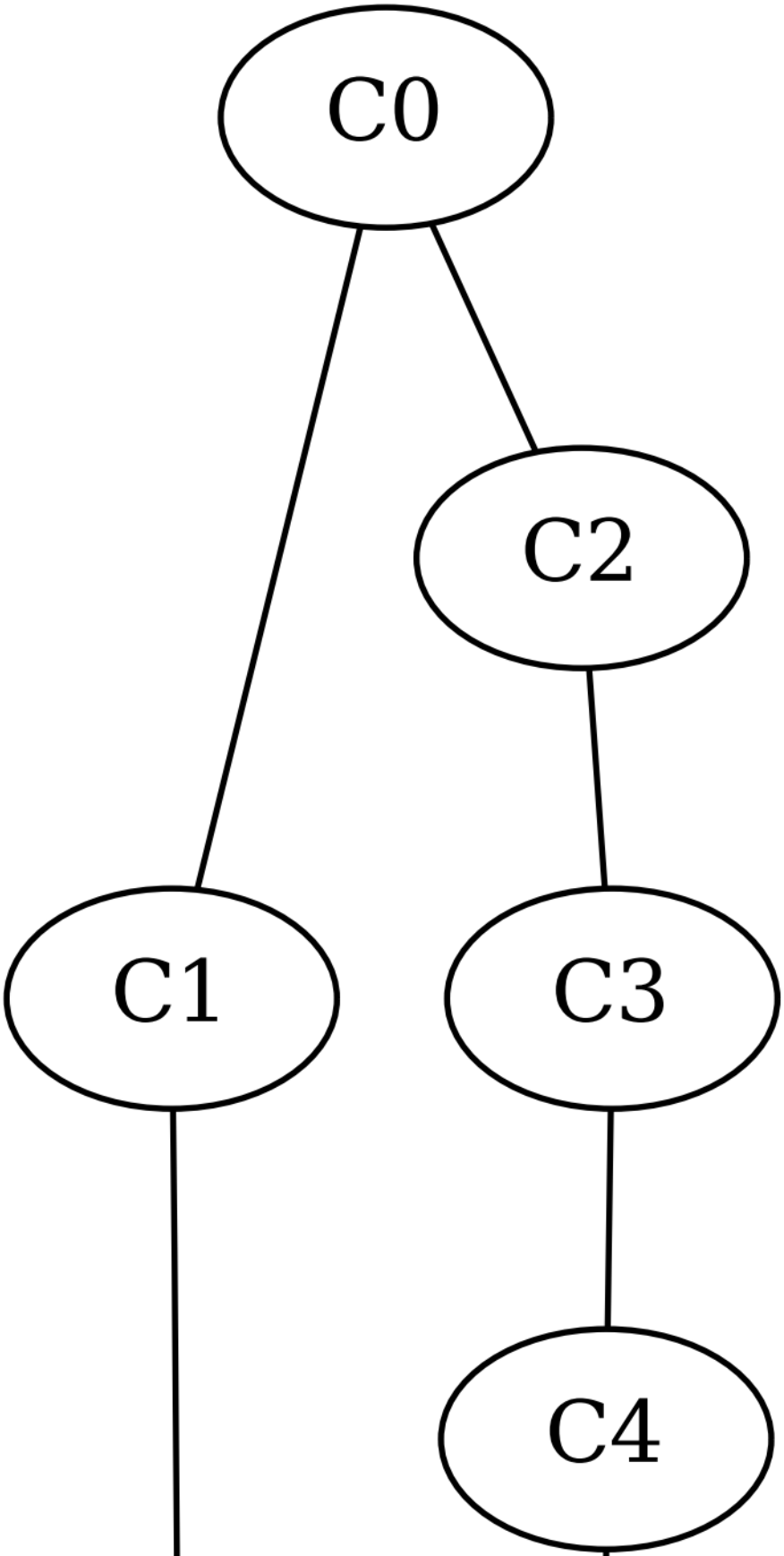
C0
C2
C1
C3
C4

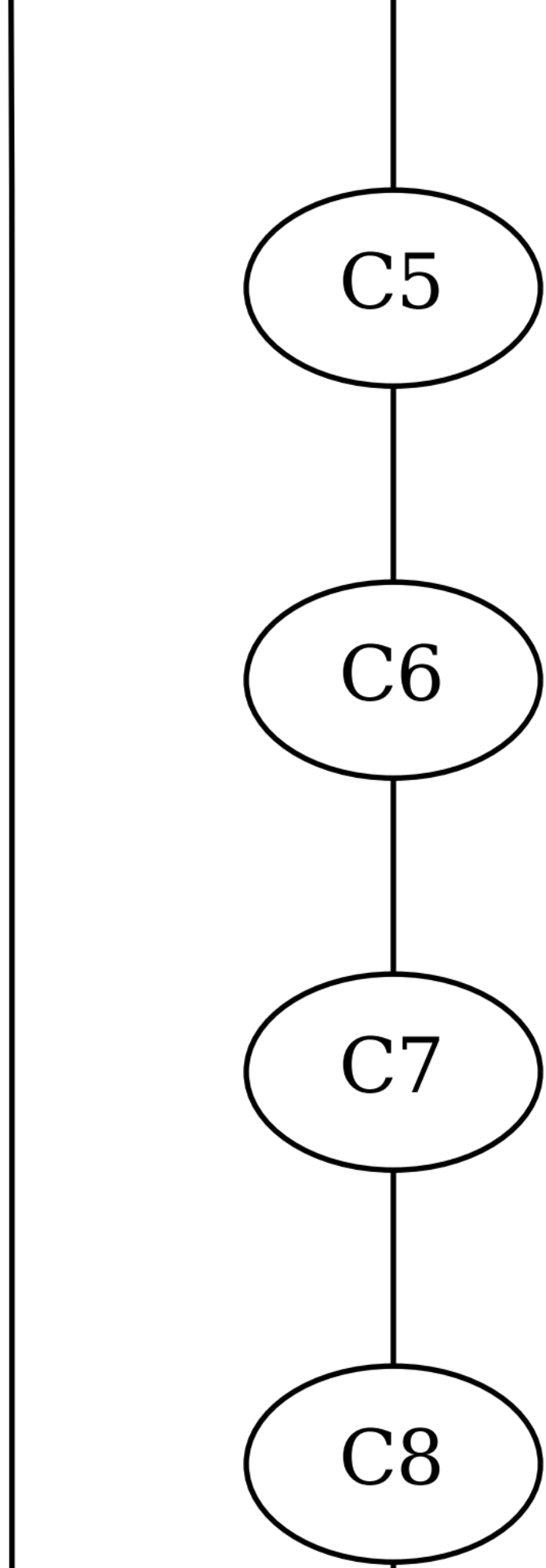
C5
C6
C7
C8

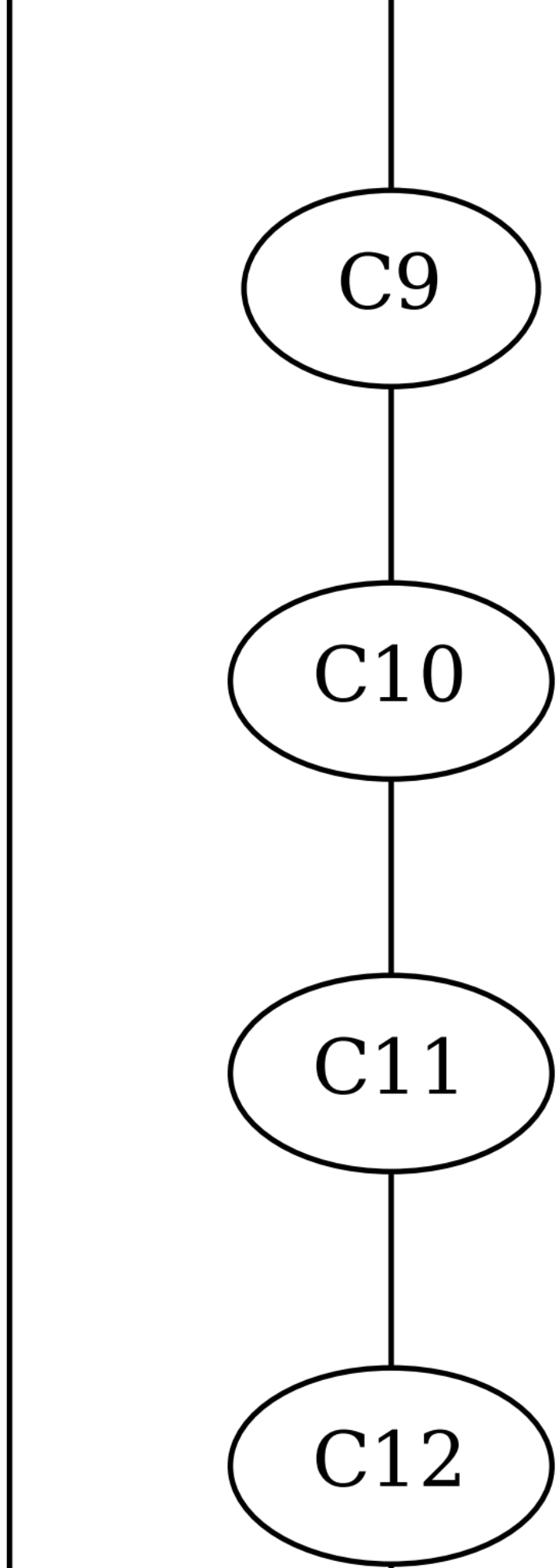
C9
C10
C11
C12

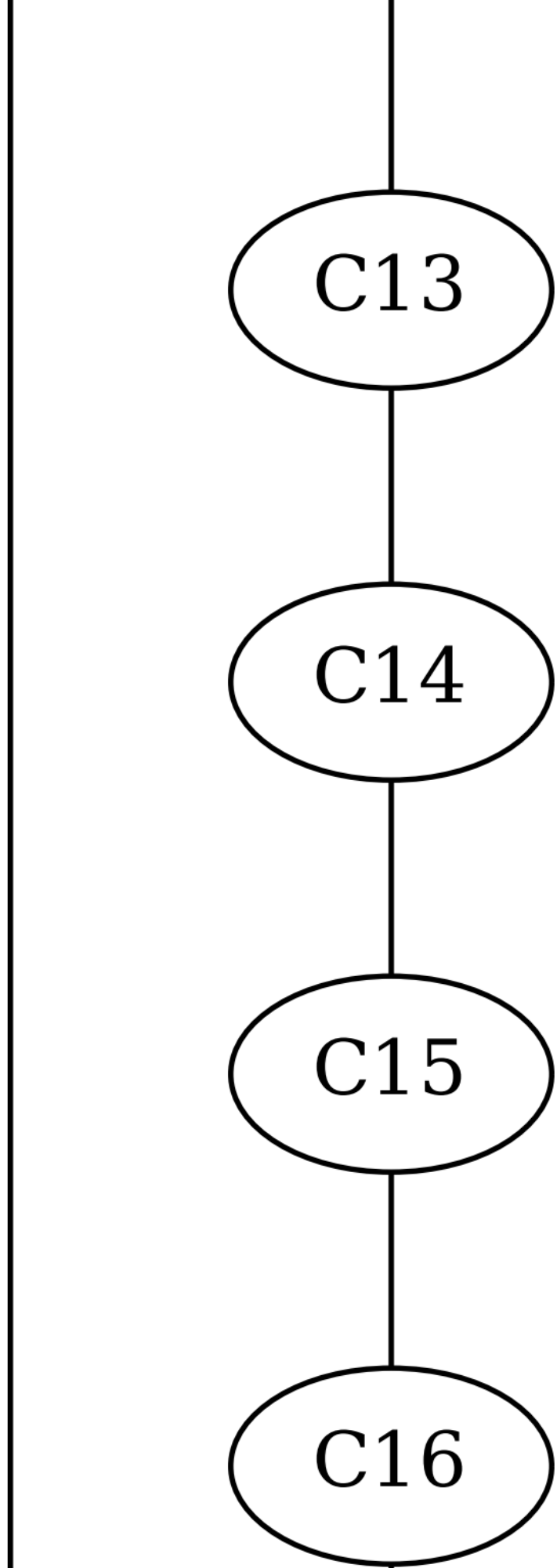
C13
C14
C15
C16

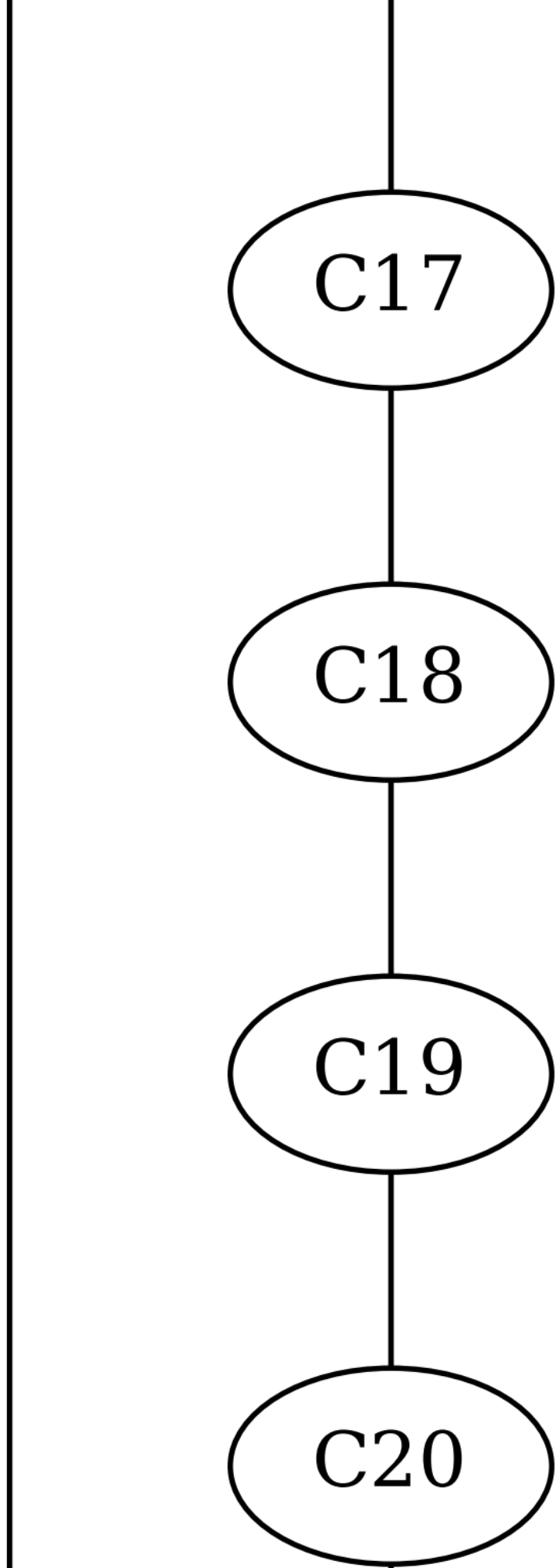
C17
C18
C19
C20

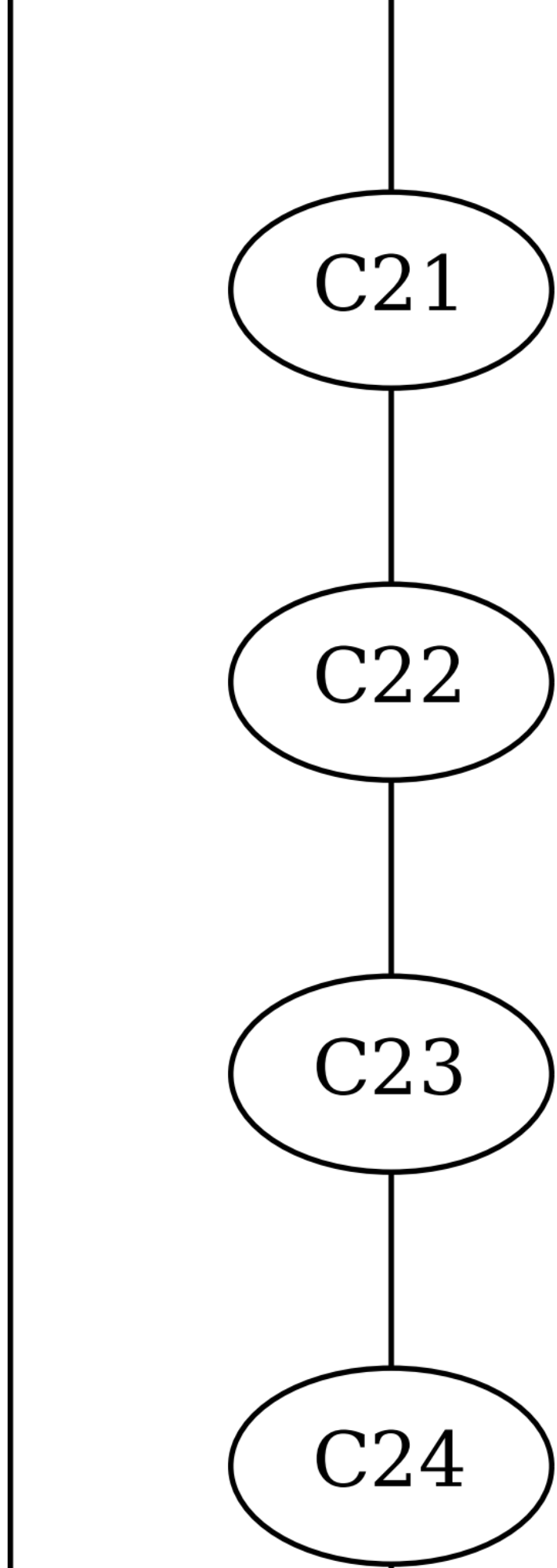
C21
C22
C23
C24

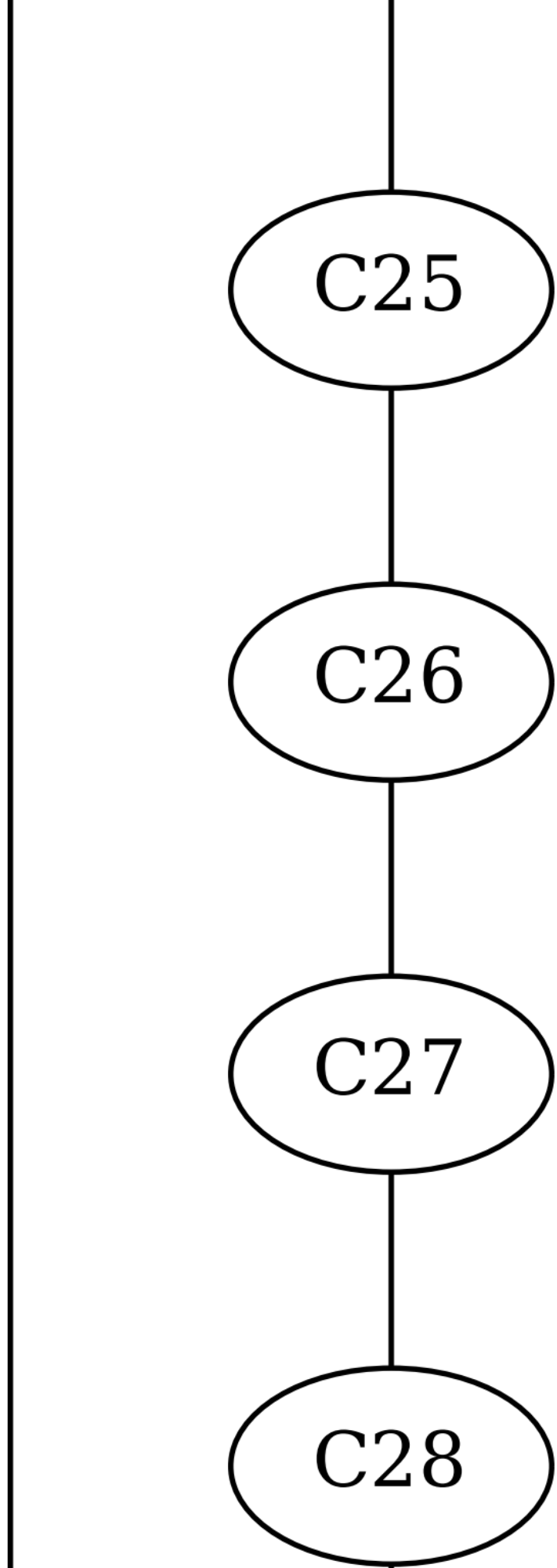
C25
C26
C27
C28

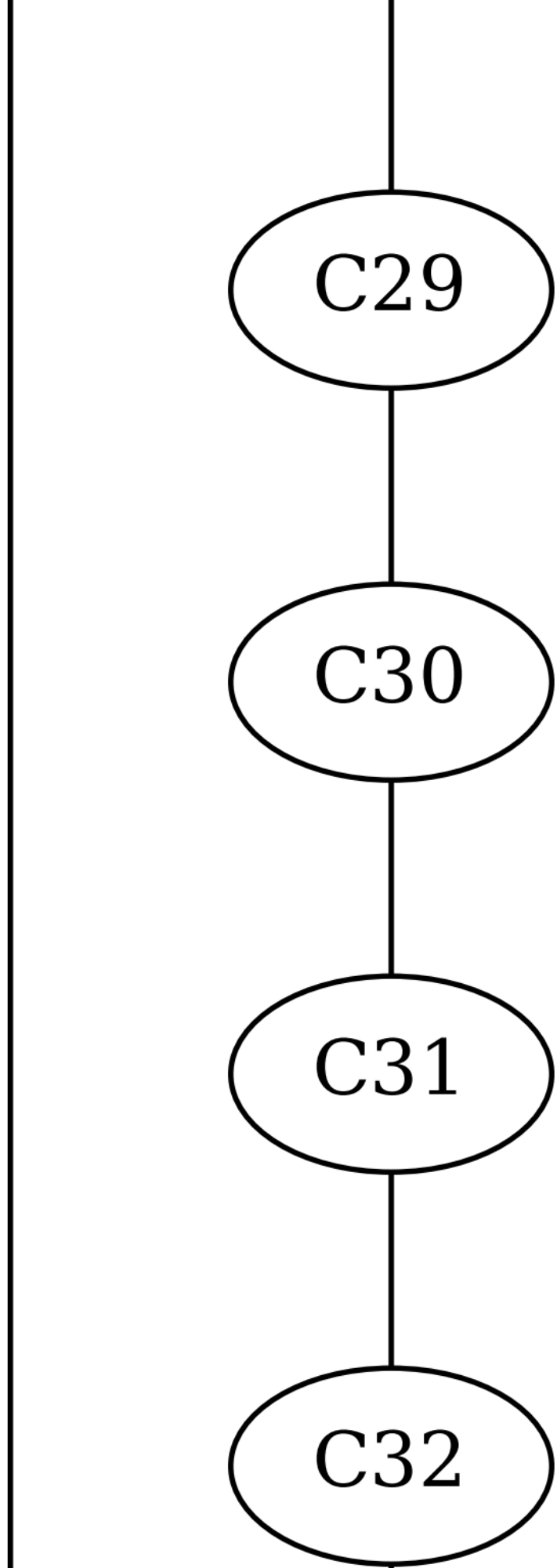
C29
C30
C31
C32

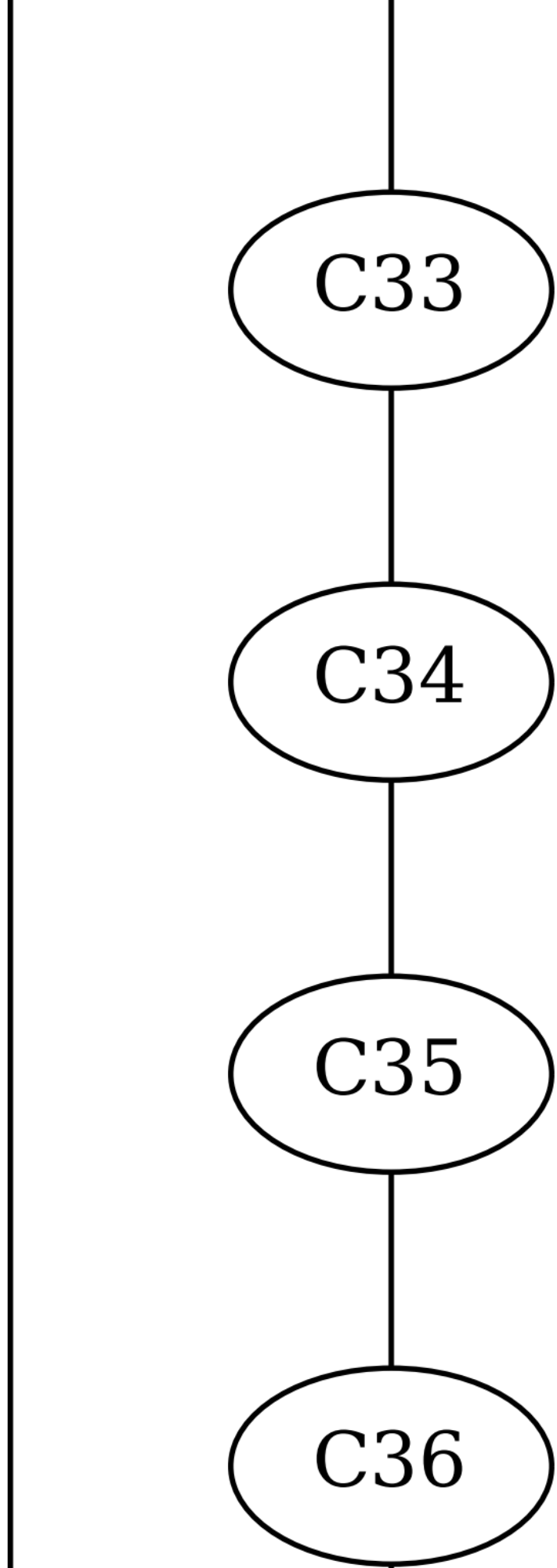
C33
C34
C35
C36

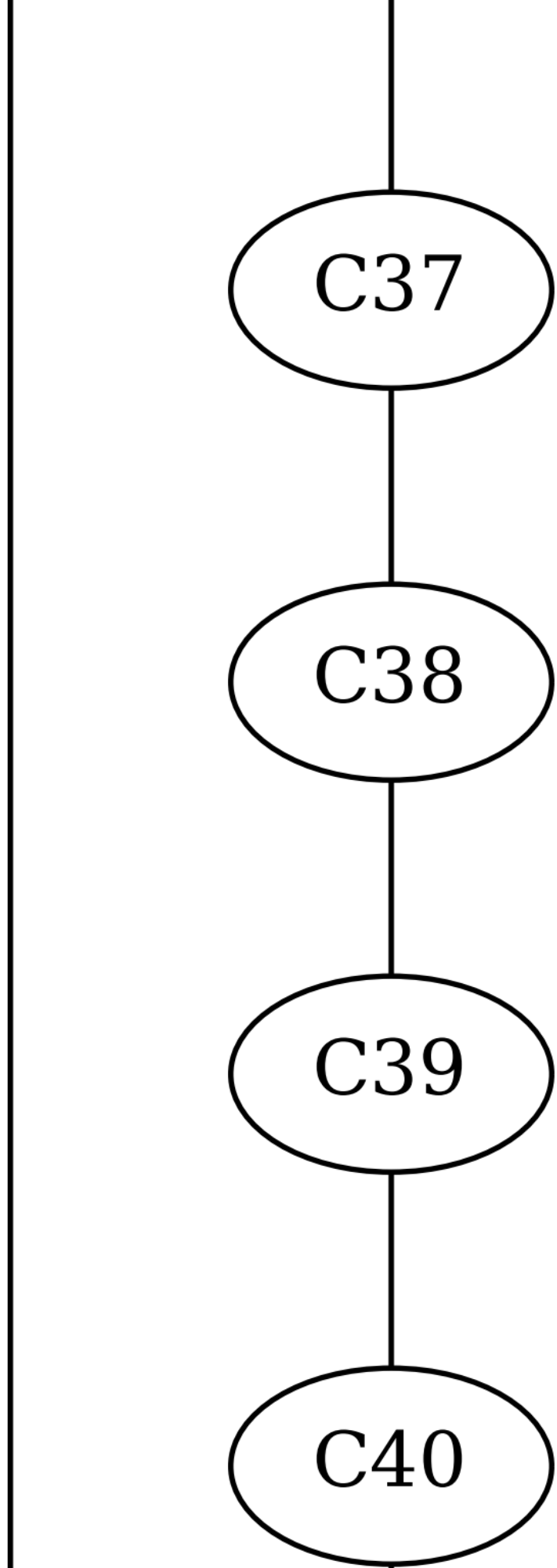
C37
C38
C39
C40

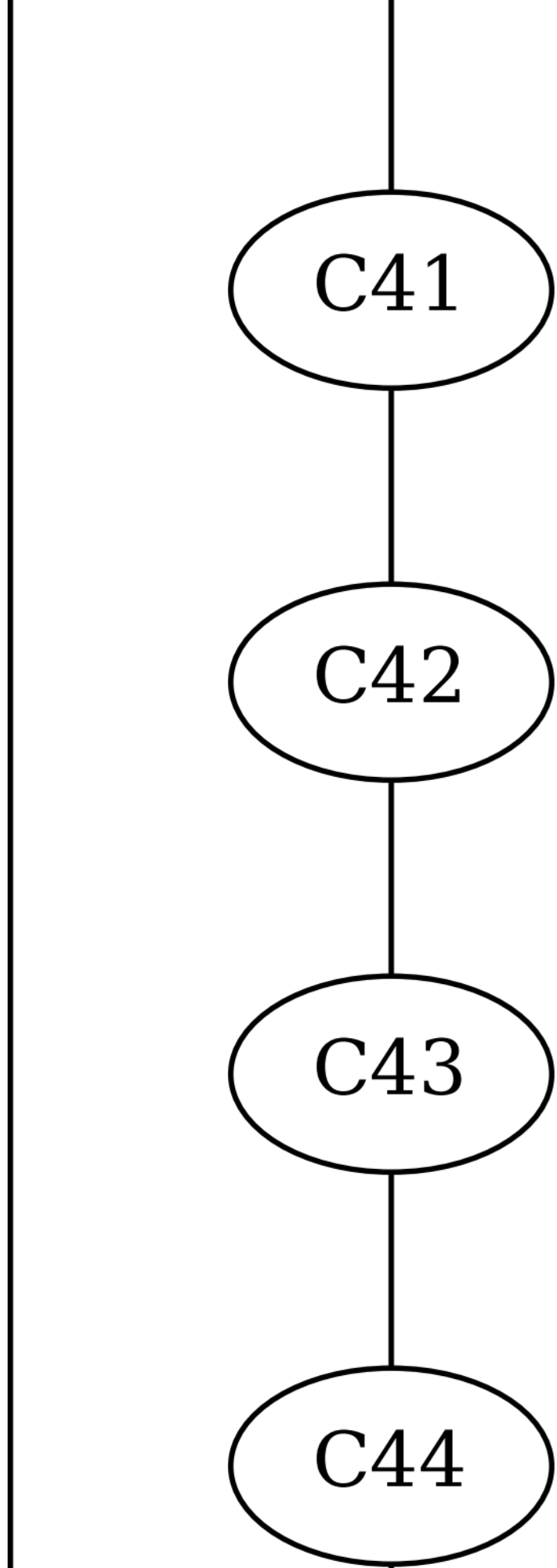
C41
C42
C43
C44

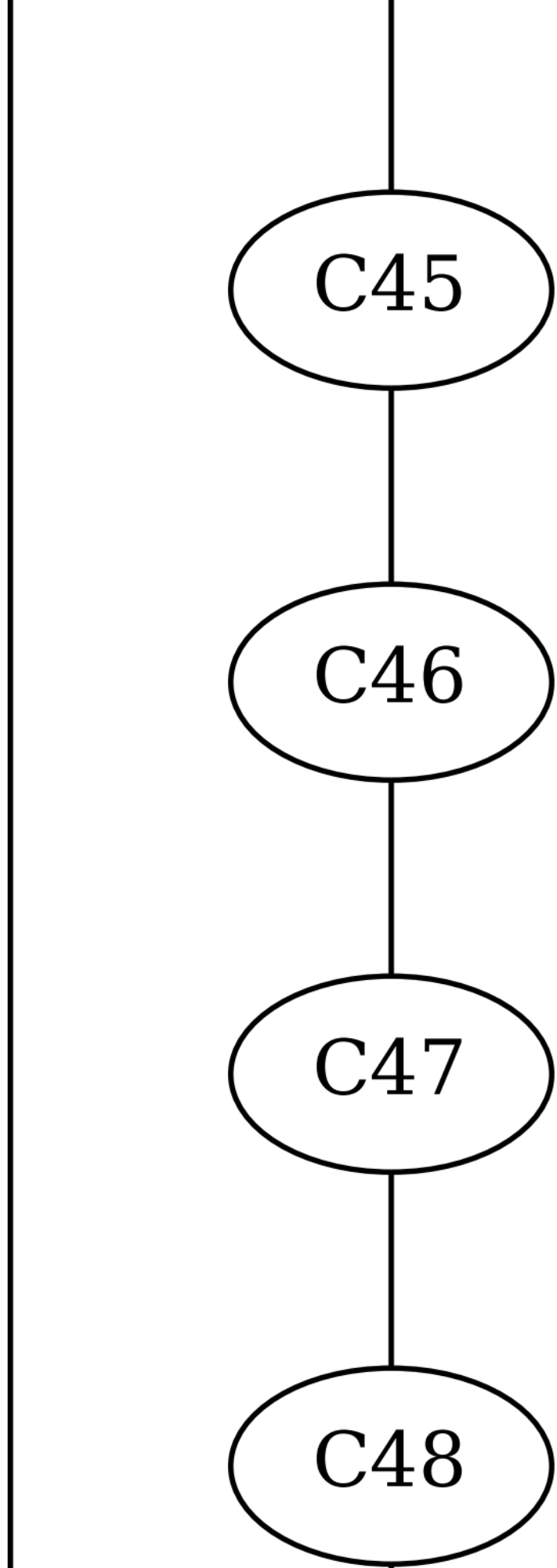
C45
C46
C47
C48

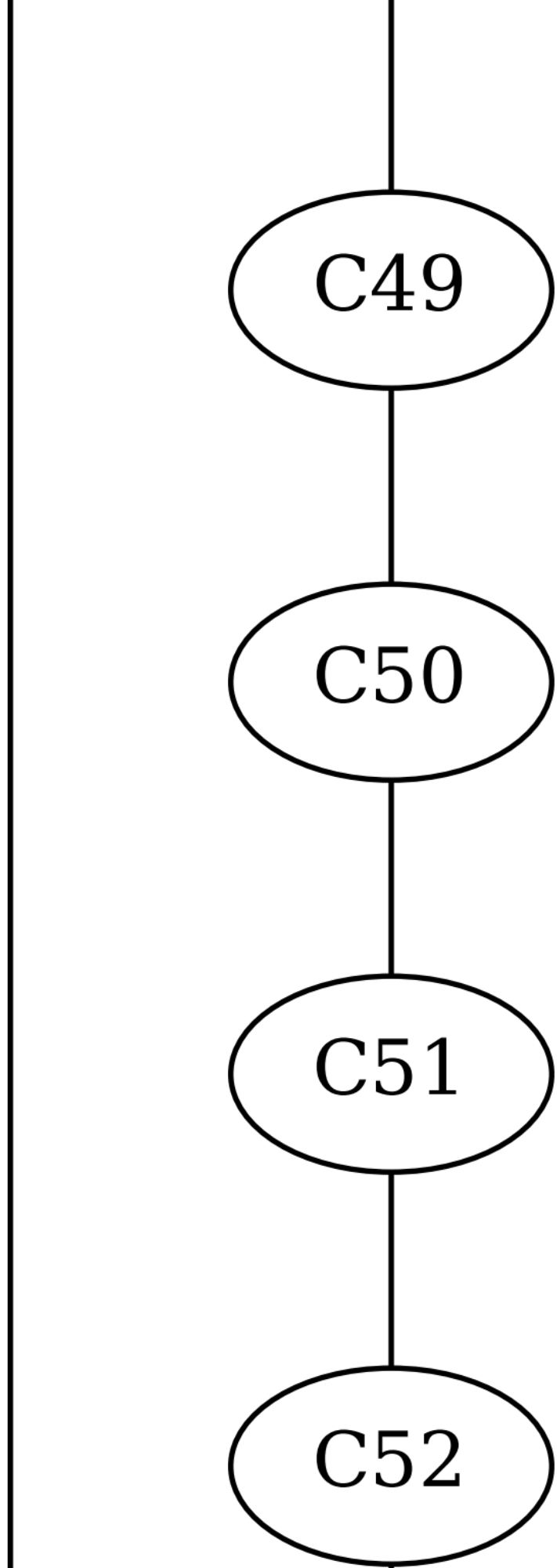
C49
C50
C51
C52

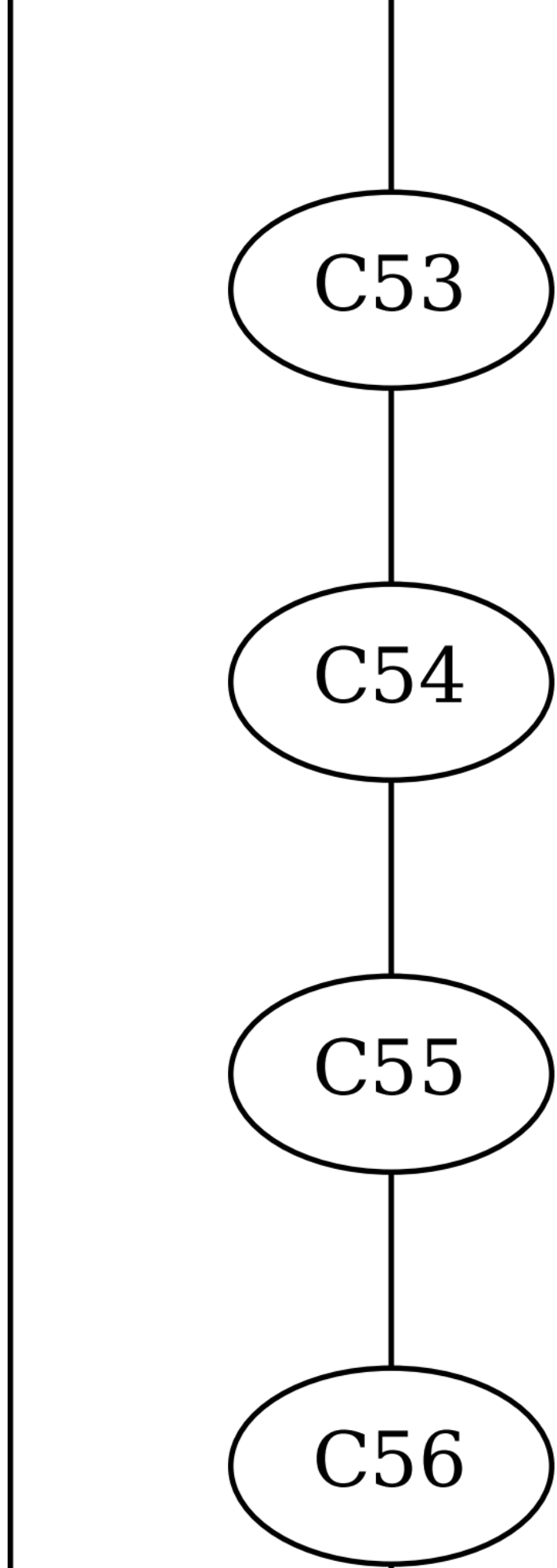
C53
C54
C55
C56

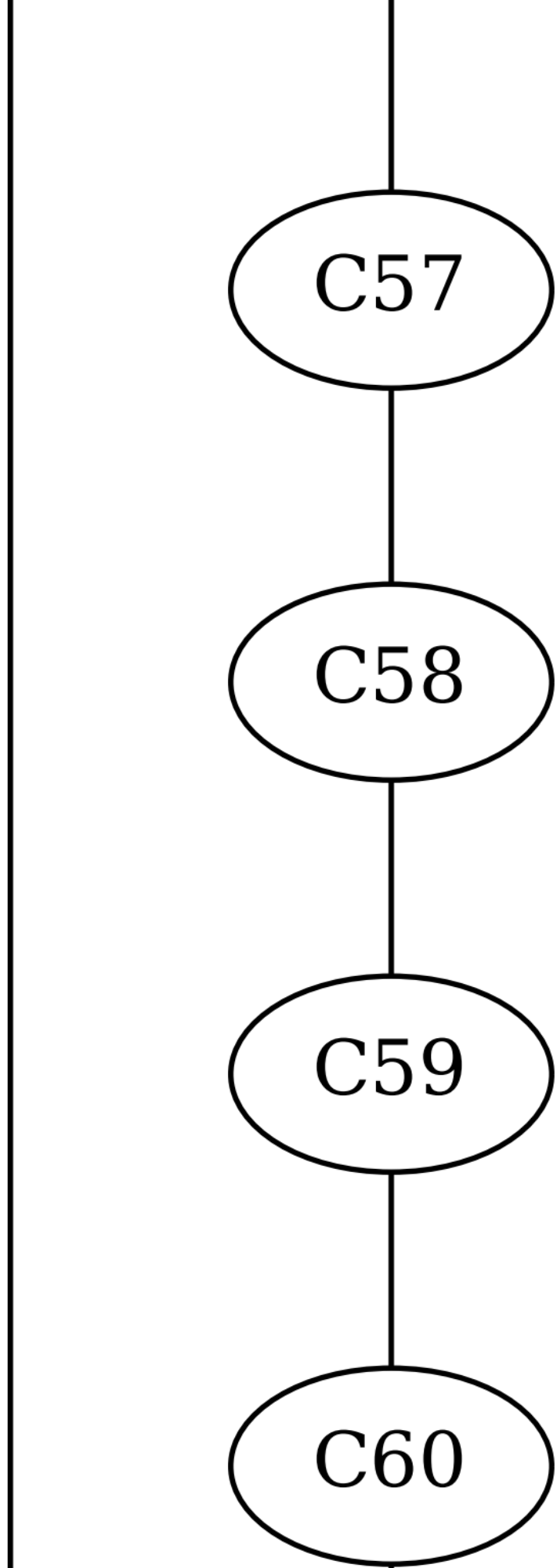
C57
C58
C59
C60

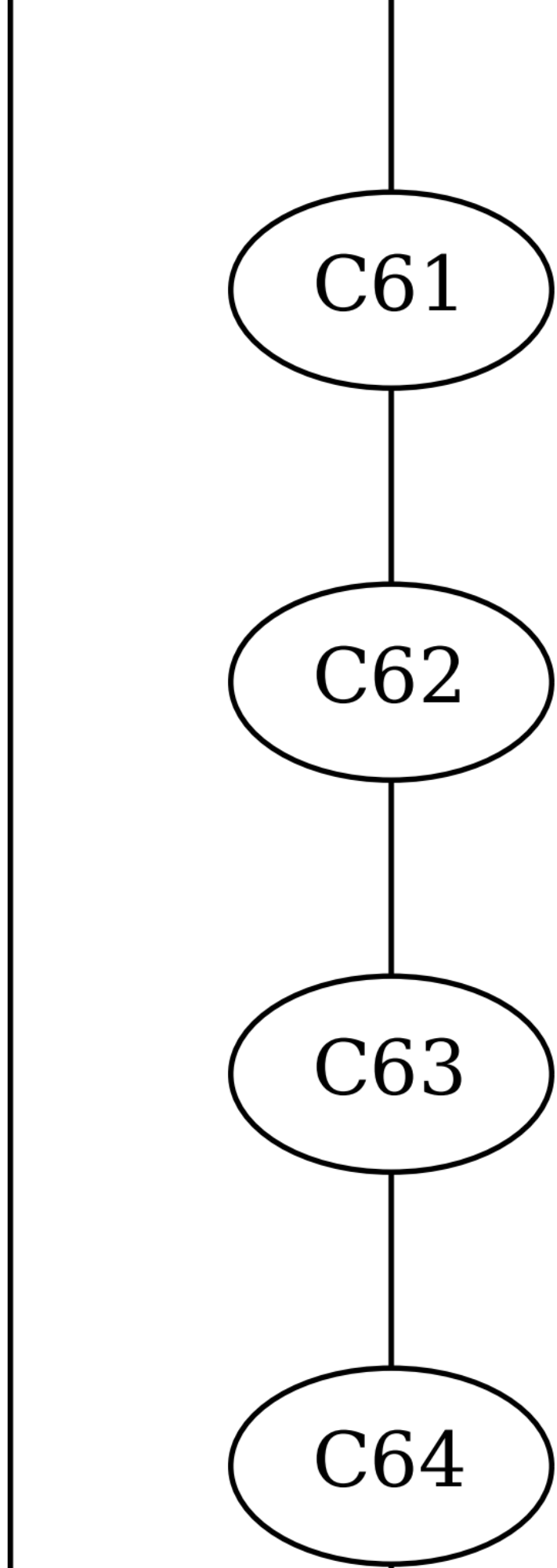
C61
C62
C63
C64

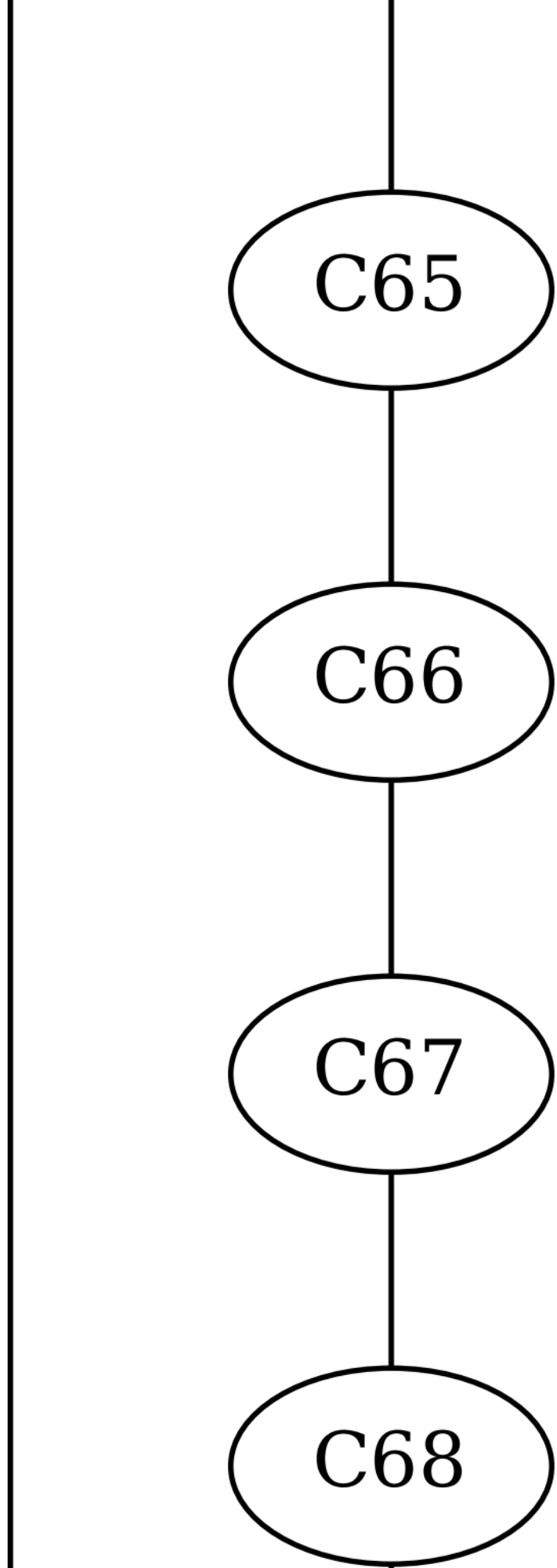
C65
C66
C67
C68

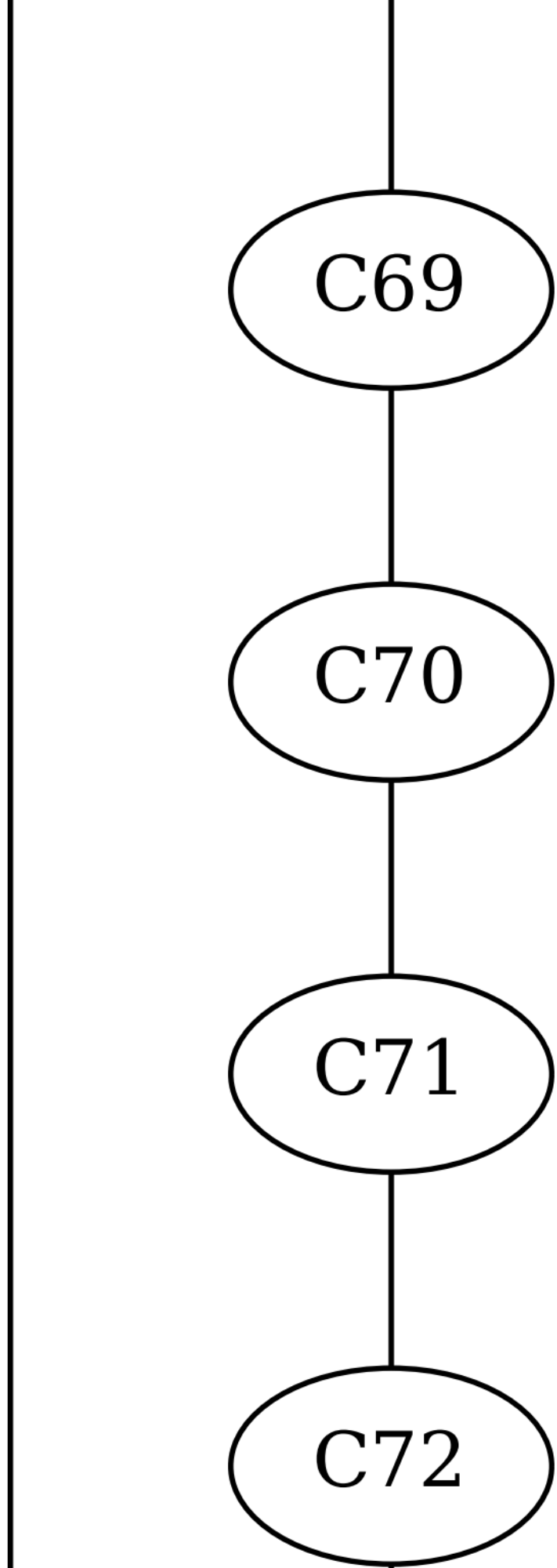
C69
C70
C71
C72

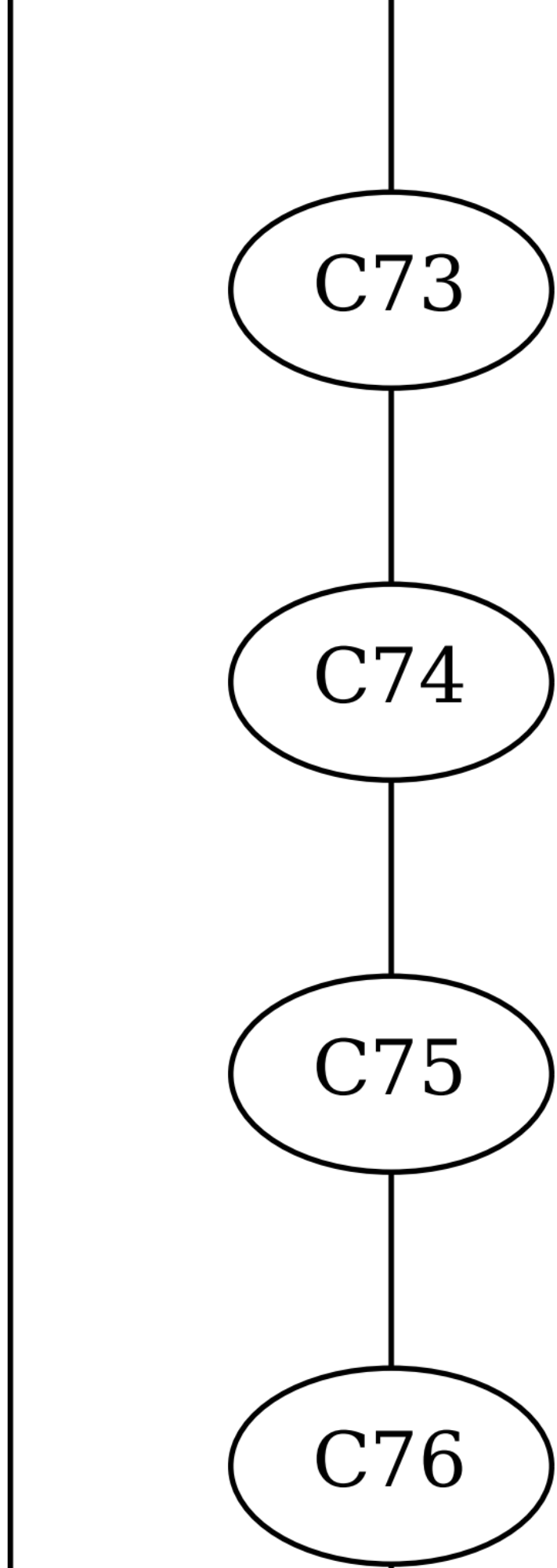
C73
C74
C75
C76

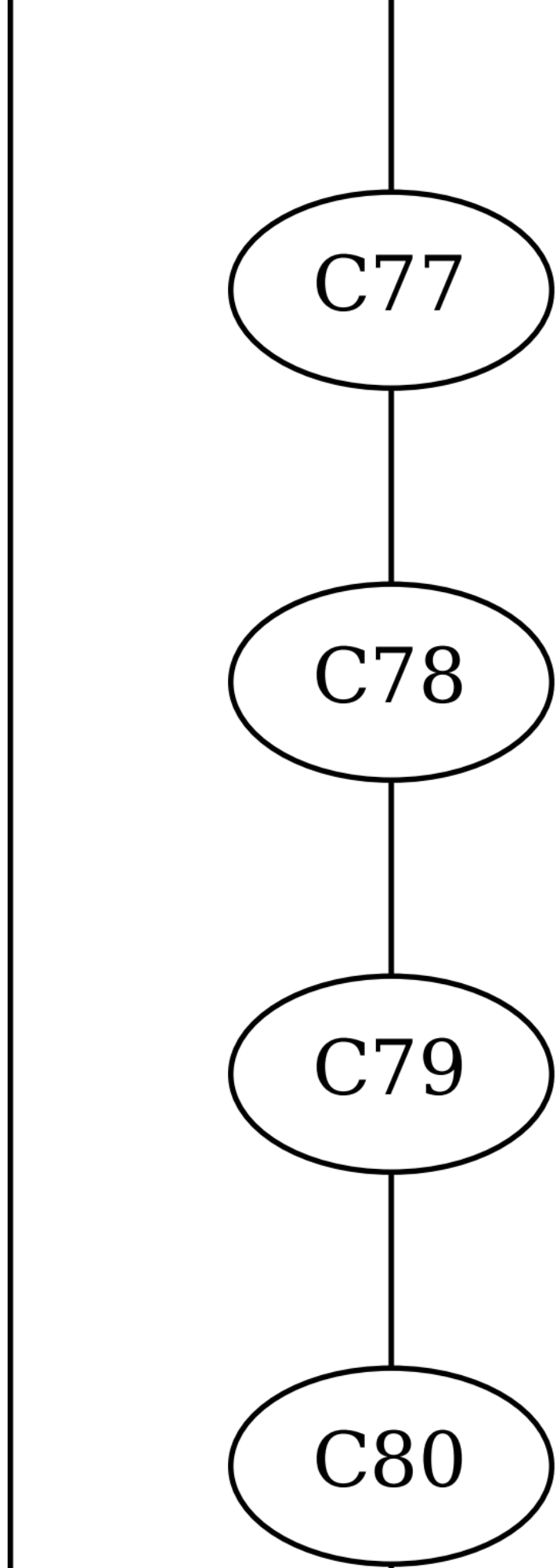
C77
C78
C79
C80

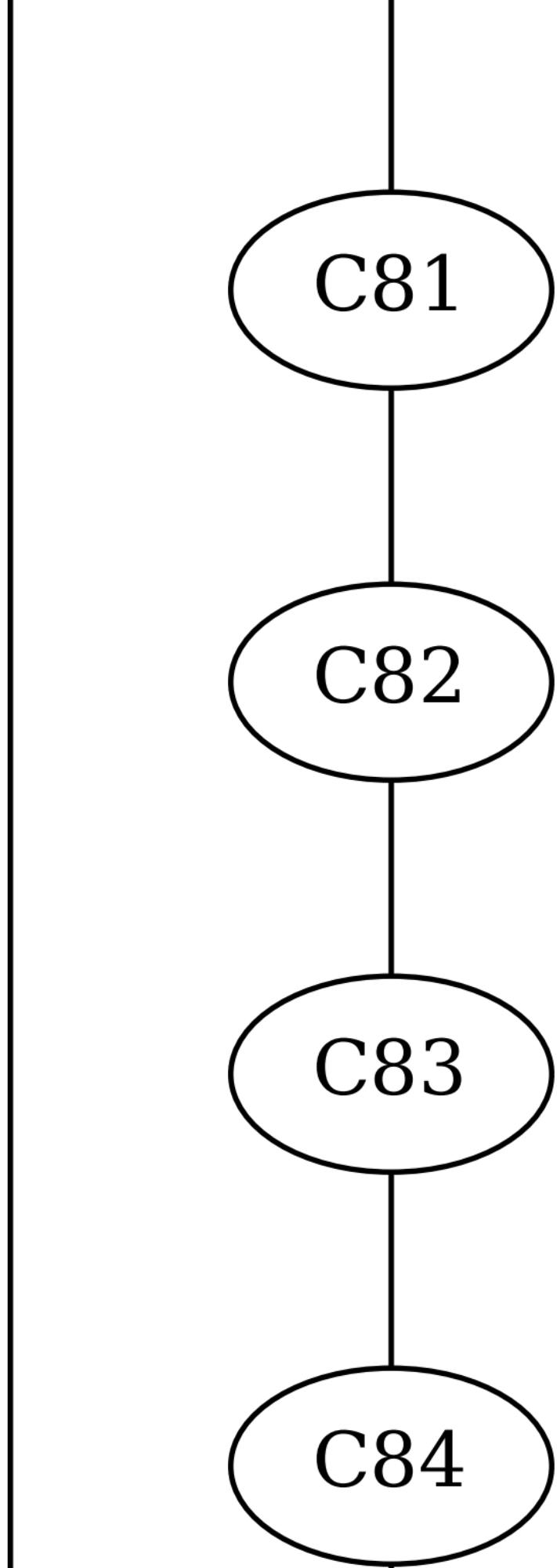
C81
C82
C83
C84

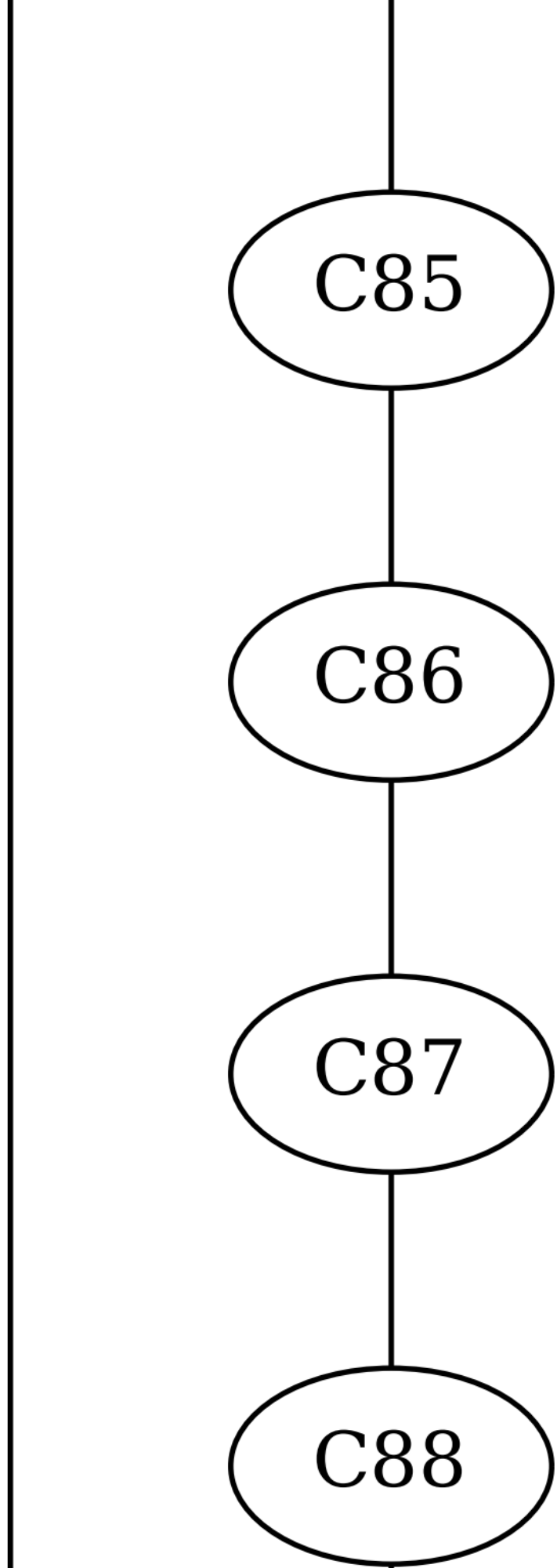
C85
C86
C87
C88

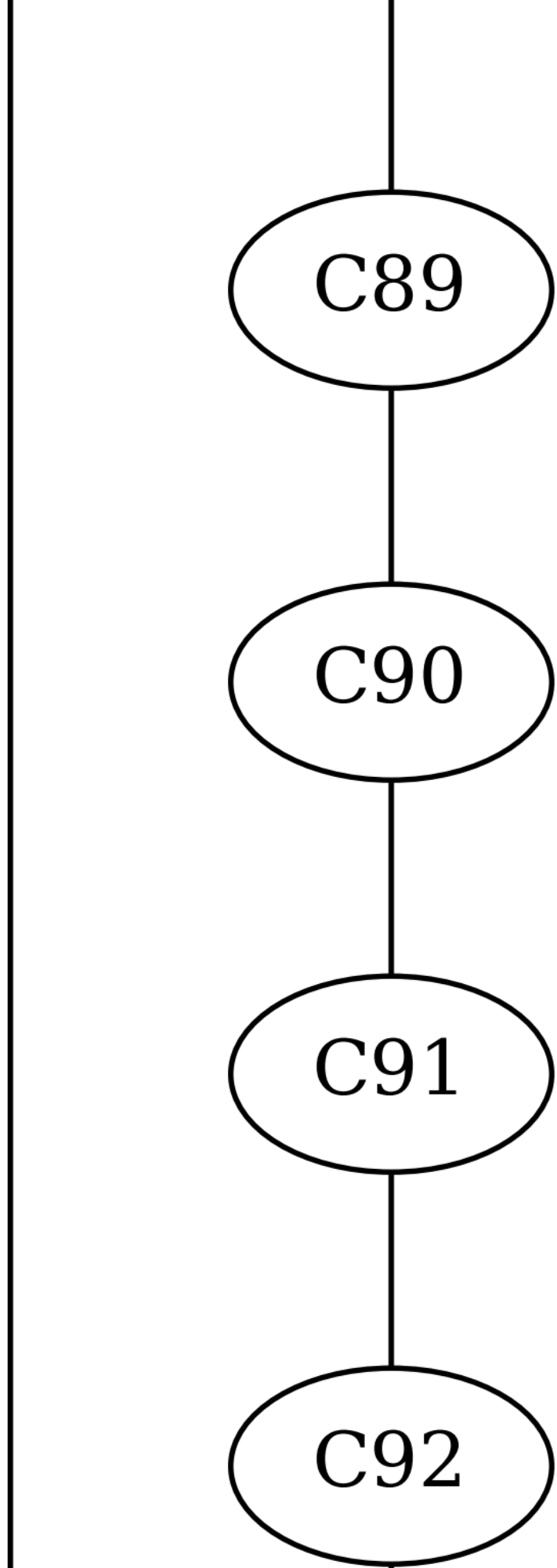
C89
C90
C91
C92

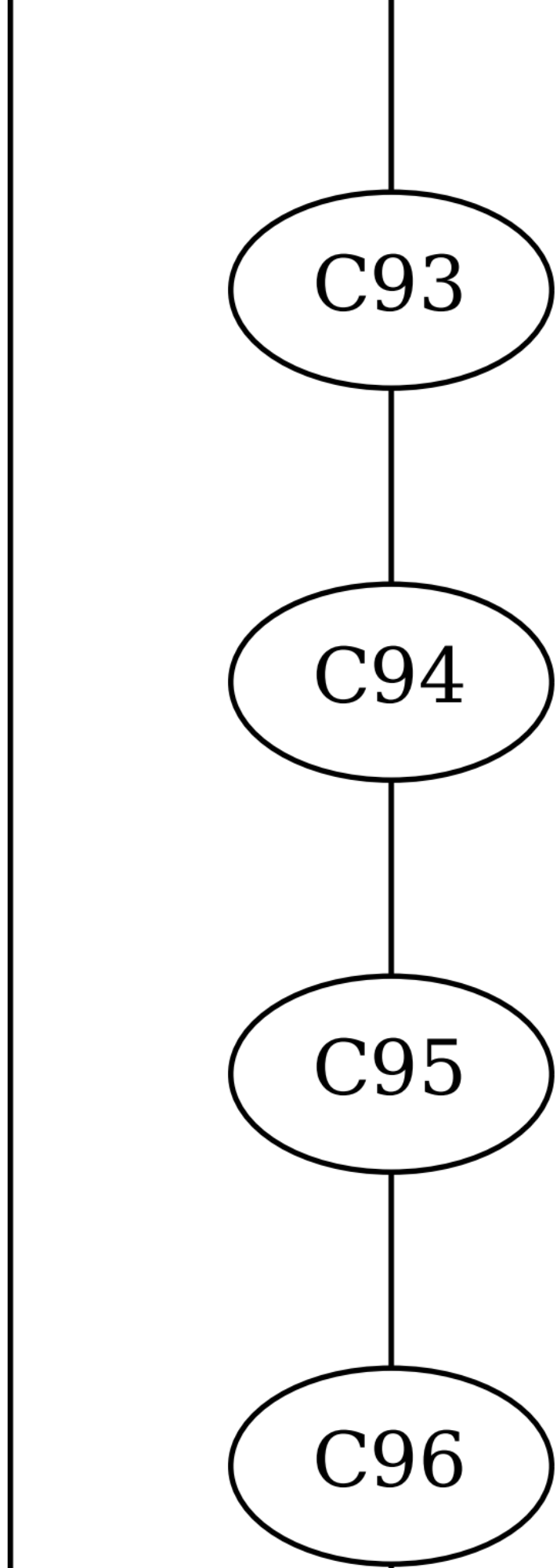
C93
C94
C95
C96

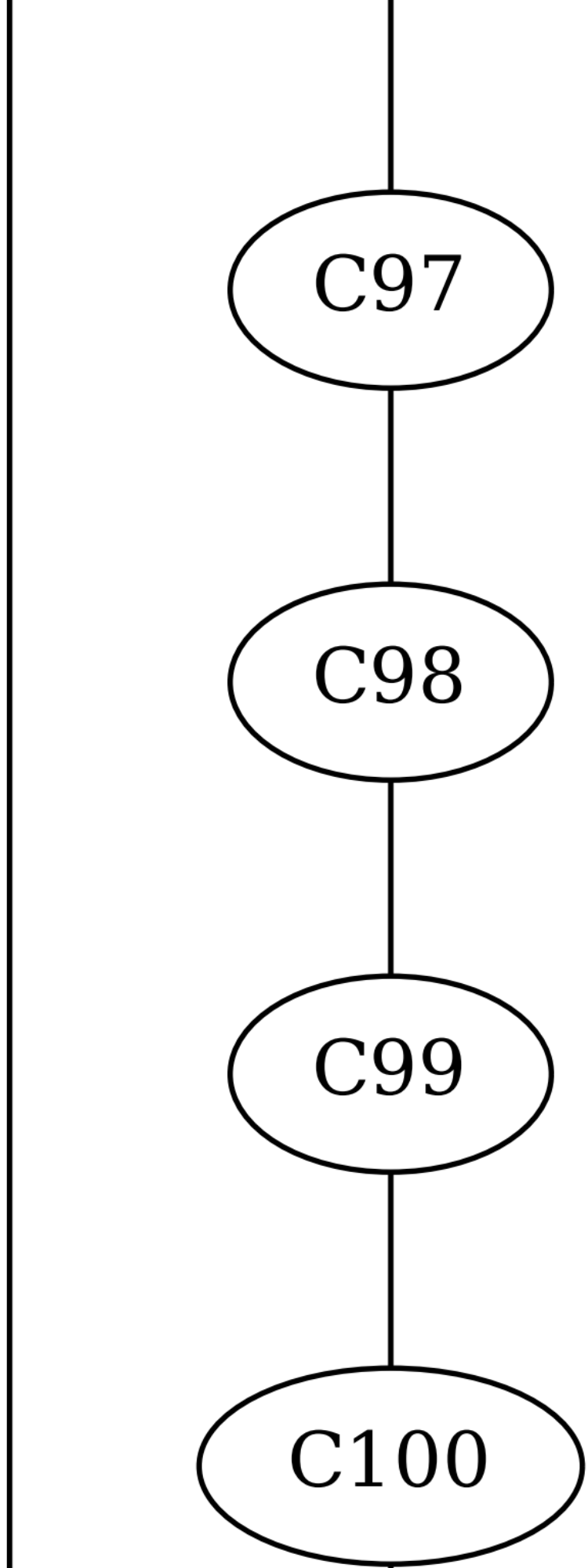
C97
C98
C99
C100

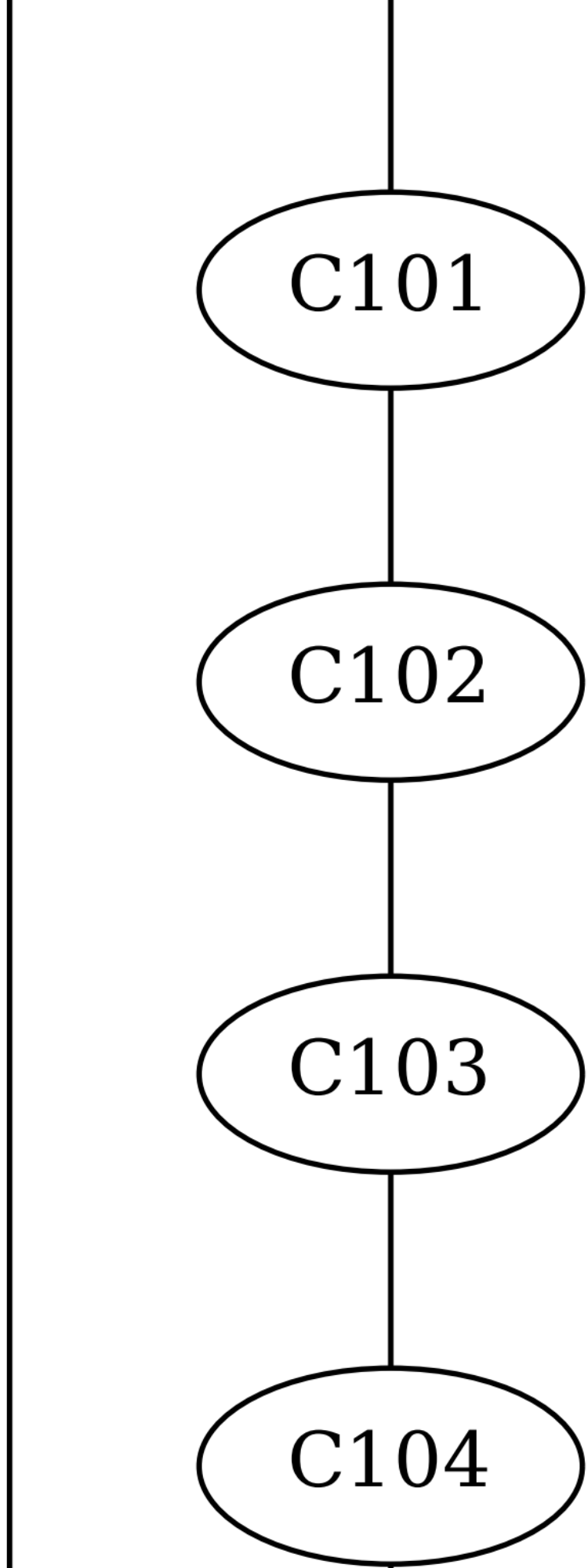
C101
C102
C103
C104

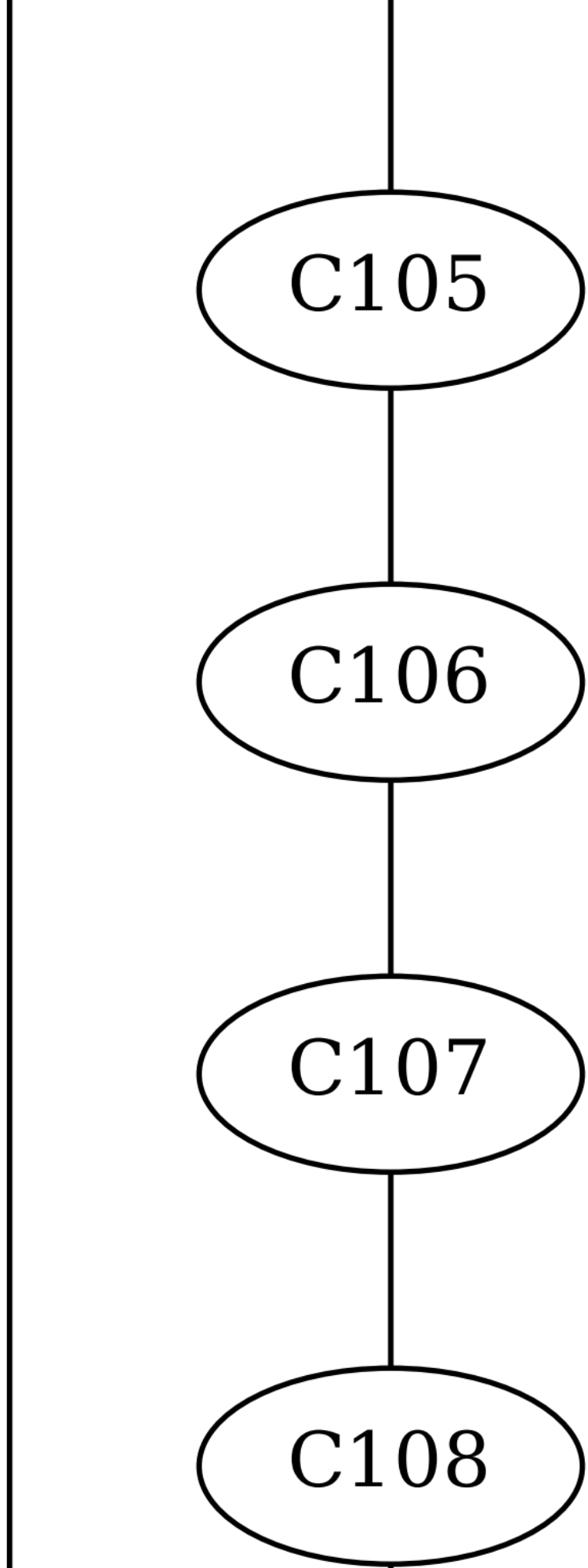
C105
C106
C107
C108

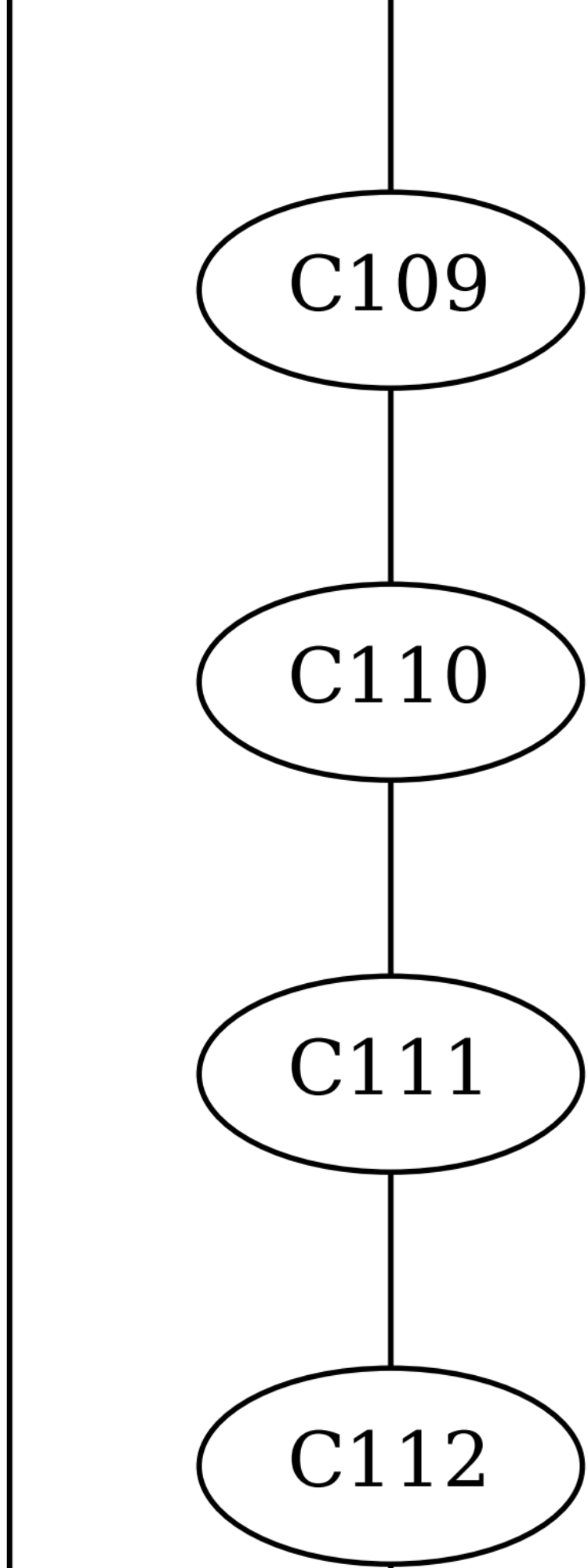
C109
C110
C111
C112

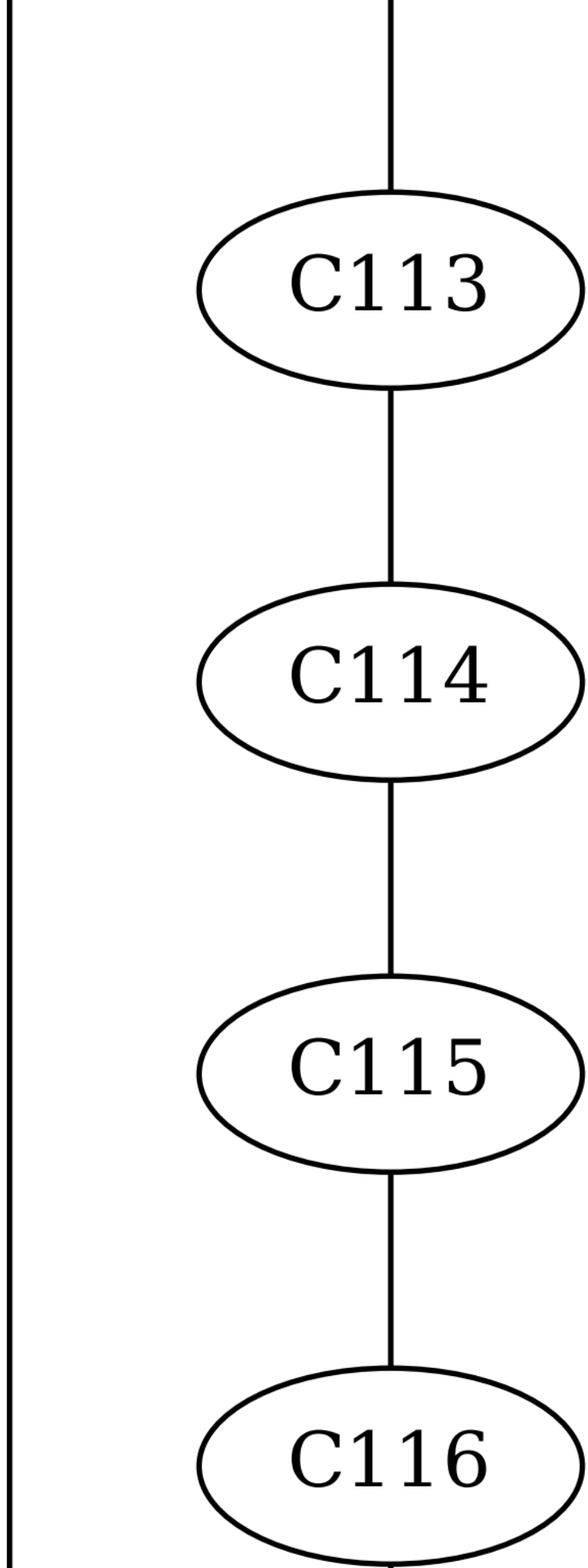
C113
C114
C115
C116

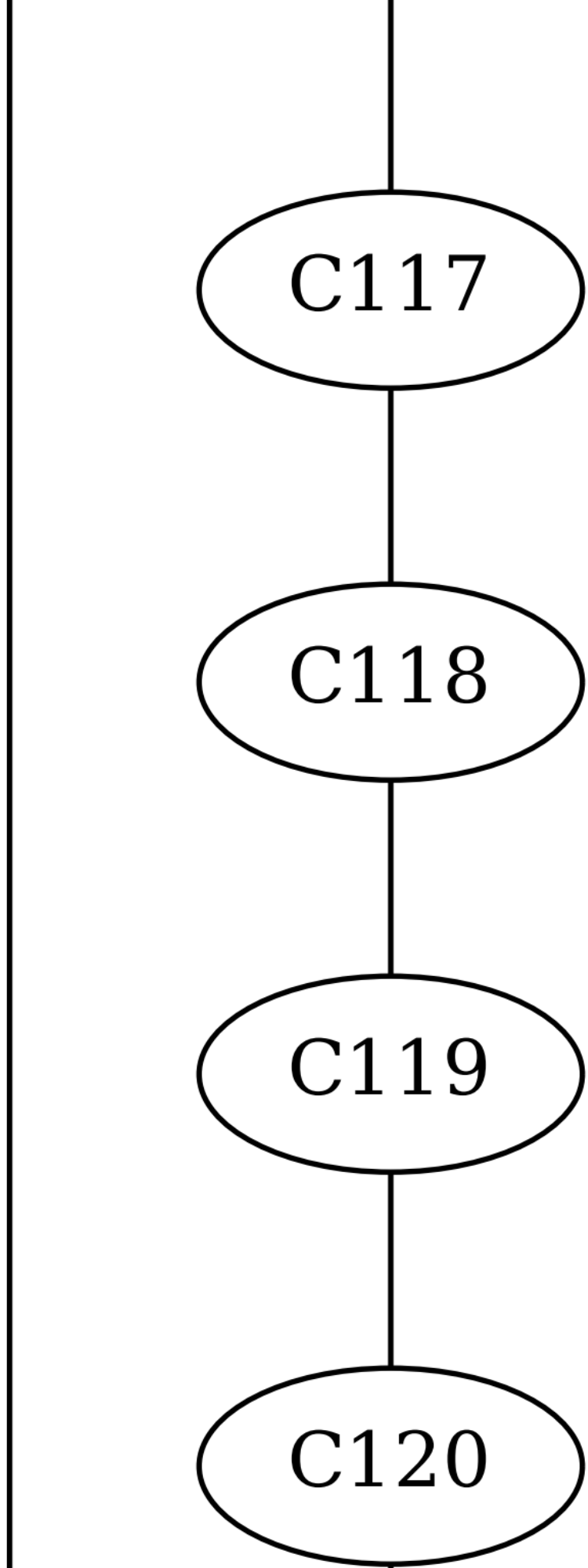
C117
C118
C119
C120

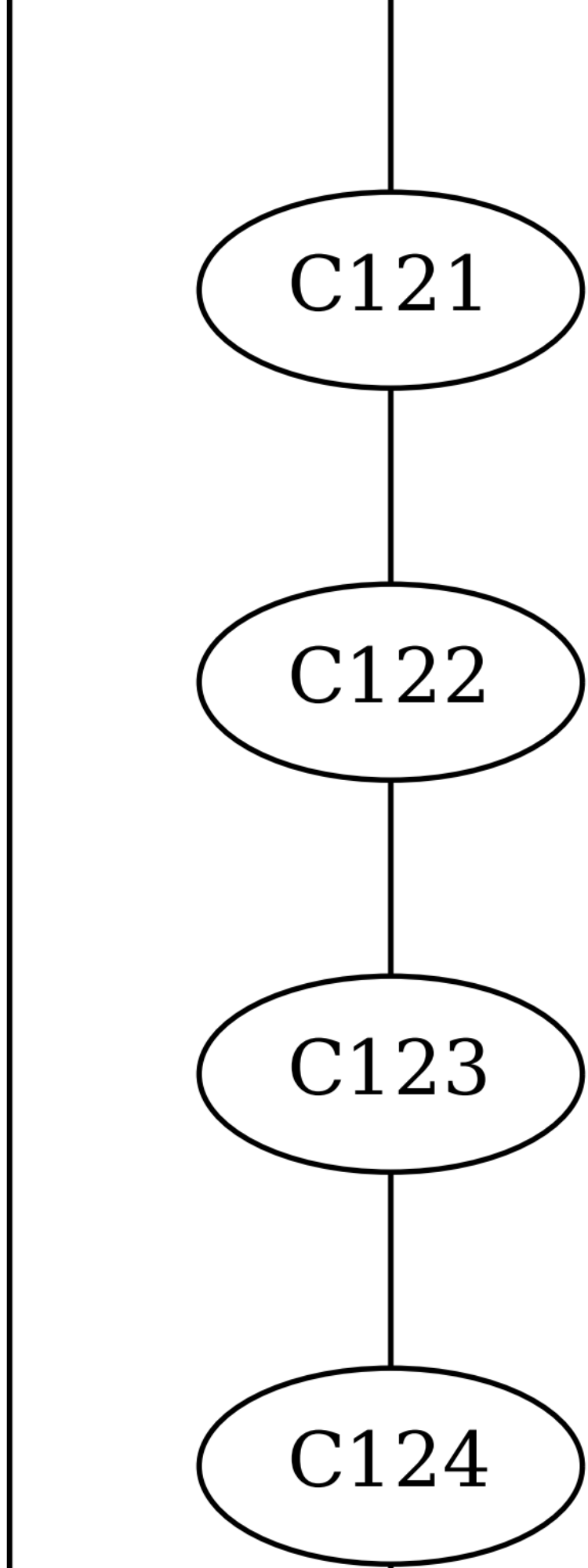
C121
C122
C123
C124

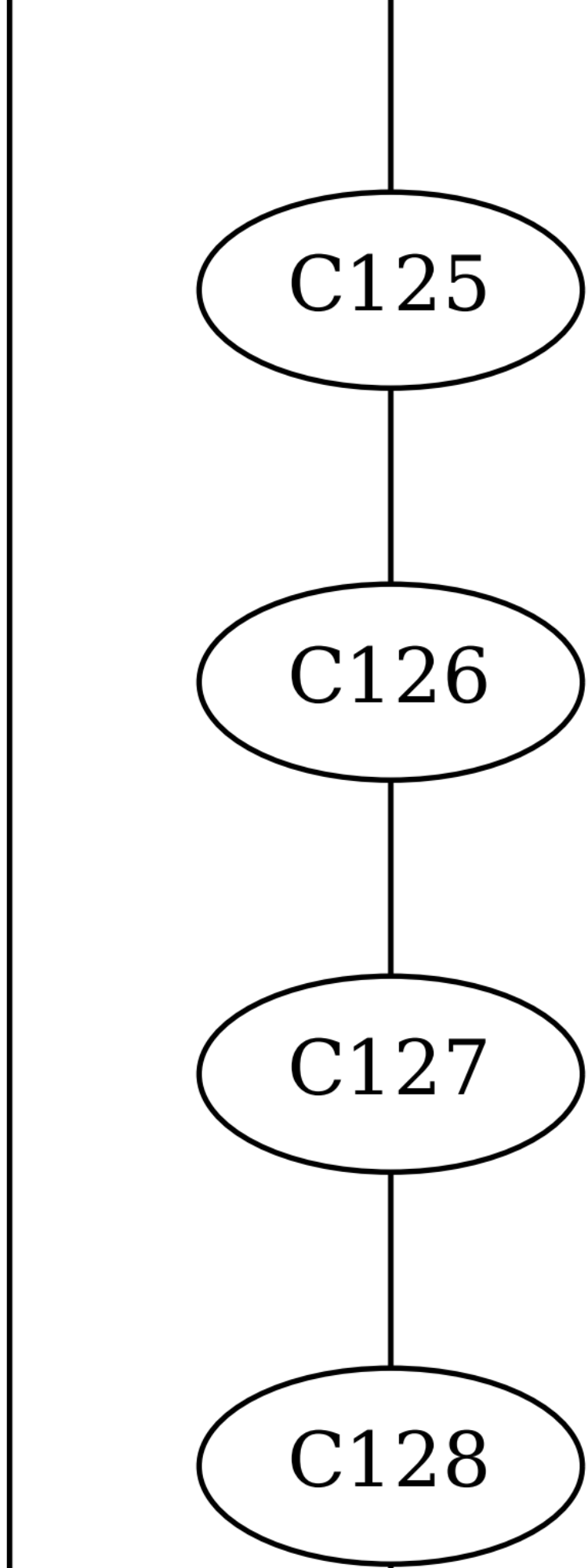
C125
C126
C127
C128

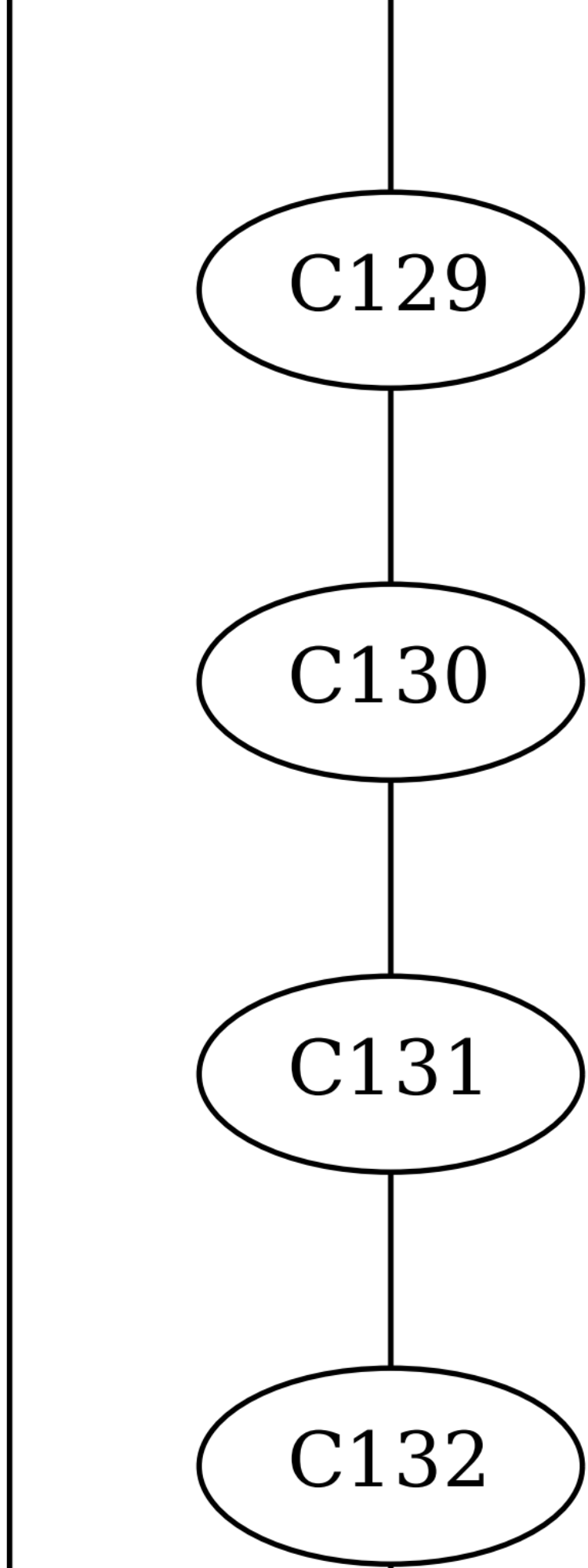
C129
C130
C131
C132

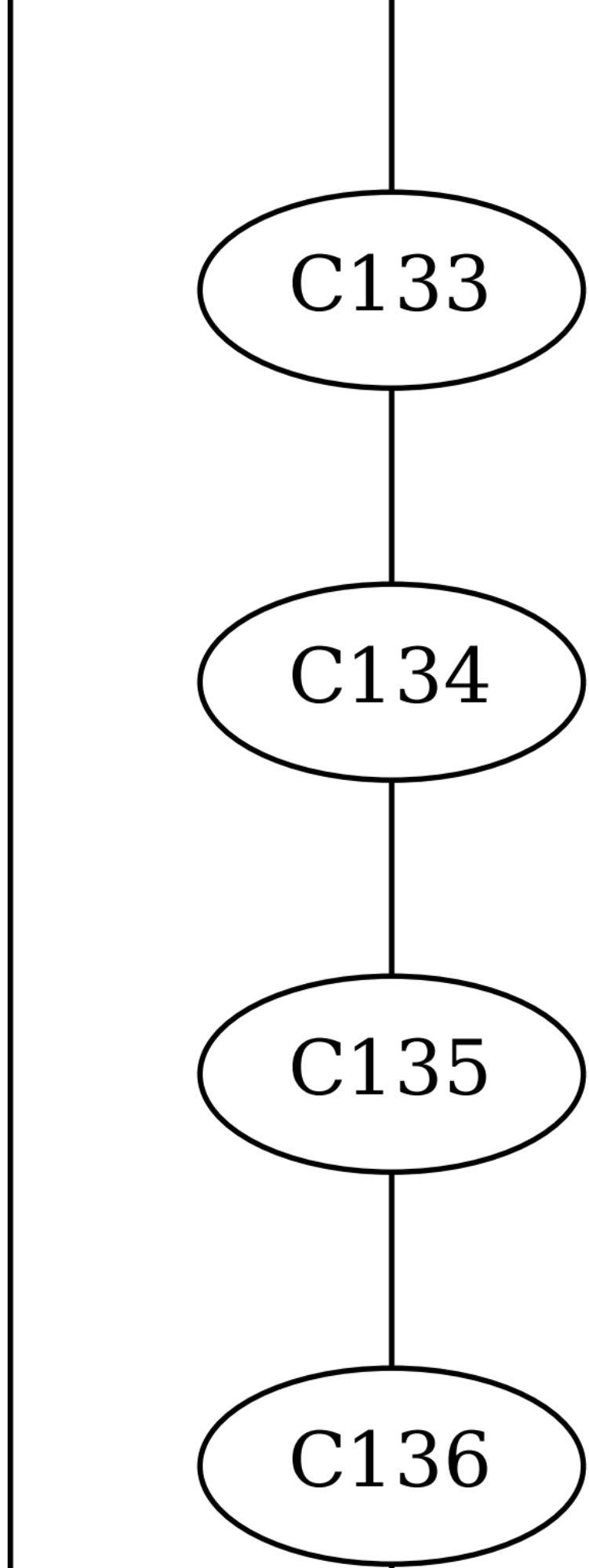
C133
C134
C135
C136

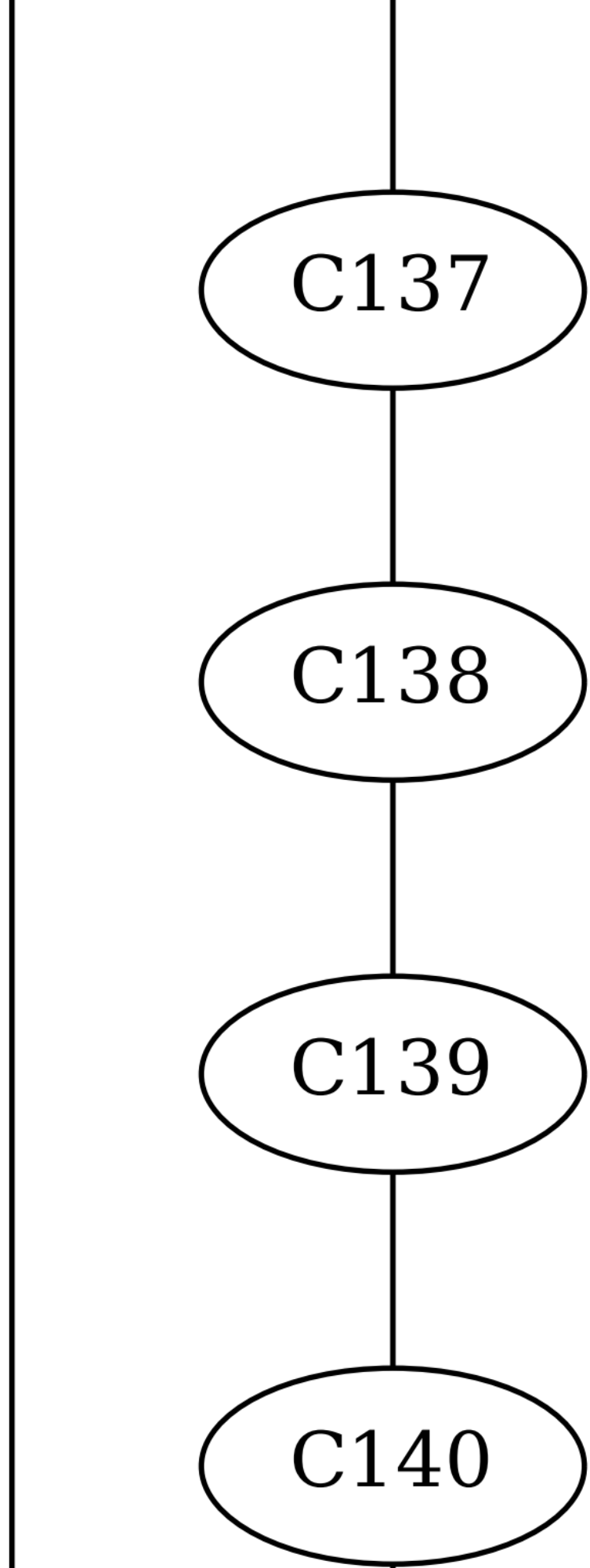
C137
C138
C139
C140

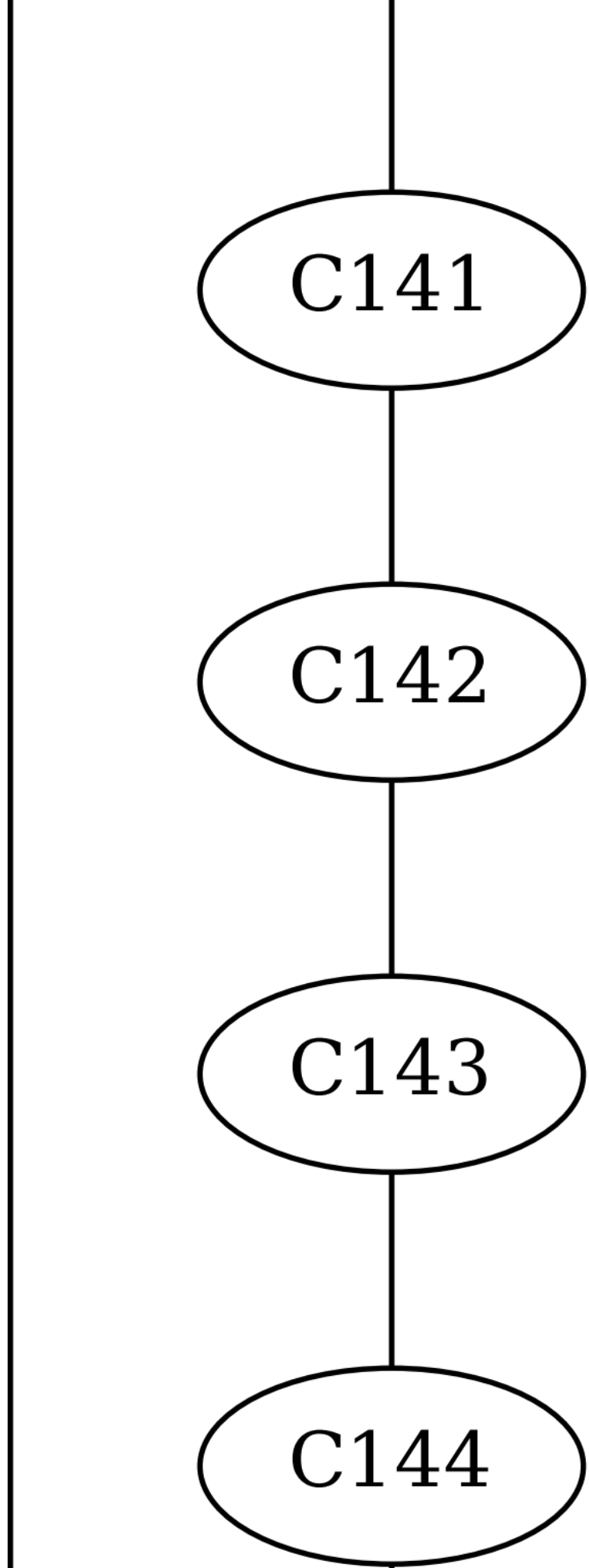
C141
C142
C143
C144

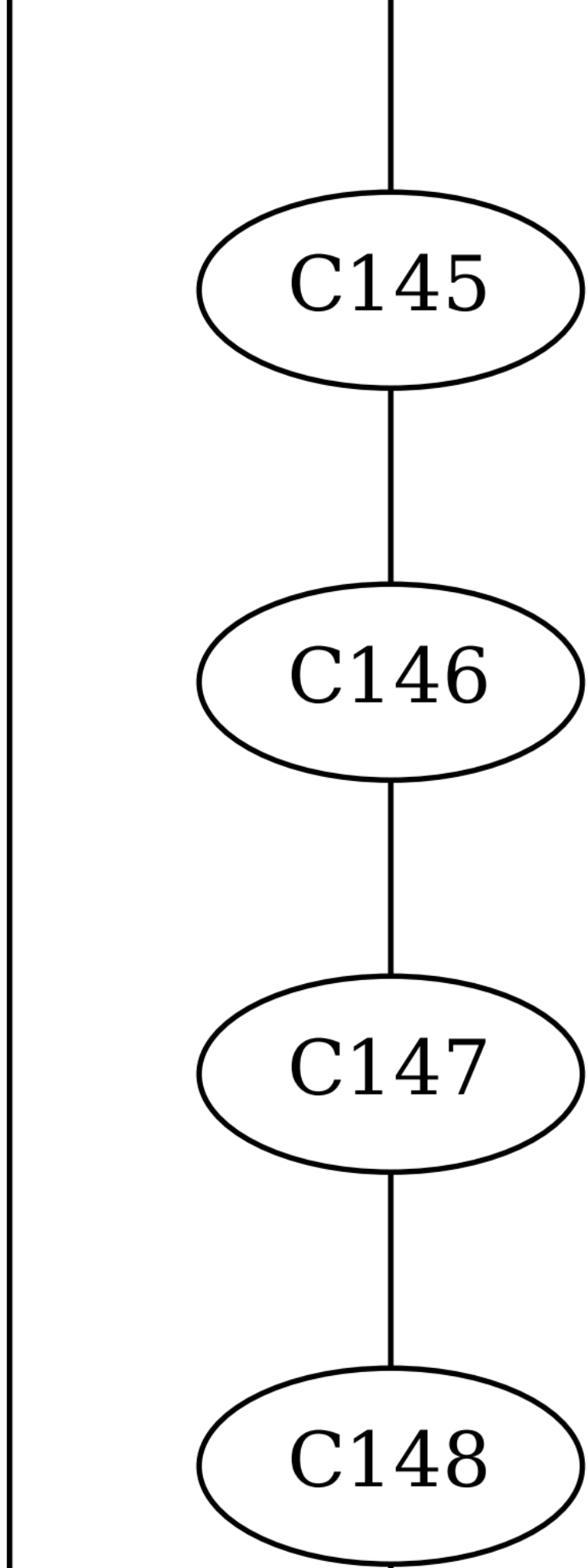
C145
C146
C147
C148

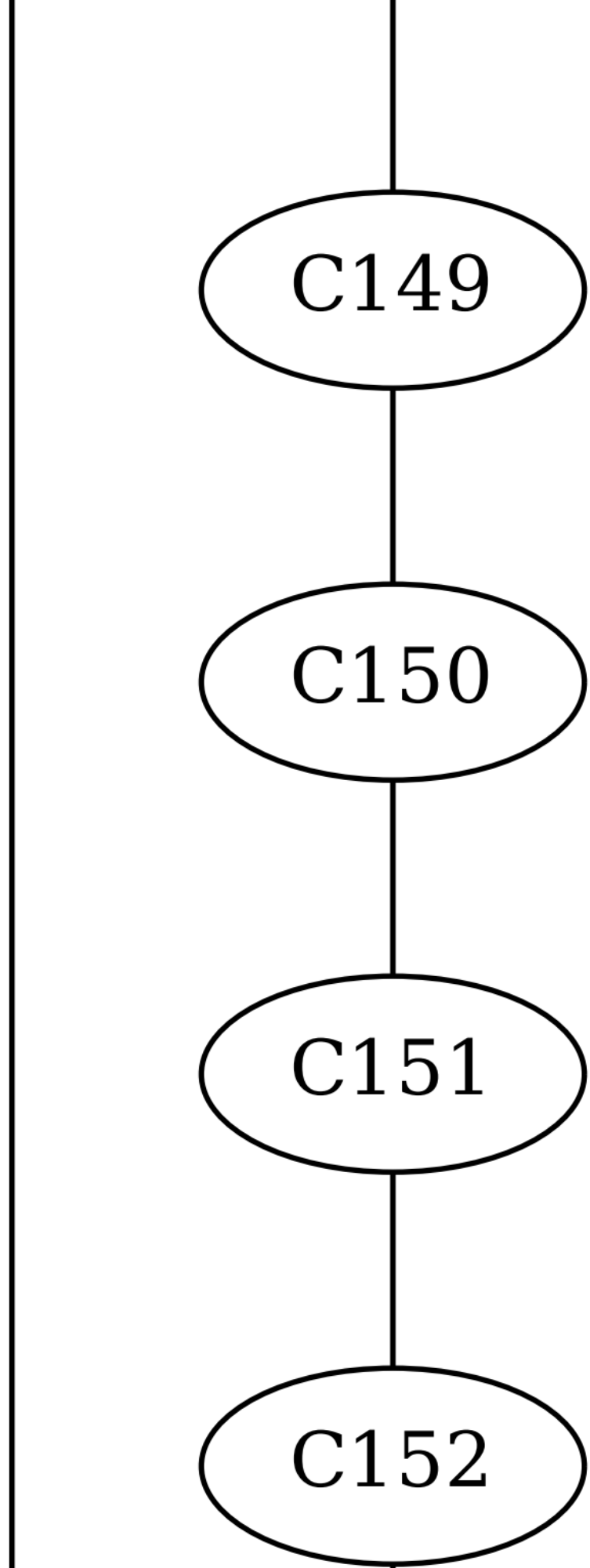
C149
C150
C151
C152

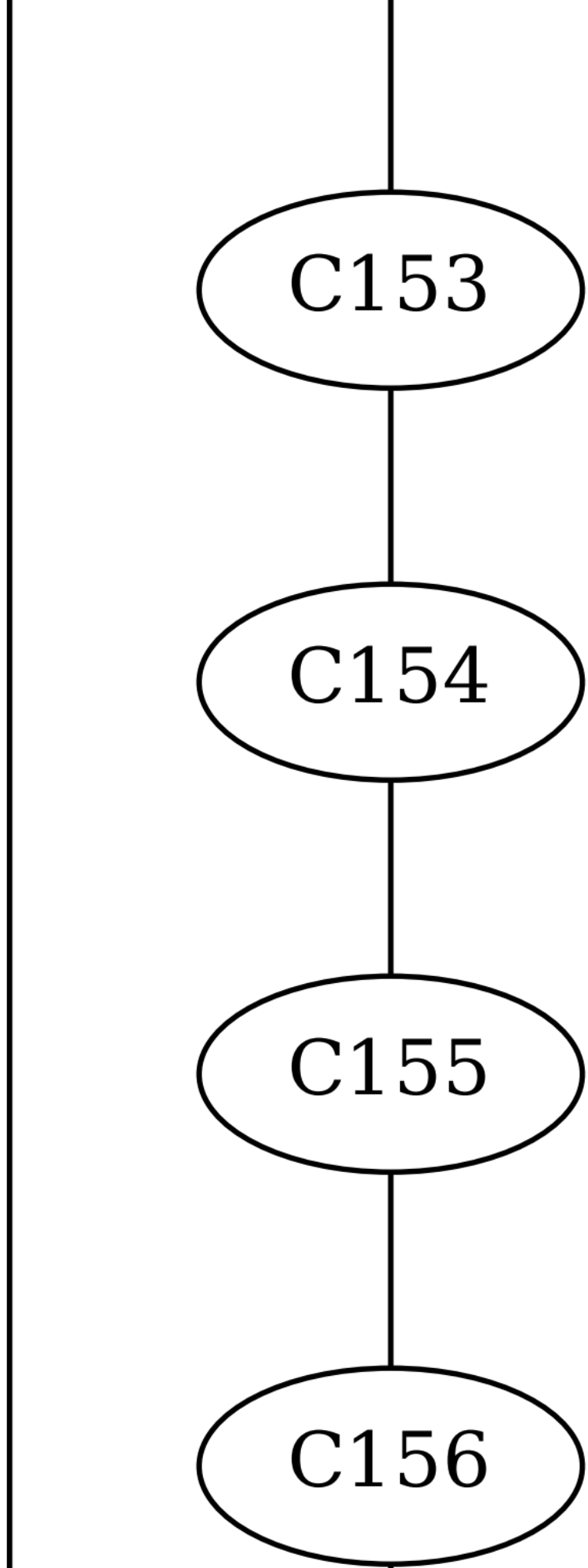
C153
C154
C155
C156

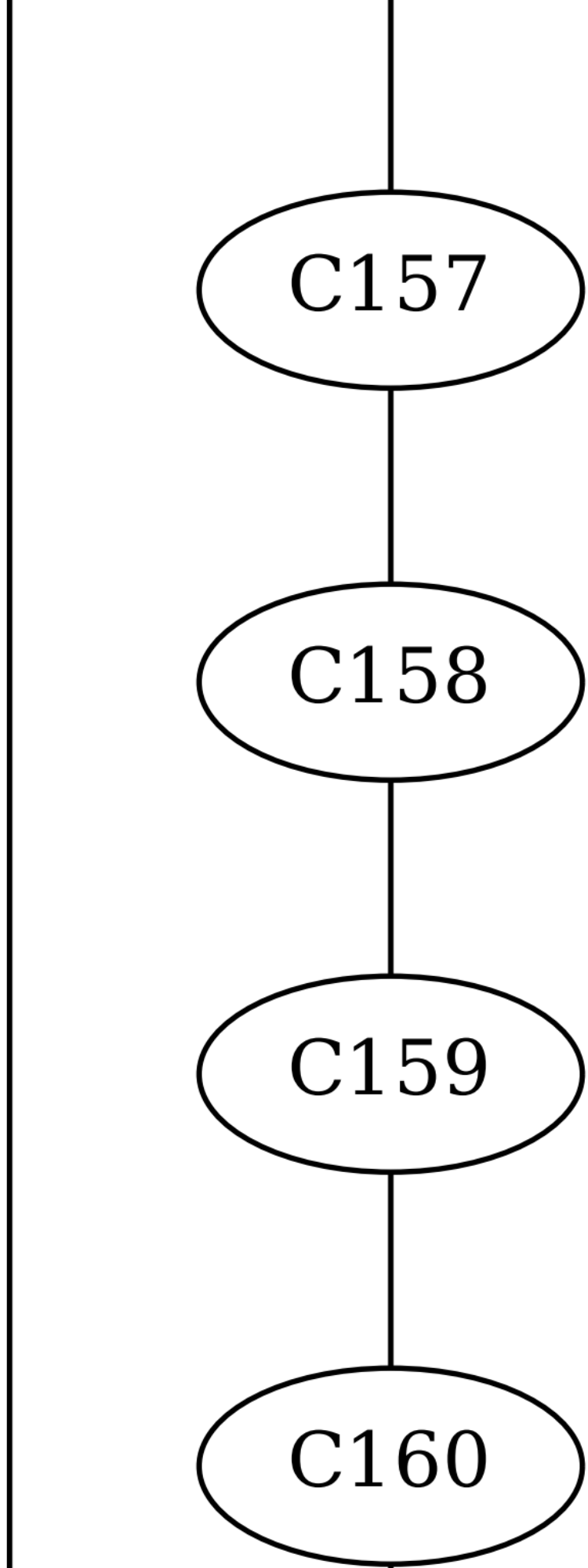
C157
C158
C159
C160

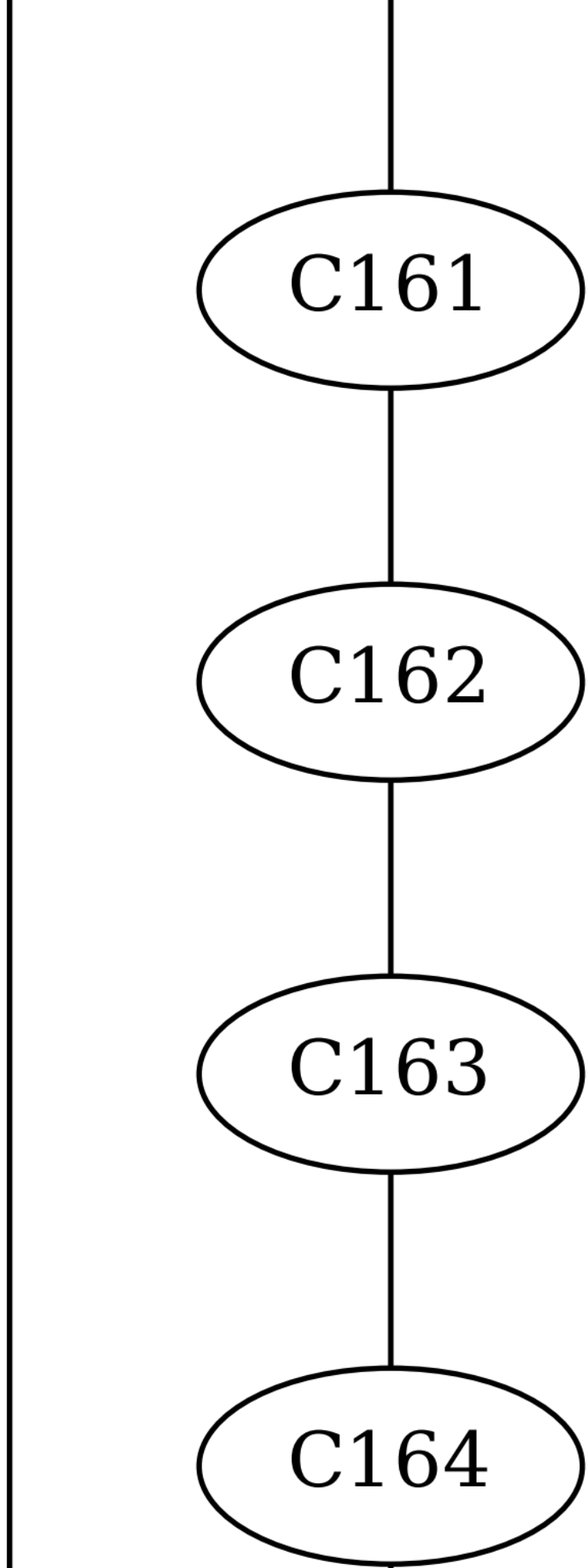
C161
C162
C163
C164

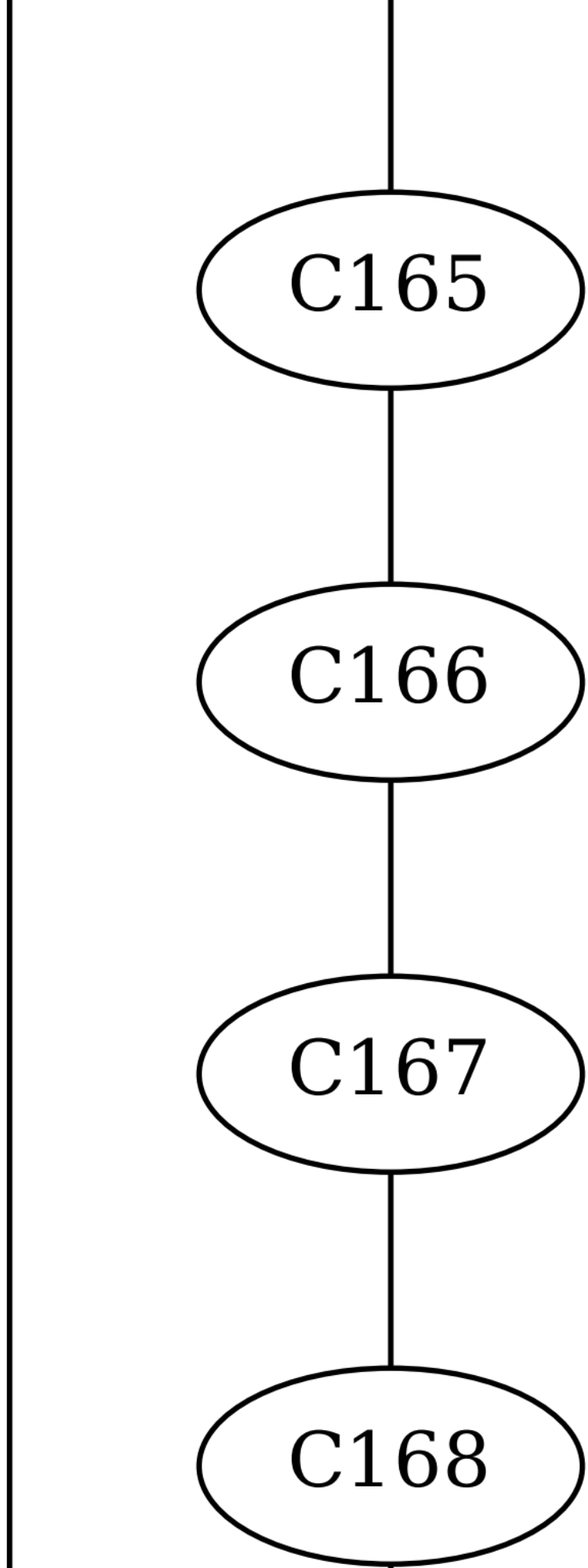
C165
C166
C167
C168

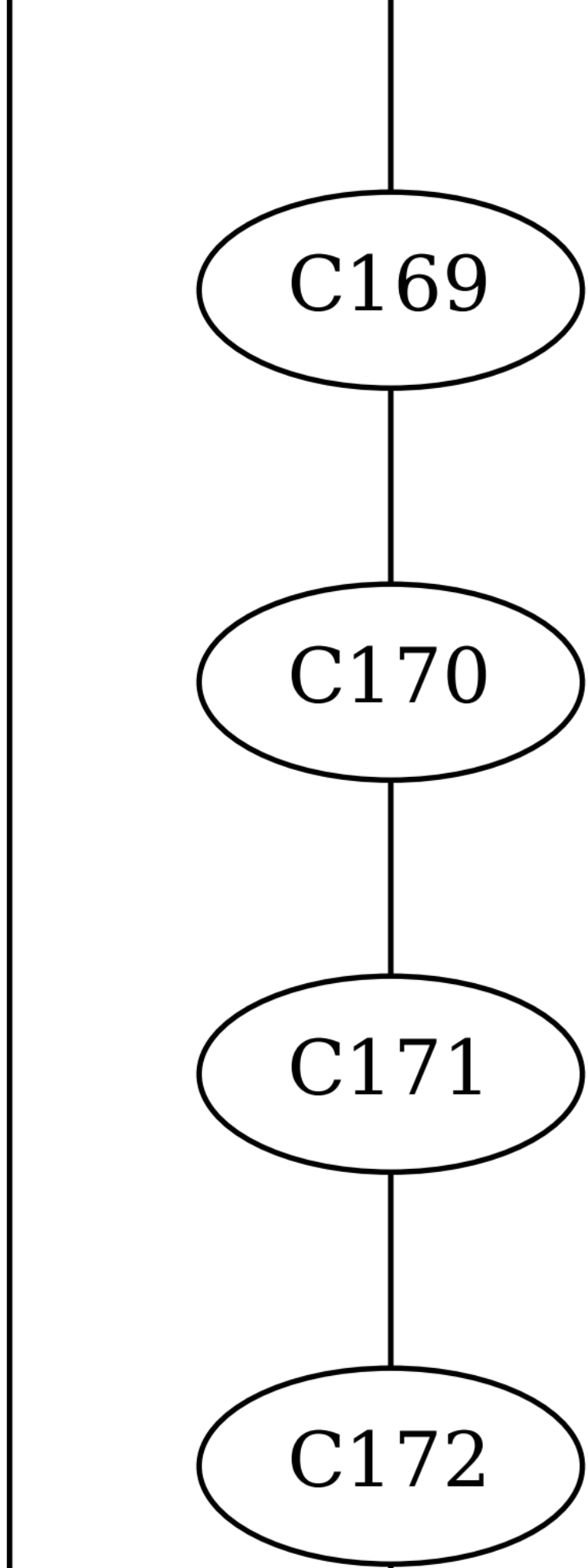
C169
C170
C171
C172

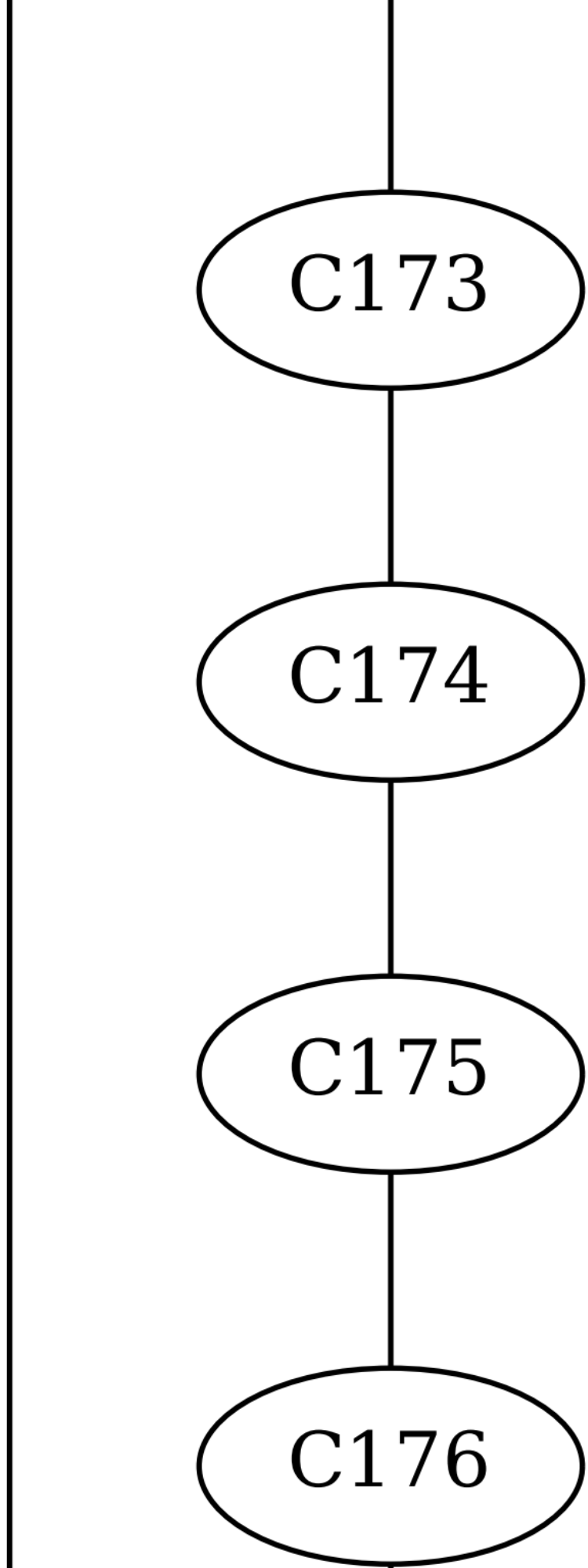
C173
C174
C175
C176

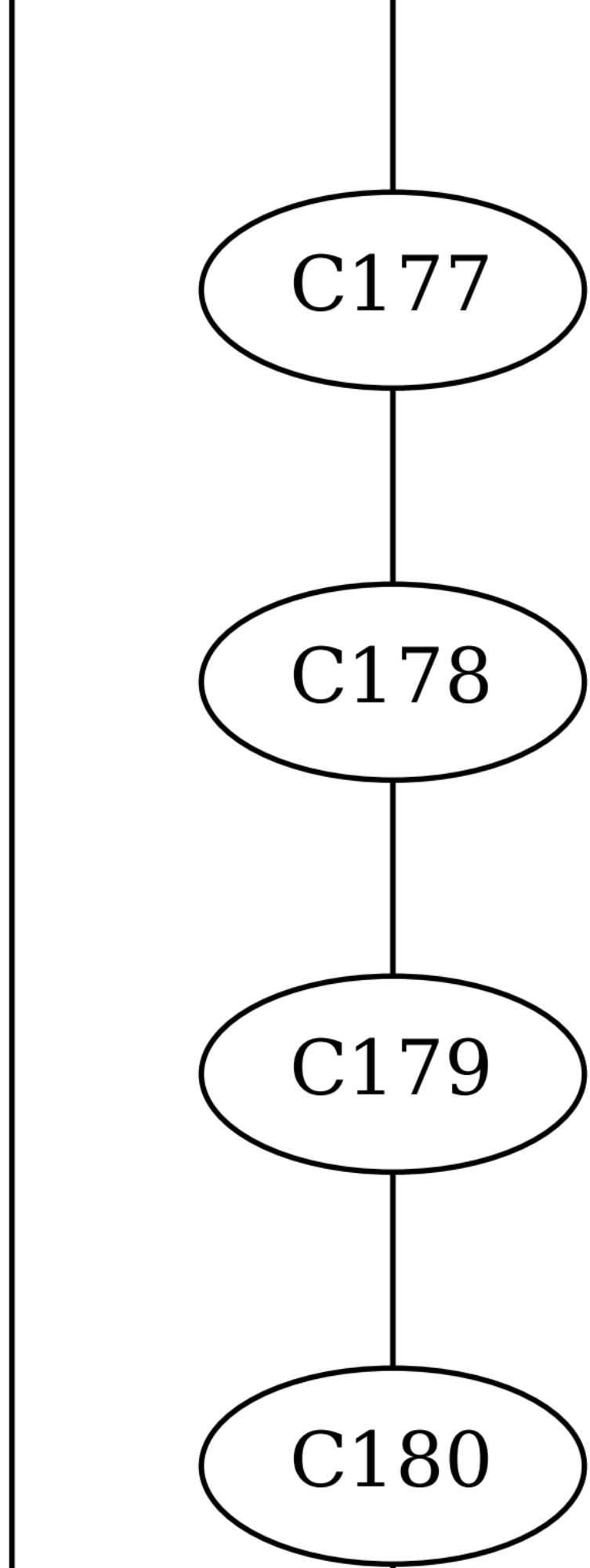
C177
C178
C179
C180

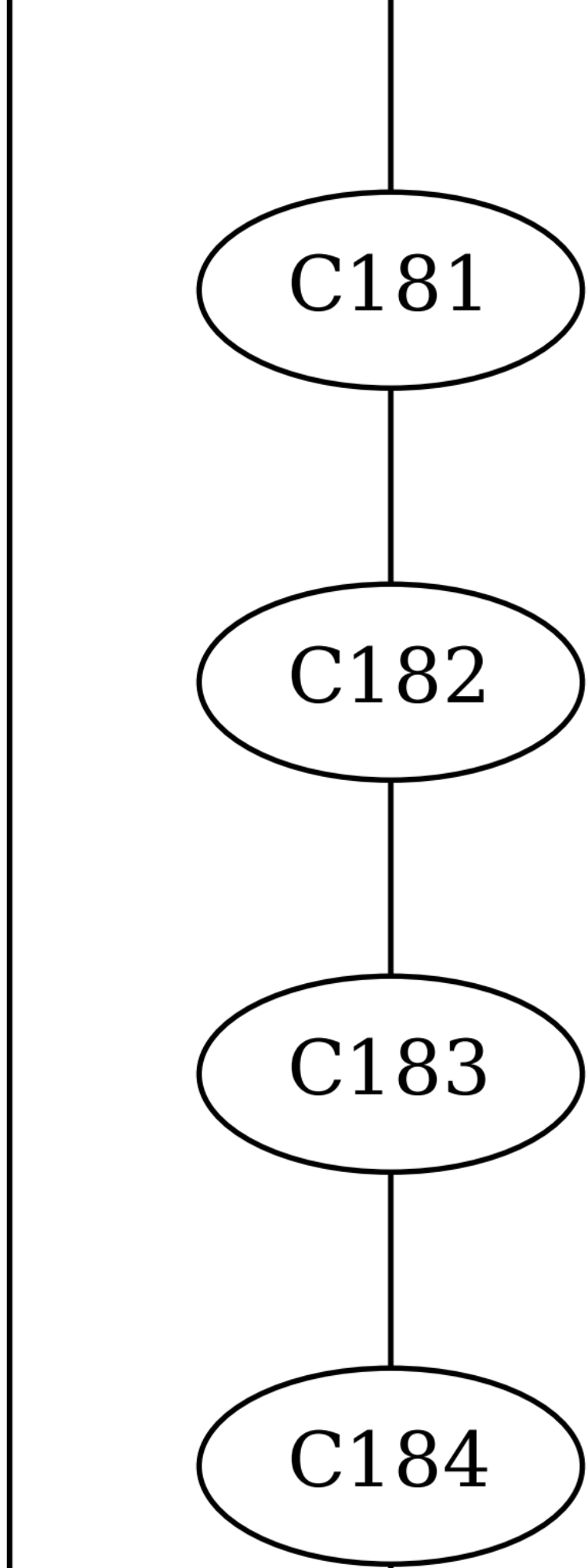
C181
C182
C183
C184

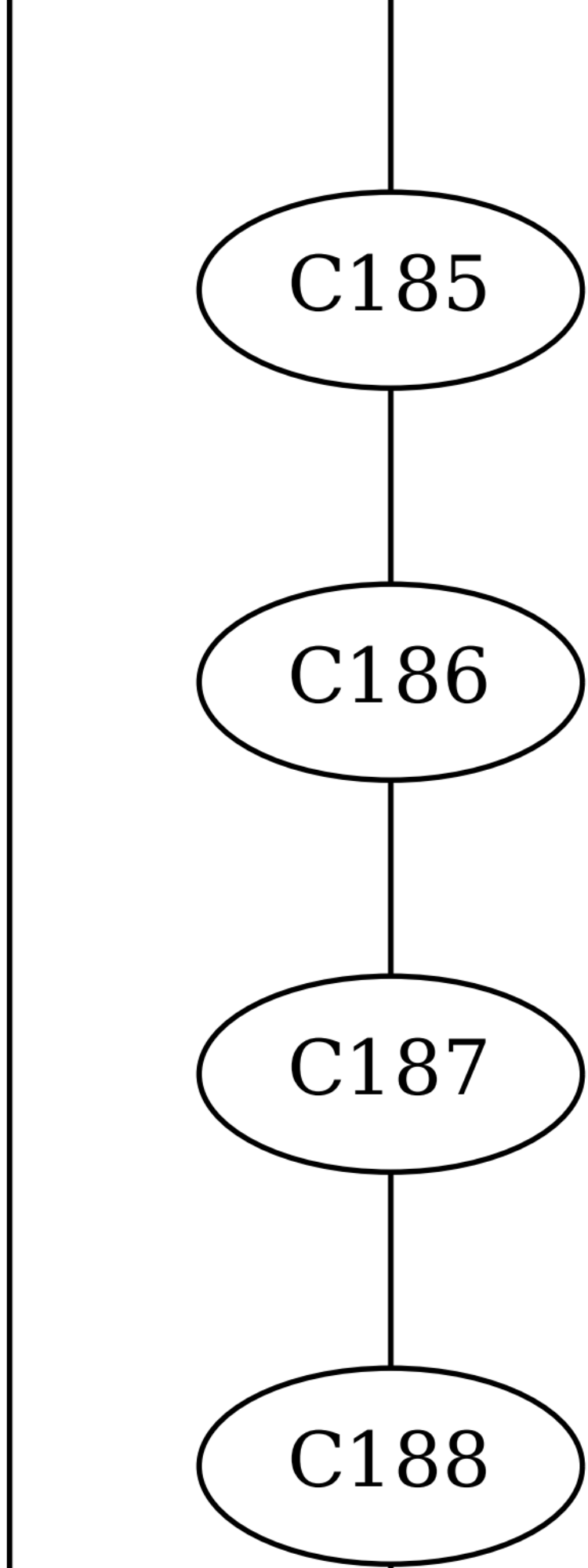
C185
C186
C187
C188

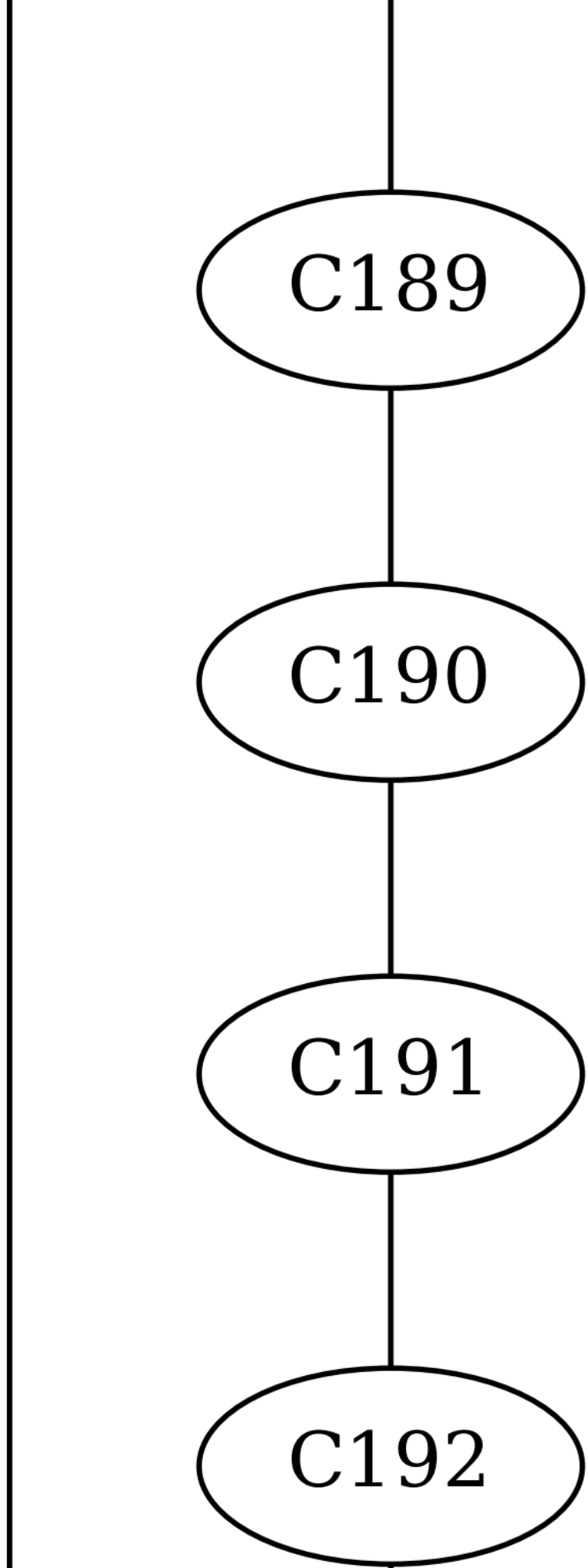
C189
C190
C191
C192

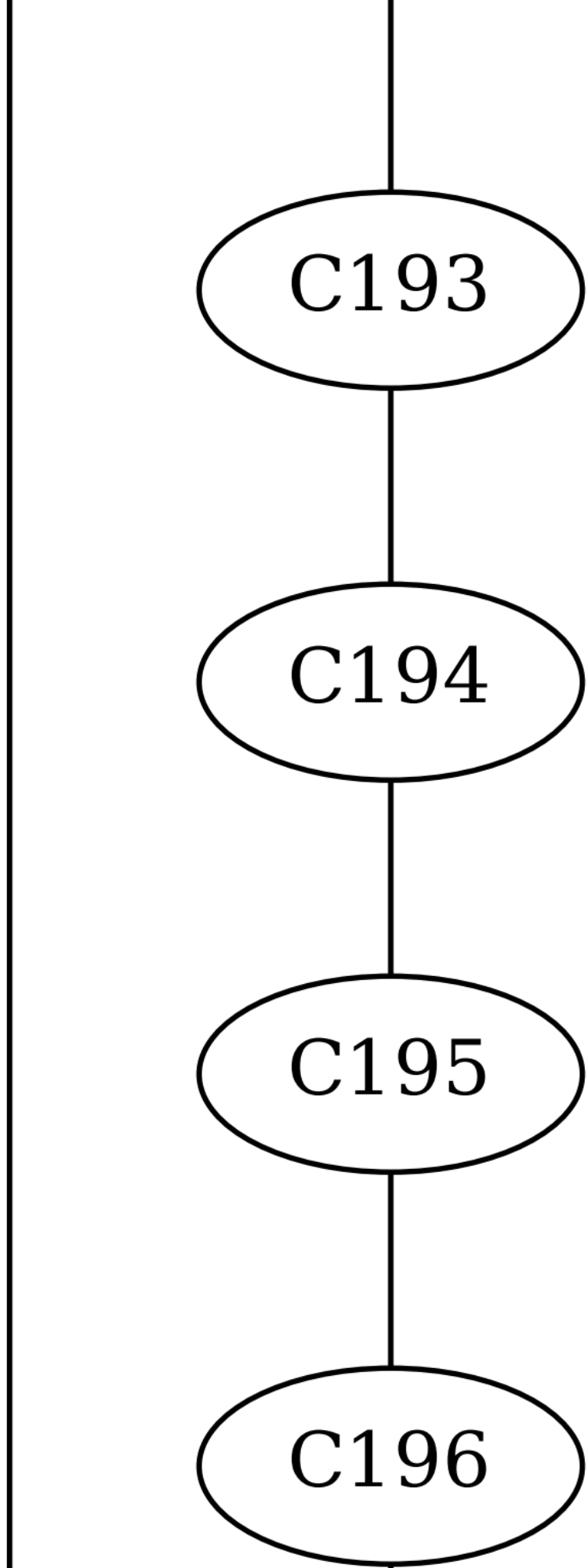
C193
C194
C195
C196

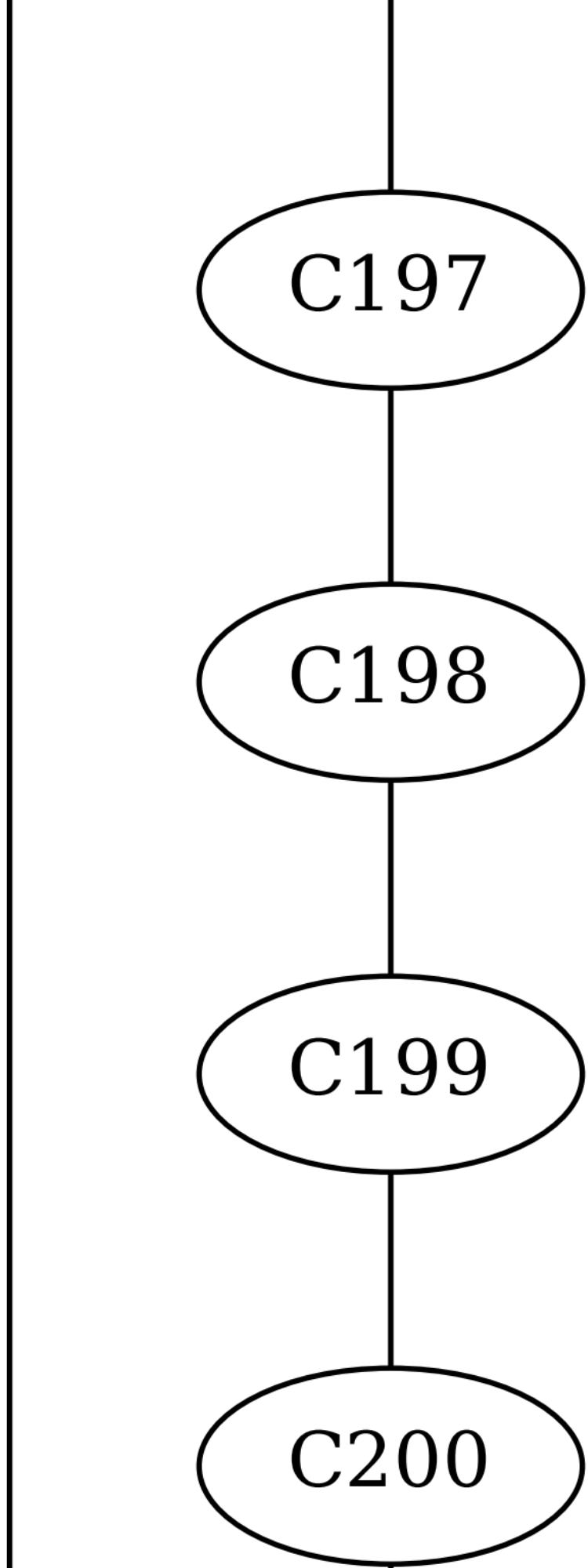
C197
C198
C199
C200

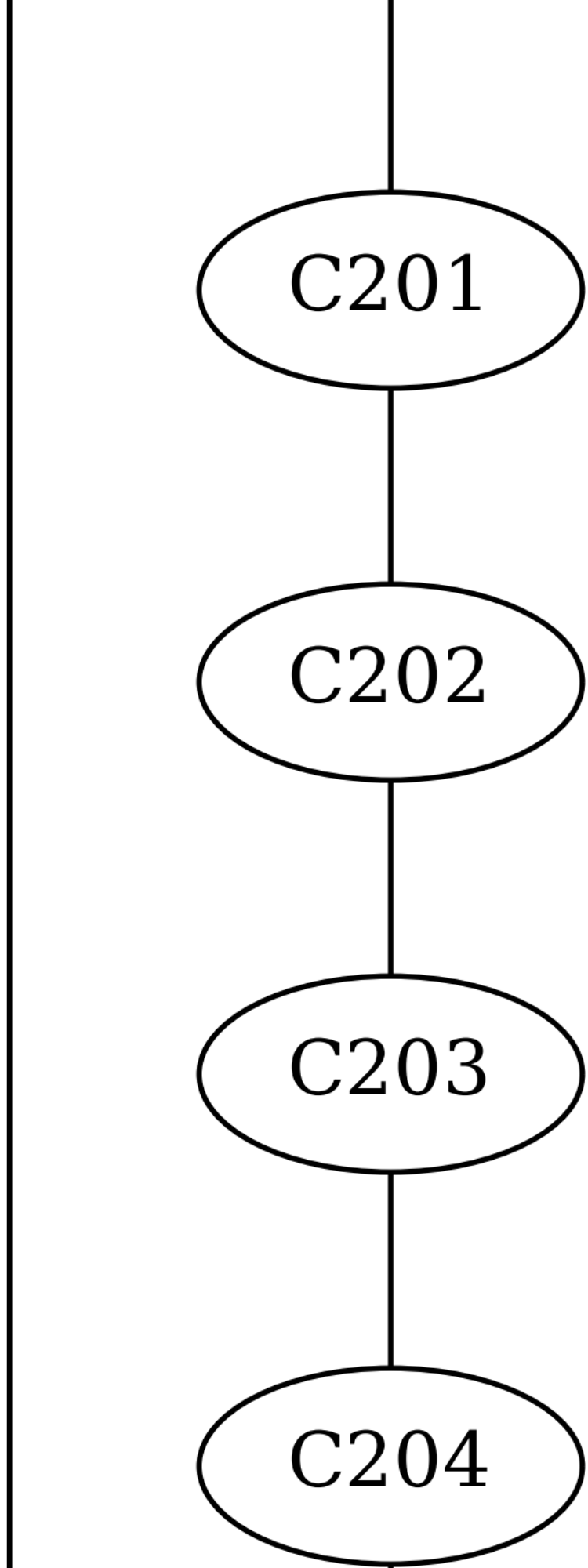
C201
C202
C203
C204

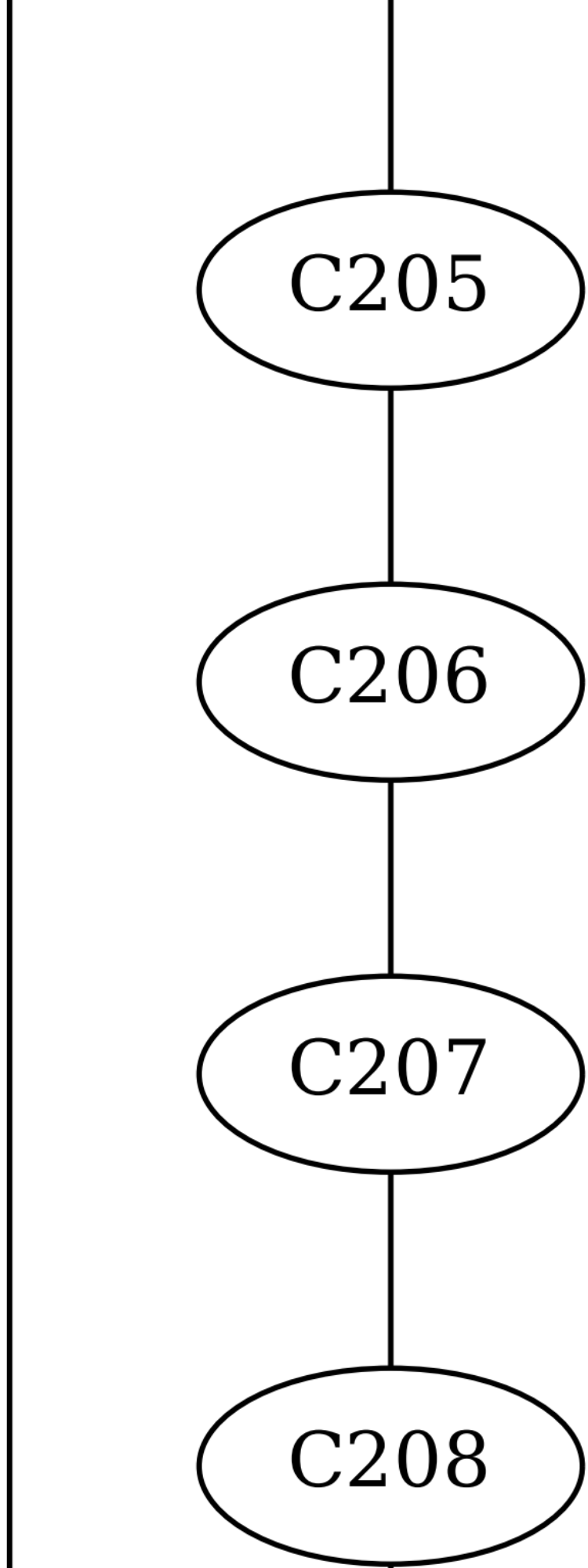
C205
C206
C207
C208

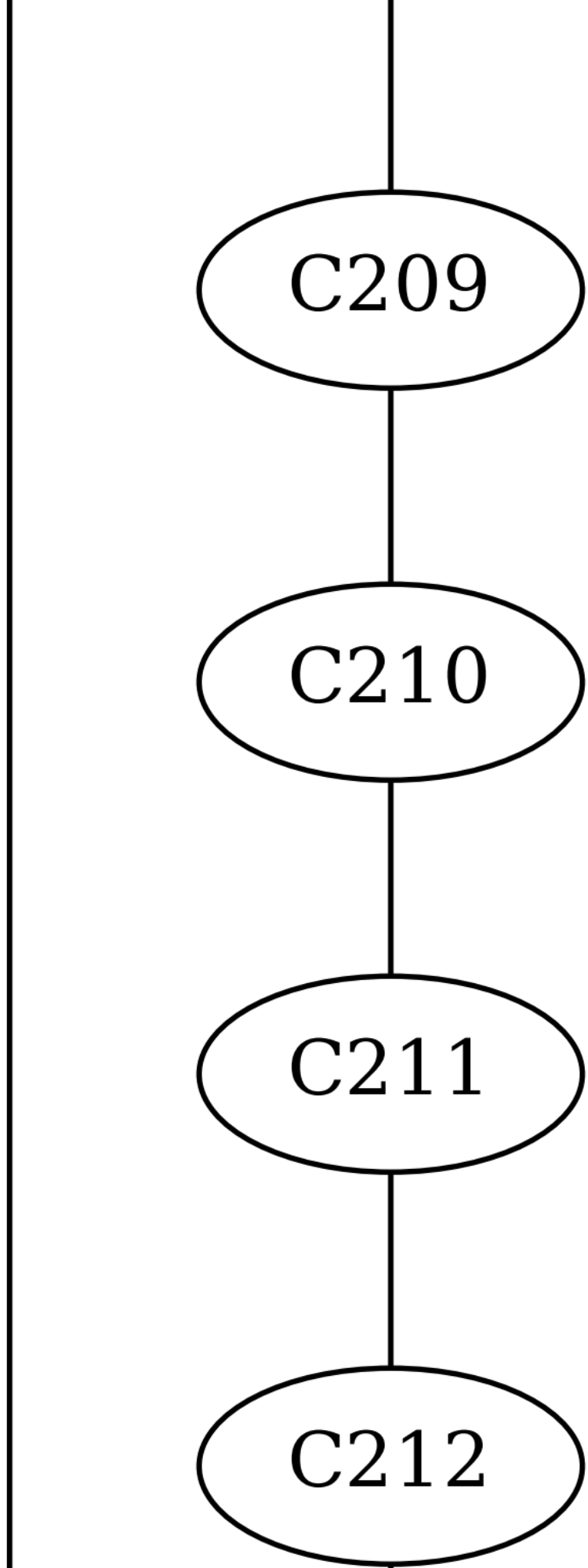
C209
C210
C211
C212

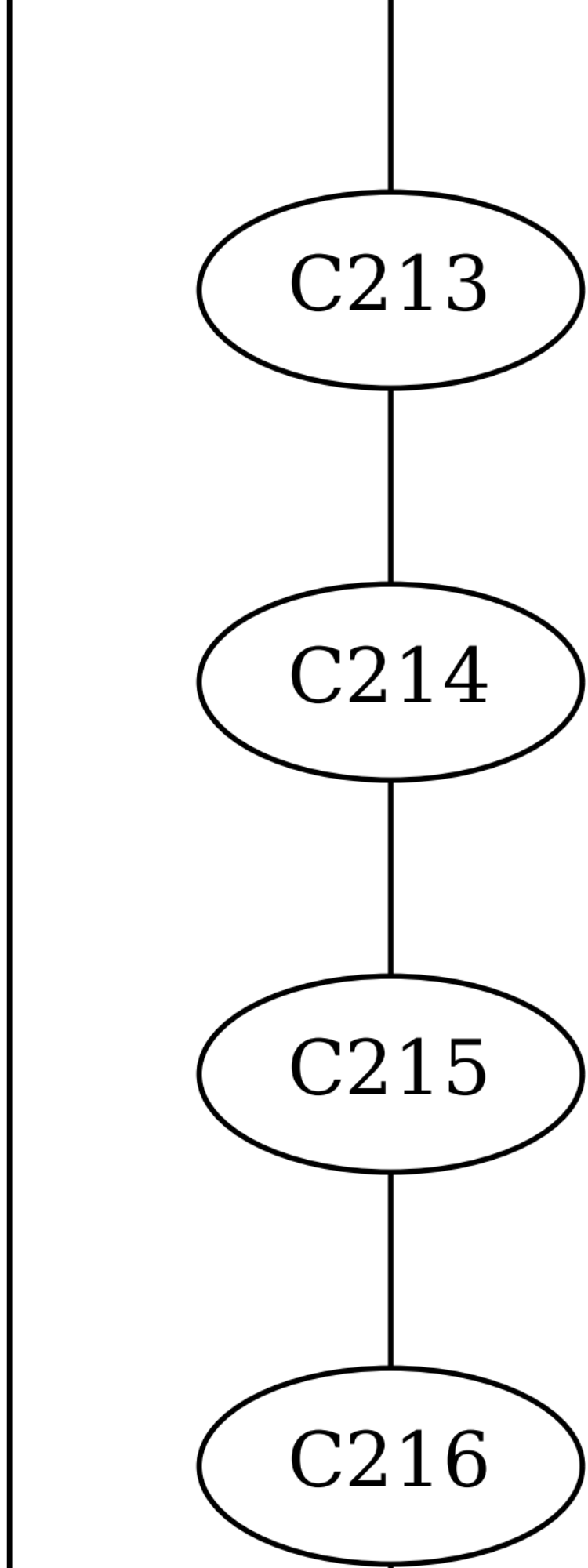
C213
C214
C215
C216

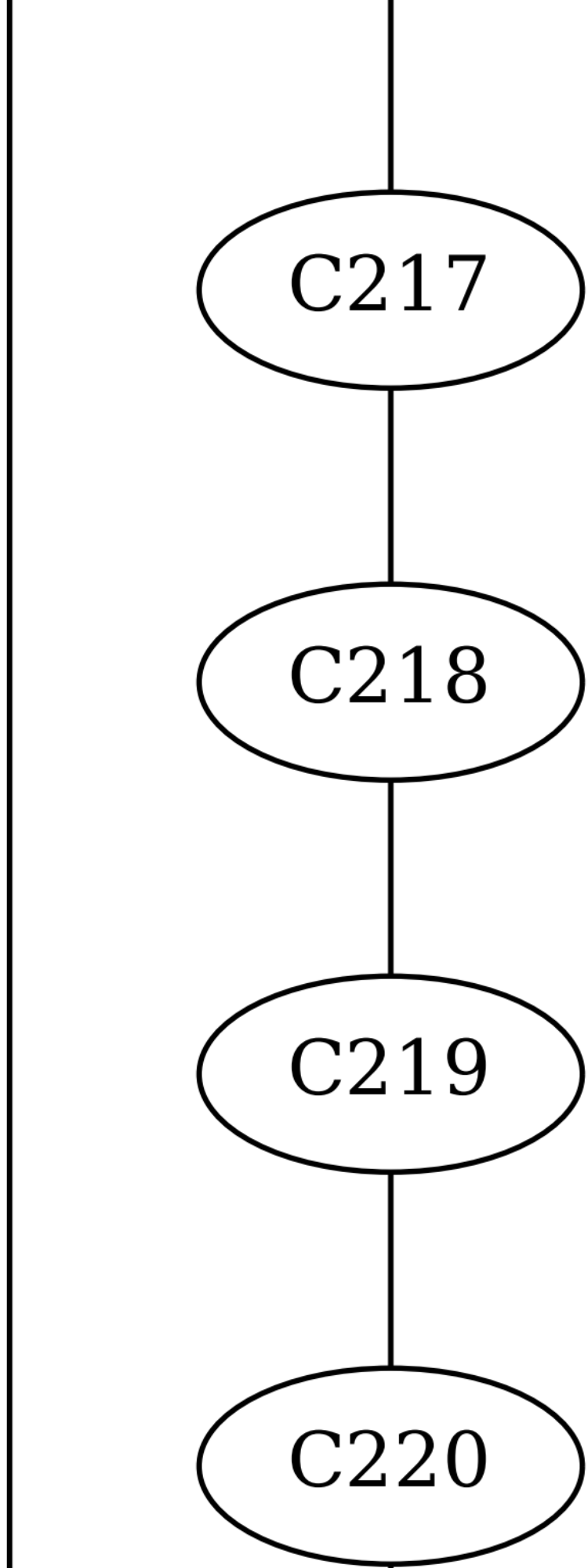
C217
C218
C219
C220

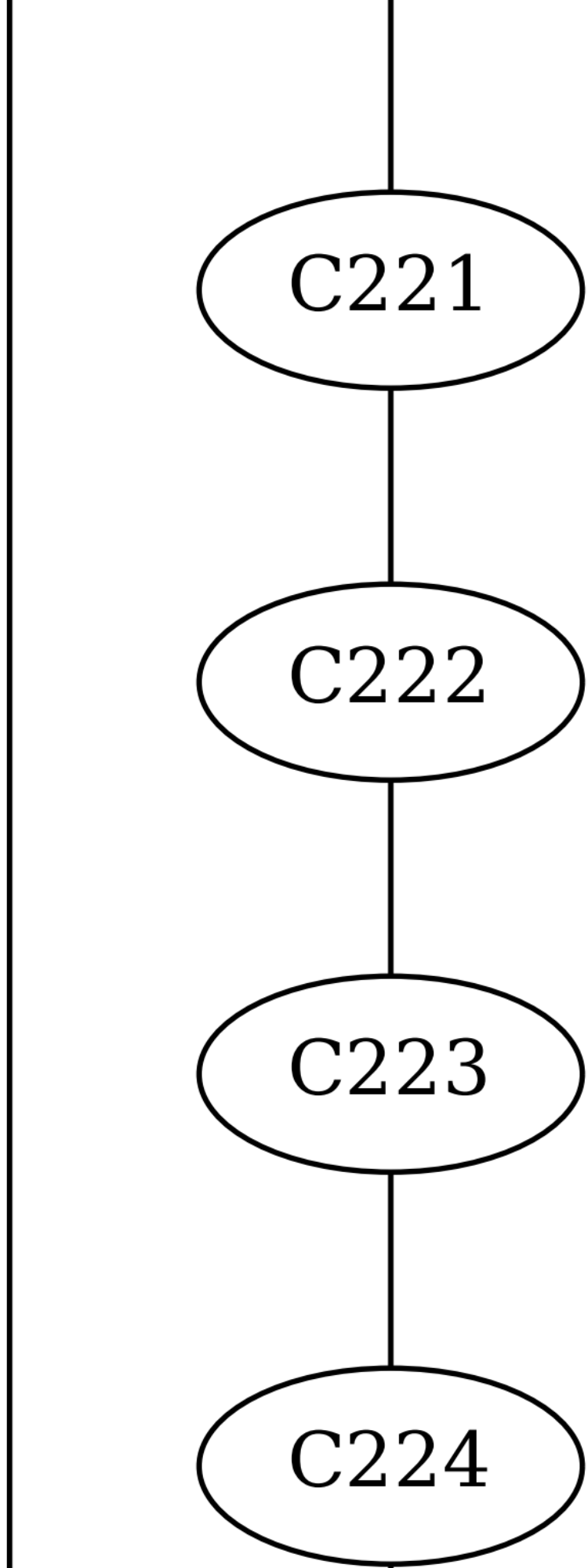
C221
C222
C223
C224

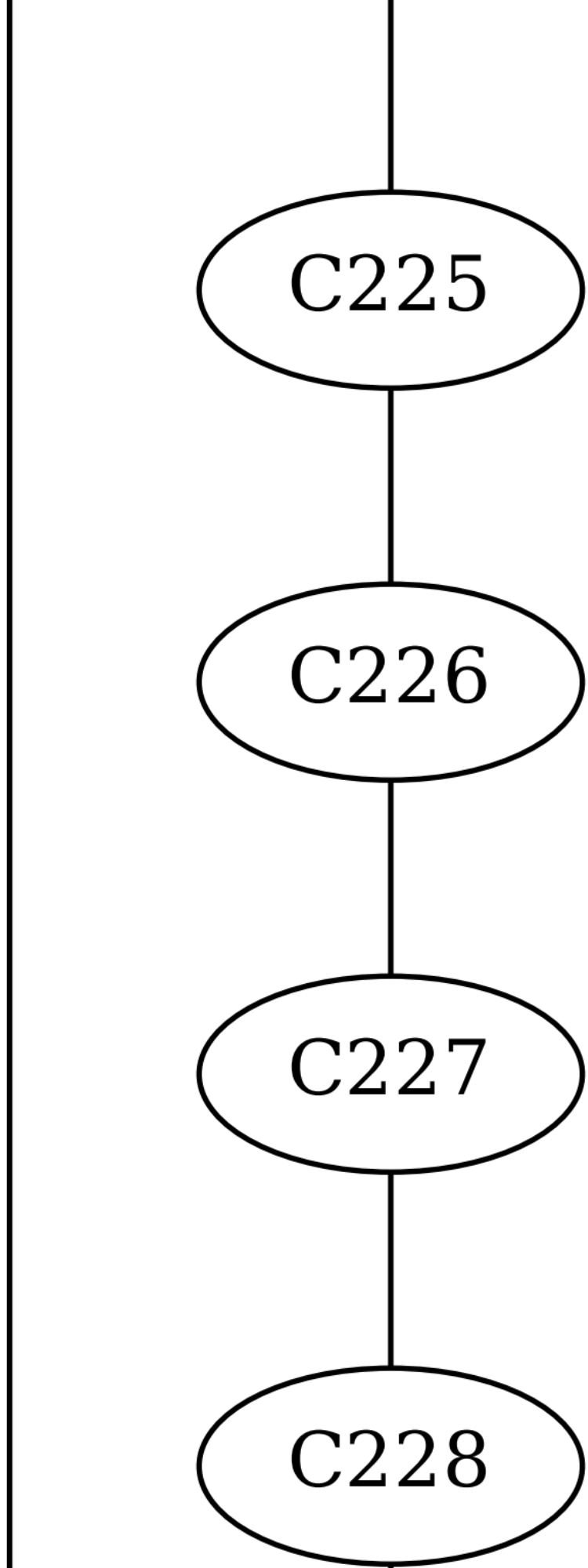
C225
C226
C227
C228

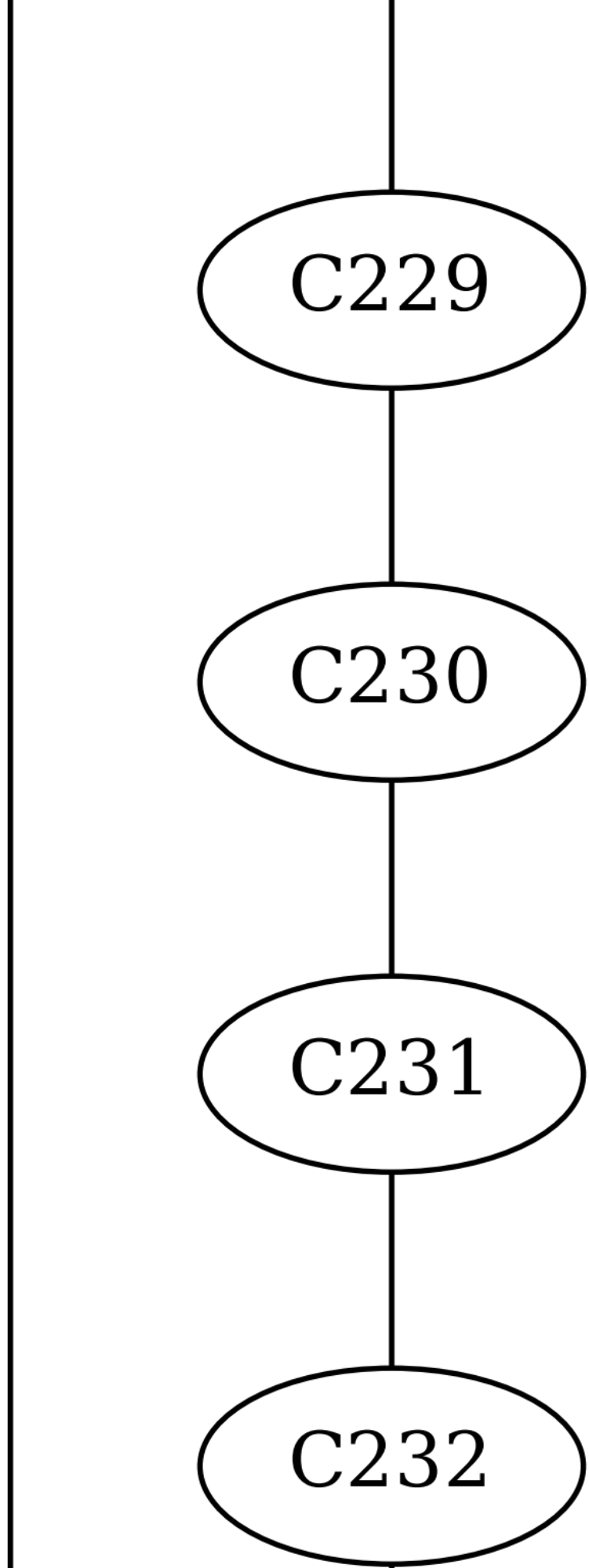
C229
C230
C231
C232

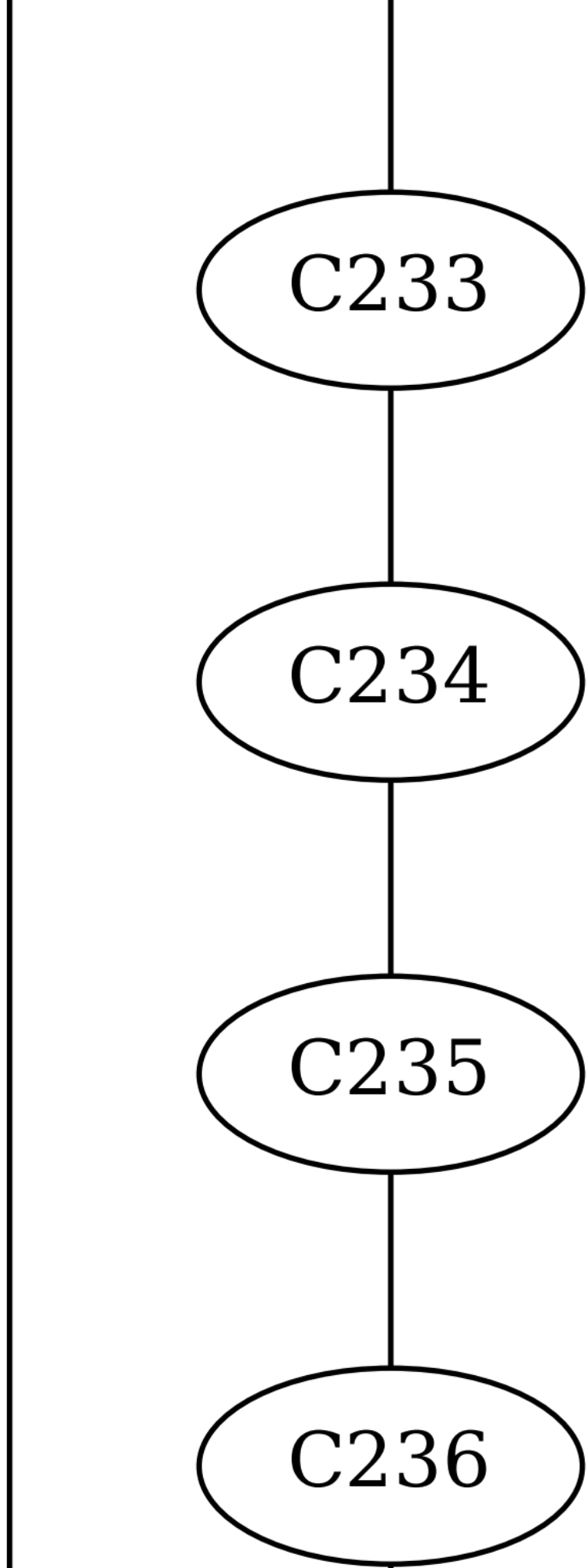
C233
C234
C235
C236

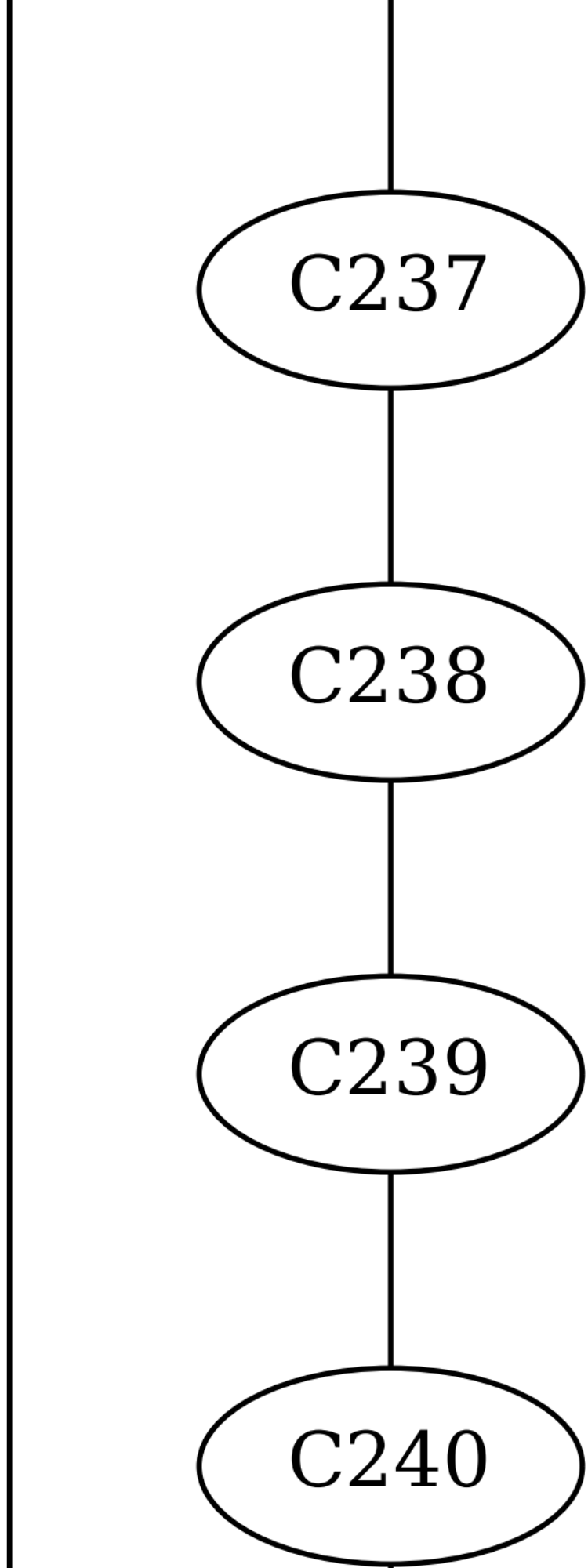
C237
C238
C239
C240

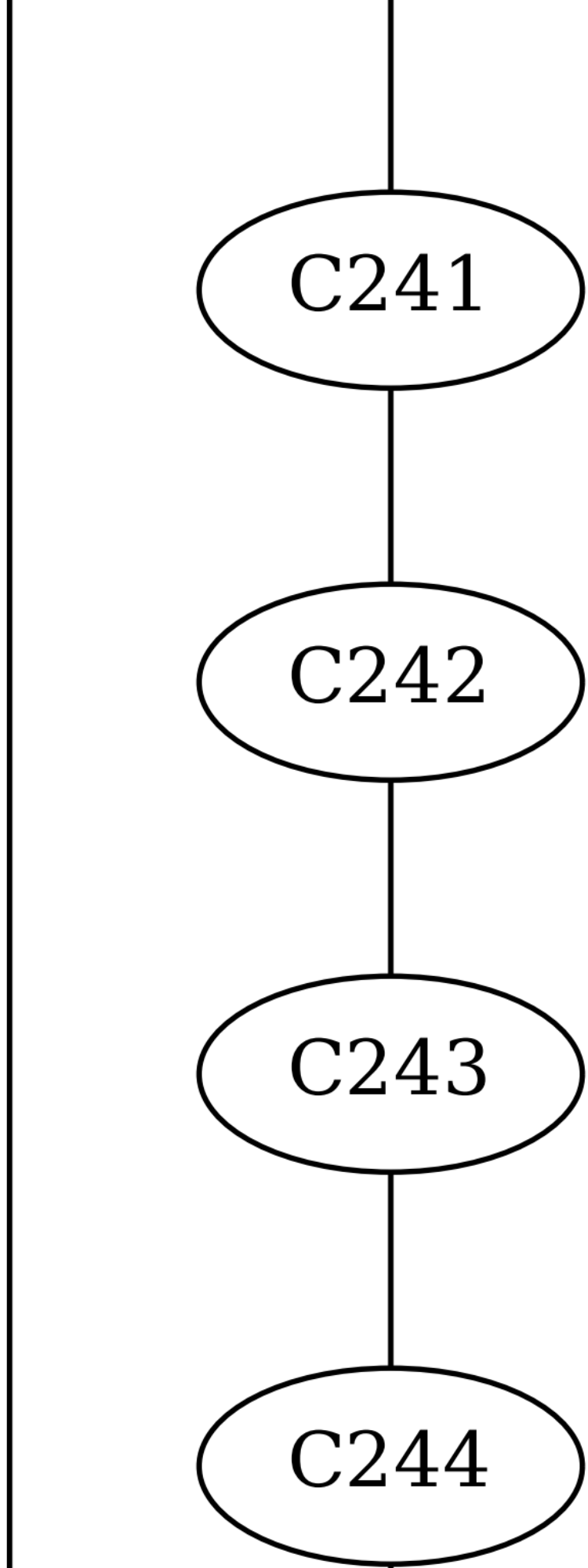
C241
C242
C243
C244

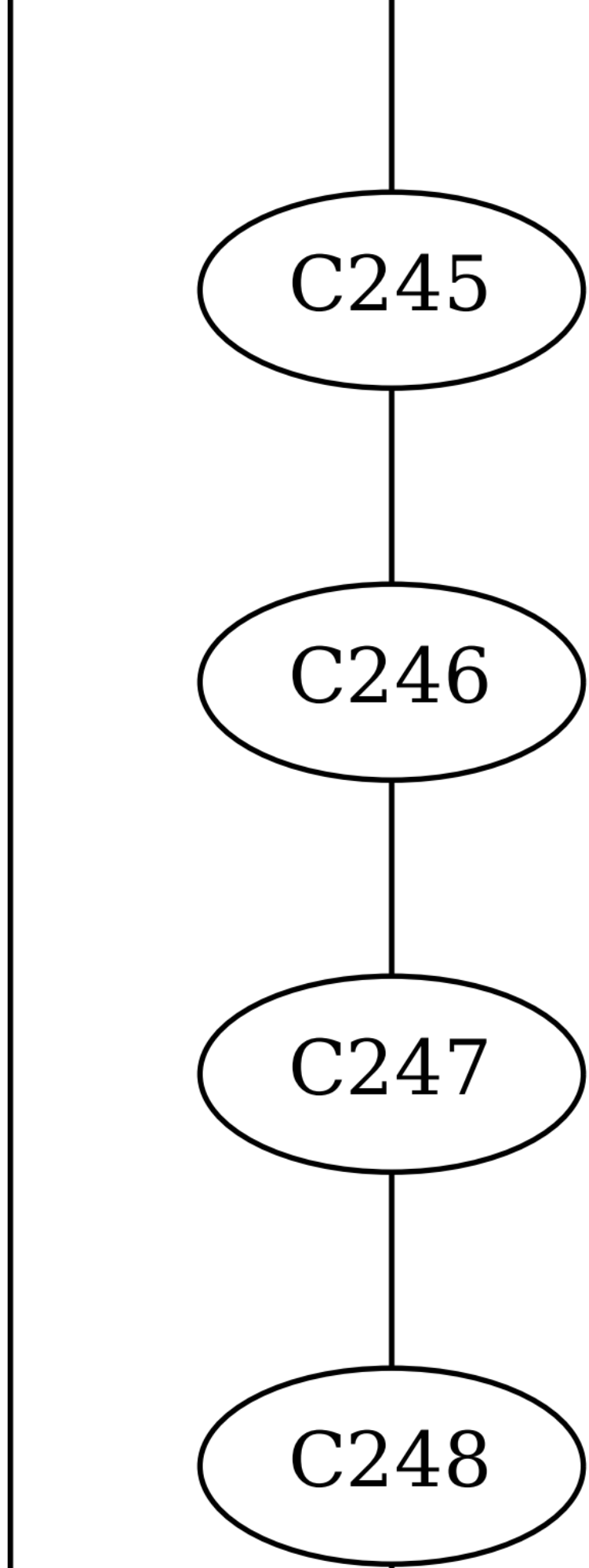
C245
C246
C247
C248

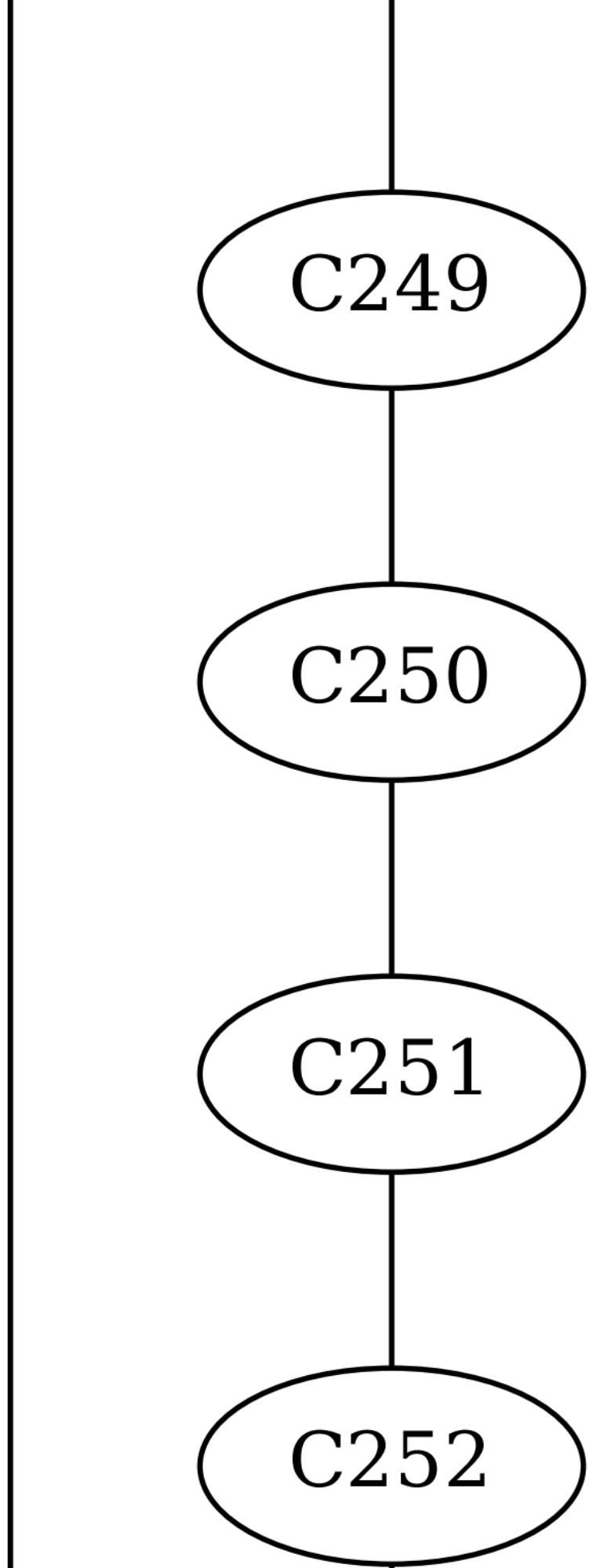
C249
C250
C251
C252

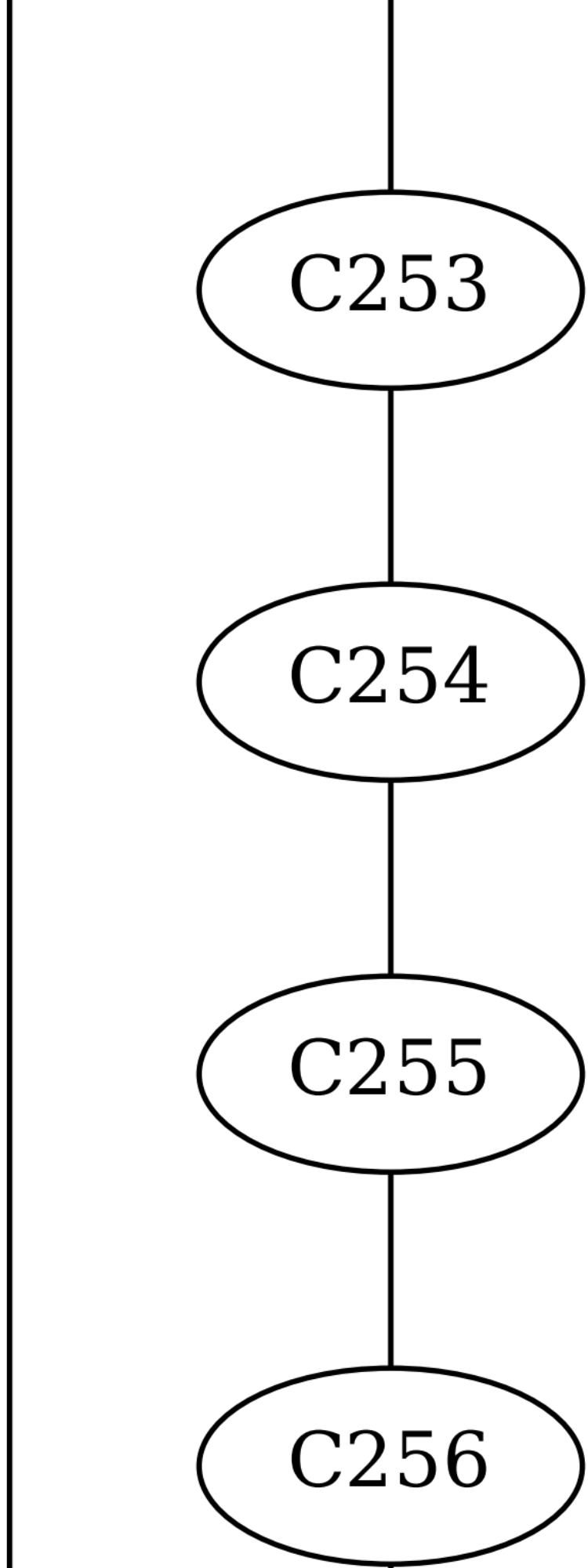
C253
C254
C255
C256

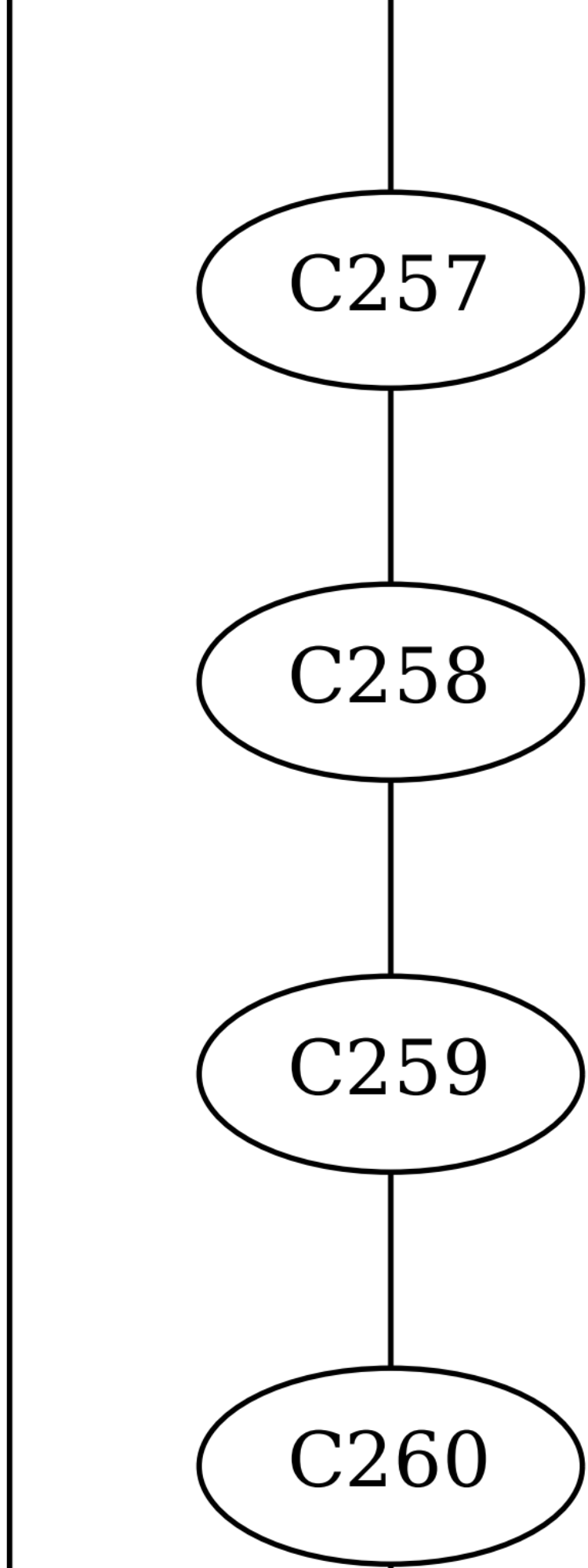
C257
C258
C259
C260

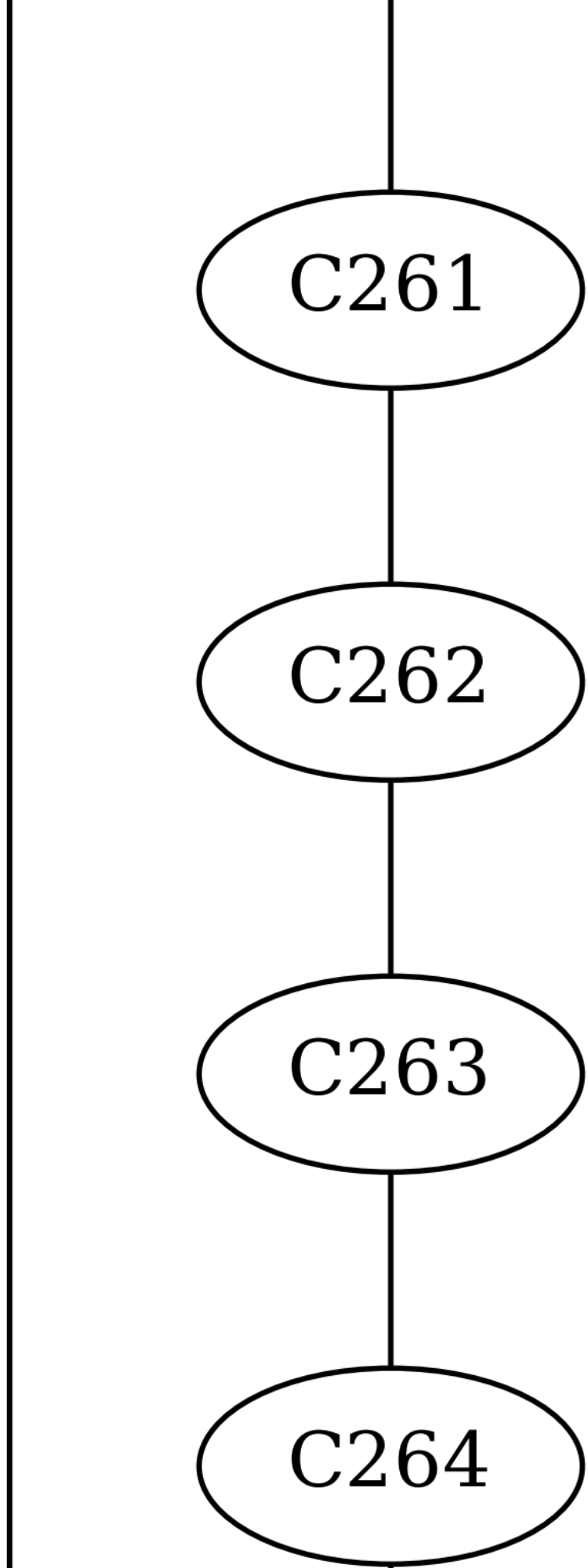
C261
C262
C263
C264

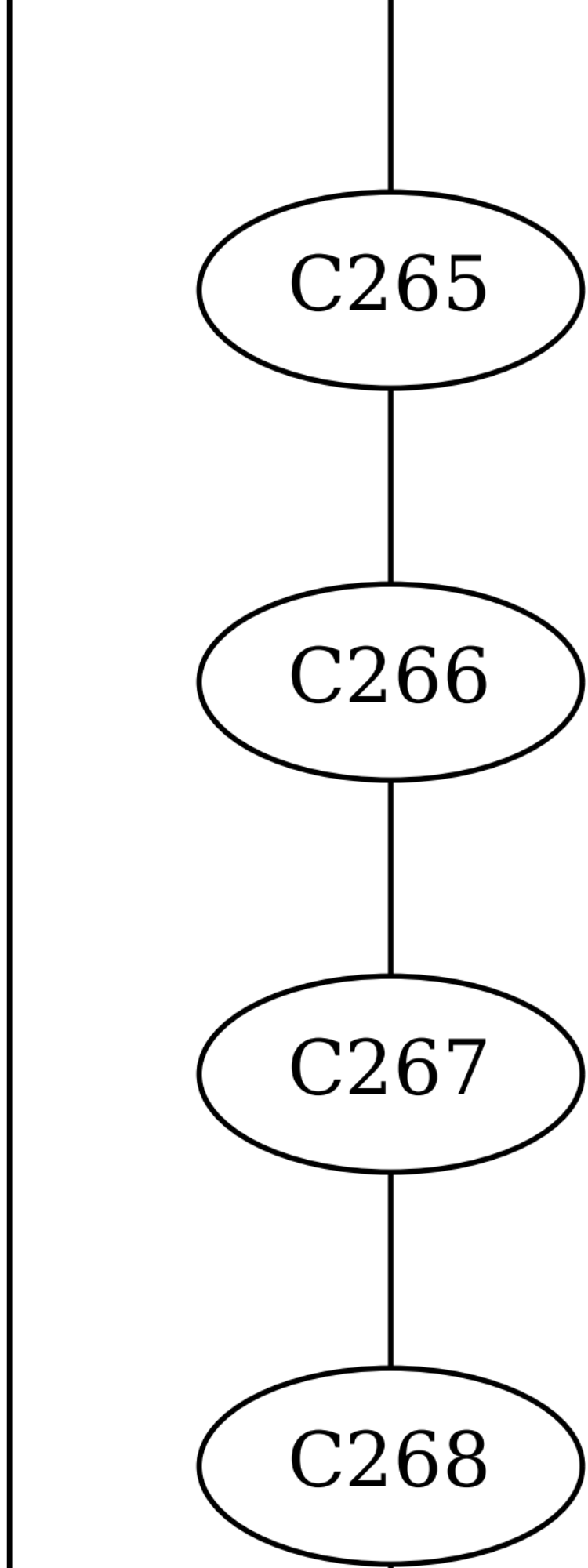
C265
C266
C267
C268

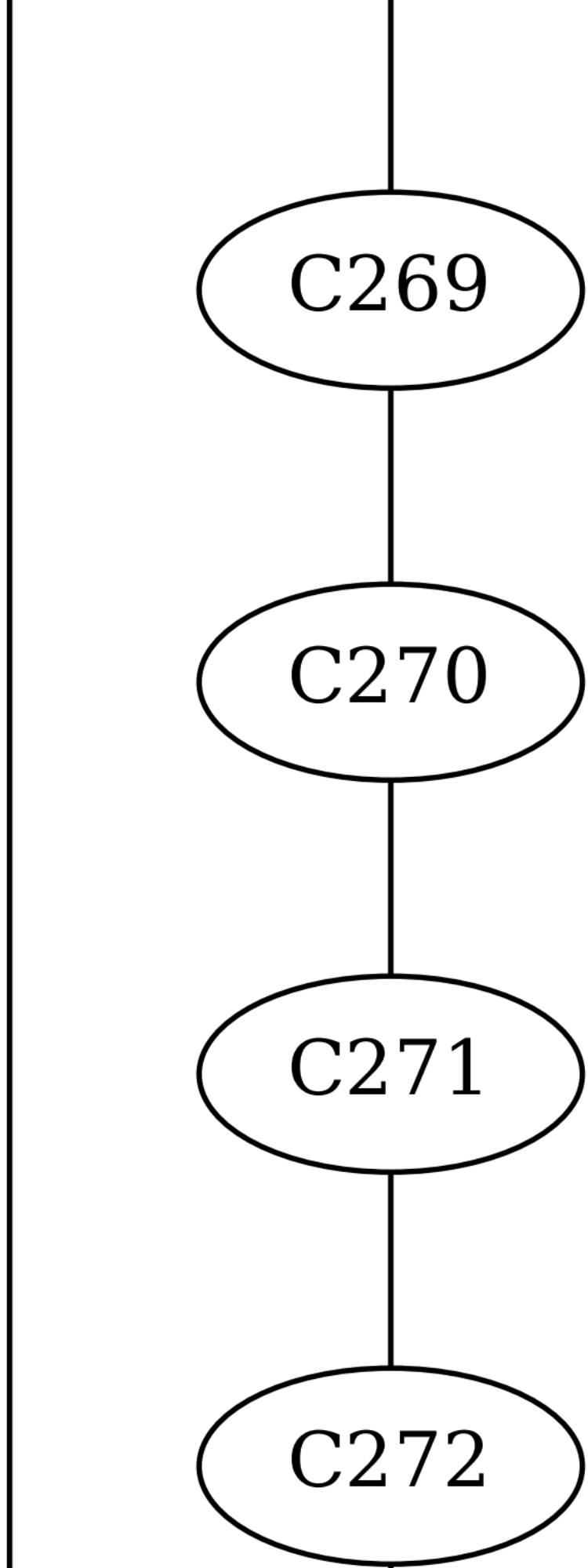
C269
C270
C271
C272

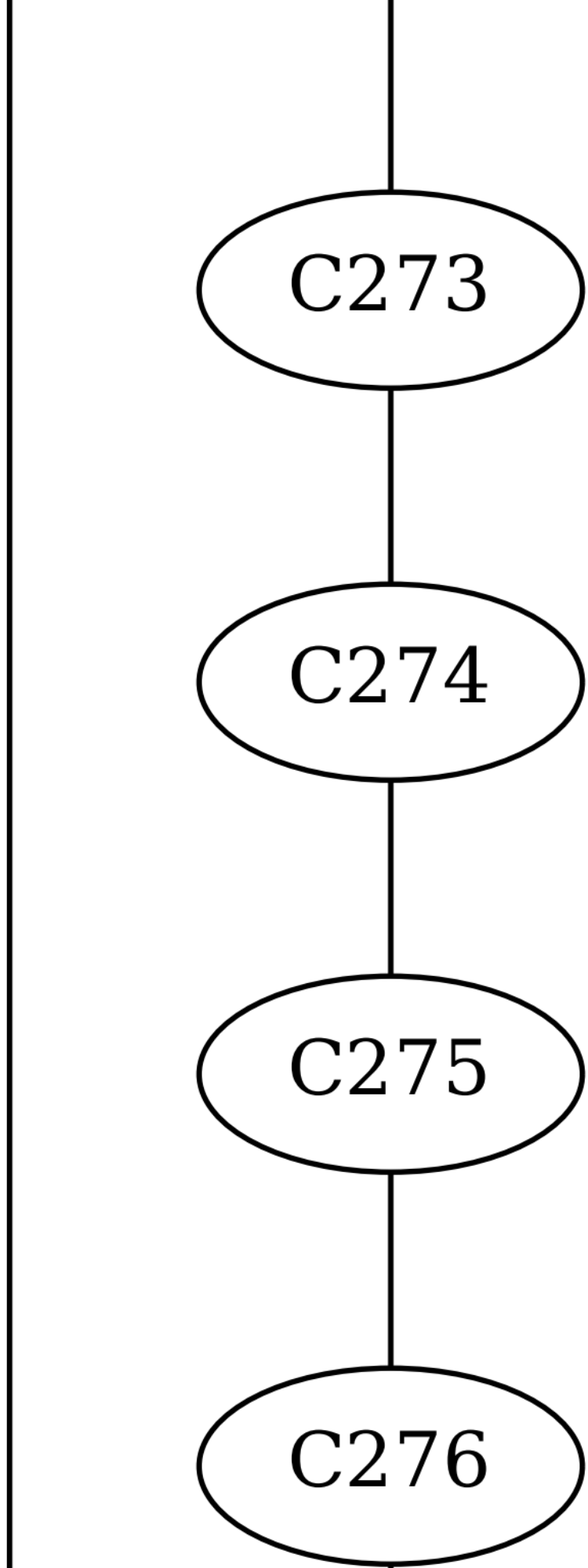
C273
C274
C275
C276

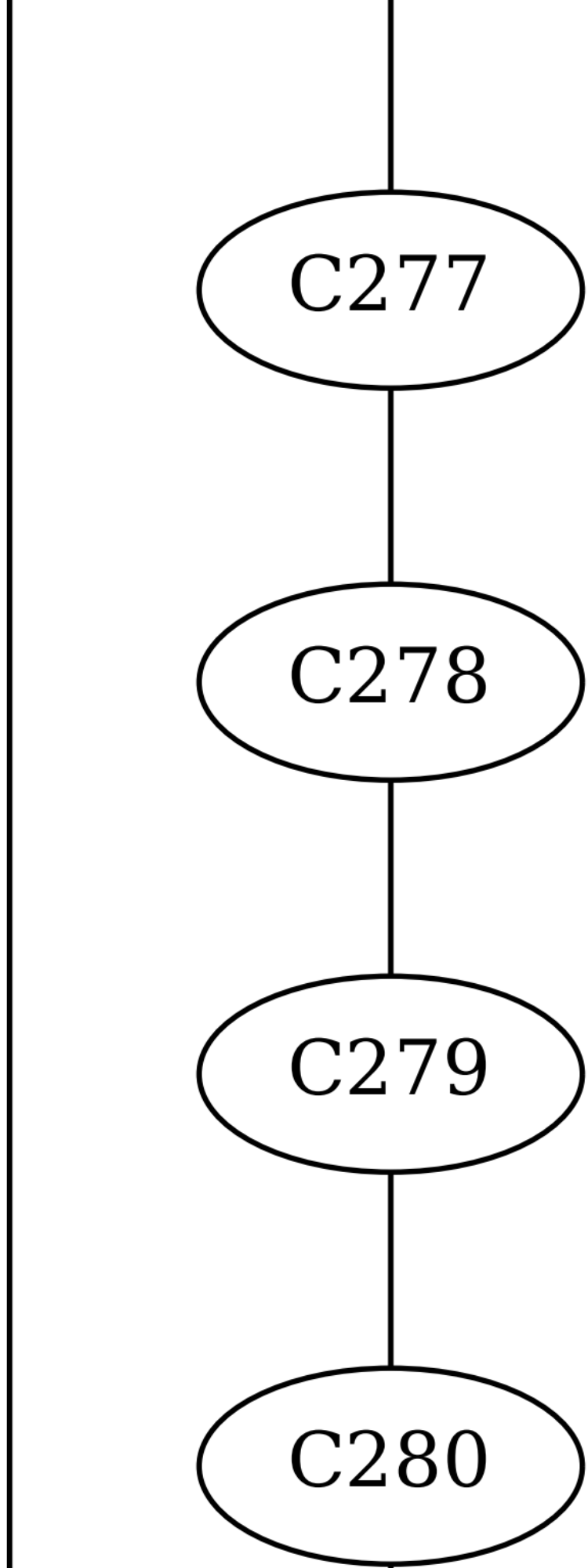
C277
C278
C279
C280

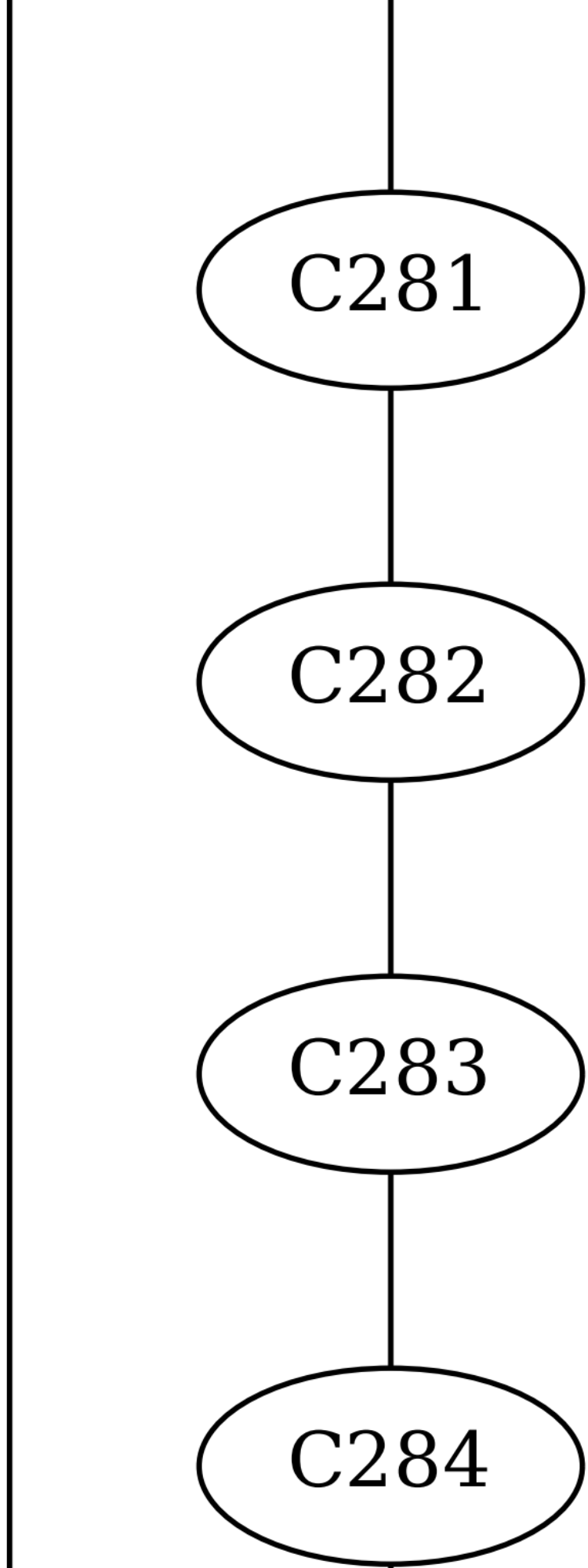
C281
C282
C283
C284

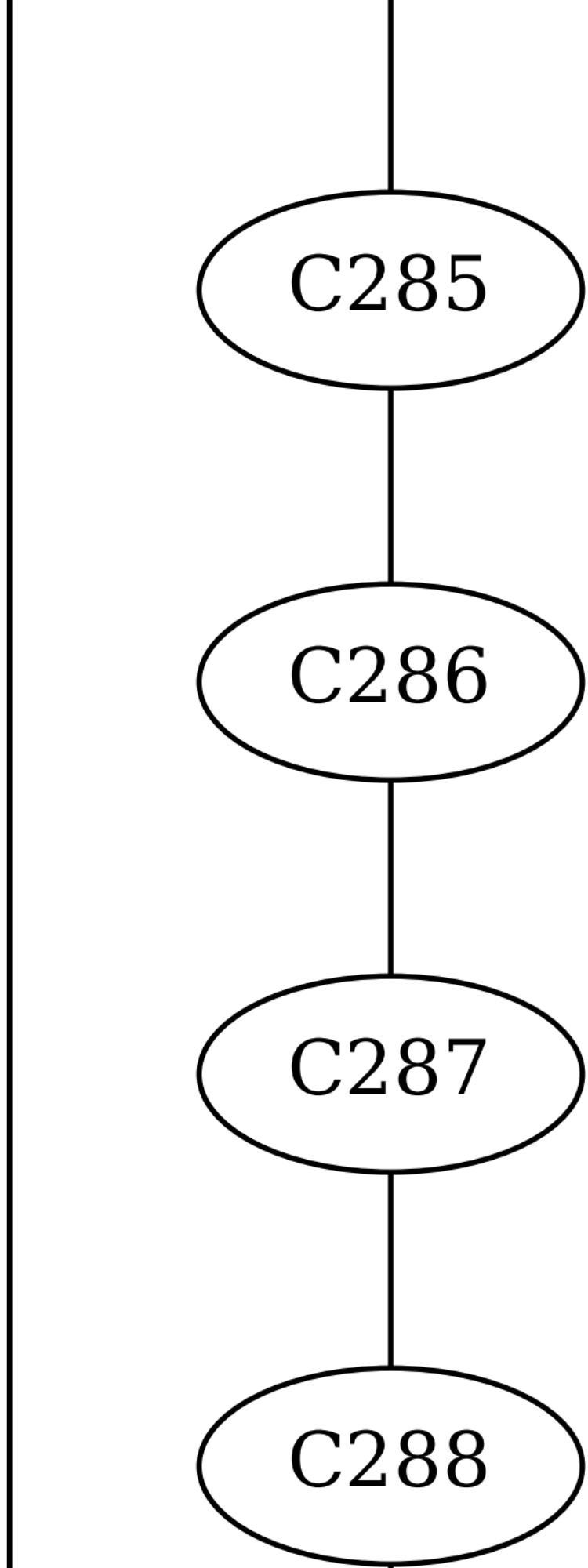
C285
C286
C287
C288

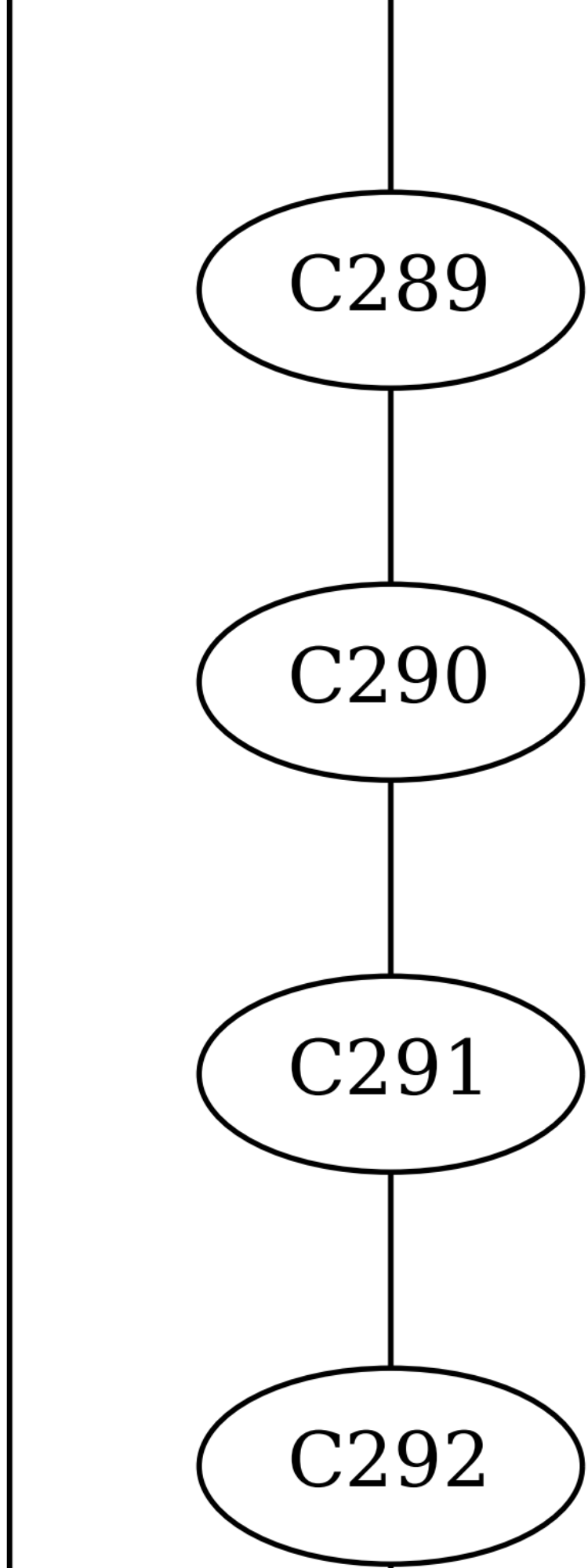
C289
C290
C291
C292

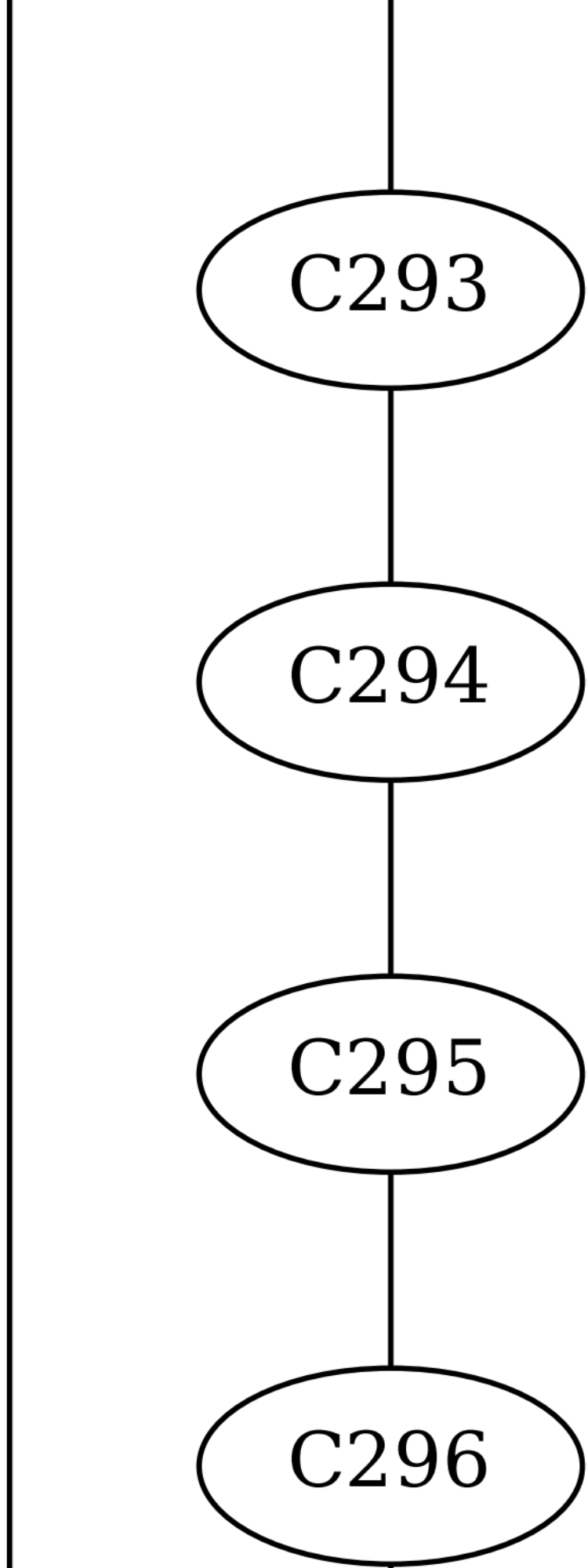
C293
C294
C295
C296

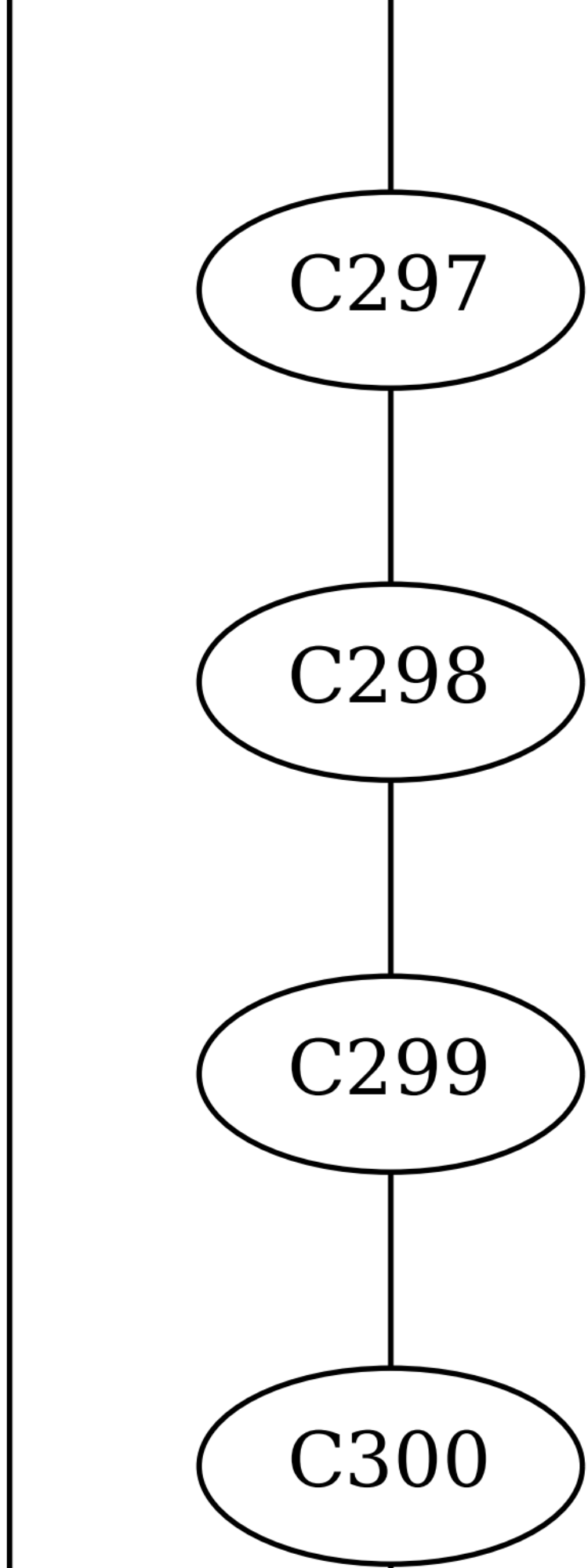
C297
C298
C299
C300

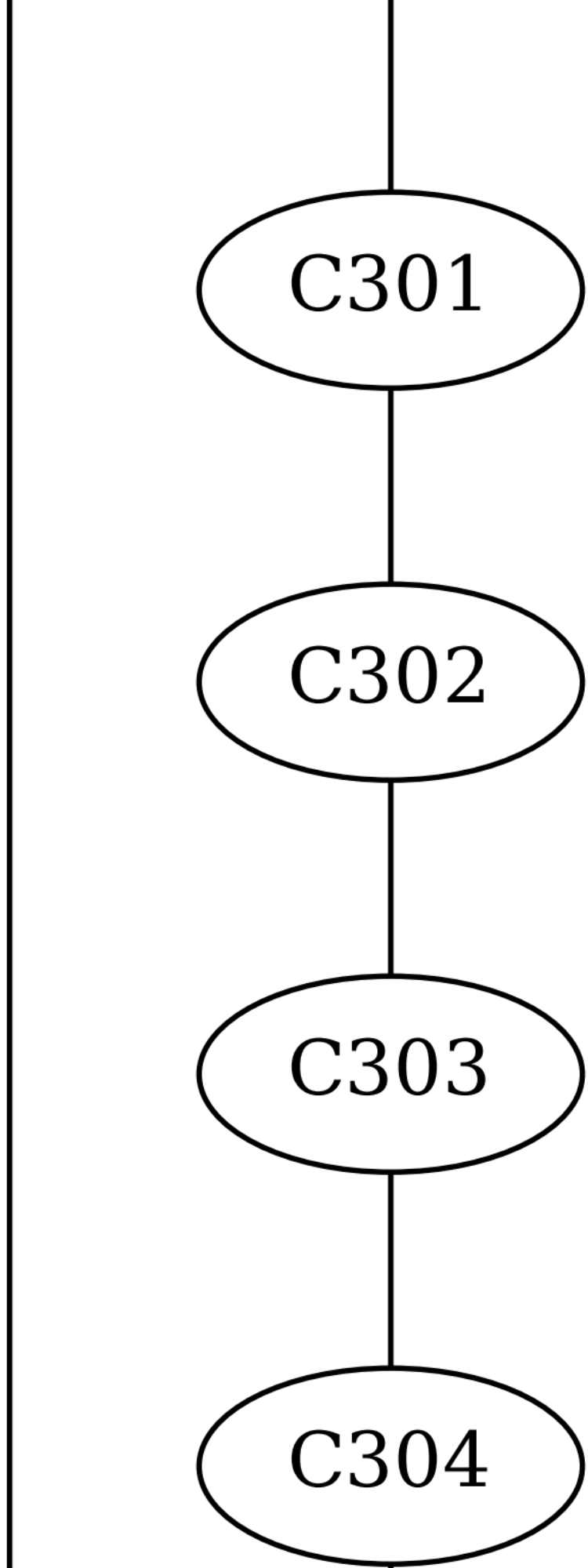
C301
C302
C303
C304

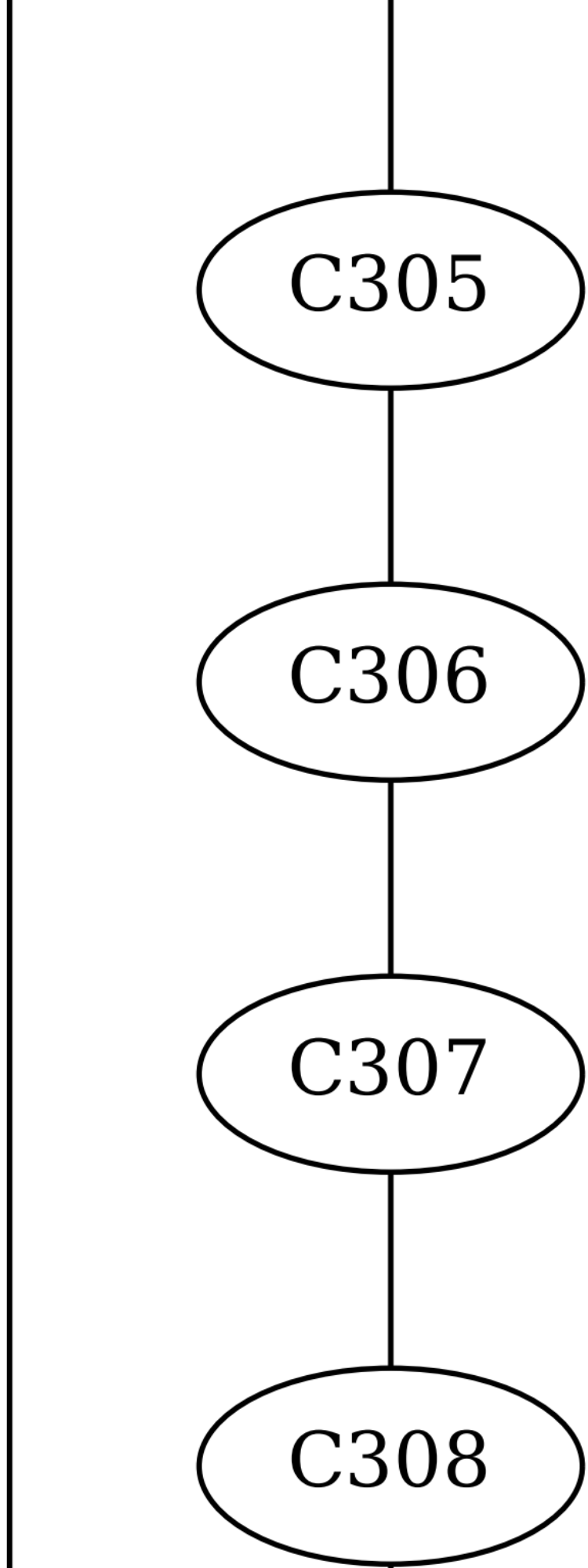
C305
C306
C307
C308

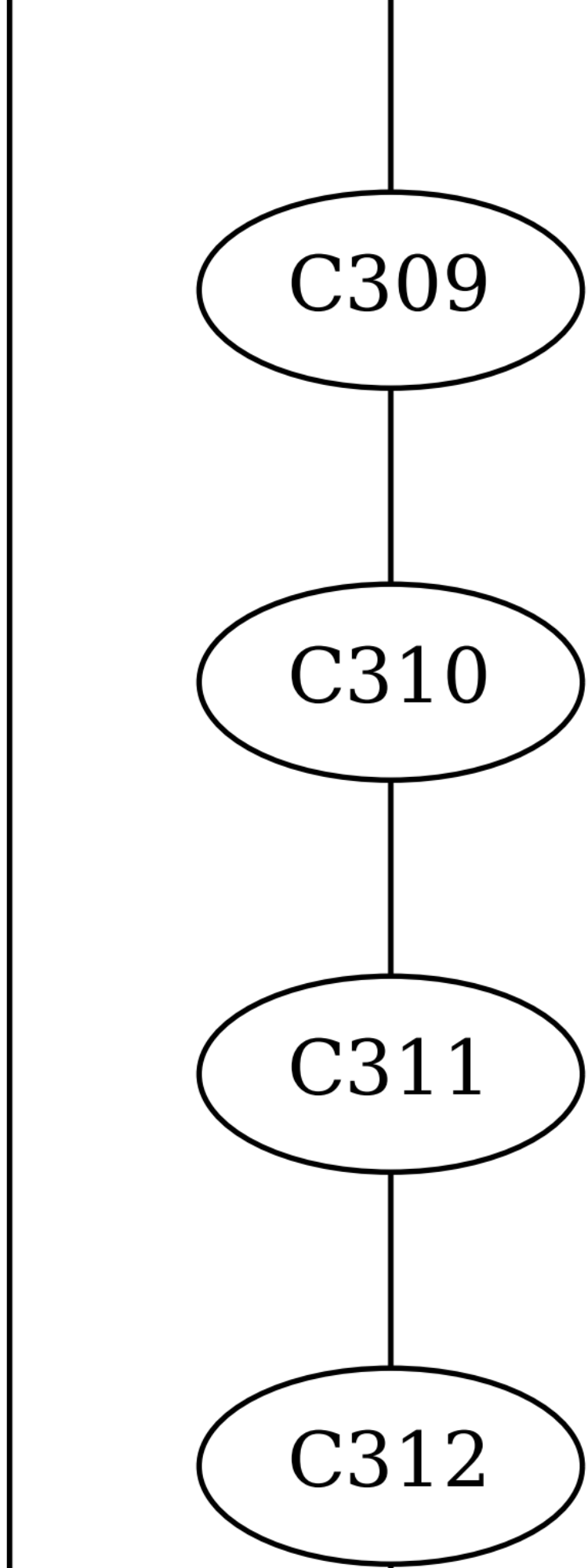
C309
C310
C311
C312

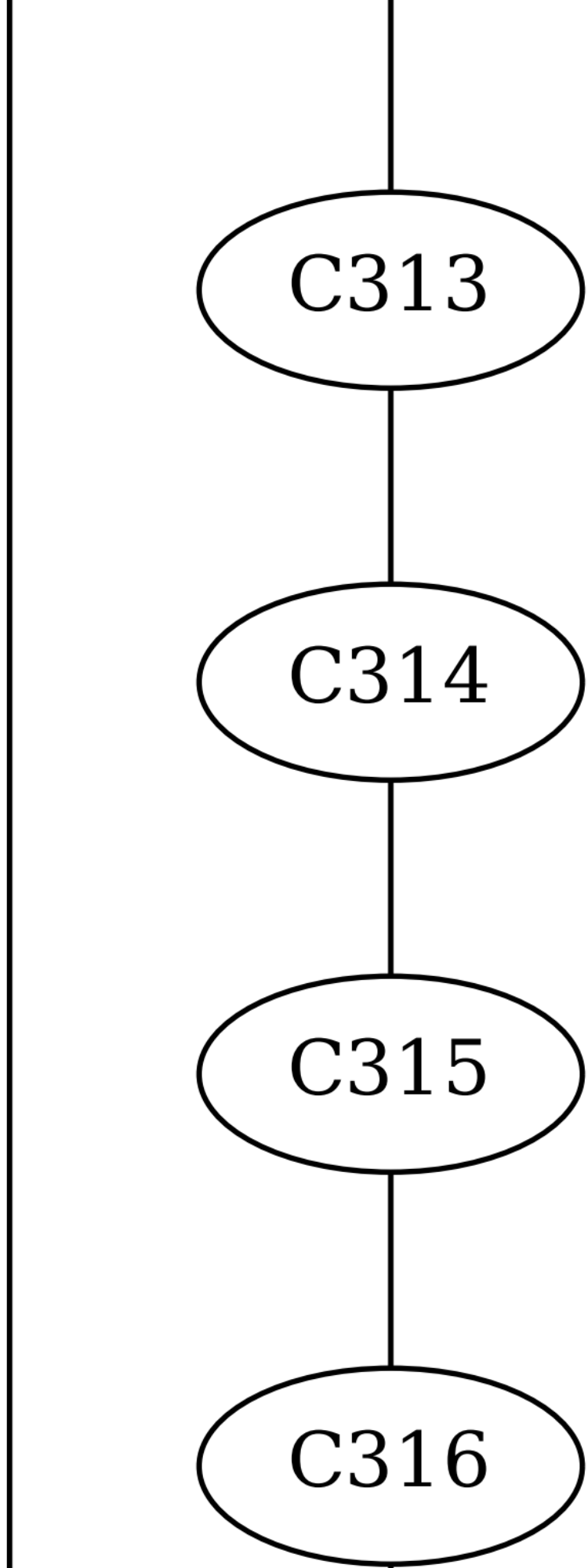
C313
C314
C315
C316

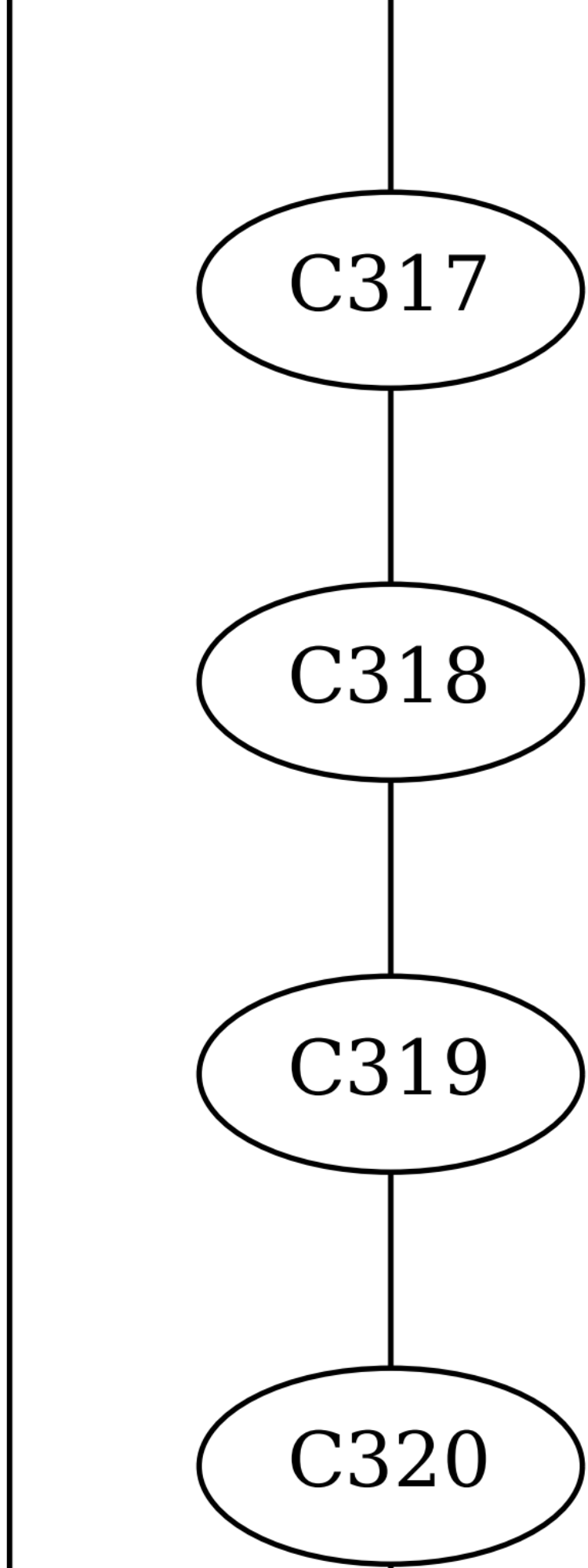
C317
C318
C319
C320

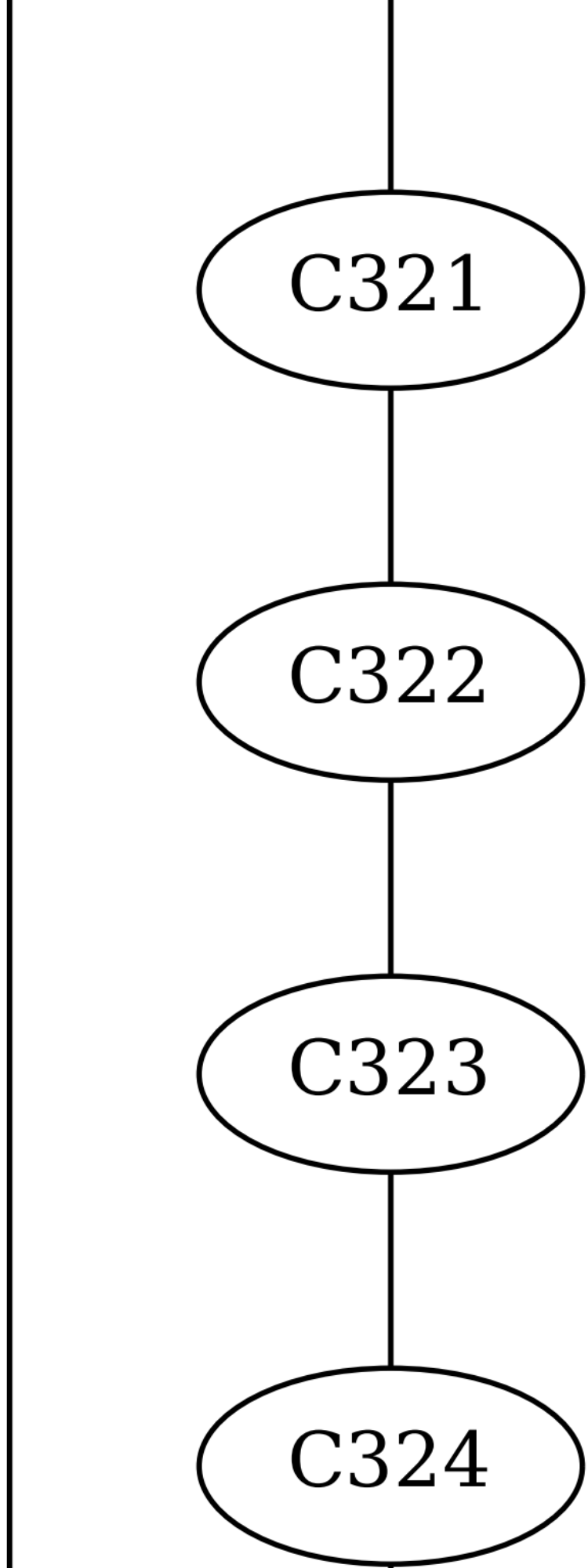
C321
C322
C323
C324

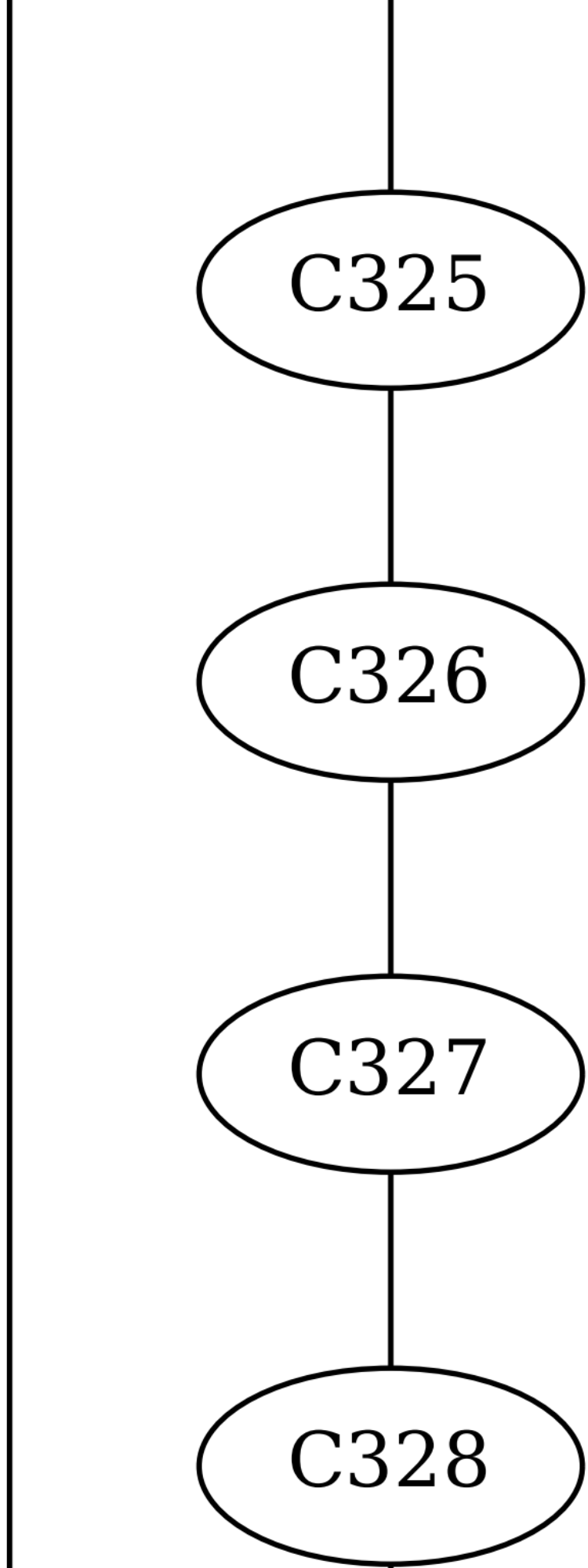
C325
C326
C327
C328

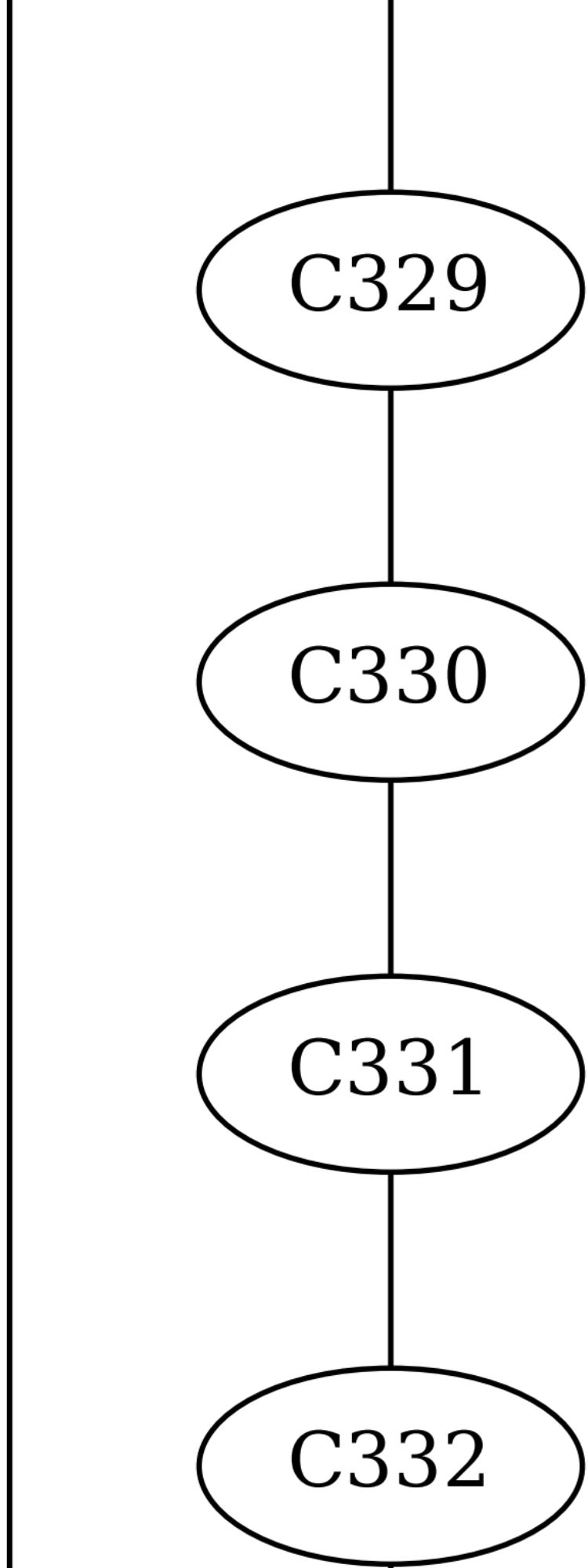
C329
C330
C331
C332

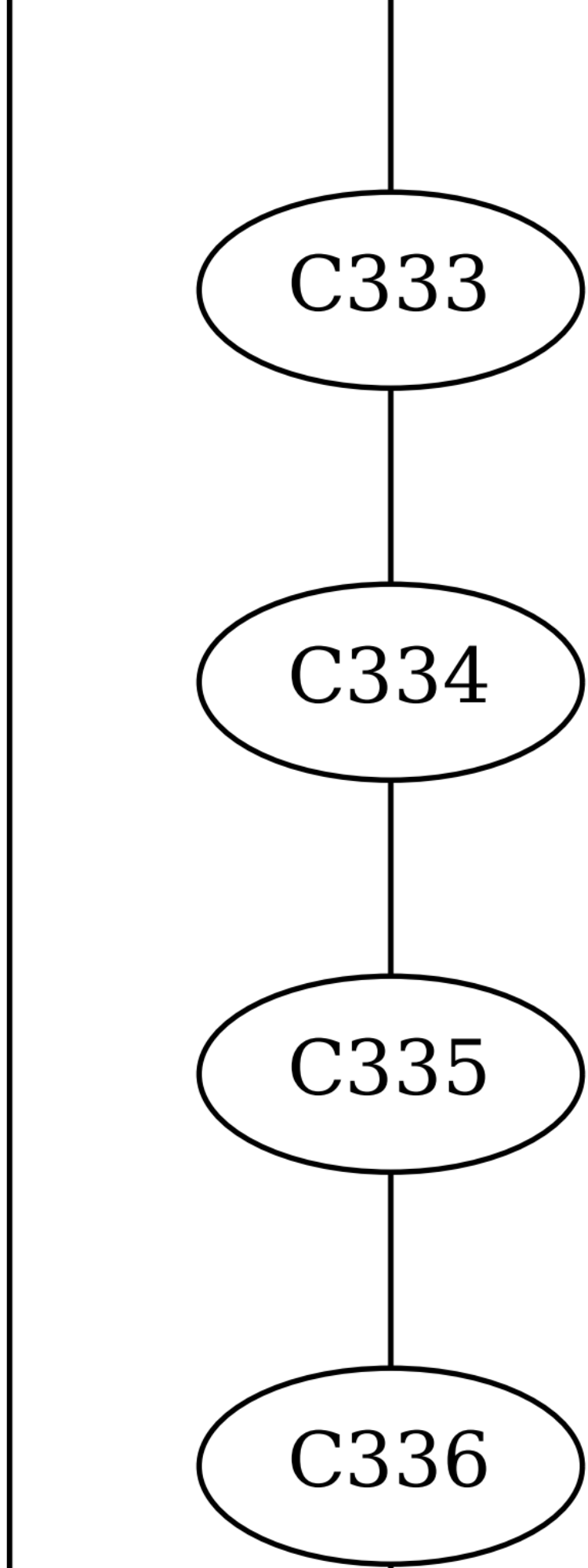
C333
C334
C335
C336

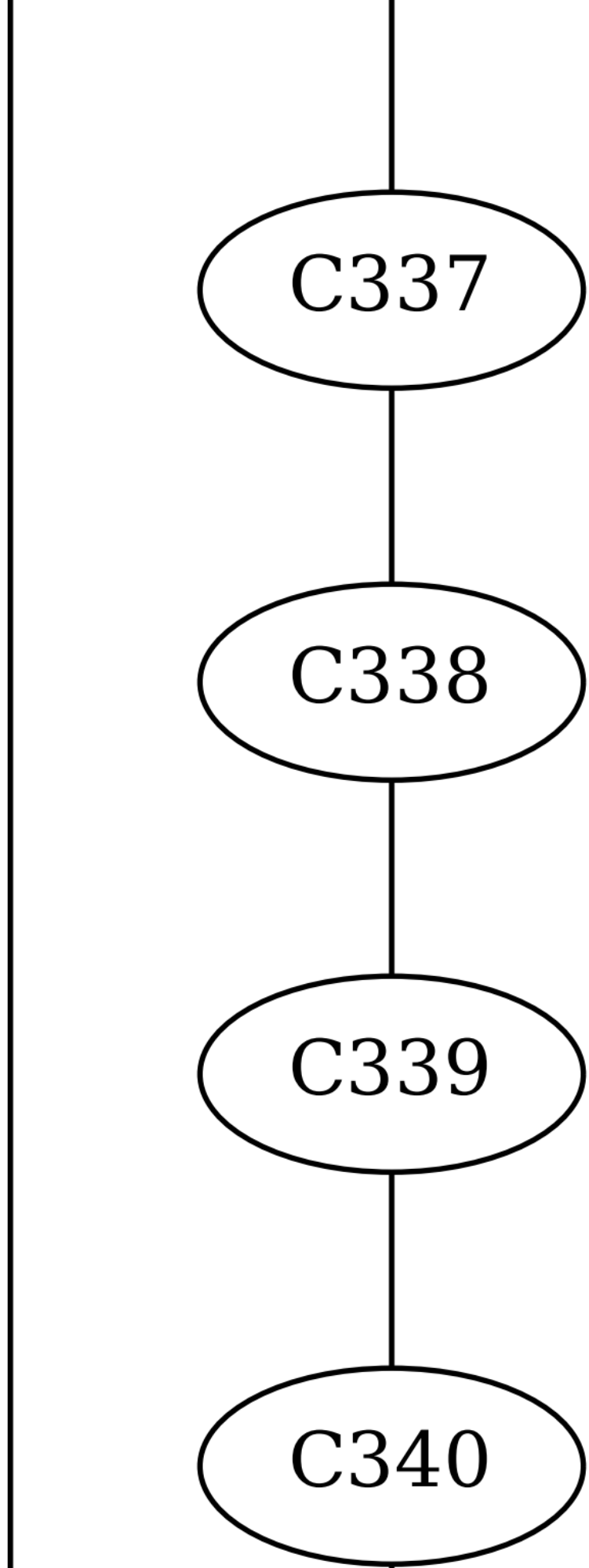
C337
C338
C339
C340

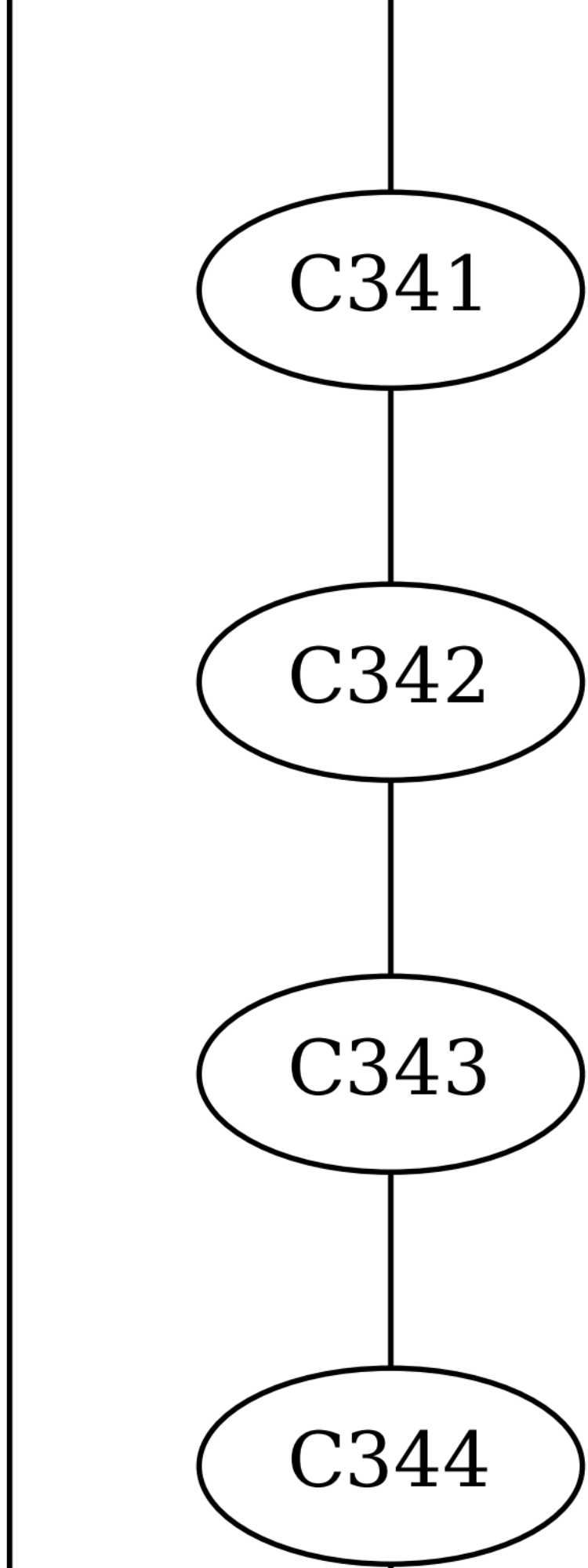
C341
C342
C343
C344

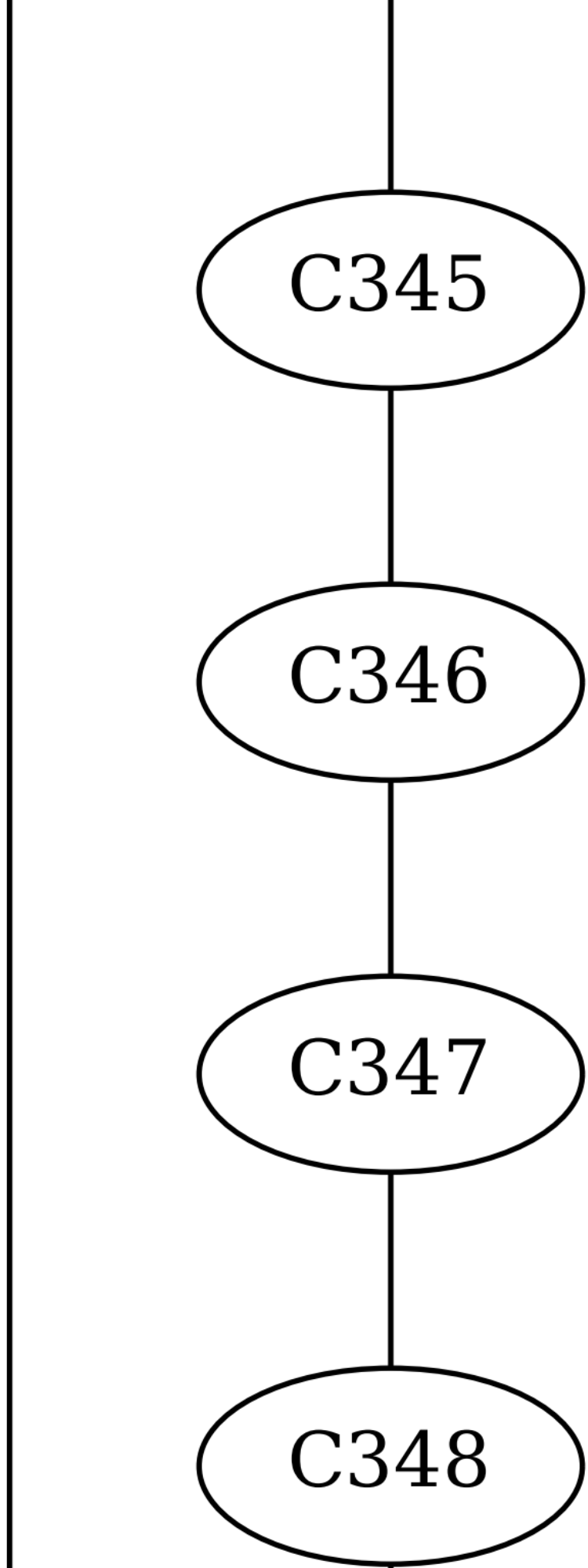
C345
C346
C347
C348

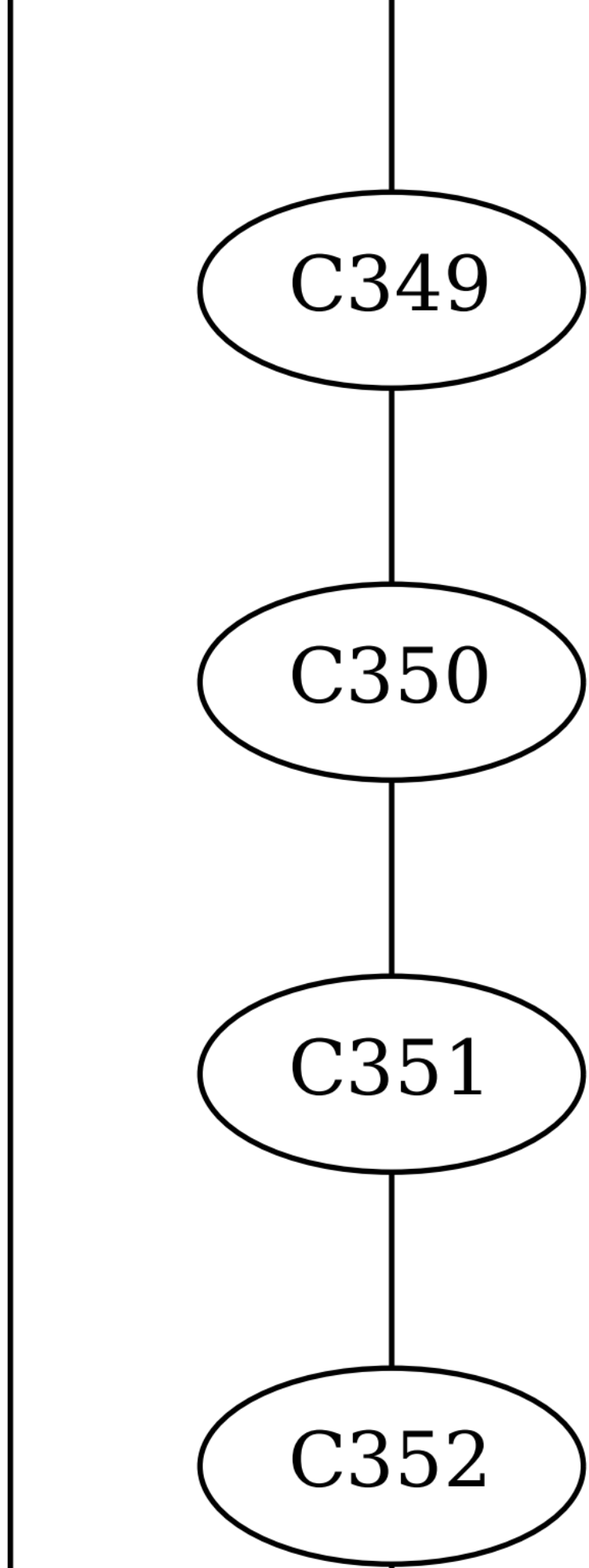
C349
C350
C351
C352

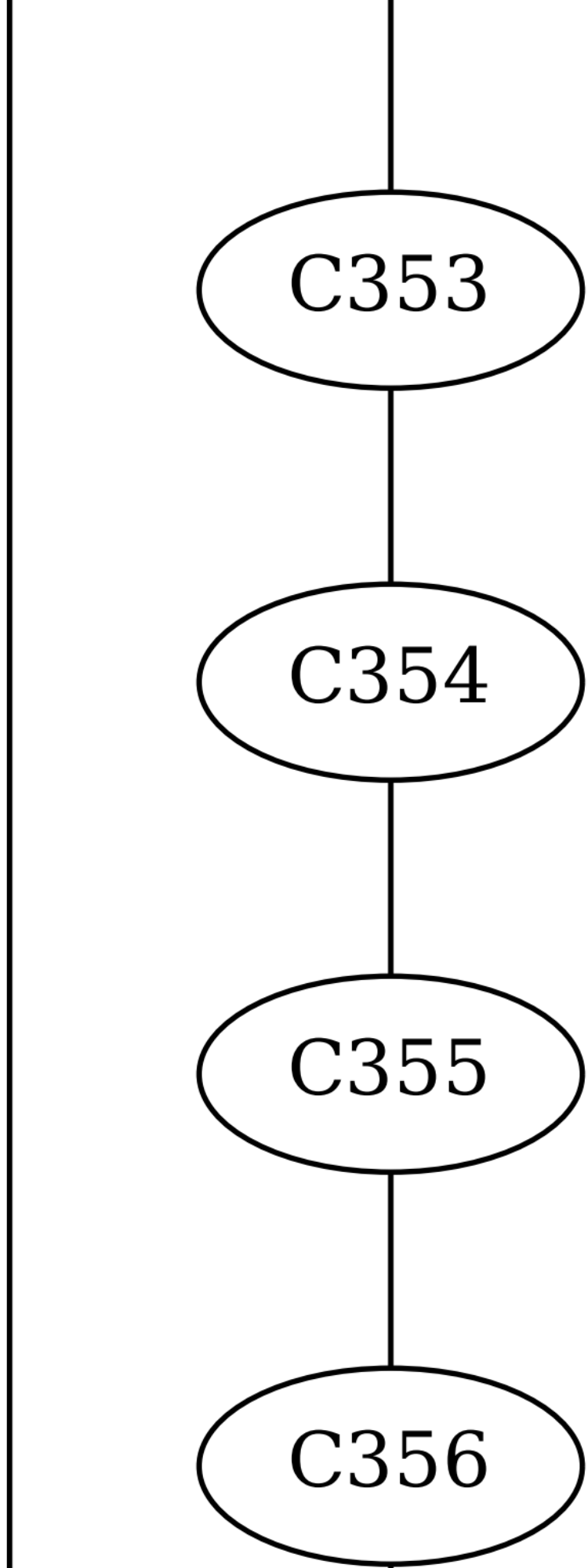
C353
C354
C355
C356

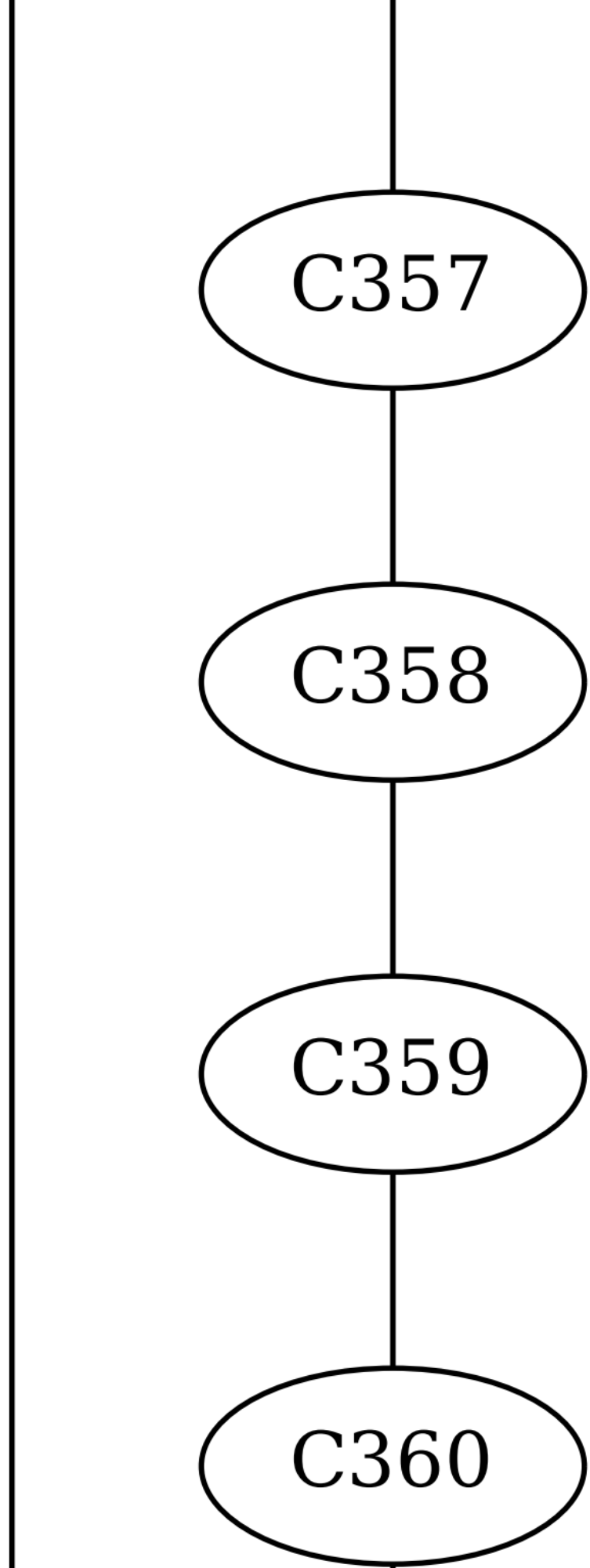
C357
C358
C359
C360

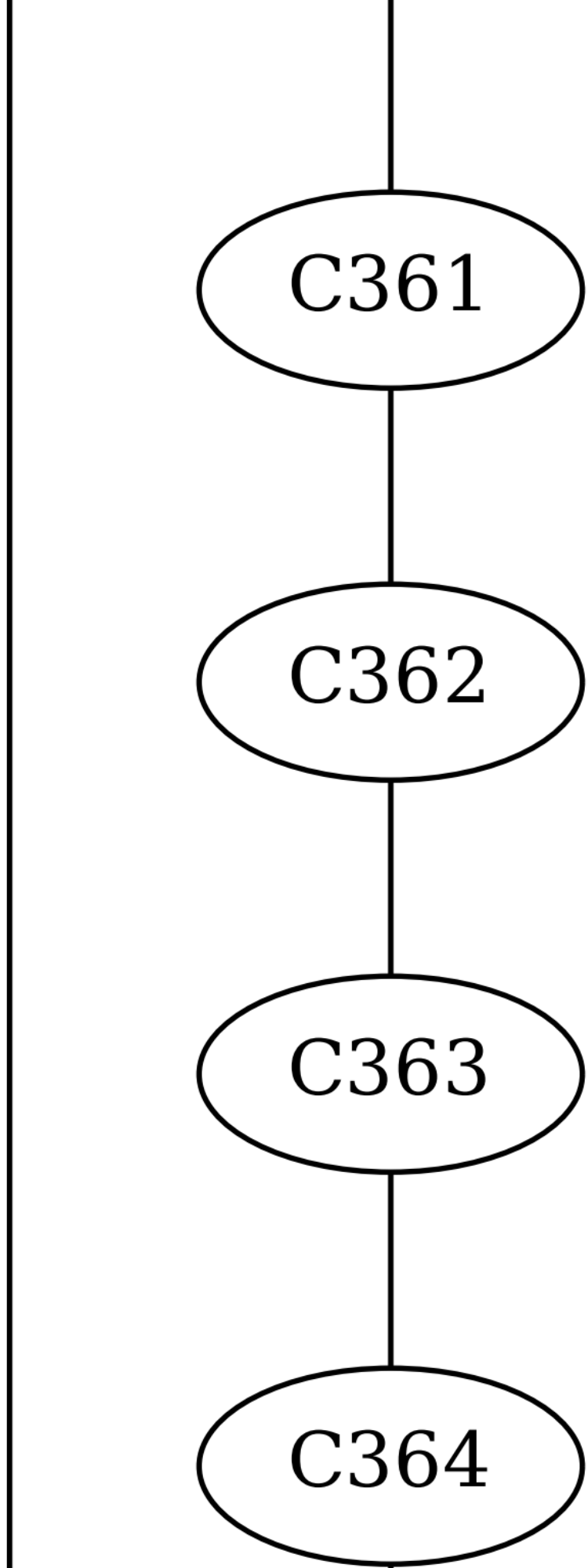
C361
C362
C363
C364

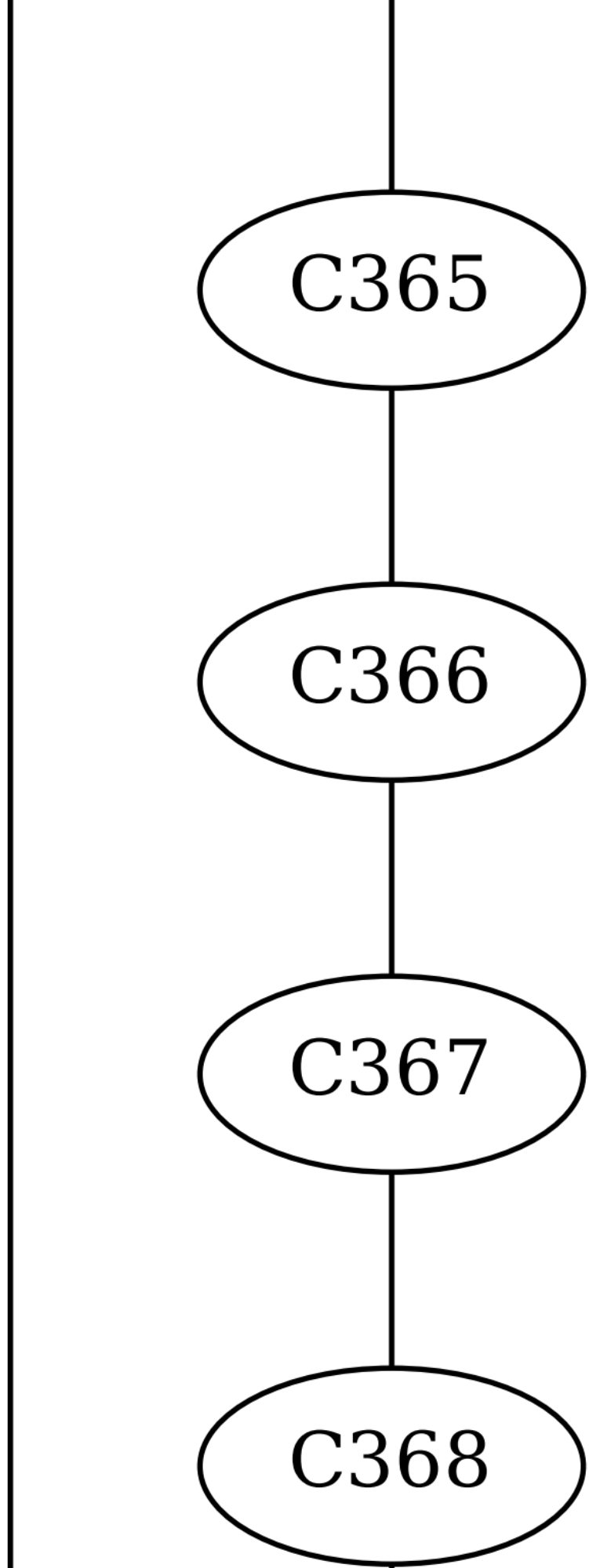
C365
C366
C367
C368

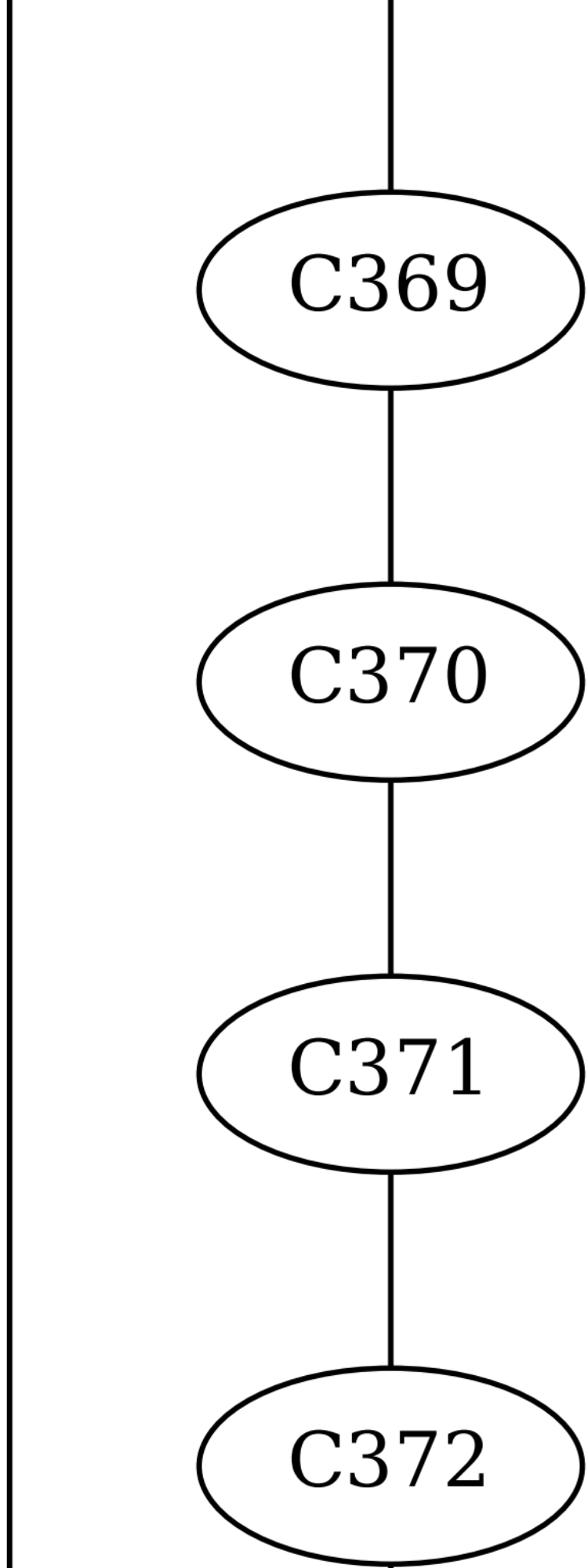
C369
C370
C371
C372

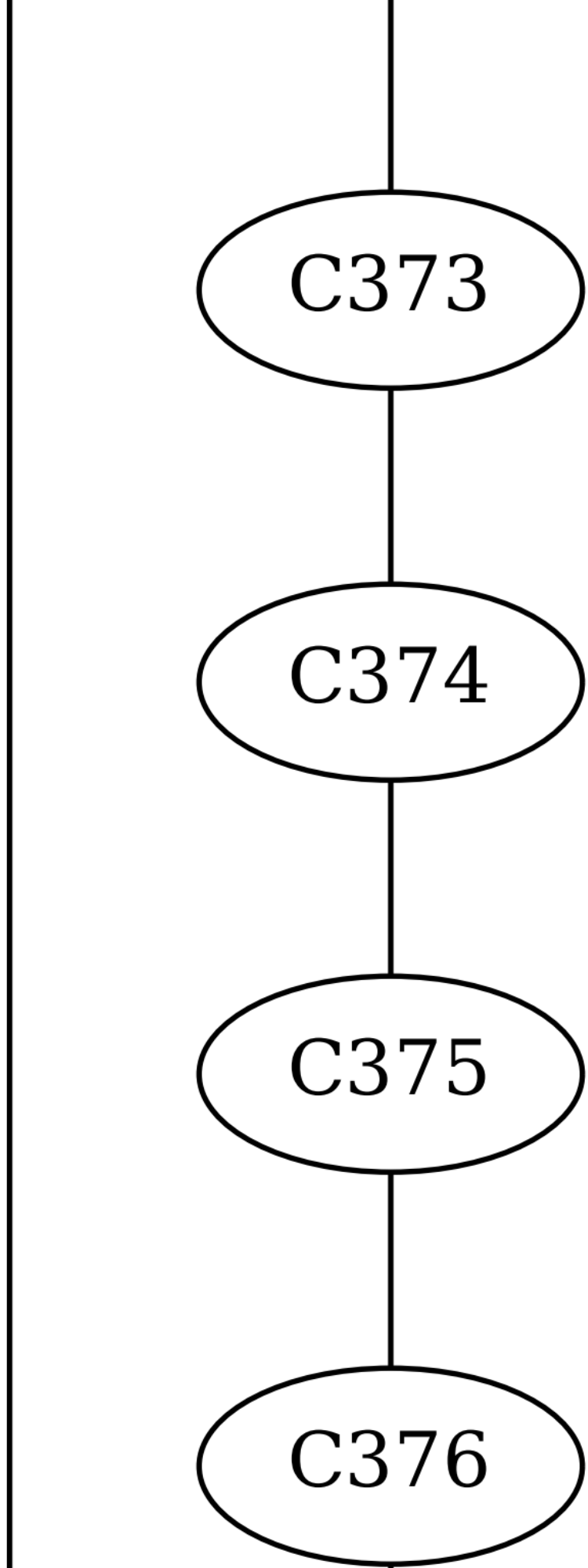
C373
C374
C375
C376

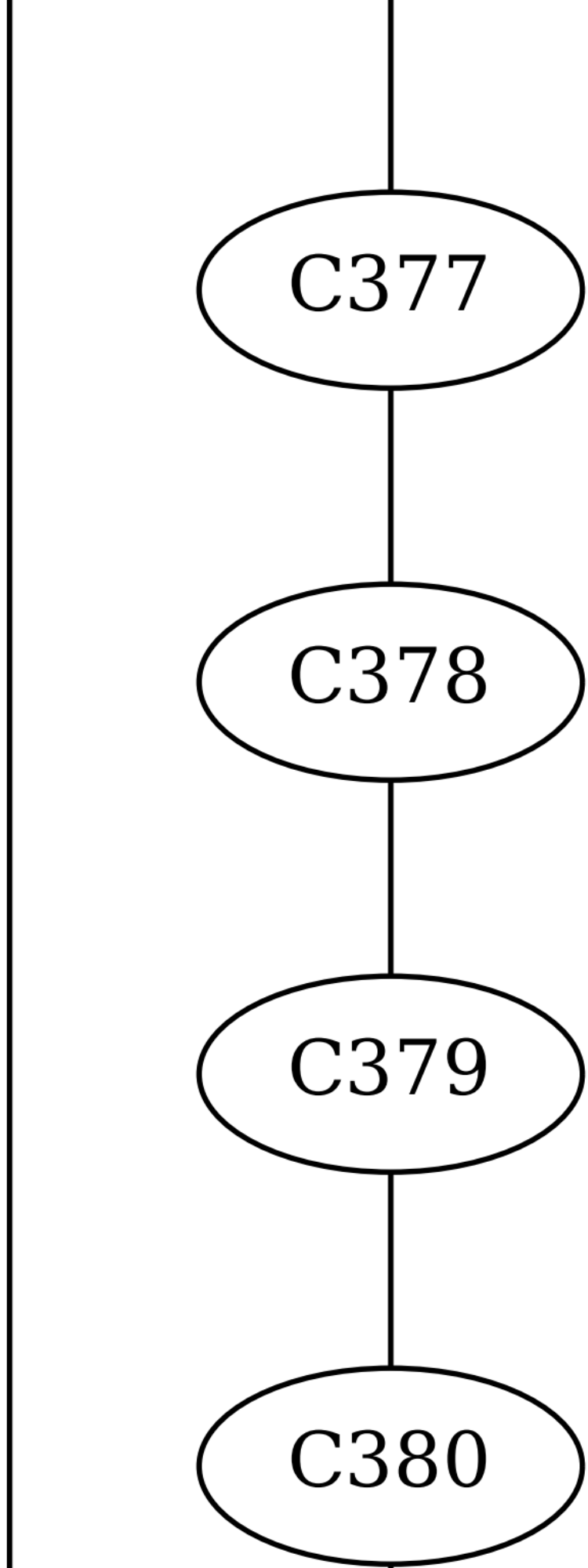
C377
C378
C379
C380

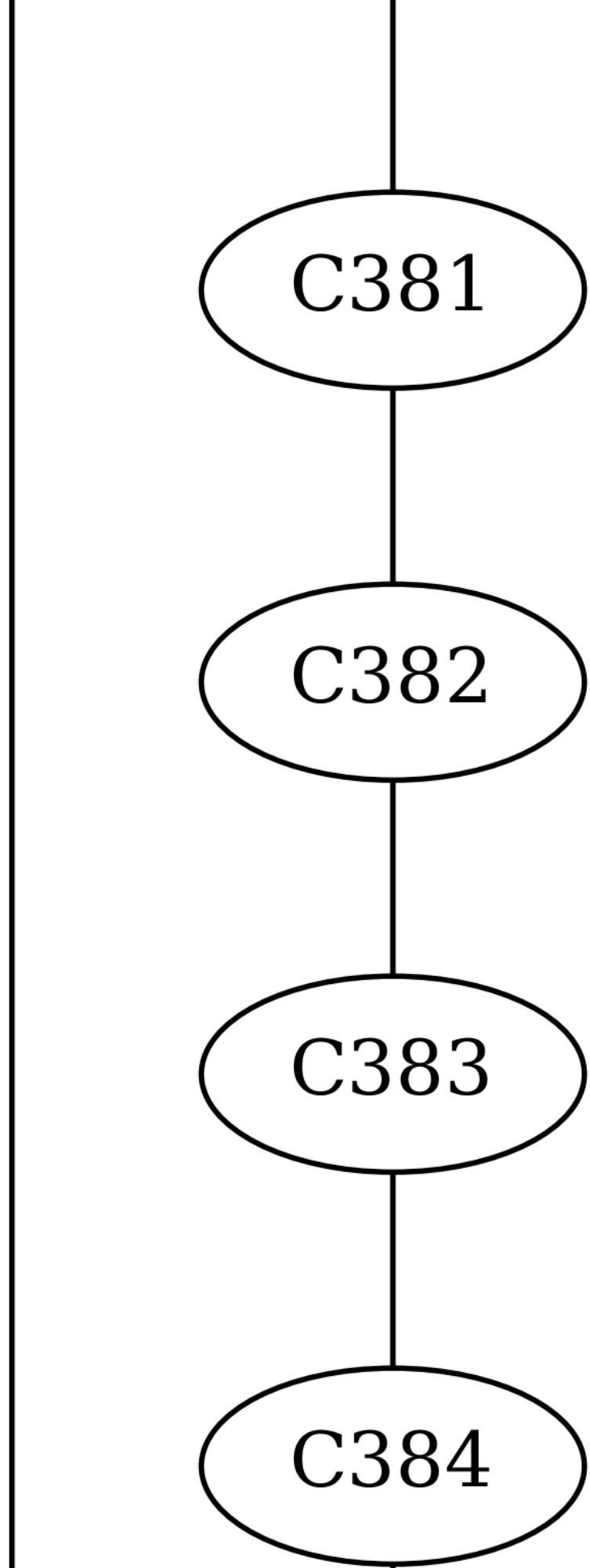
C381
C382
C383
C384

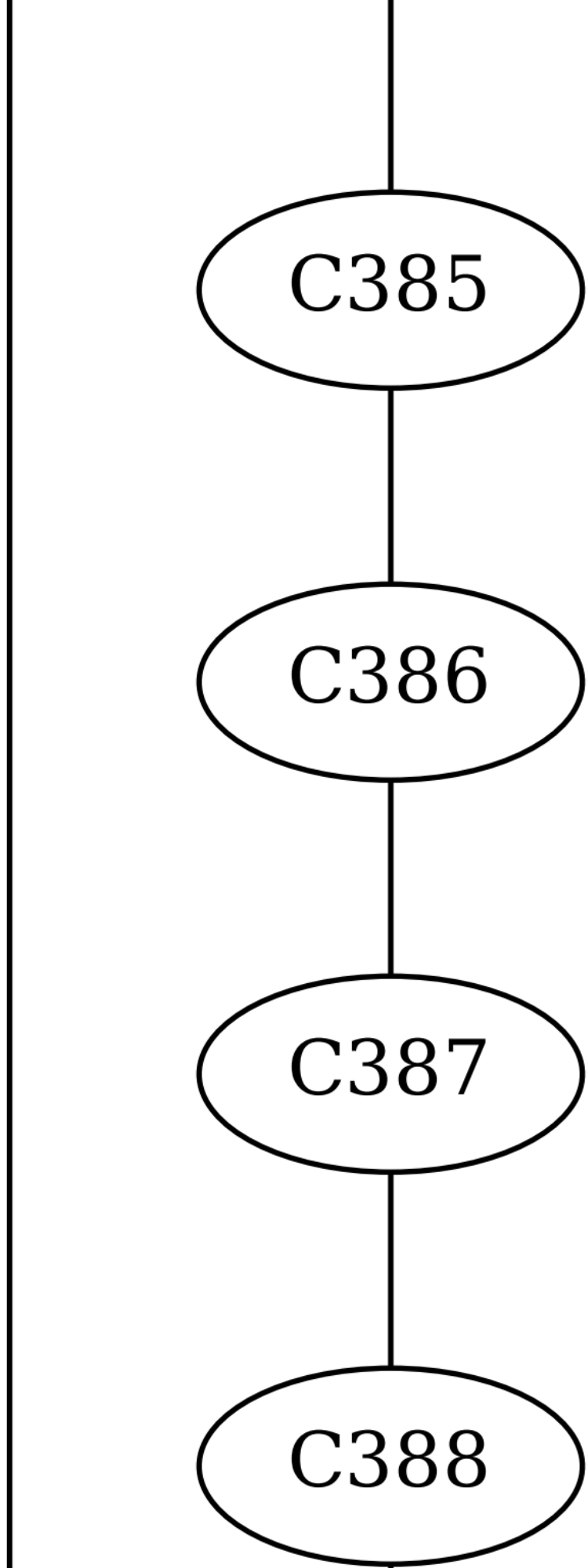
C385
C386
C387
C388

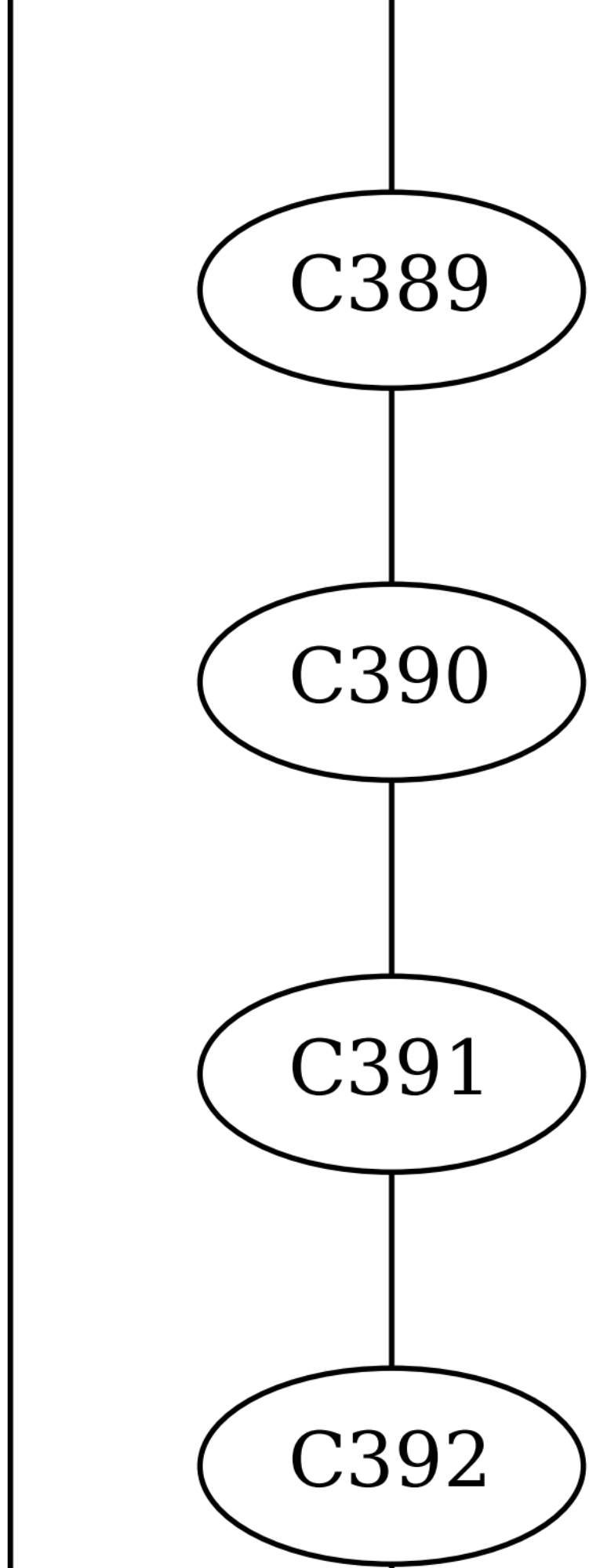
C389
C390
C391
C392

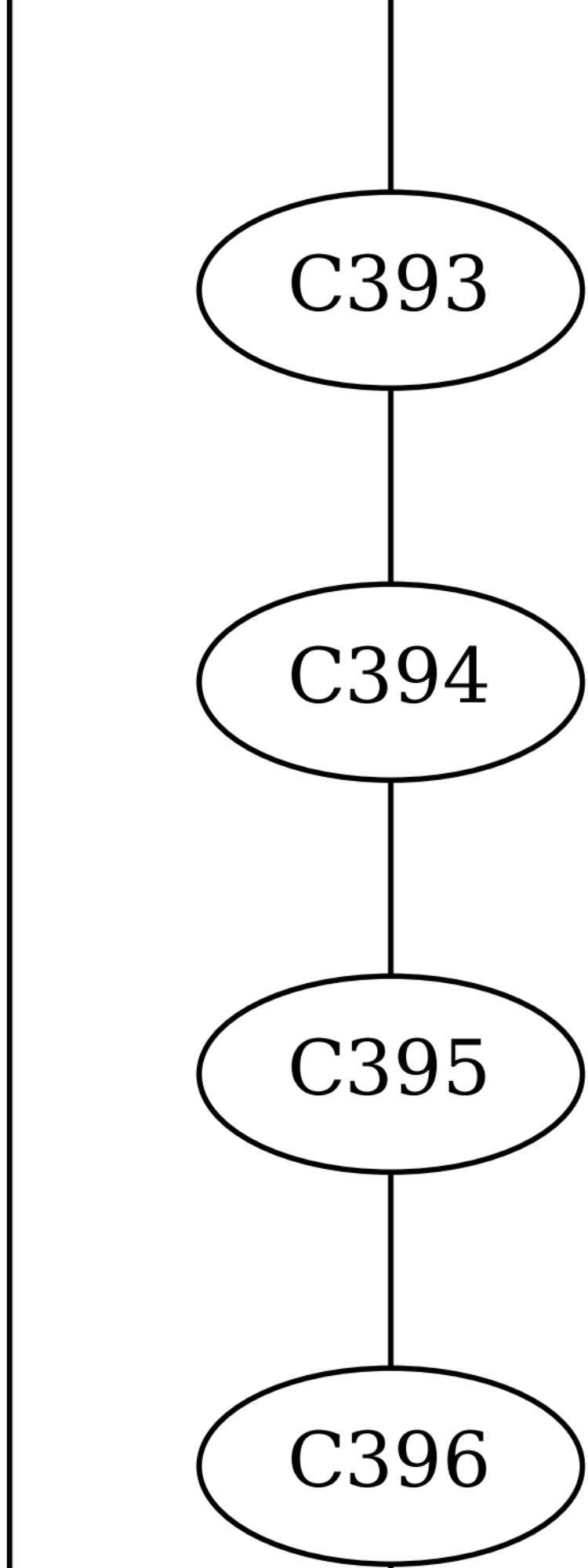
C393
C394
C395
C396

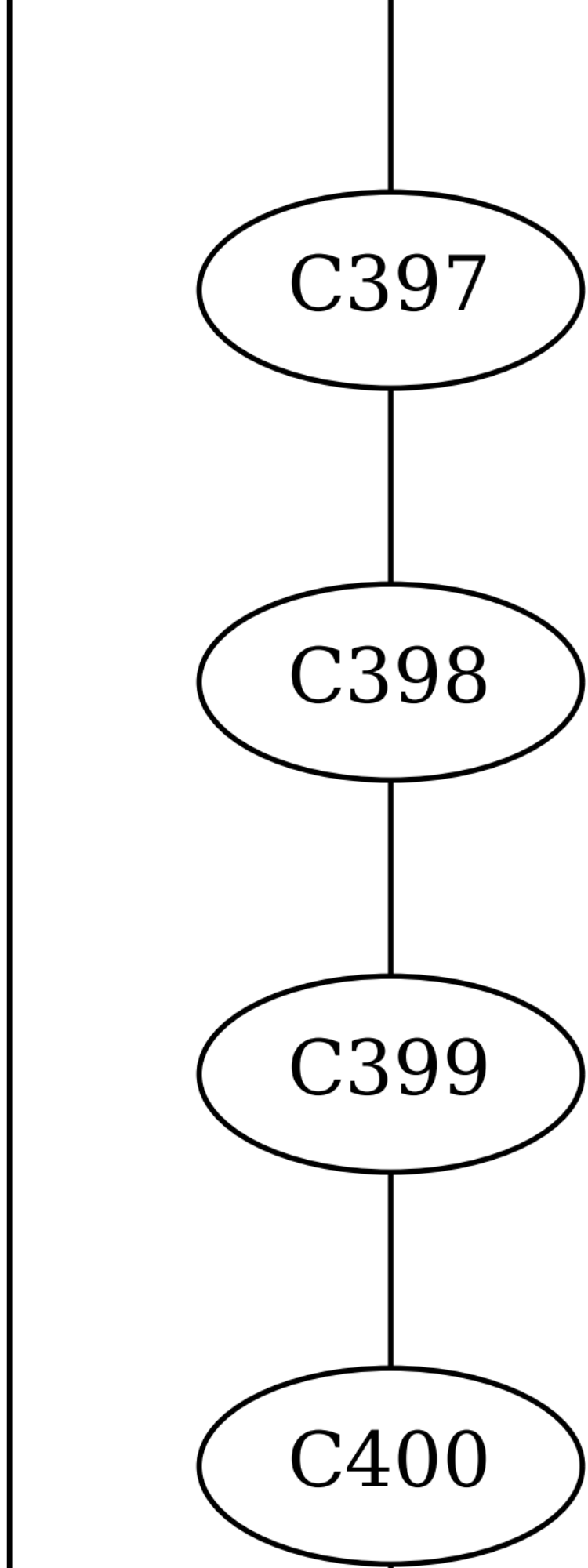
C397
C398
C399
C400

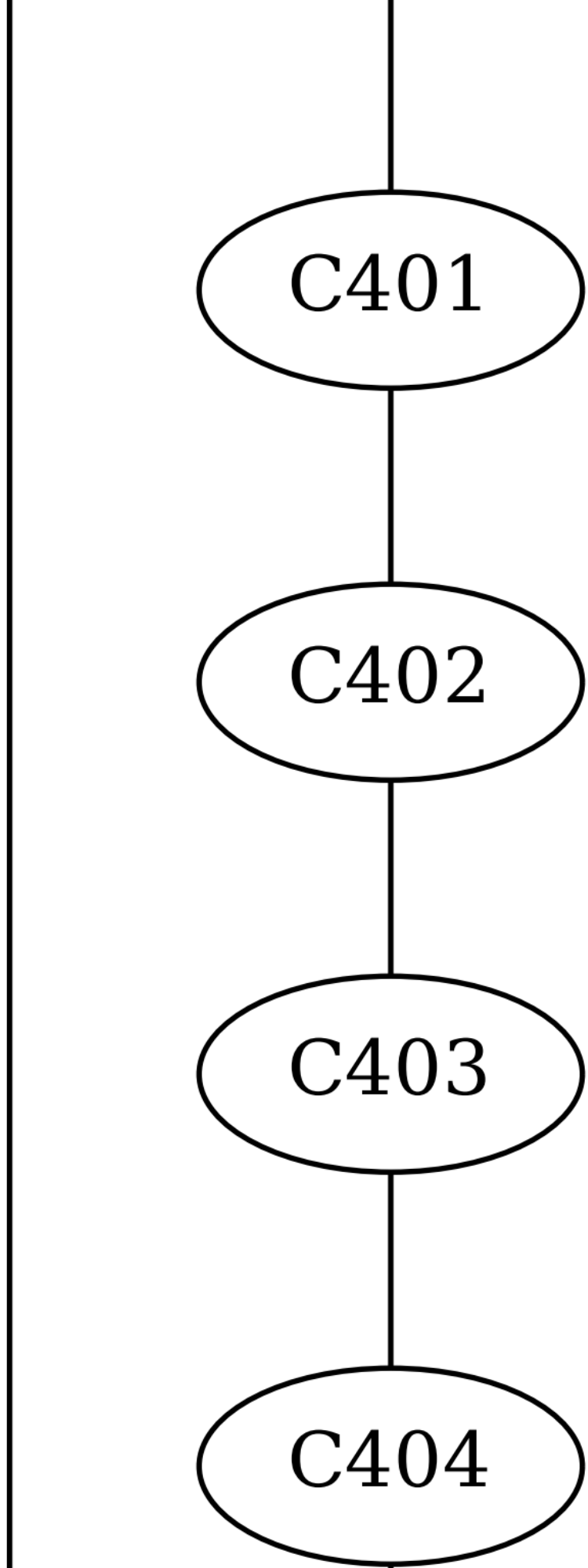
C401
C402
C403
C404

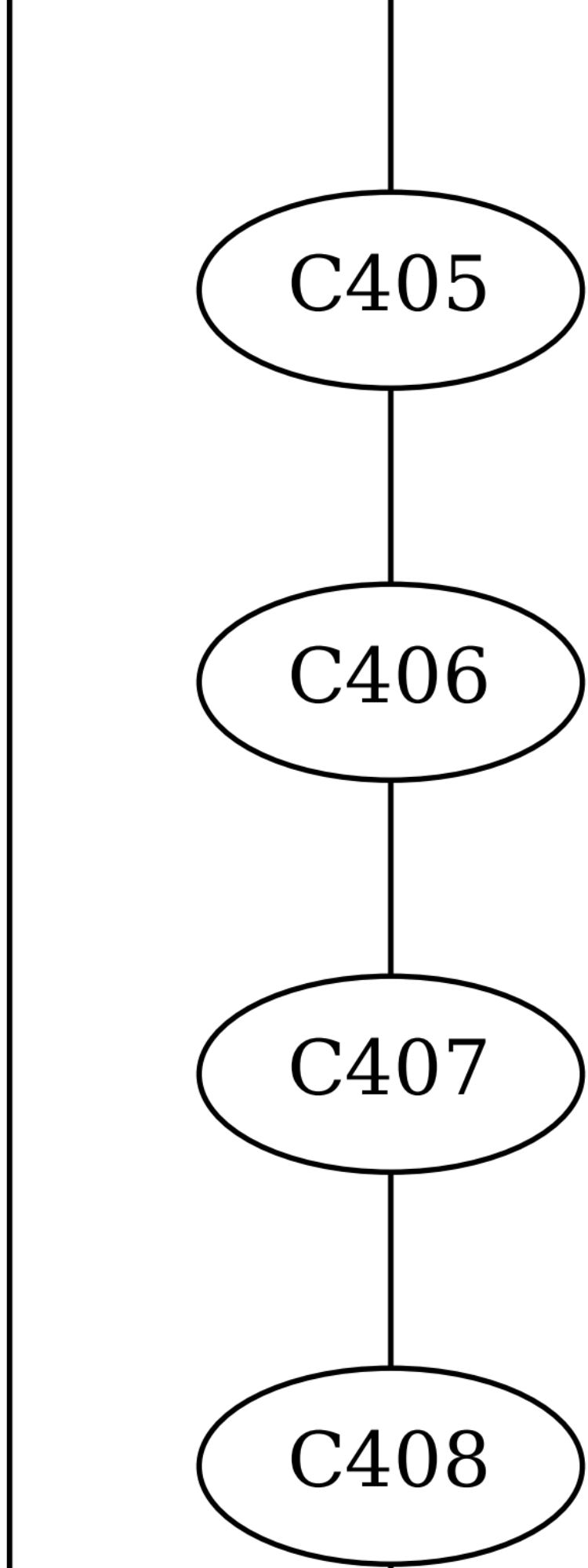
C405
C406
C407
C408

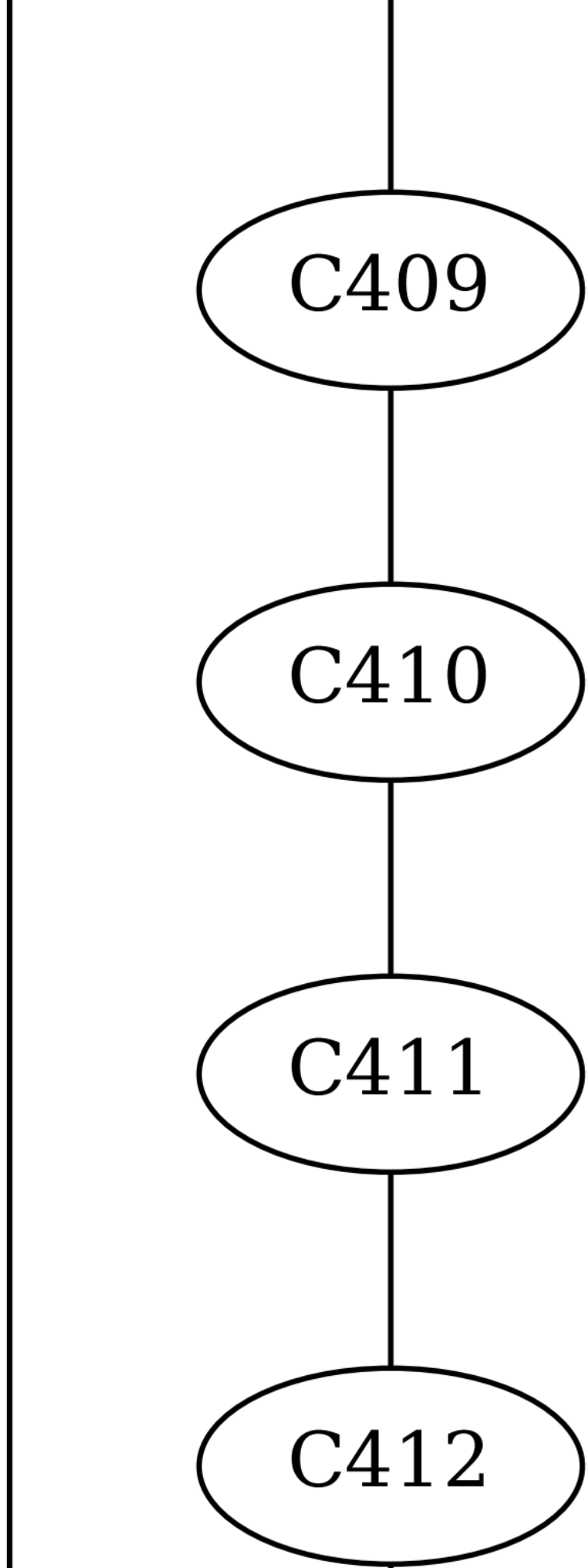
C409
C410
C411
C412

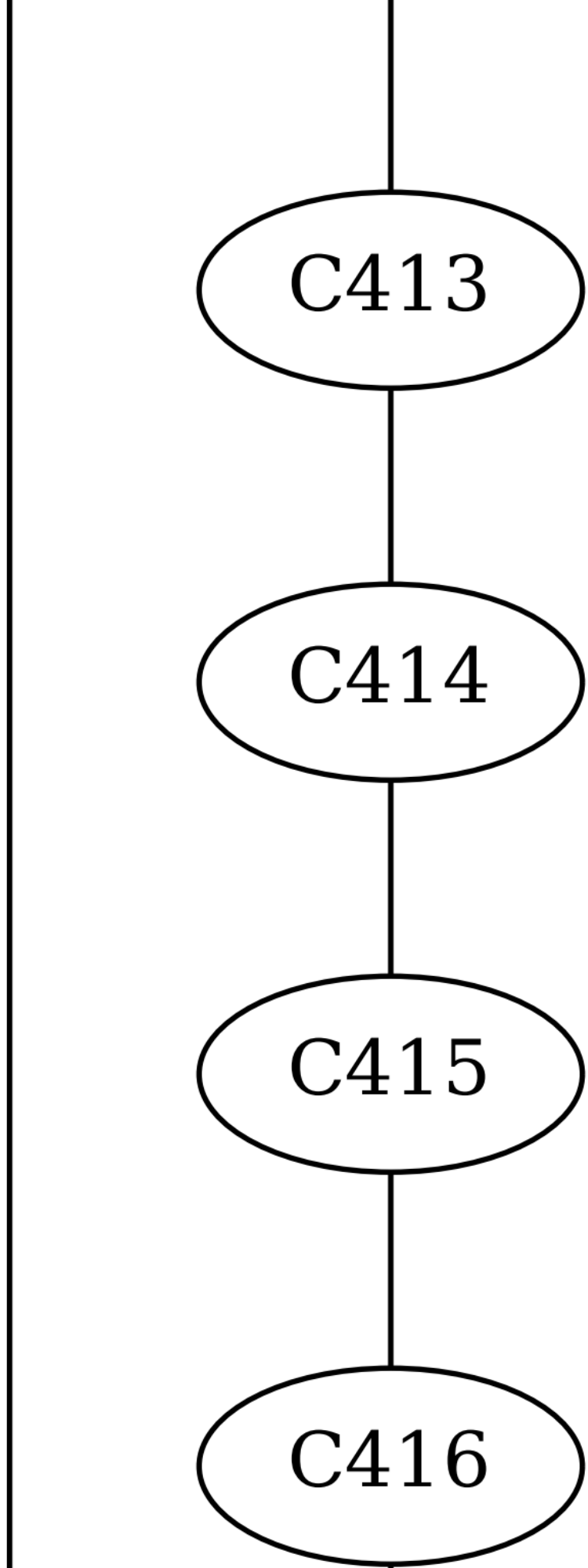
C413
C414
C415
C416

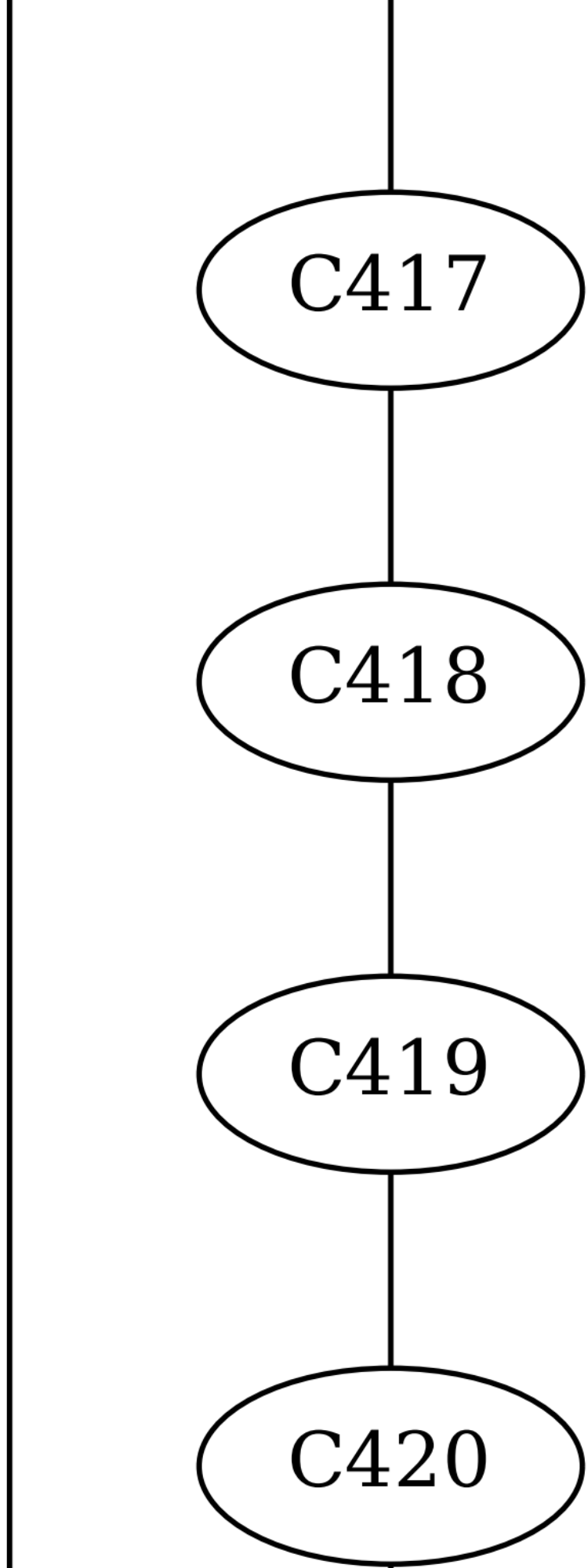
C417
C418
C419
C420

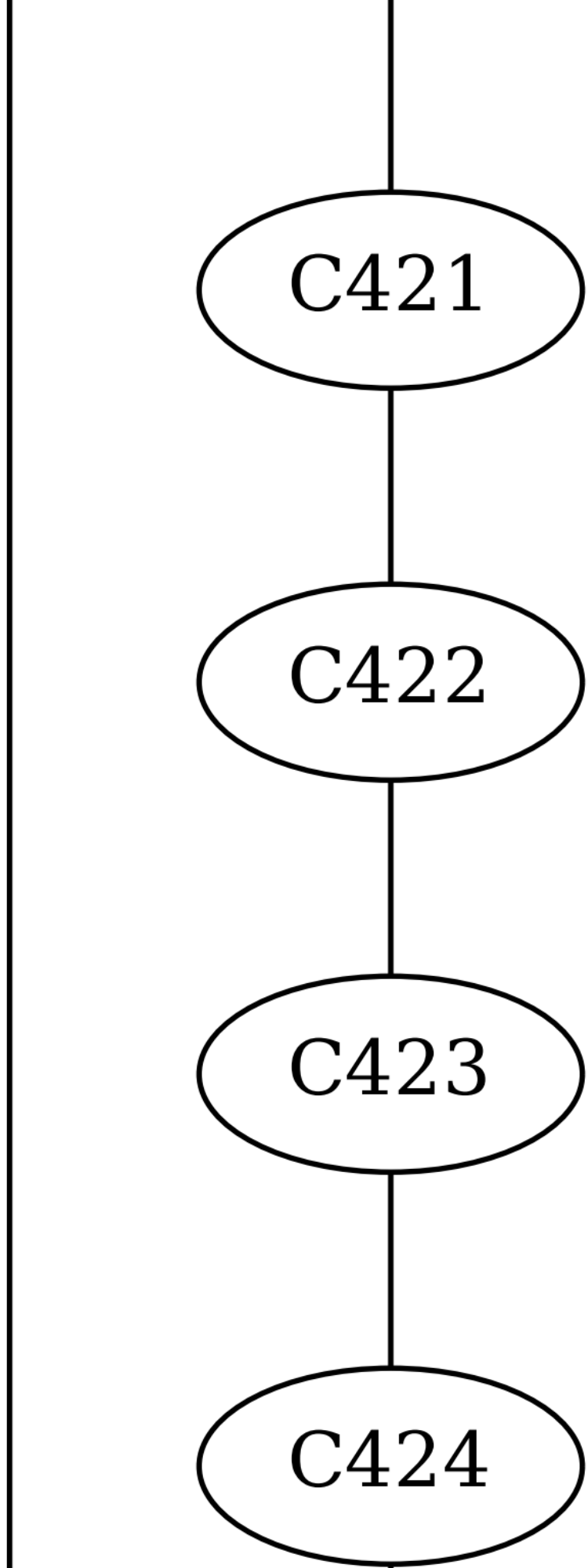
C421
C422
C423
C424

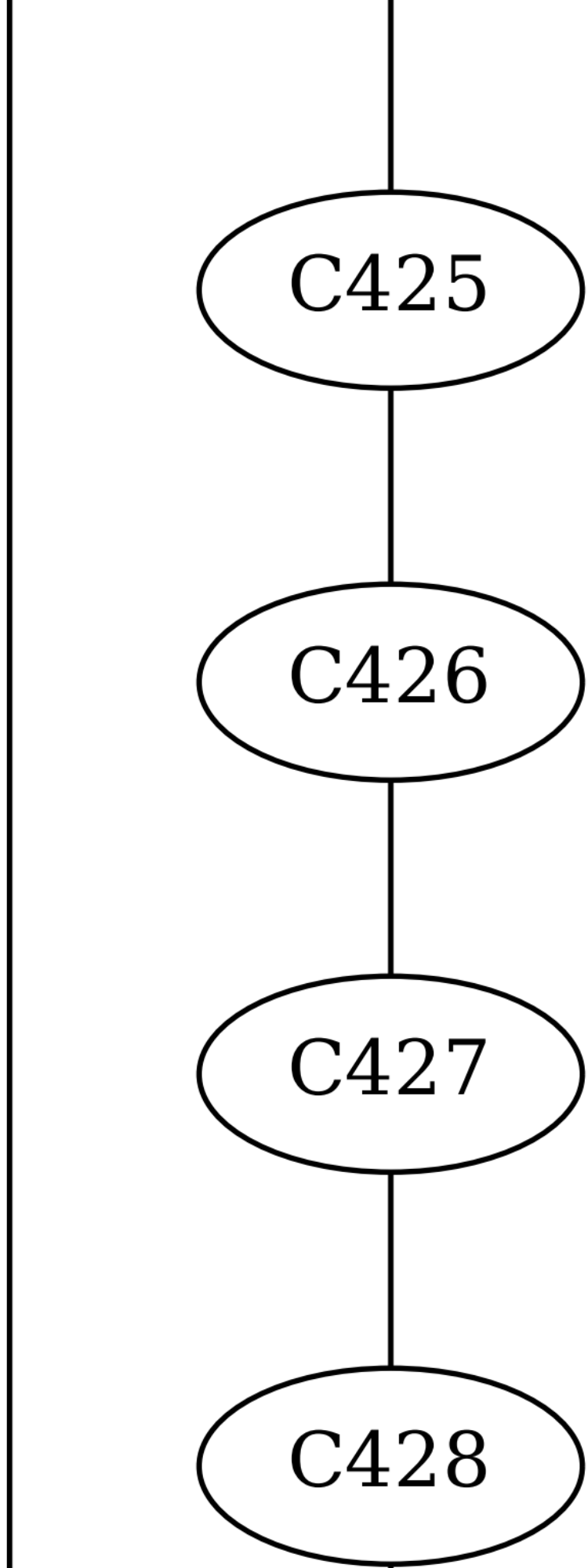
C425
C426
C427
C428

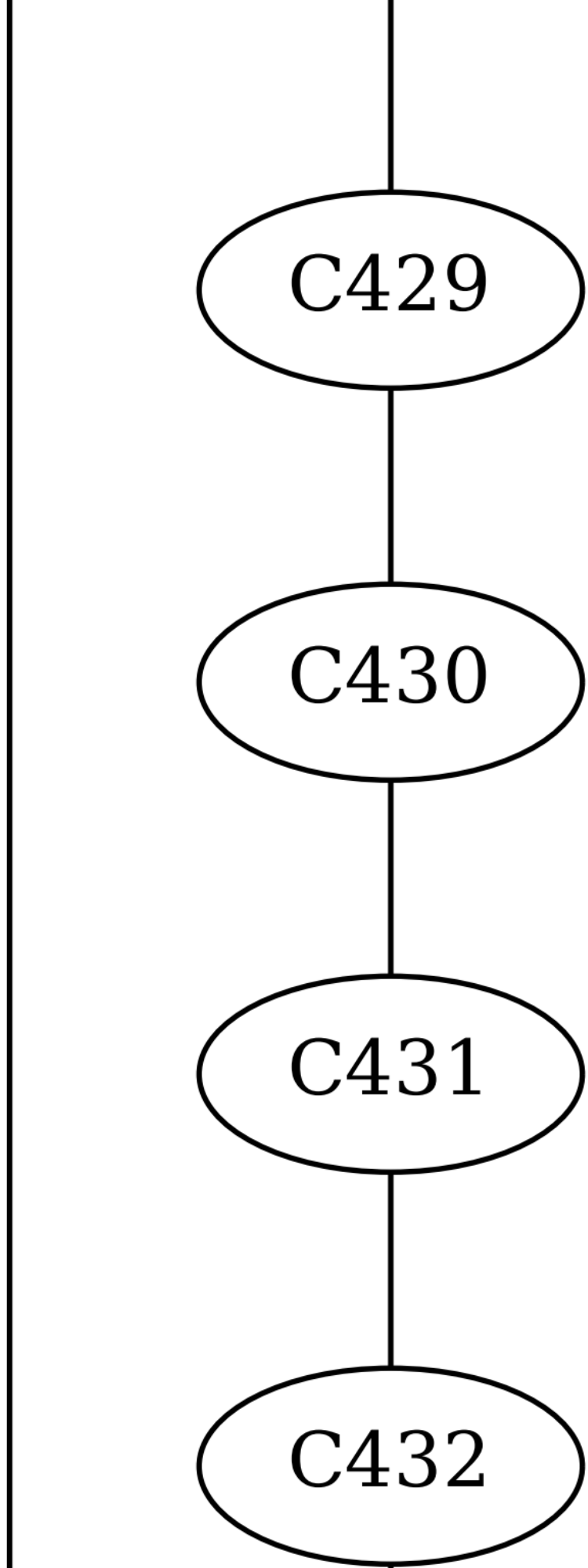
C429
C430
C431
C432

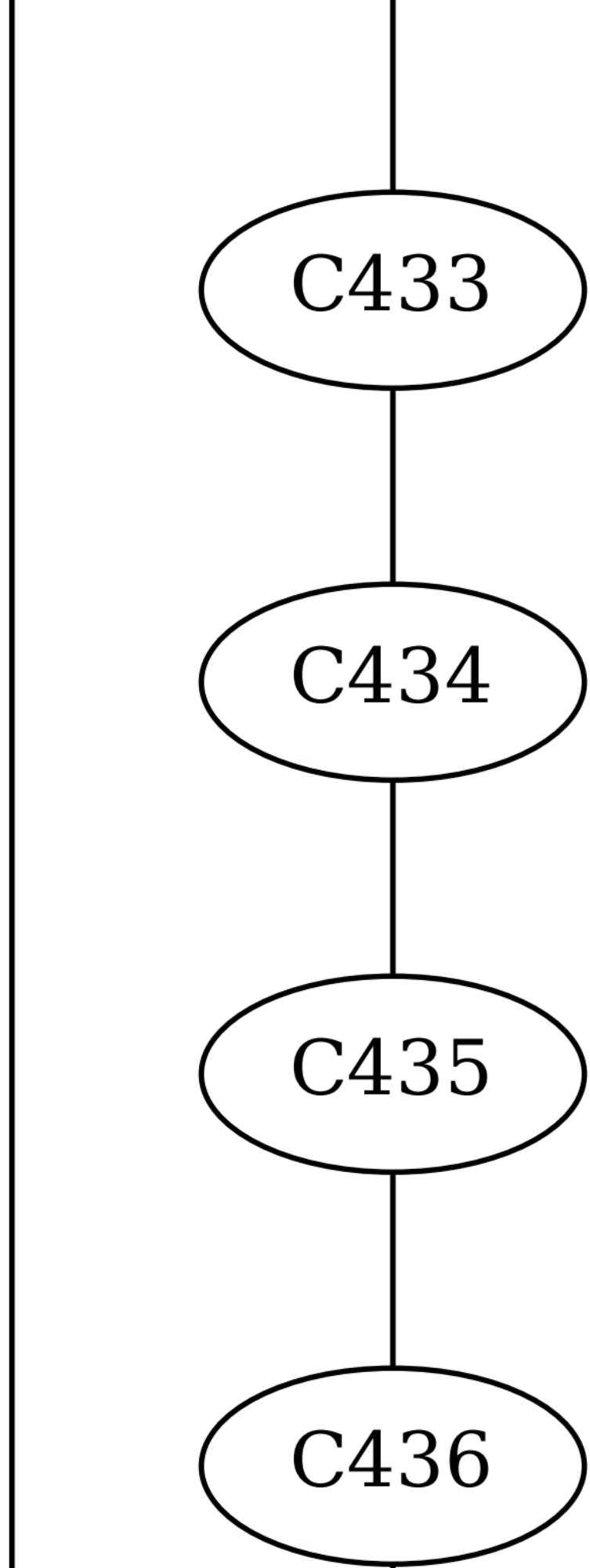
C433
C434
C435
C436

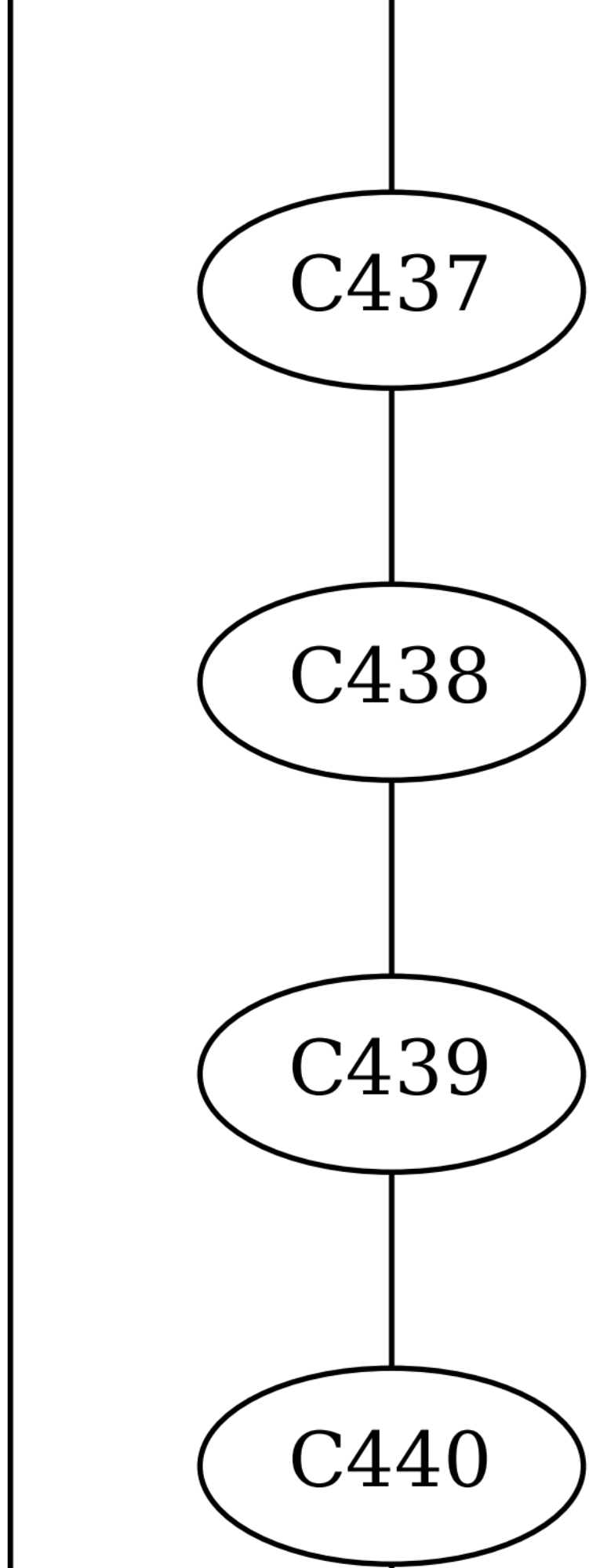
C437
C438
C439
C440

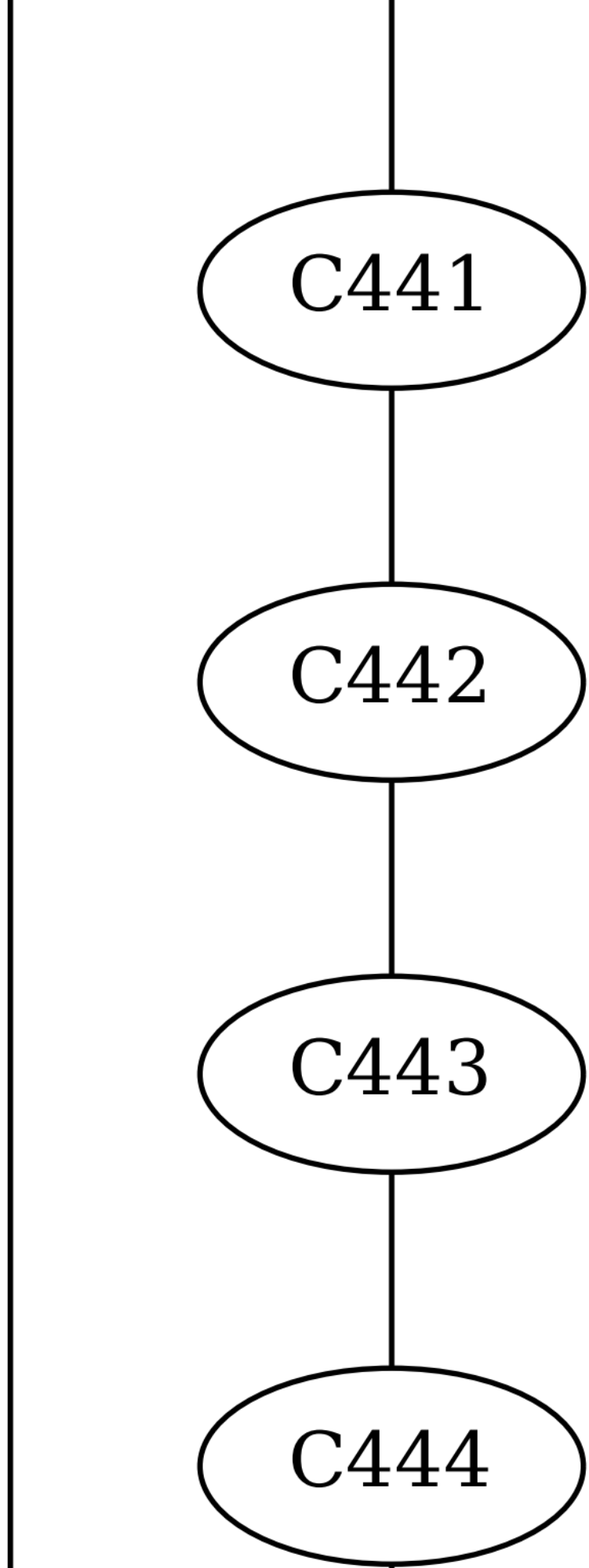
C441
C442
C443
C444

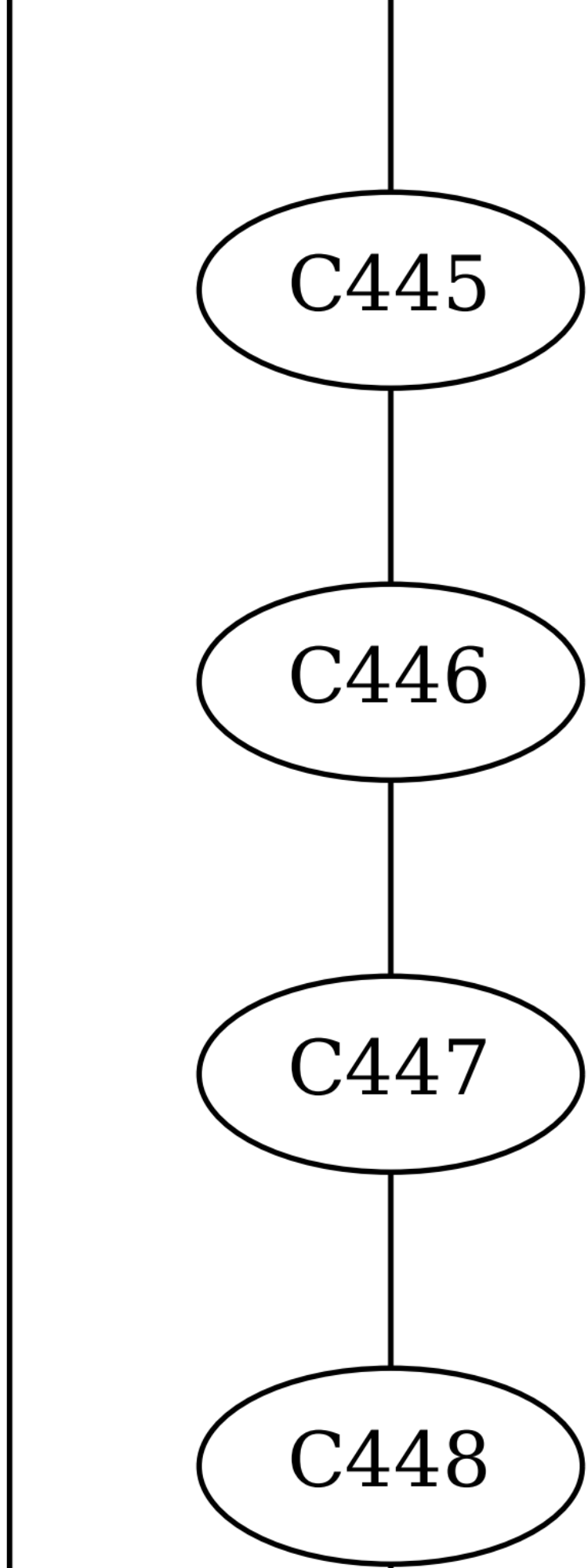
C445
C446
C447
C448

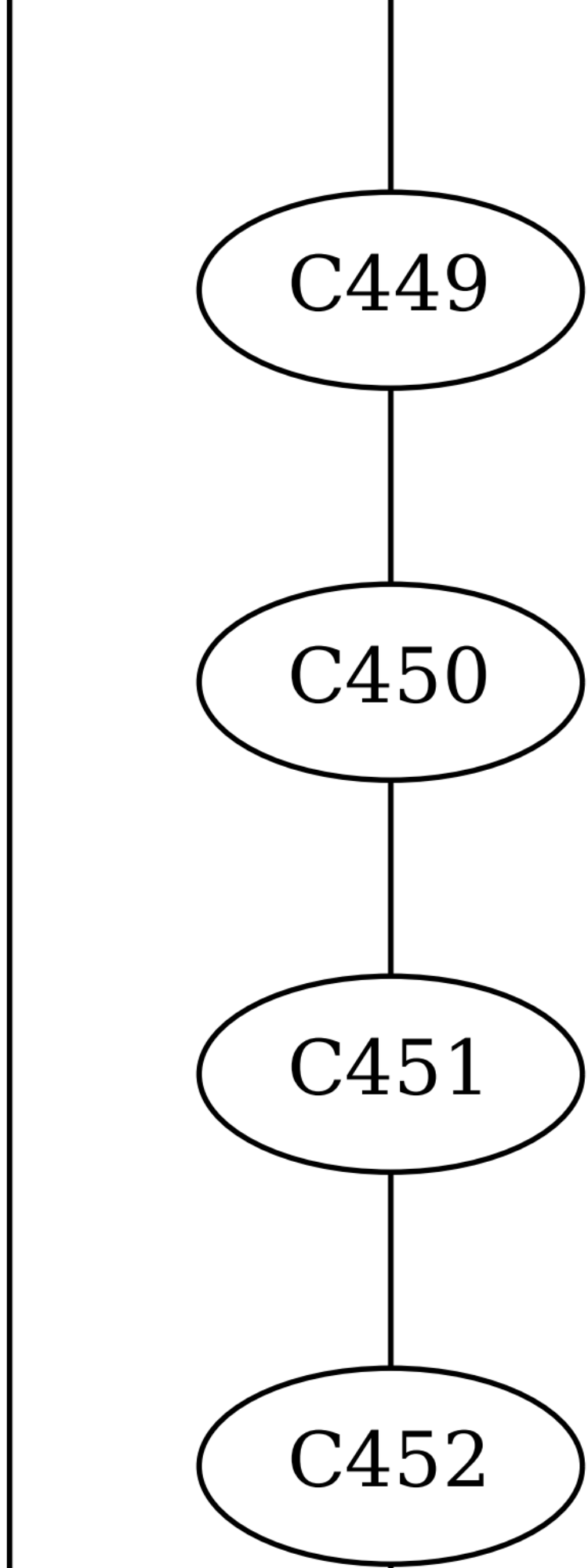
C449
C450
C451
C452

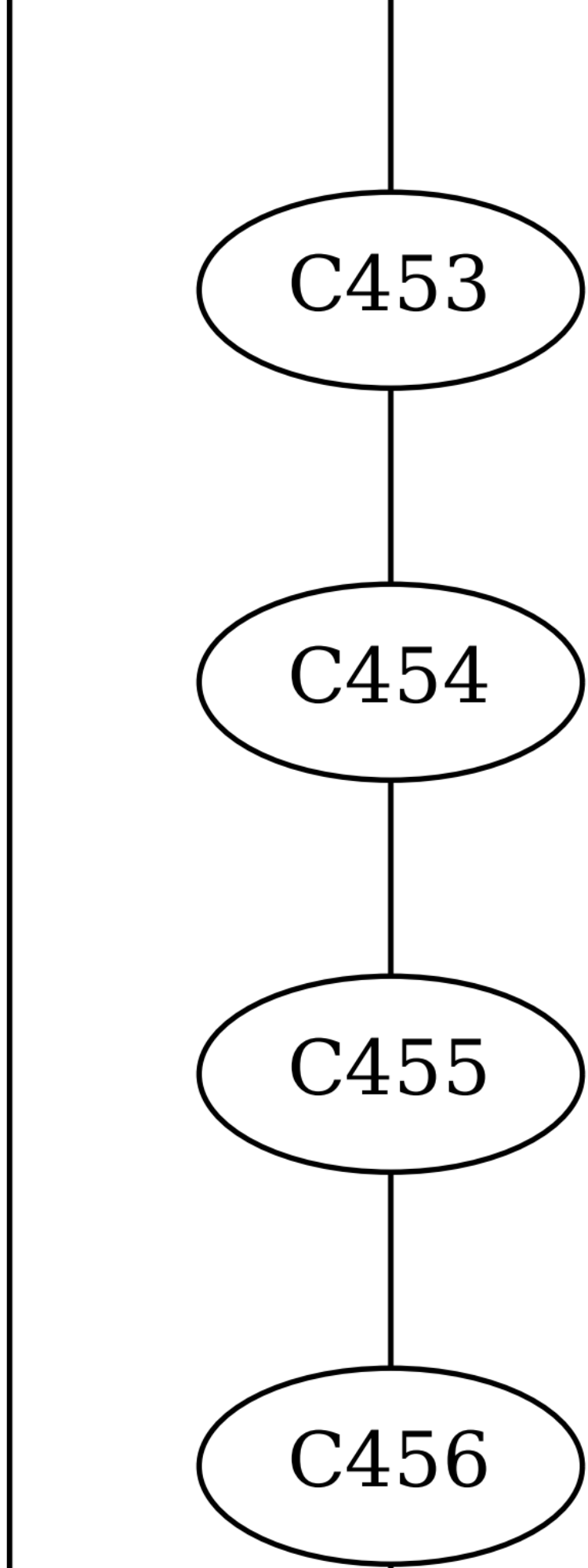
C453
C454
C455
C456

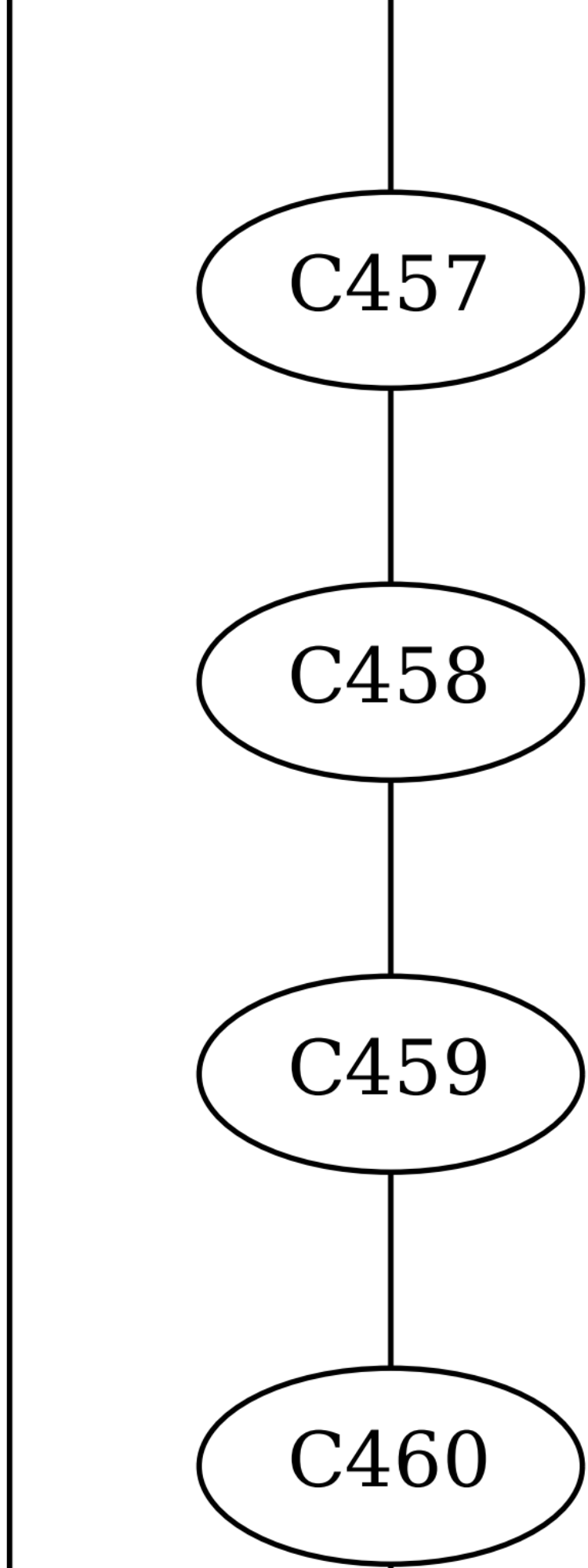
C457
C458
C459
C460

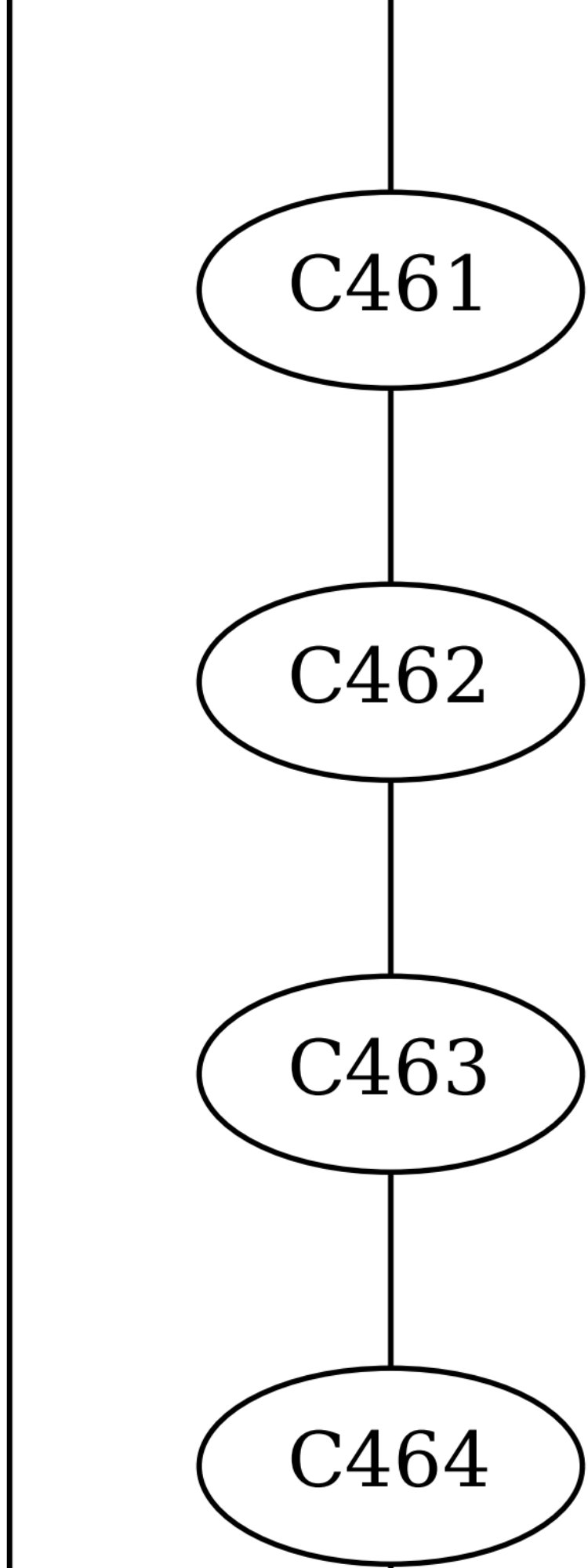
C461
C462
C463
C464

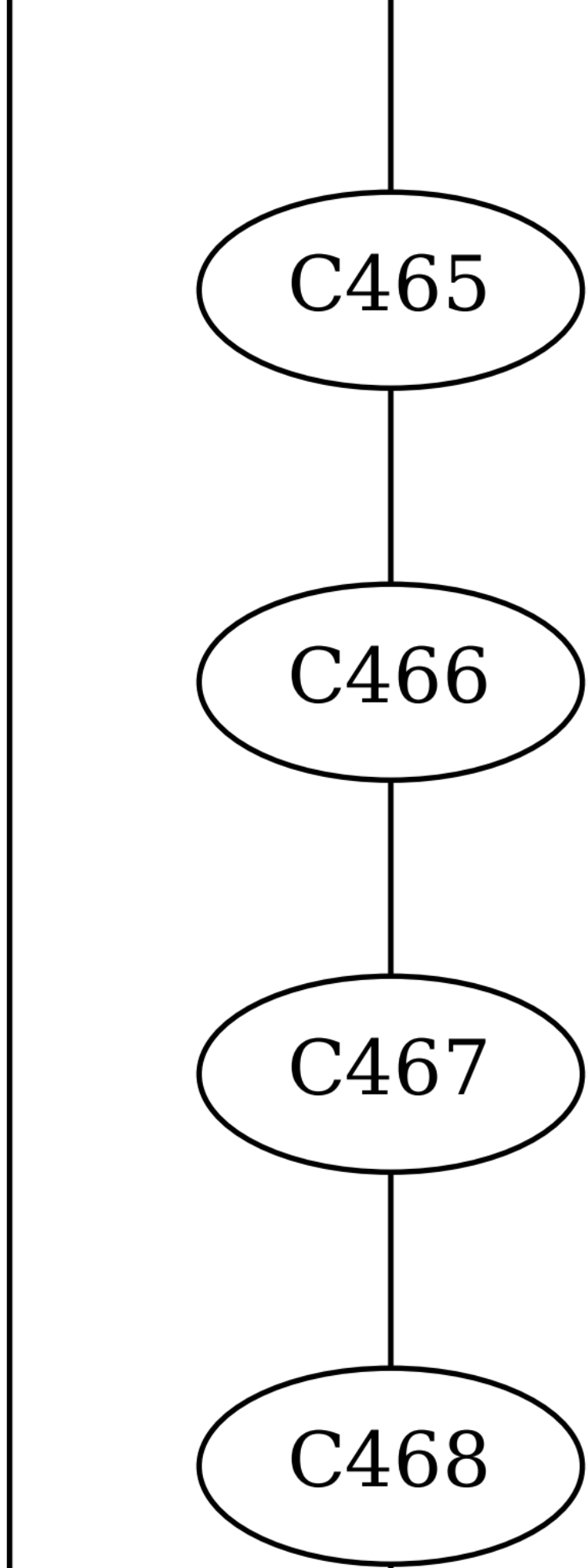
C465
C466
C467
C468

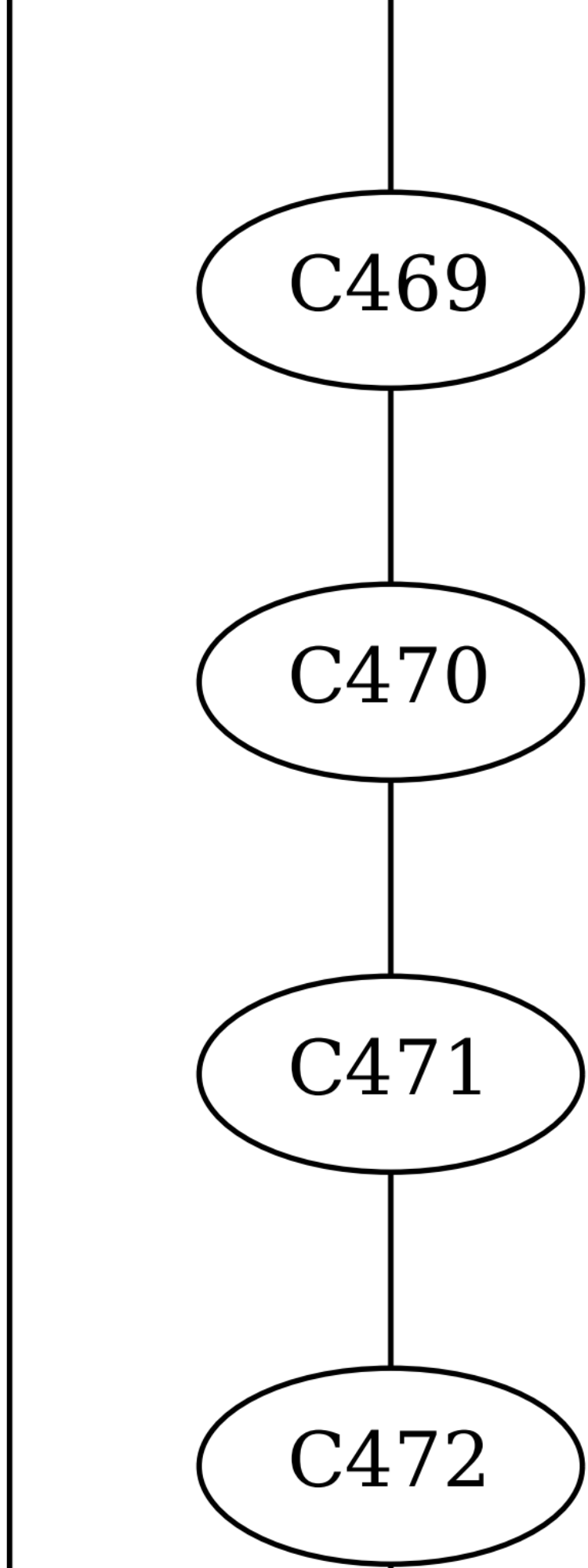
C469
C470
C471
C472

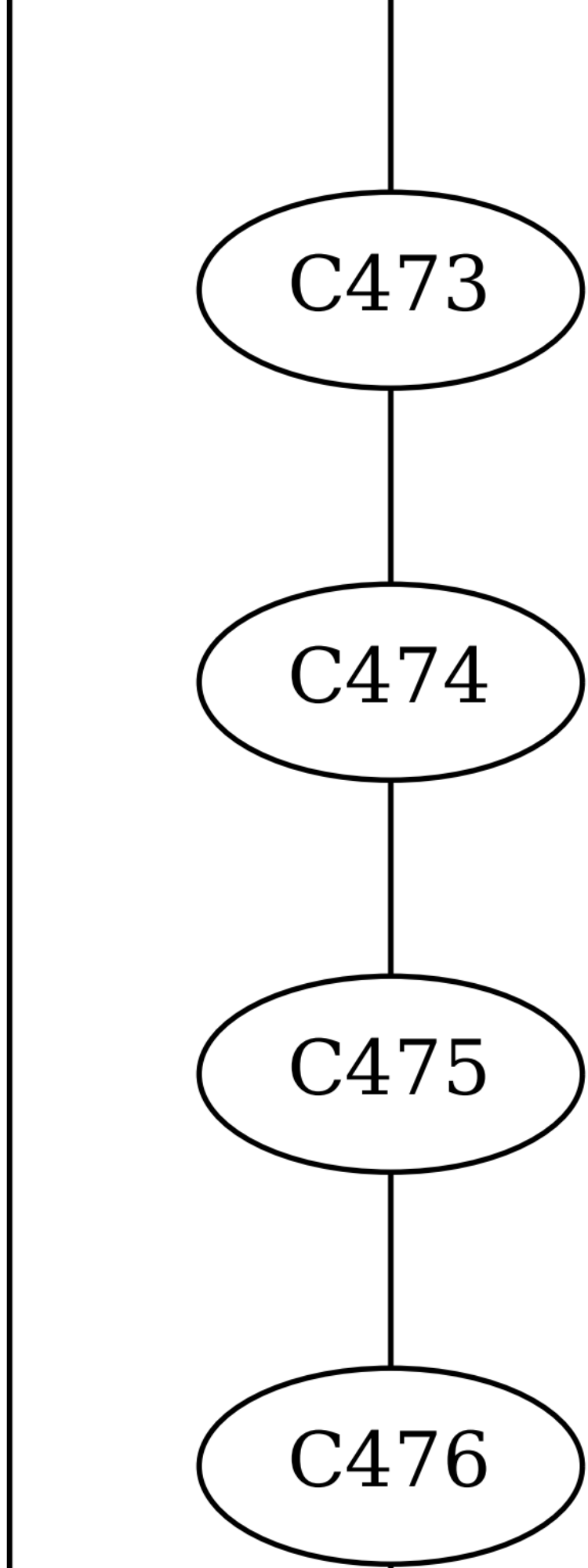
C473
C474
C475
C476

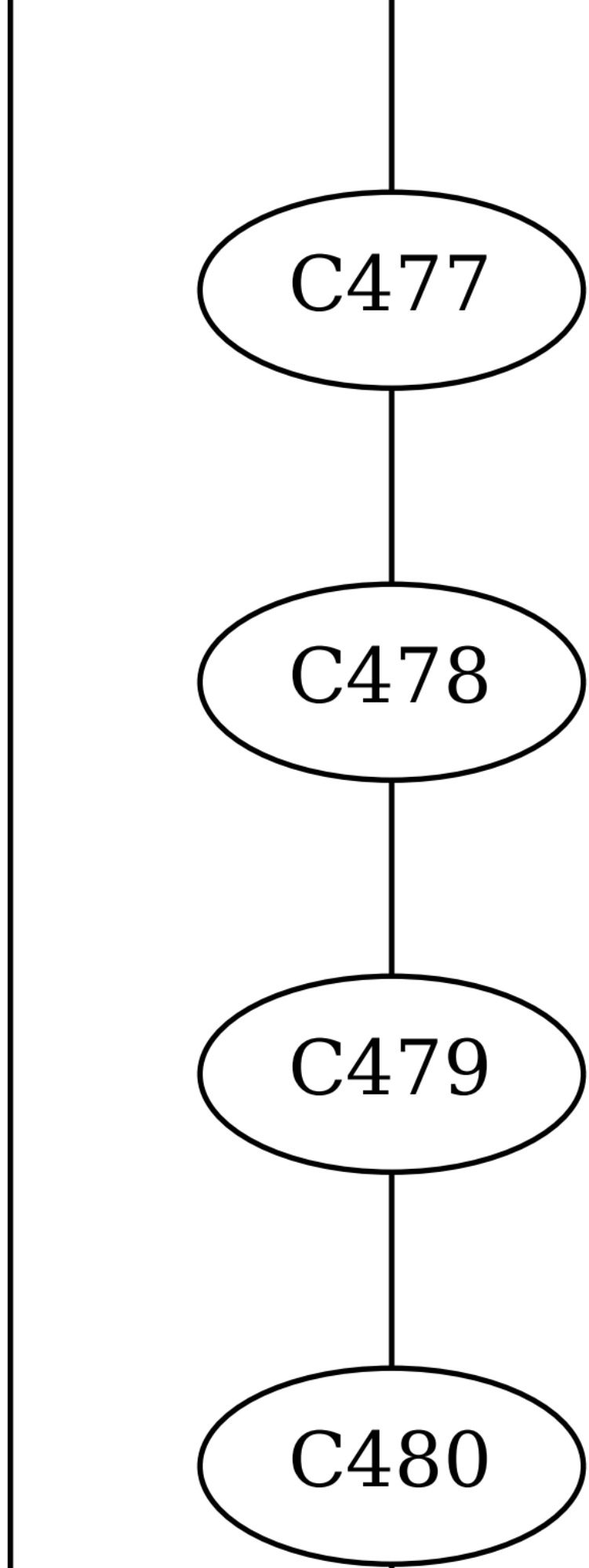
C477
C478
C479
C480

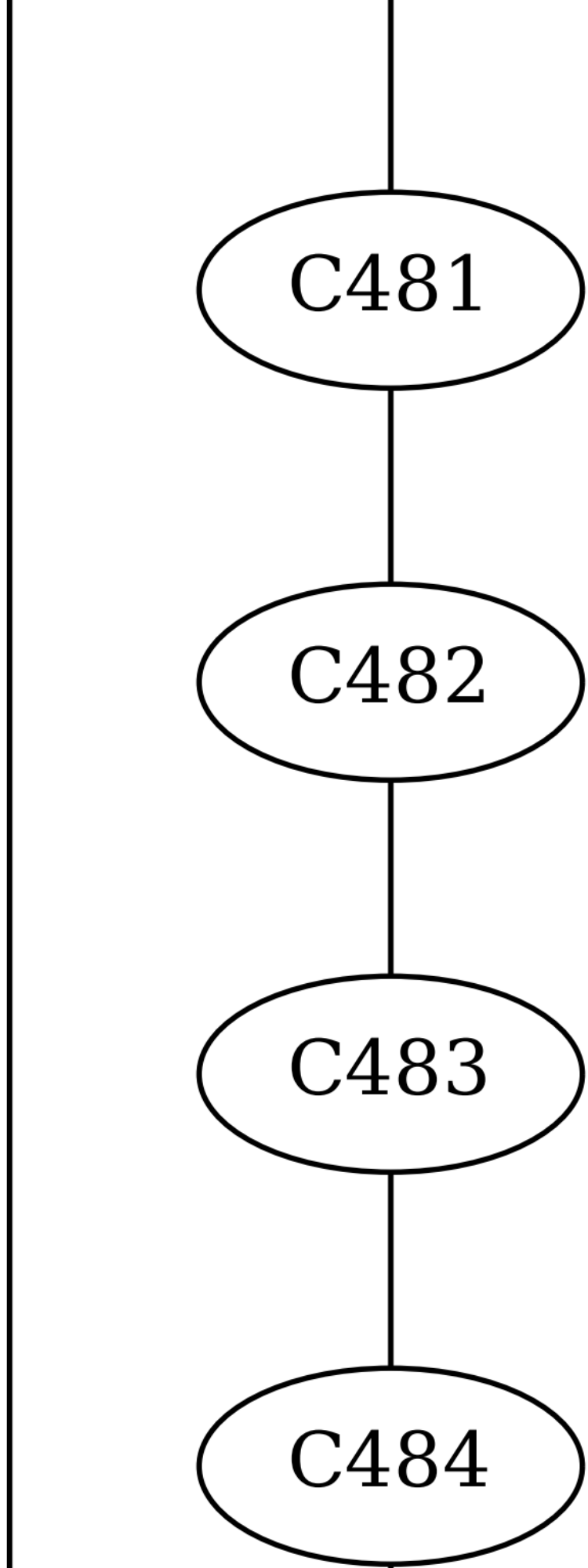
C481
C482
C483
C484

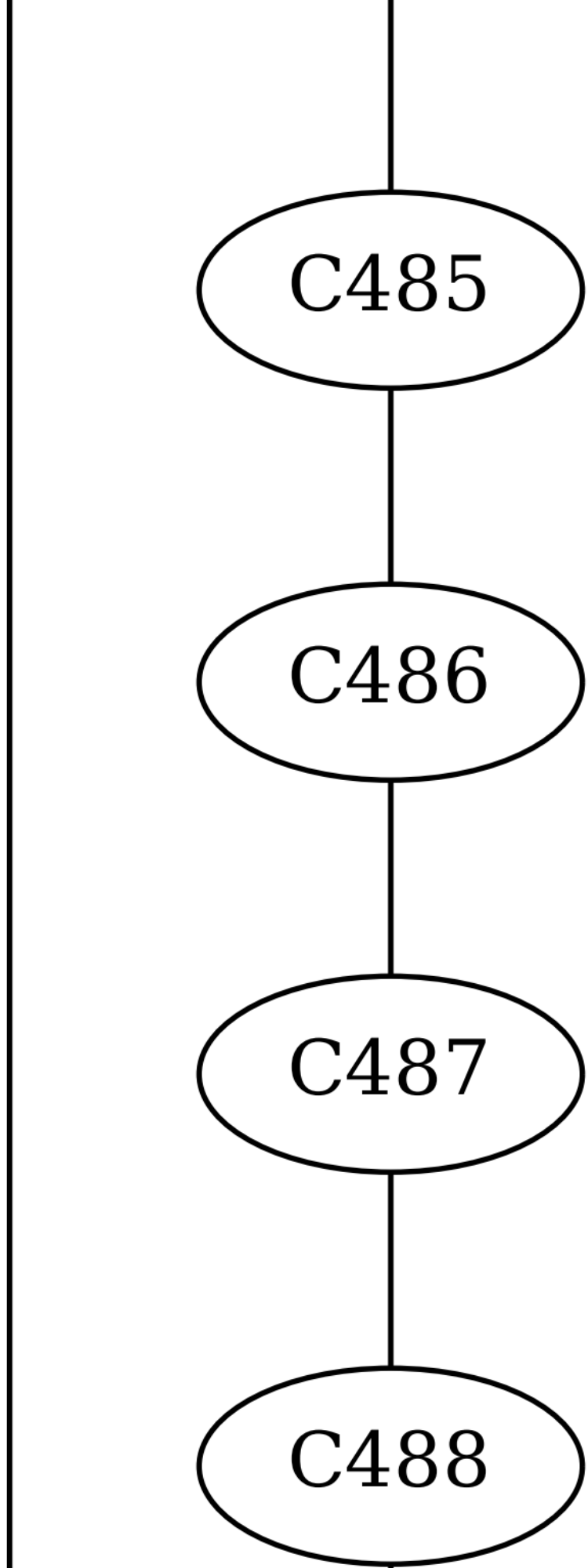
C485
C486
C487
C488

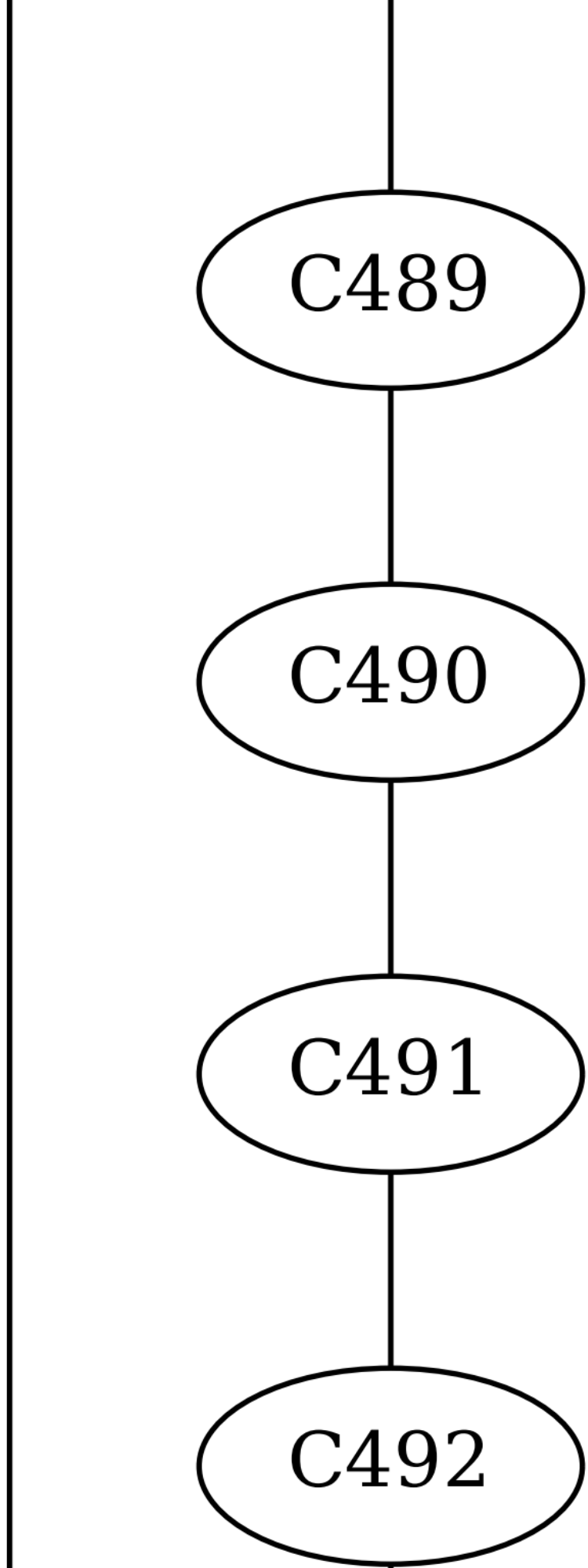
C489
C490
C491
C492

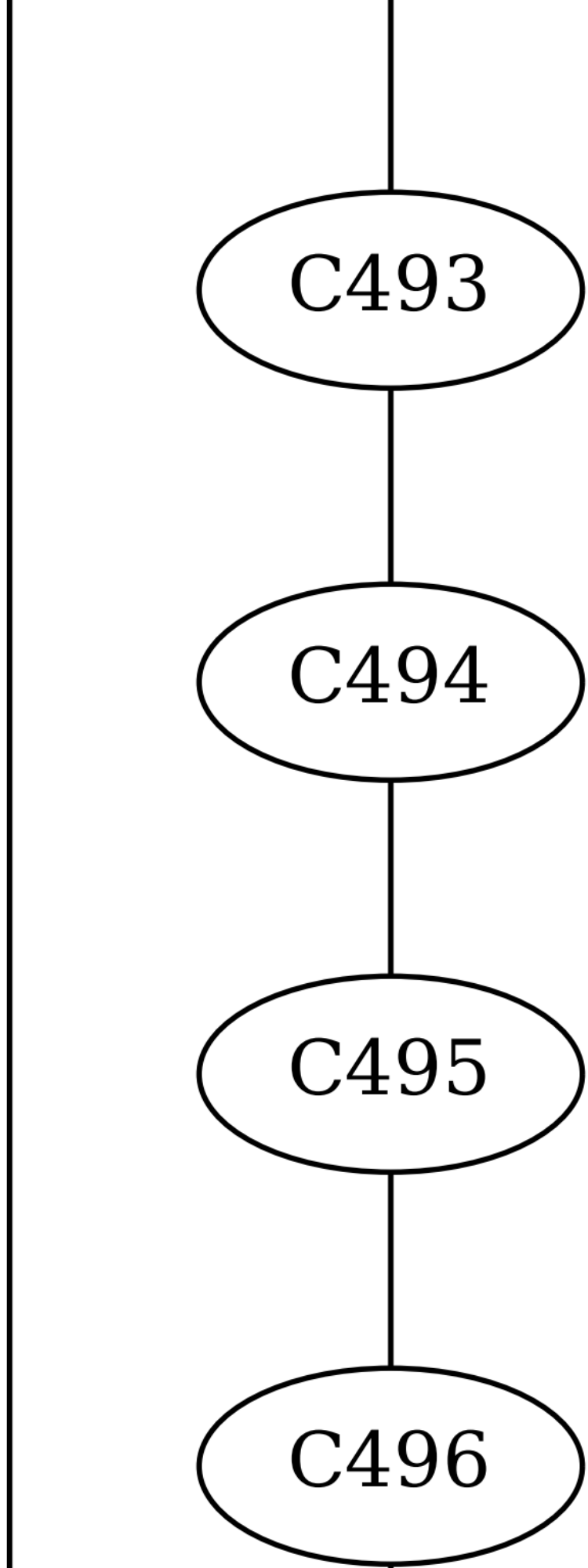
C493
C494
C495
C496

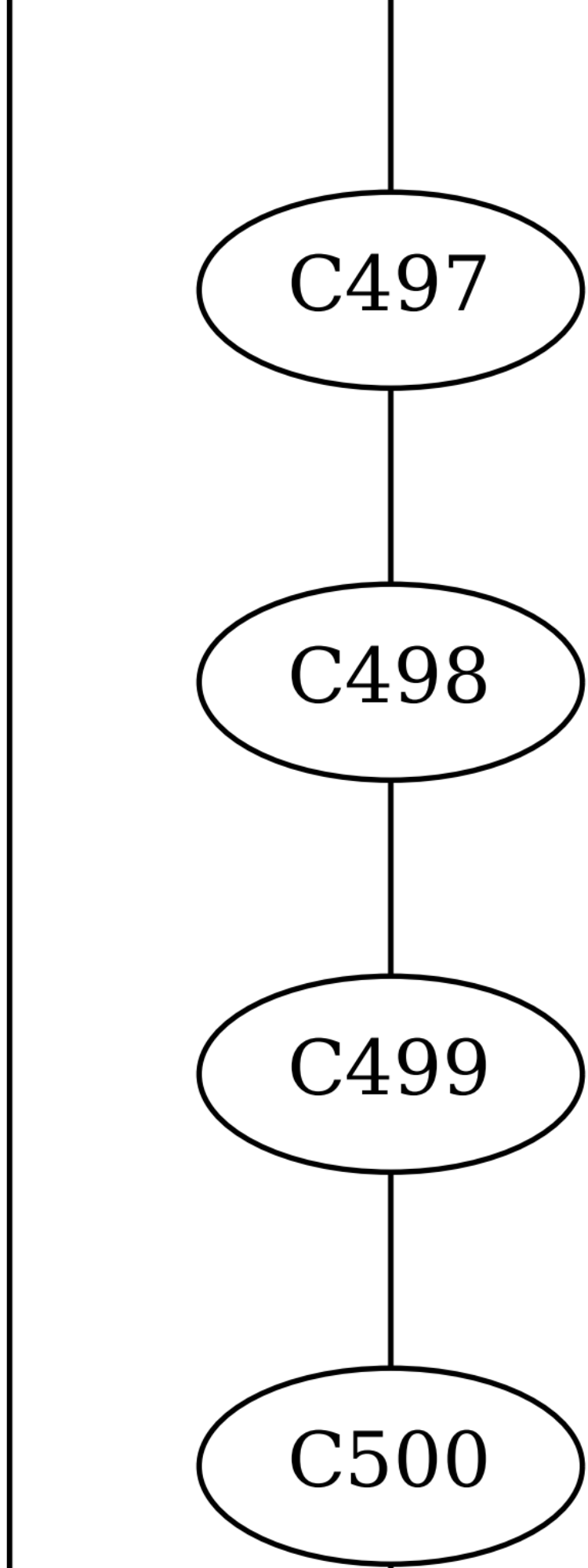
C497
C498
C499
C500

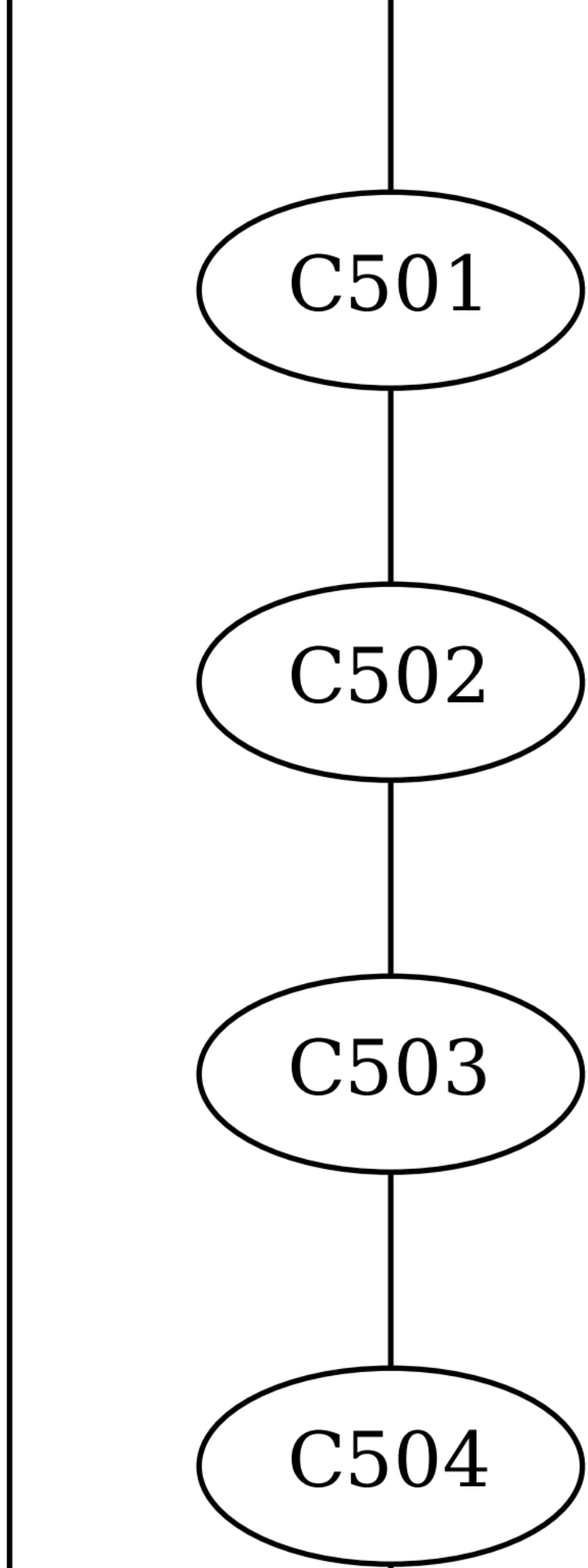
C501
C502
C503
C504

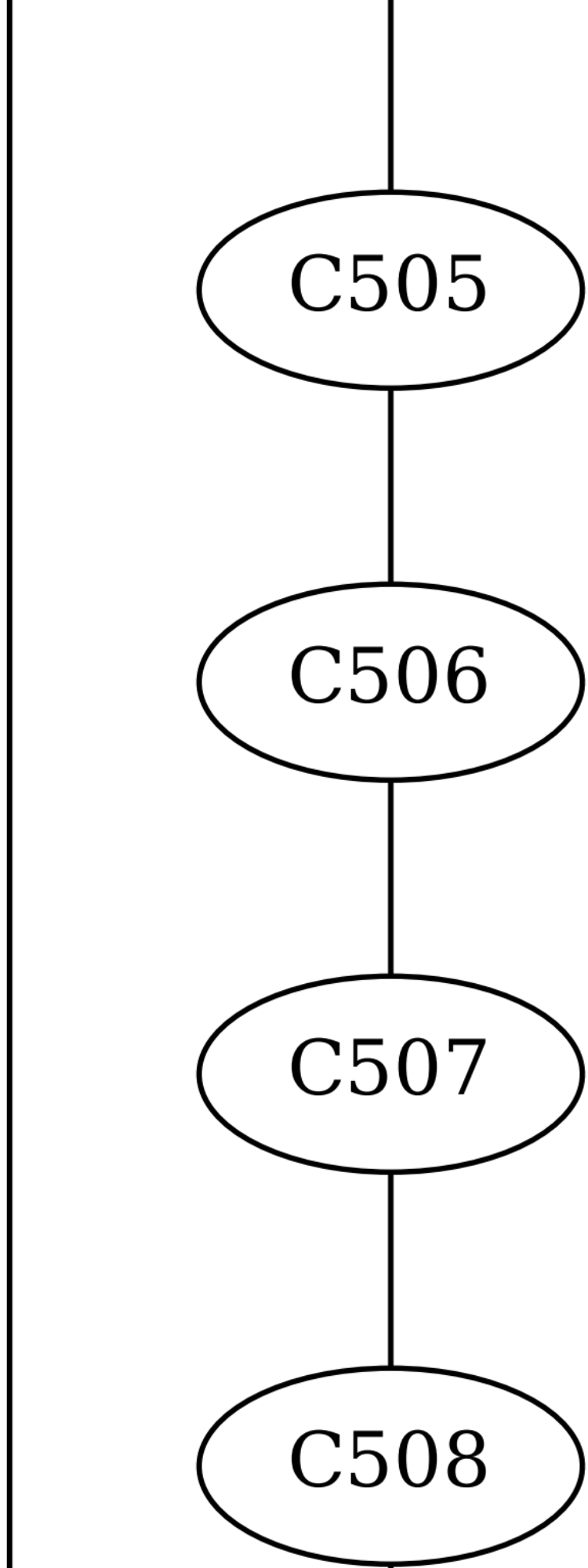
C505
C506
C507
C508

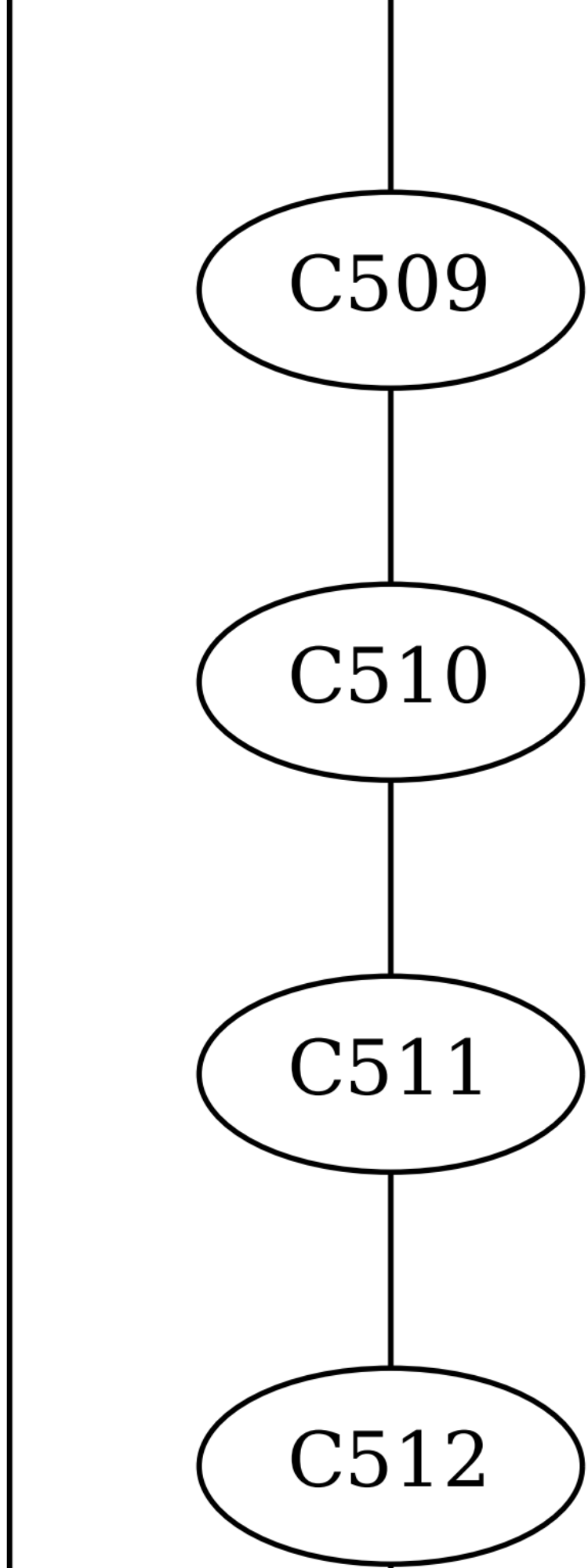
C509
C510
C511
C512

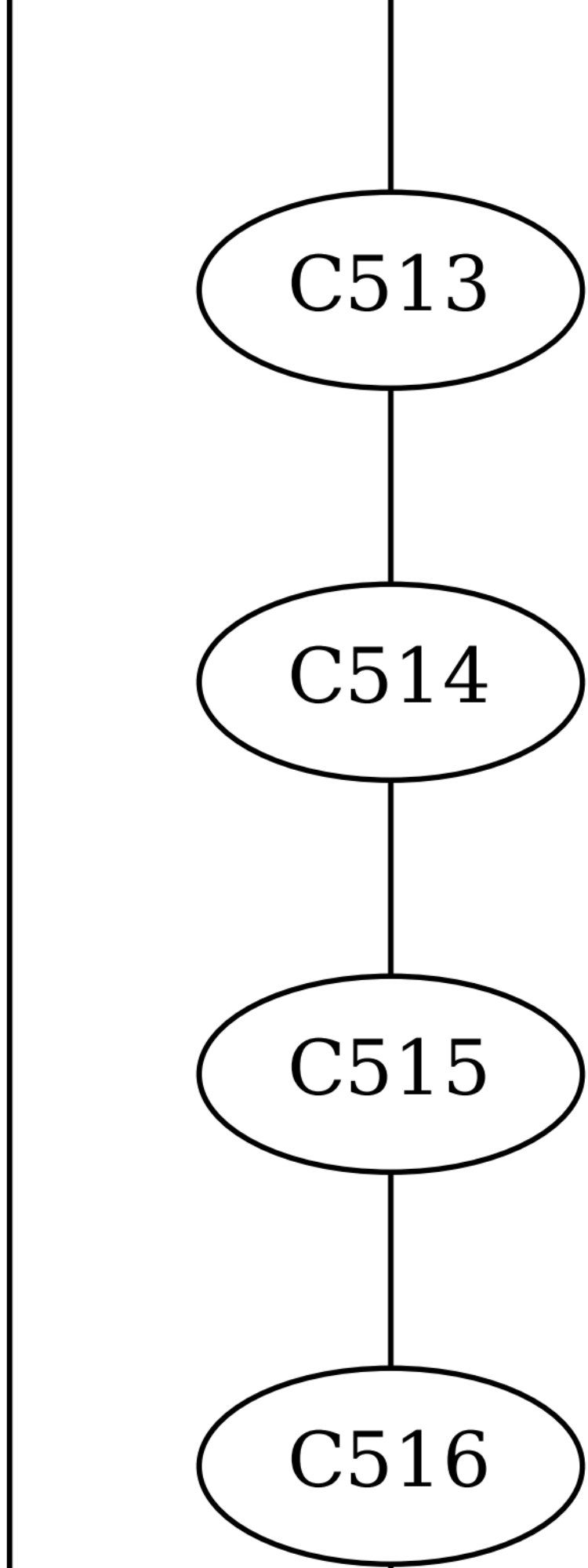
C513
C514
C515
C516

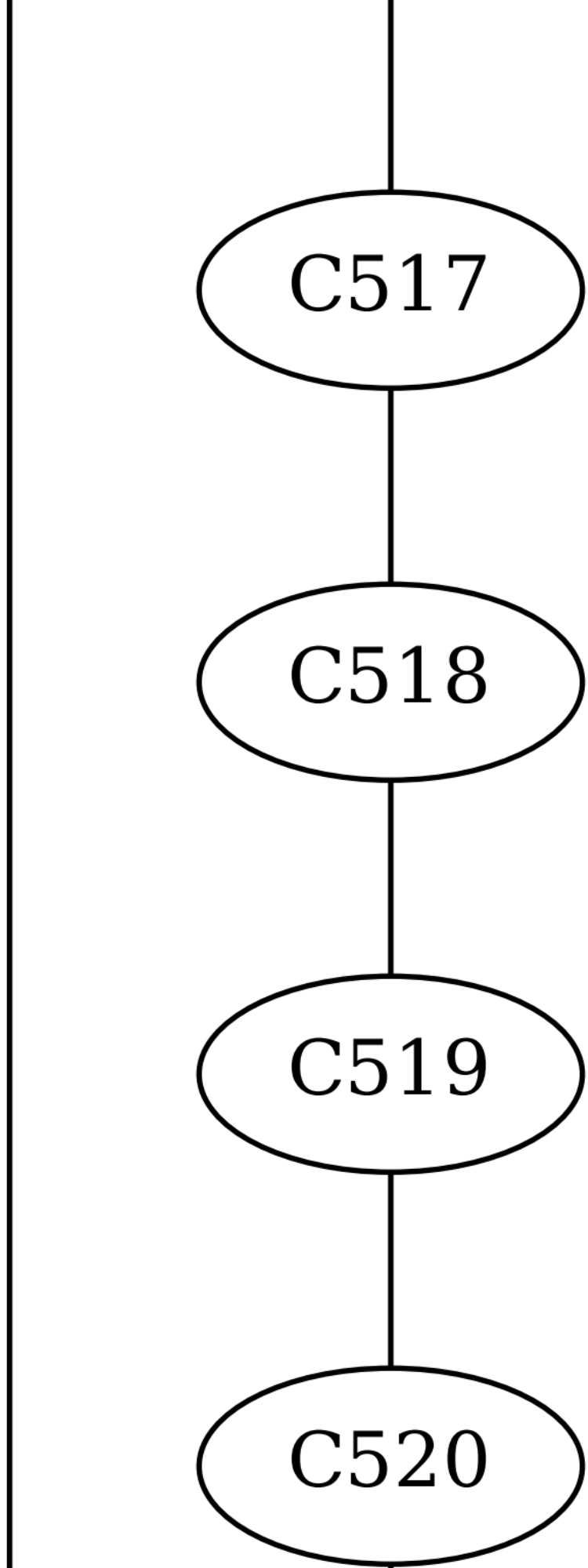
C517
C518
C519
C520

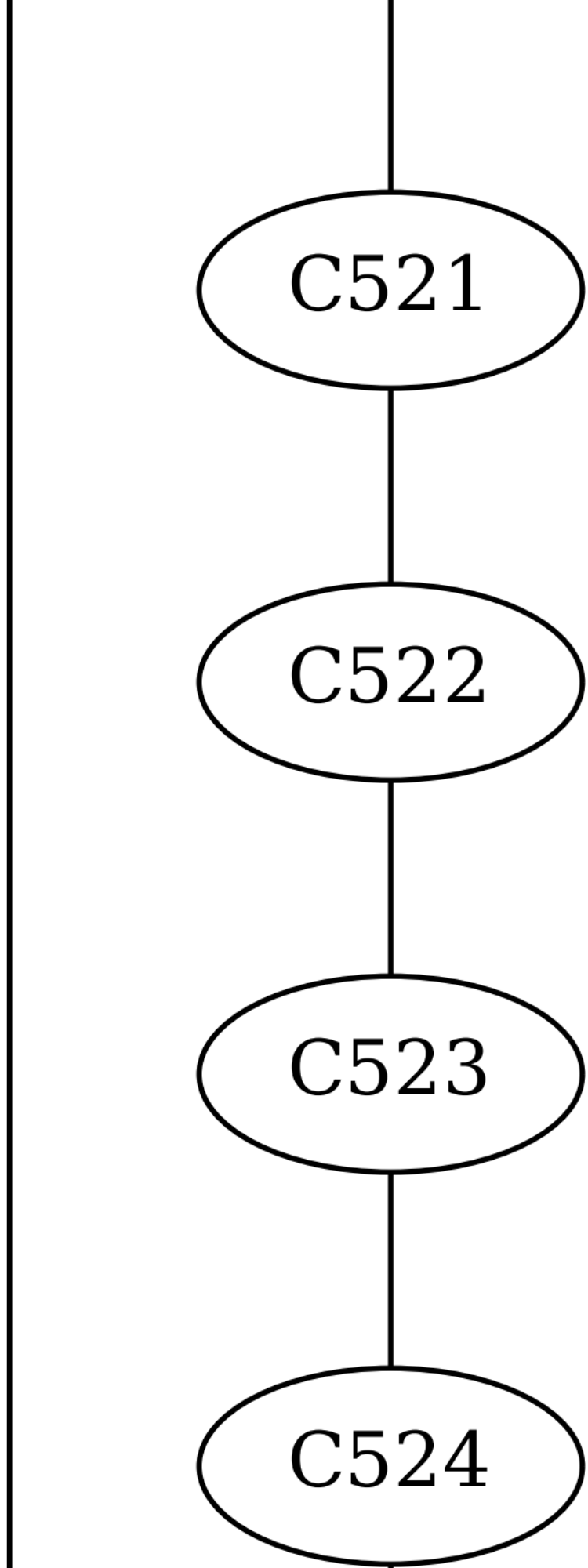
C521
C522
C523
C524

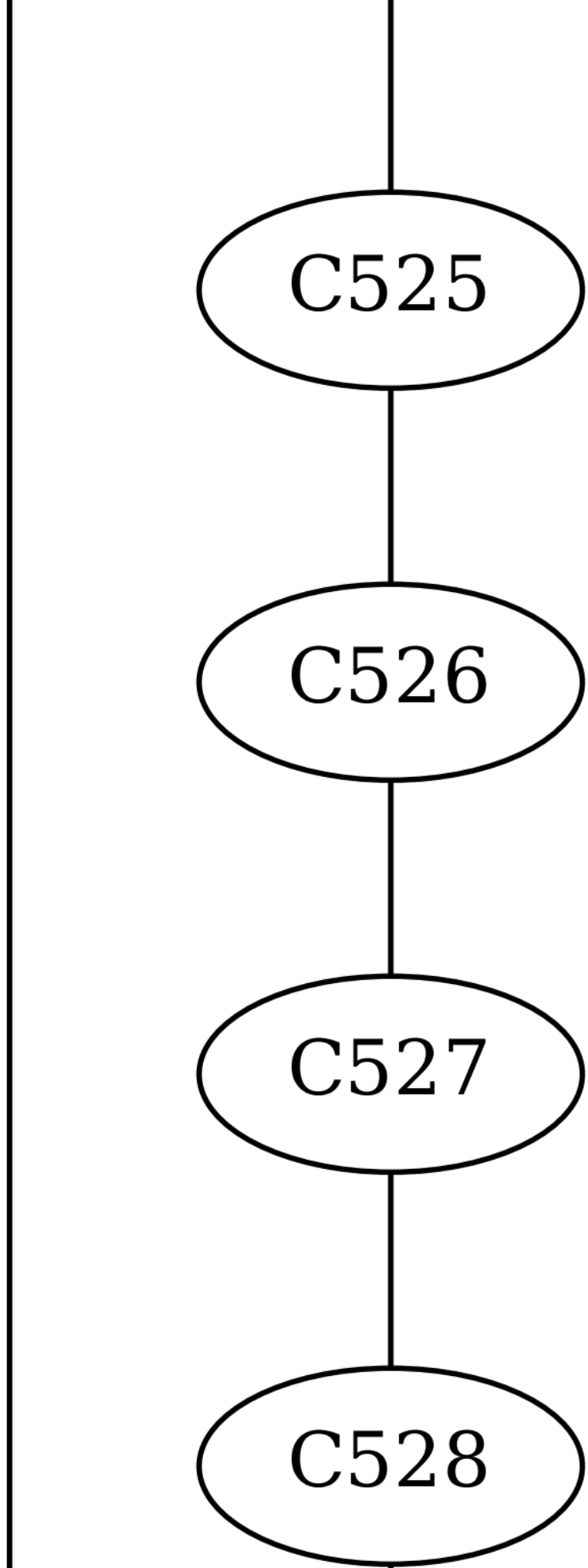
C525
C526
C527
C528

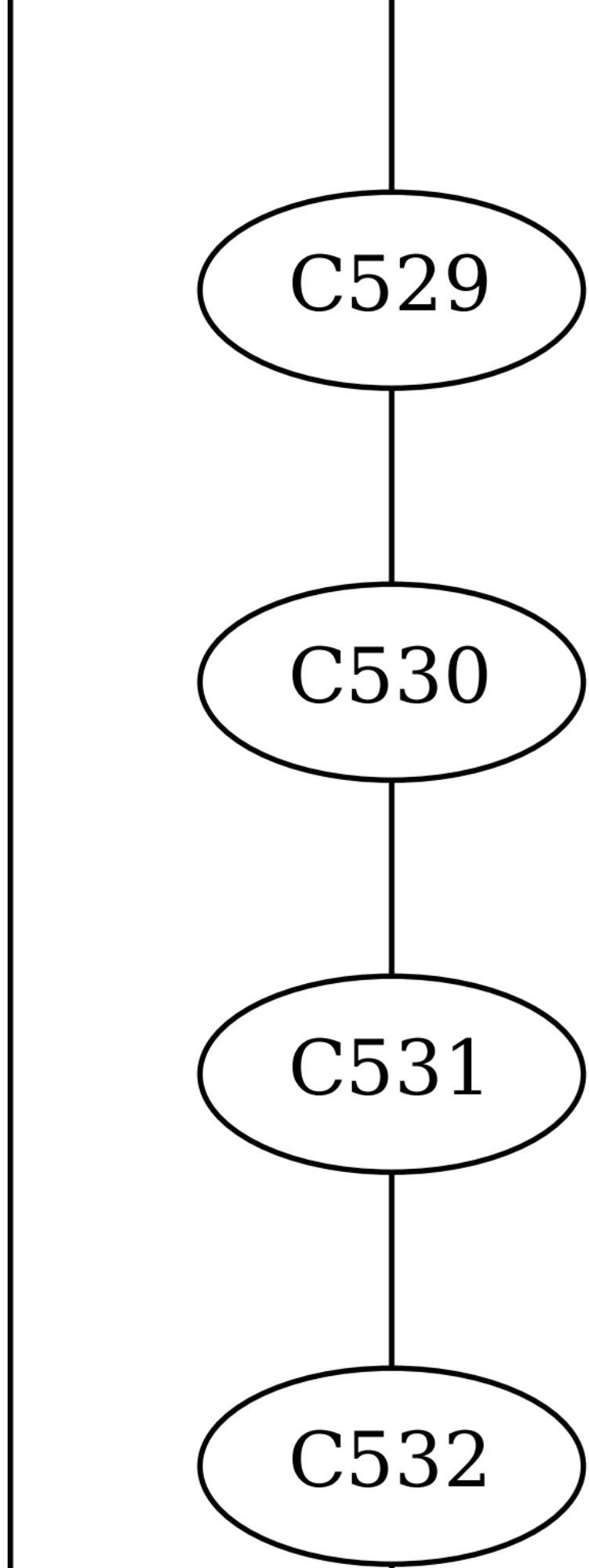
C529
C530
C531
C532

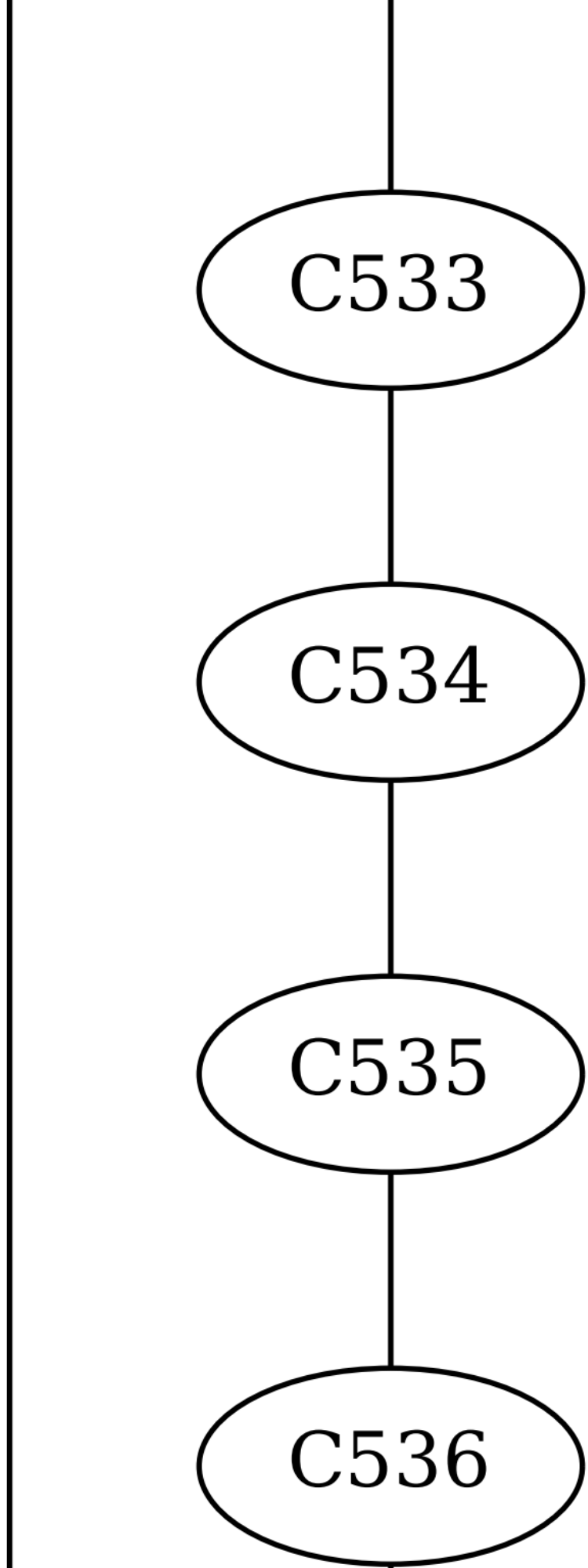
C533
C534
C535
C536

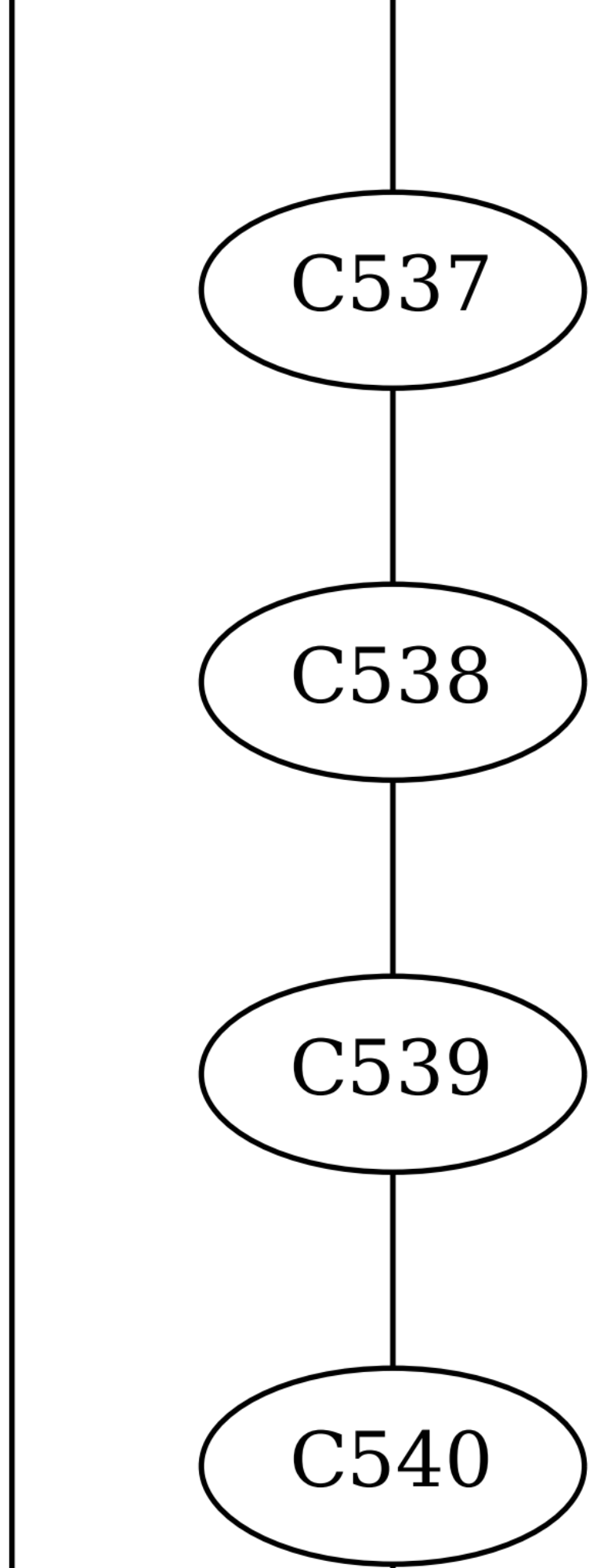
C537
C538
C539
C540

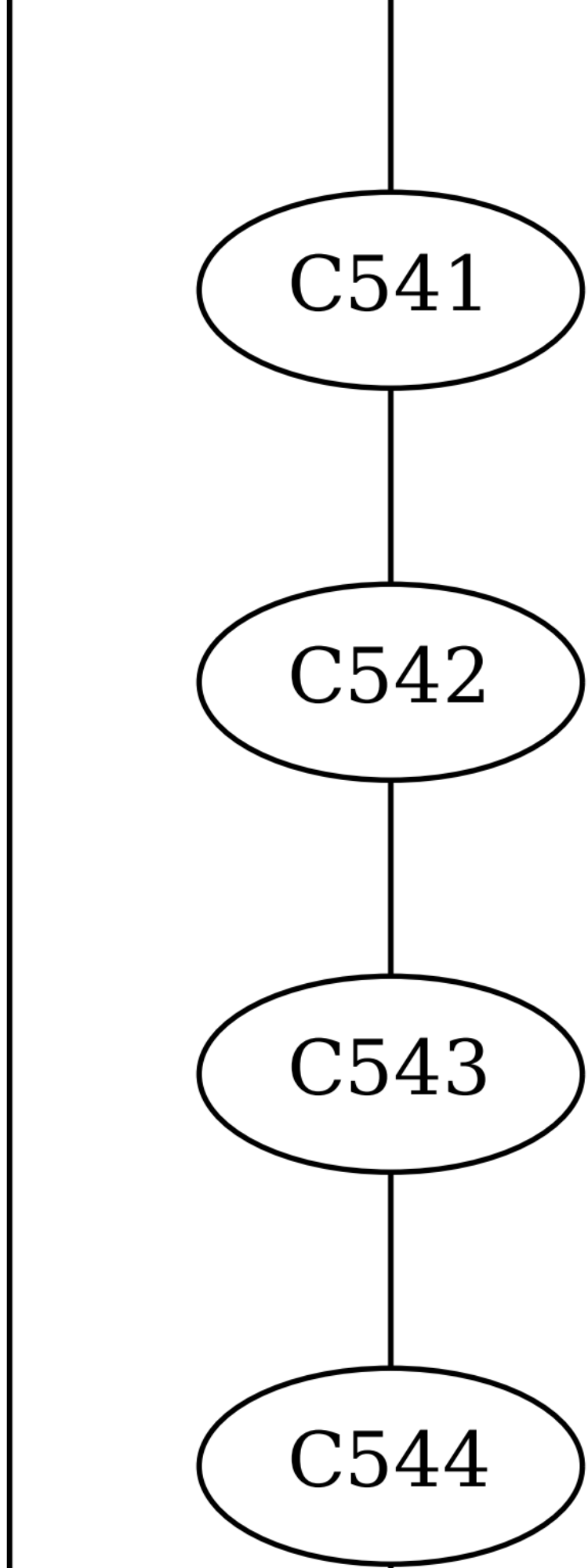
C541
C542
C543
C544

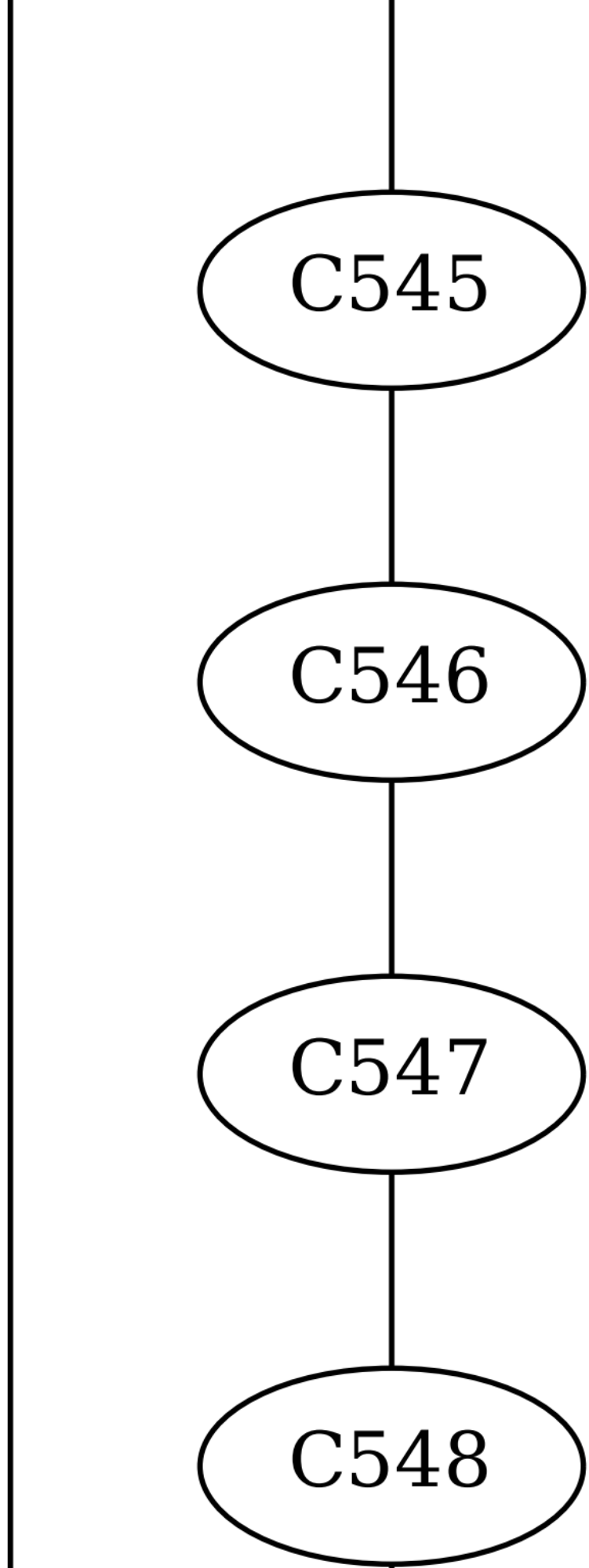
C545
C546
C547
C548

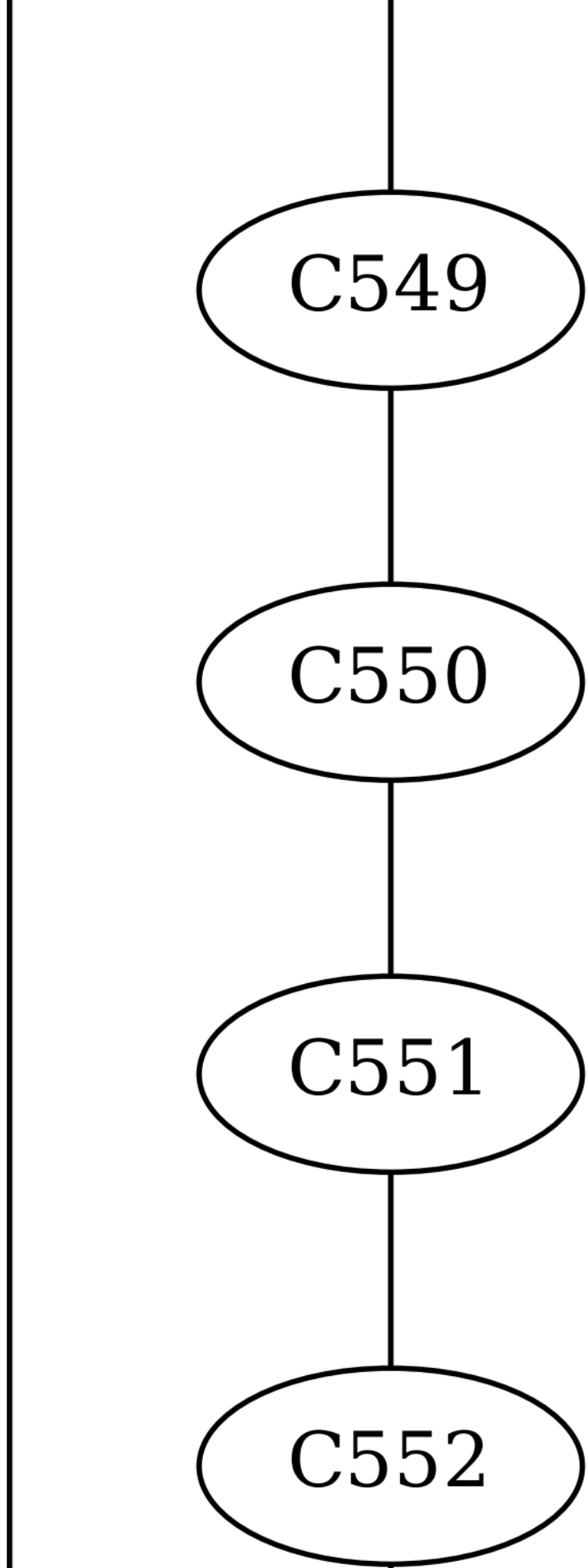
C549
C550
C551
C552

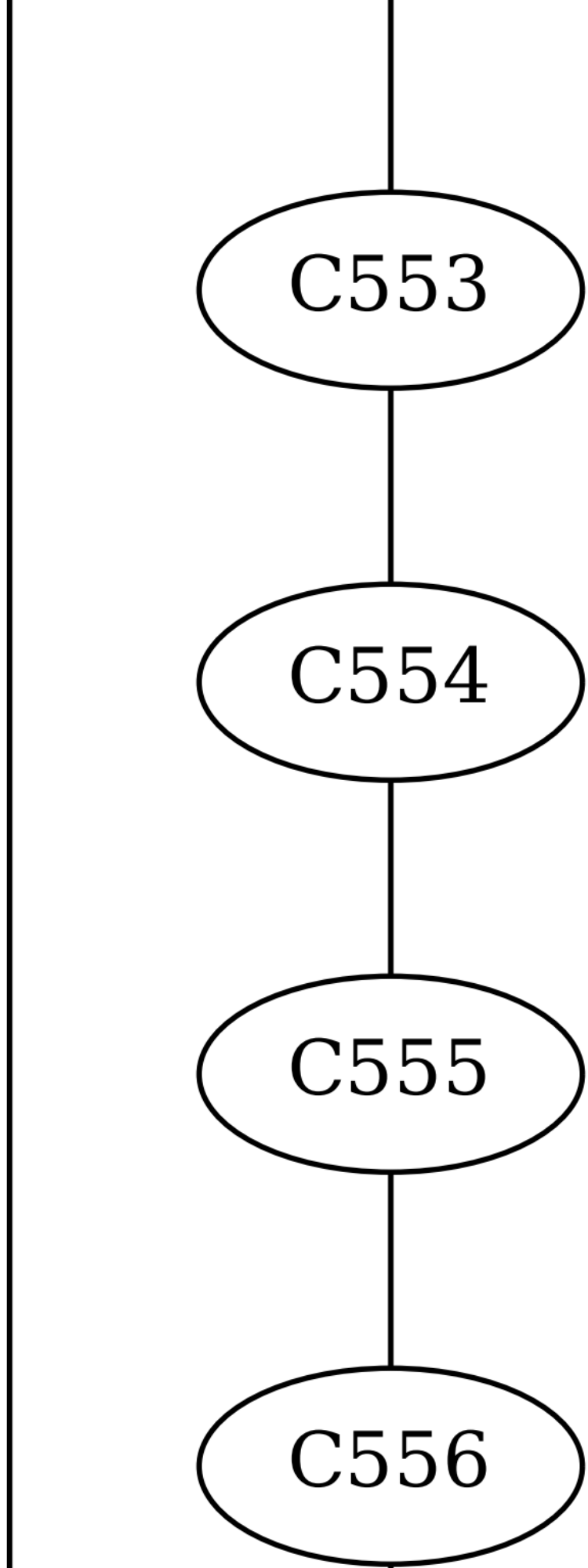
C553
C554
C555
C556

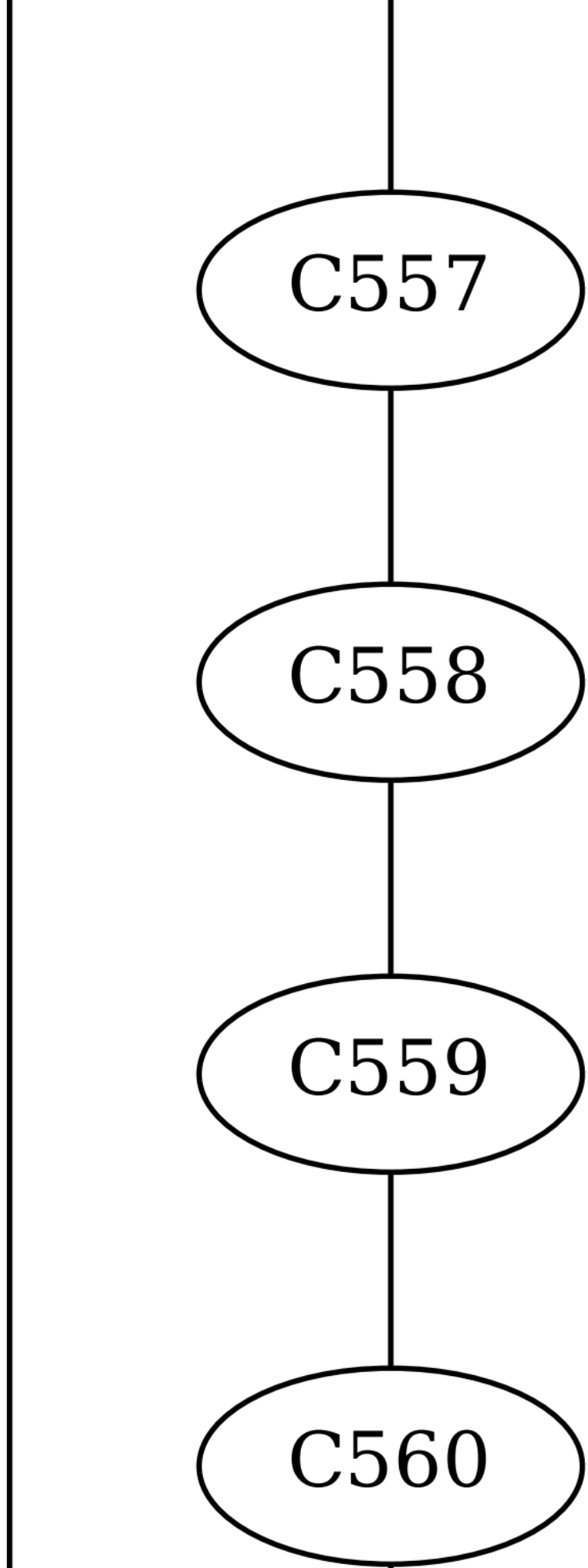
C557
C558
C559
C560

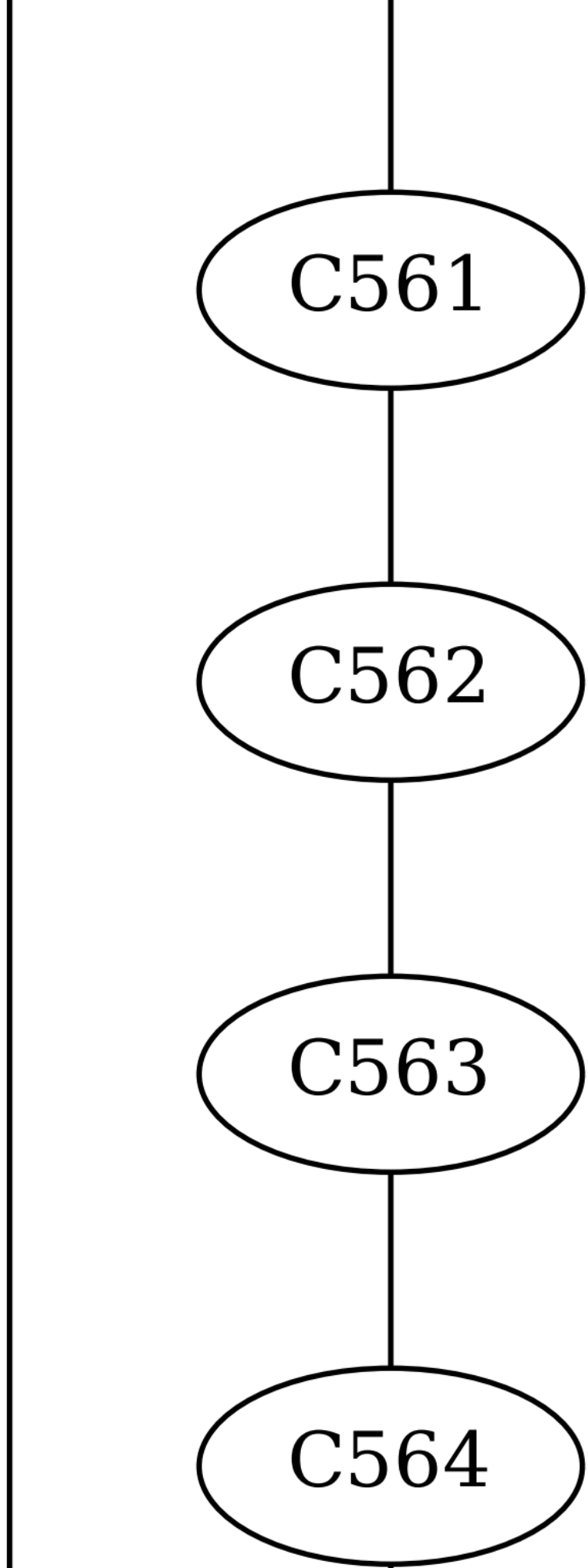
C561
C562
C563
C564

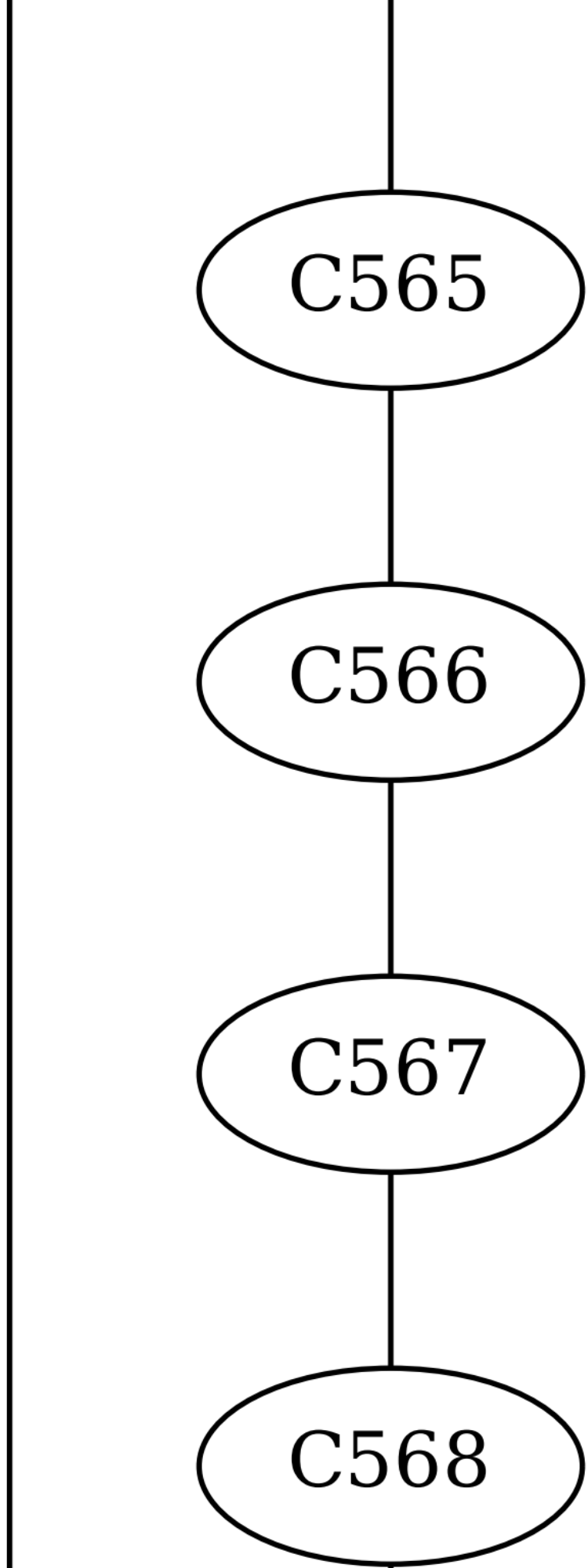
C565
C566
C567
C568

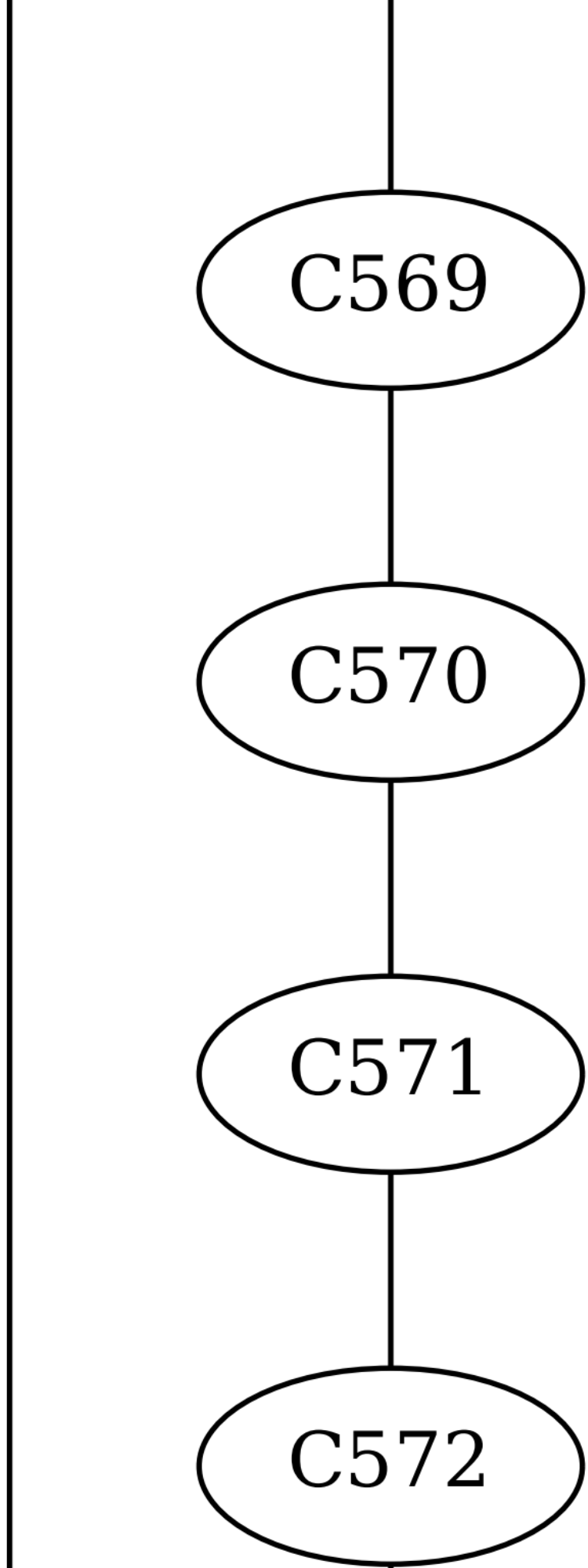
C569
C570
C571
C572

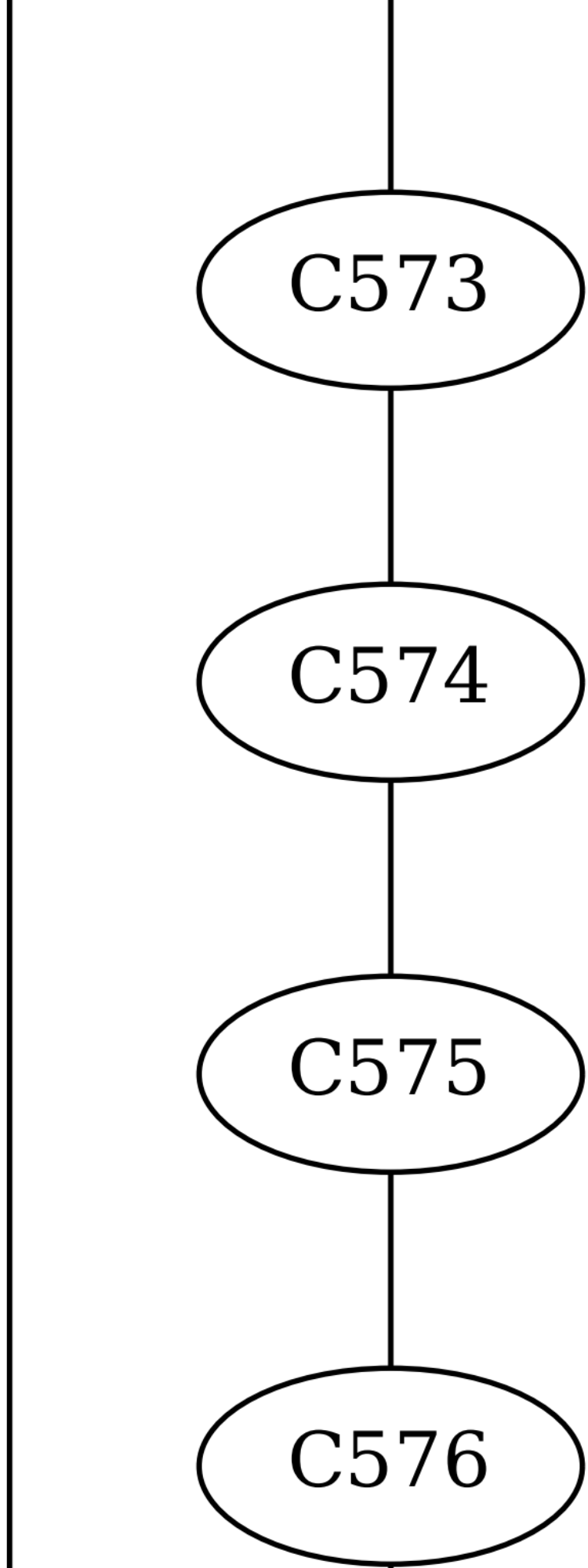
C573
C574
C575
C576

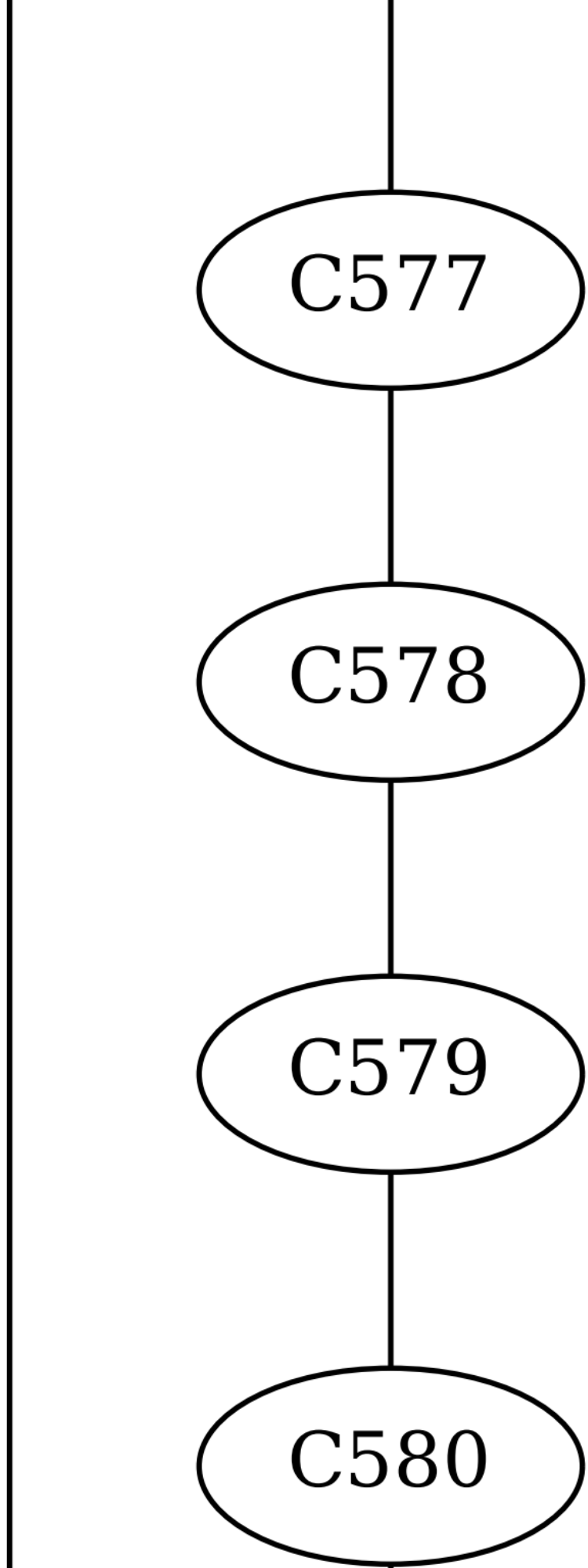
C577
C578
C579
C580

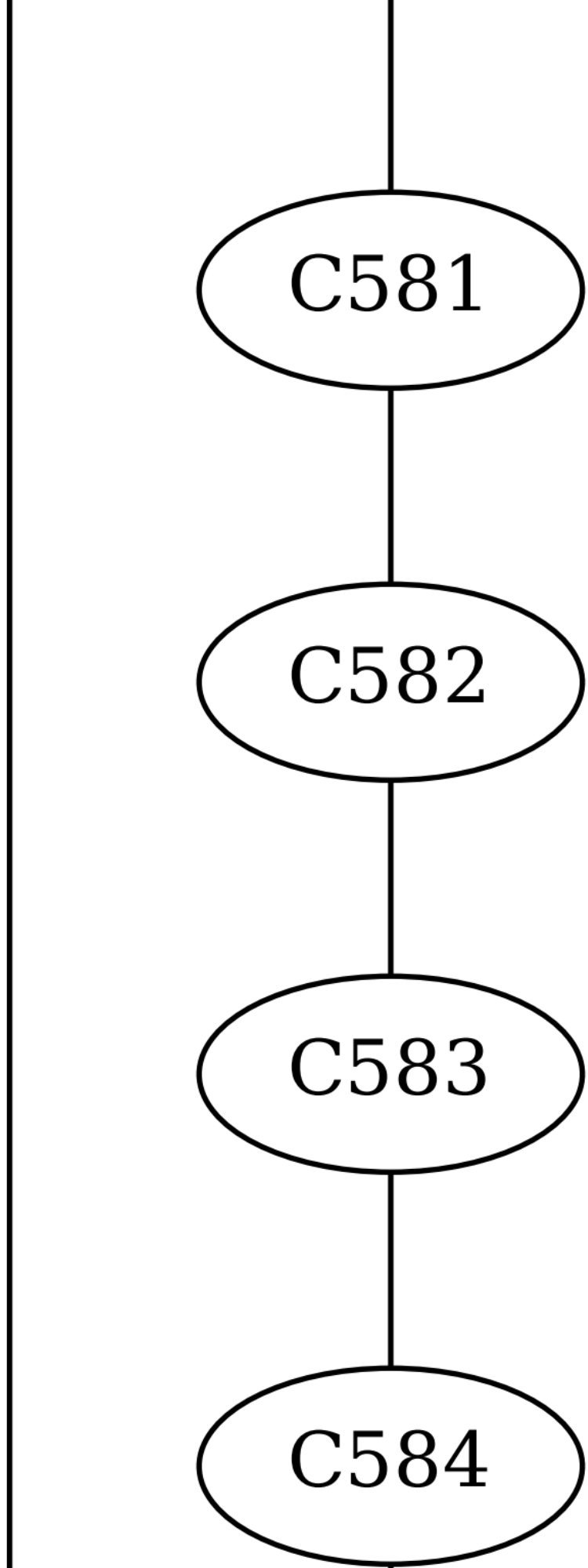
C581
C582
C583
C584

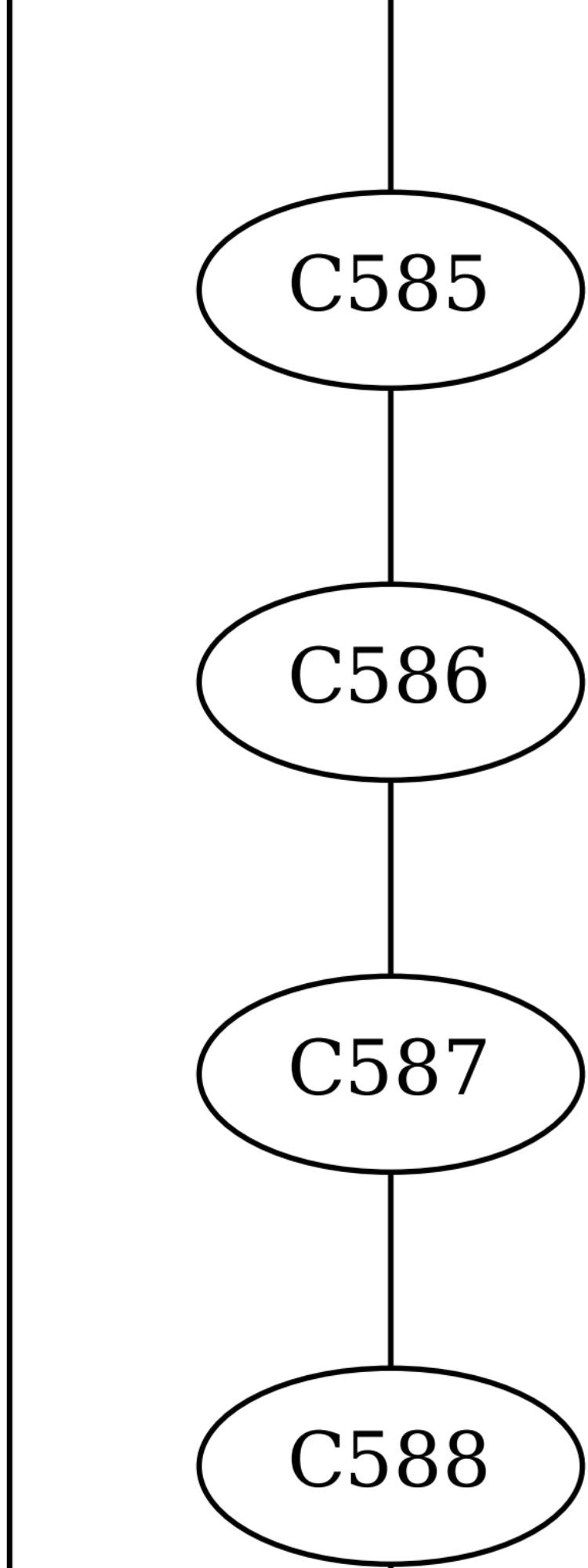
C585
C586
C587
C588

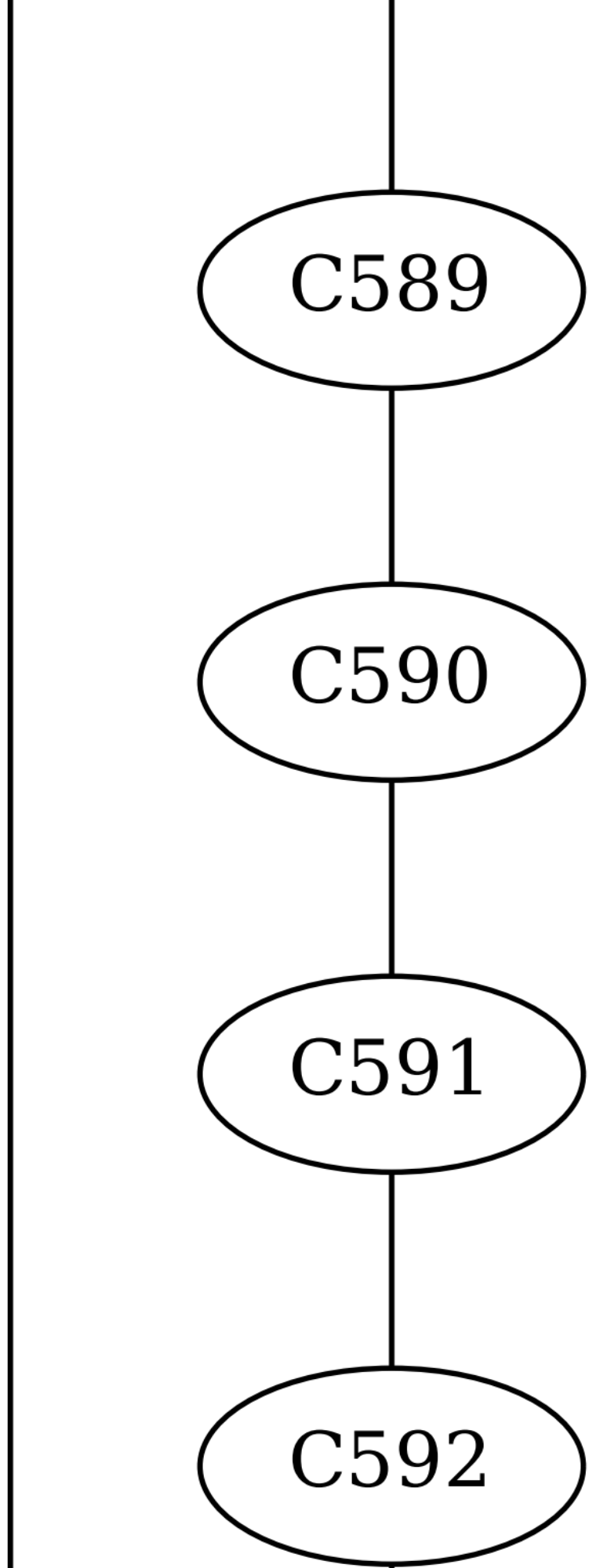
C589
C590
C591
C592

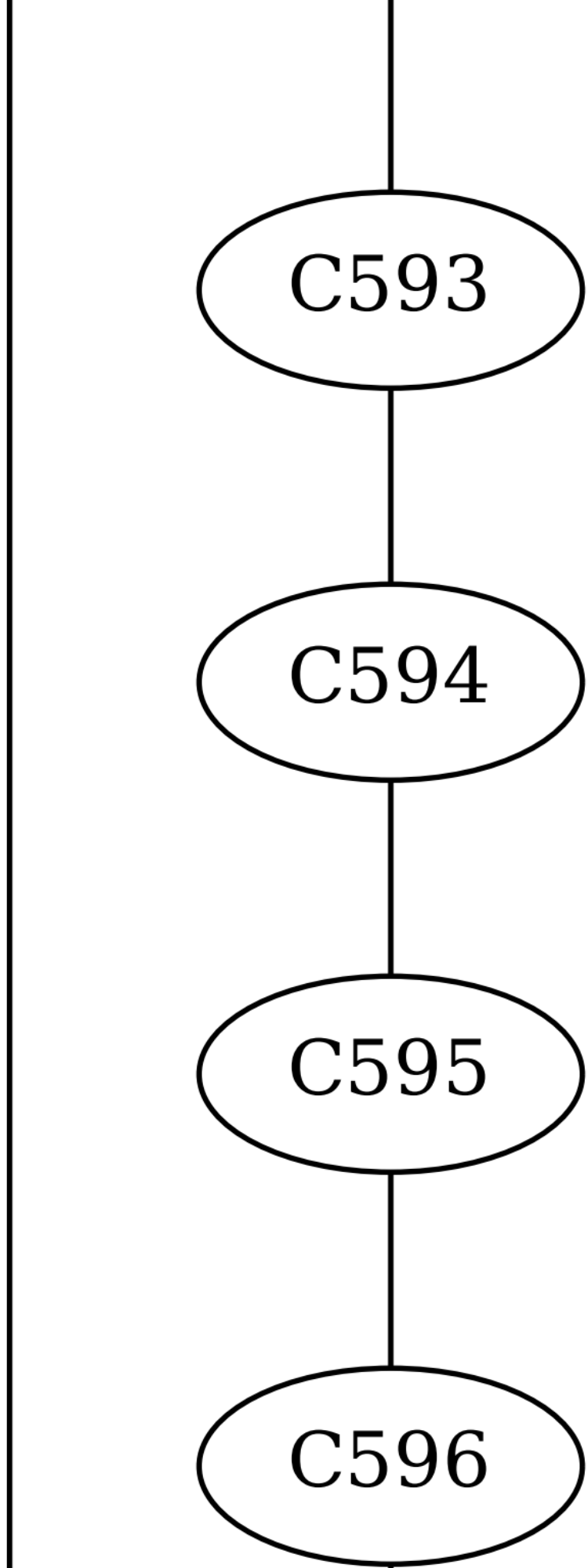
C593
C594
C595
C596

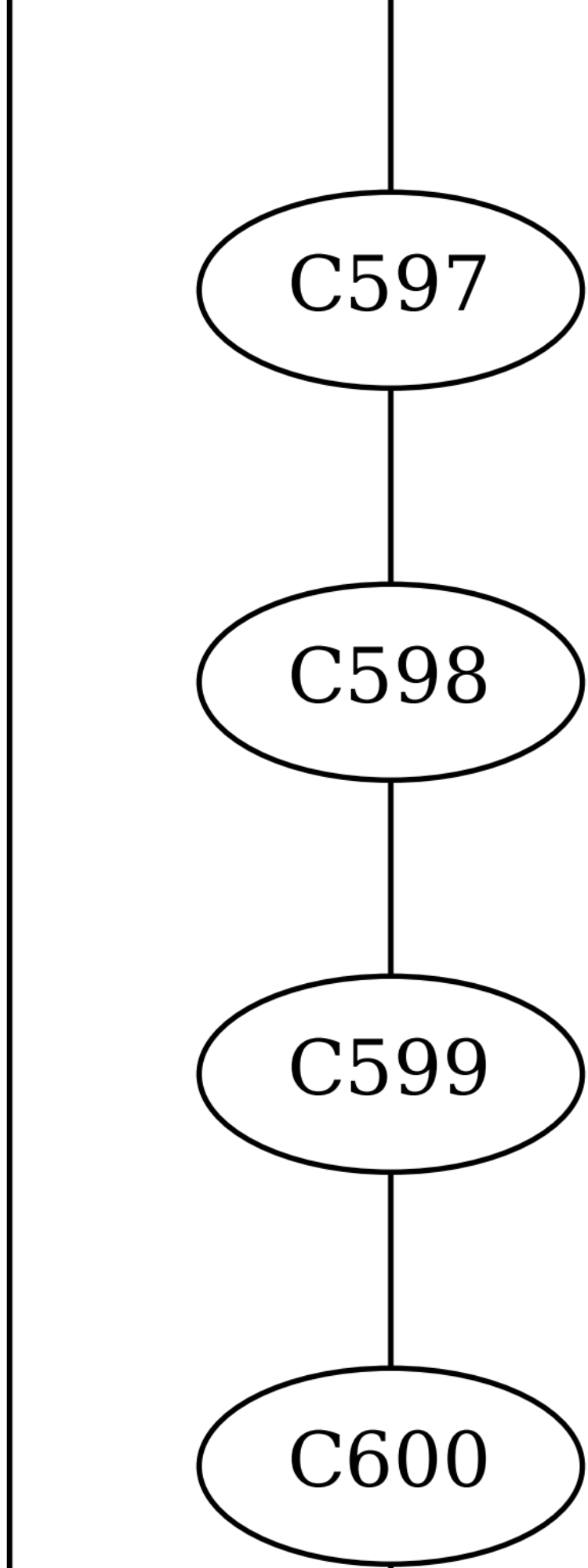
C597
C598
C599
C600

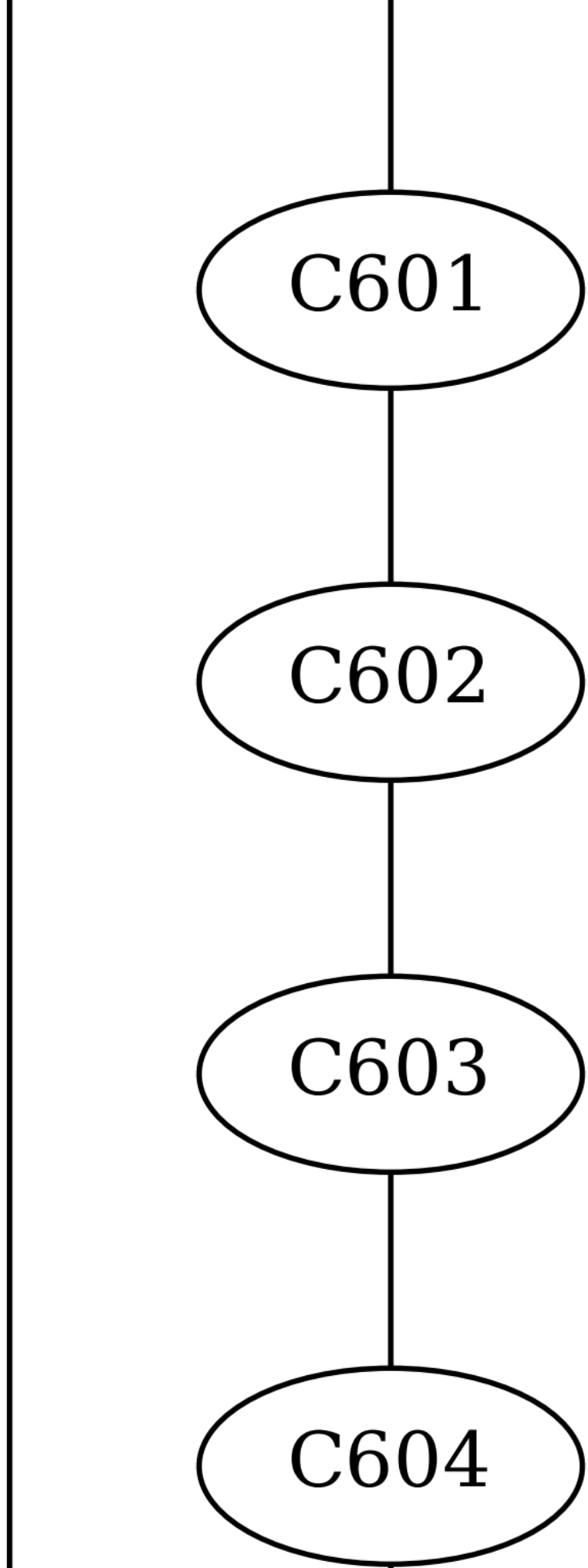
C601
C602
C603
C604

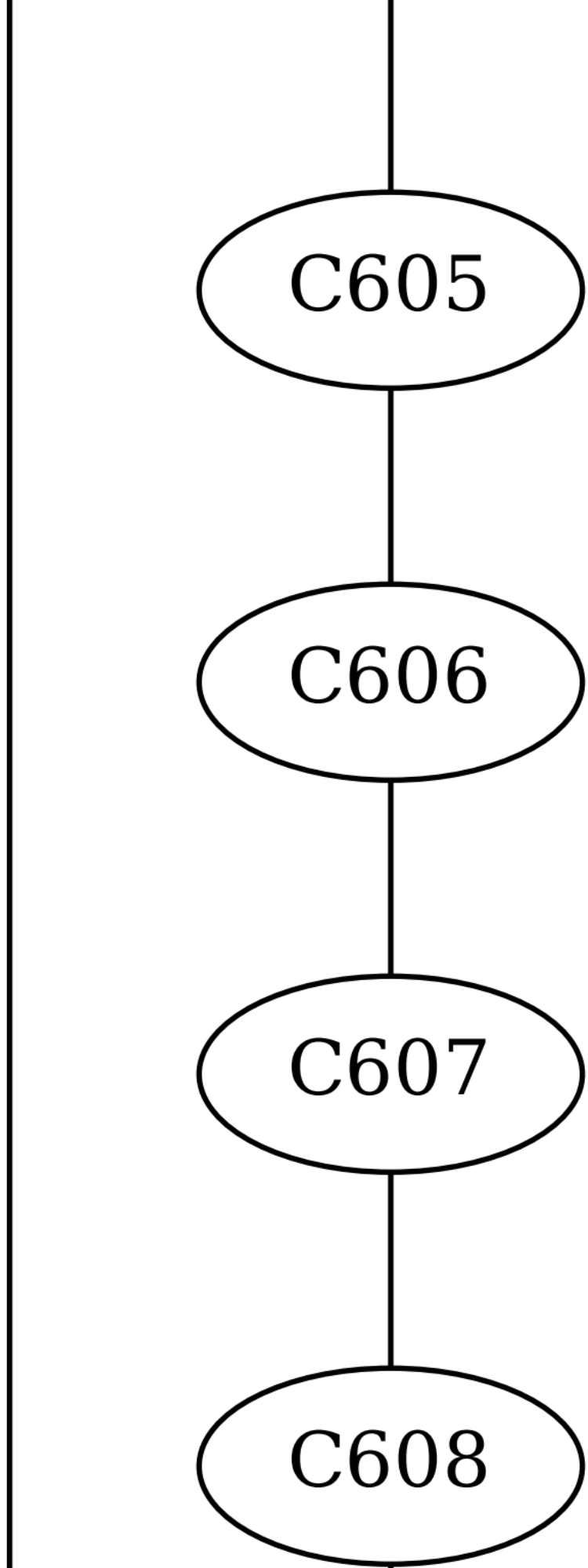
C605
C606
C607
C608

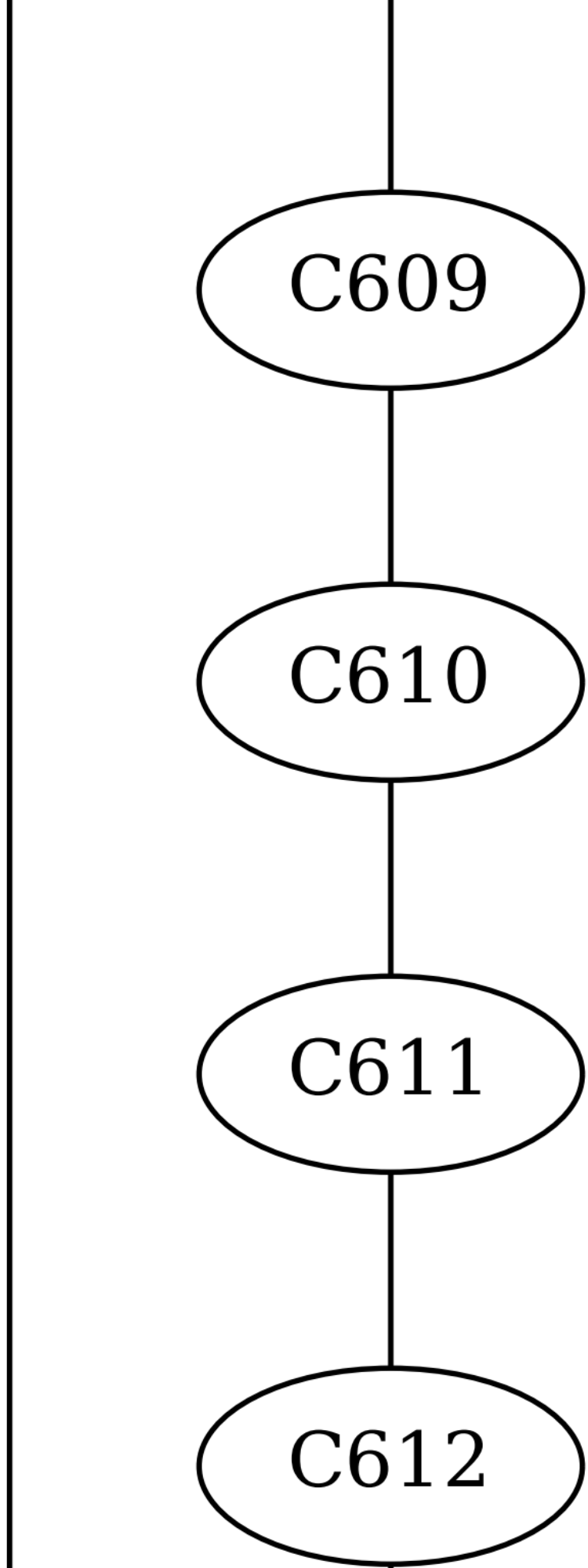
C609
C610
C611
C612

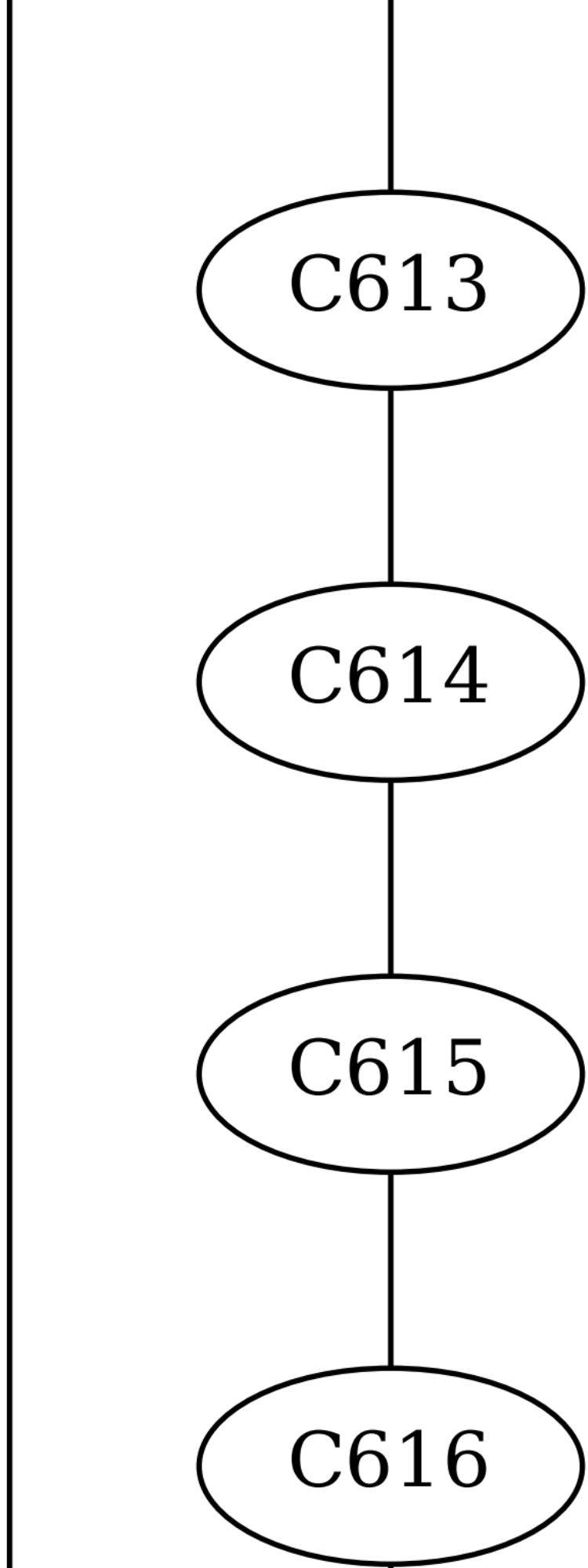
C613
C614
C615
C616

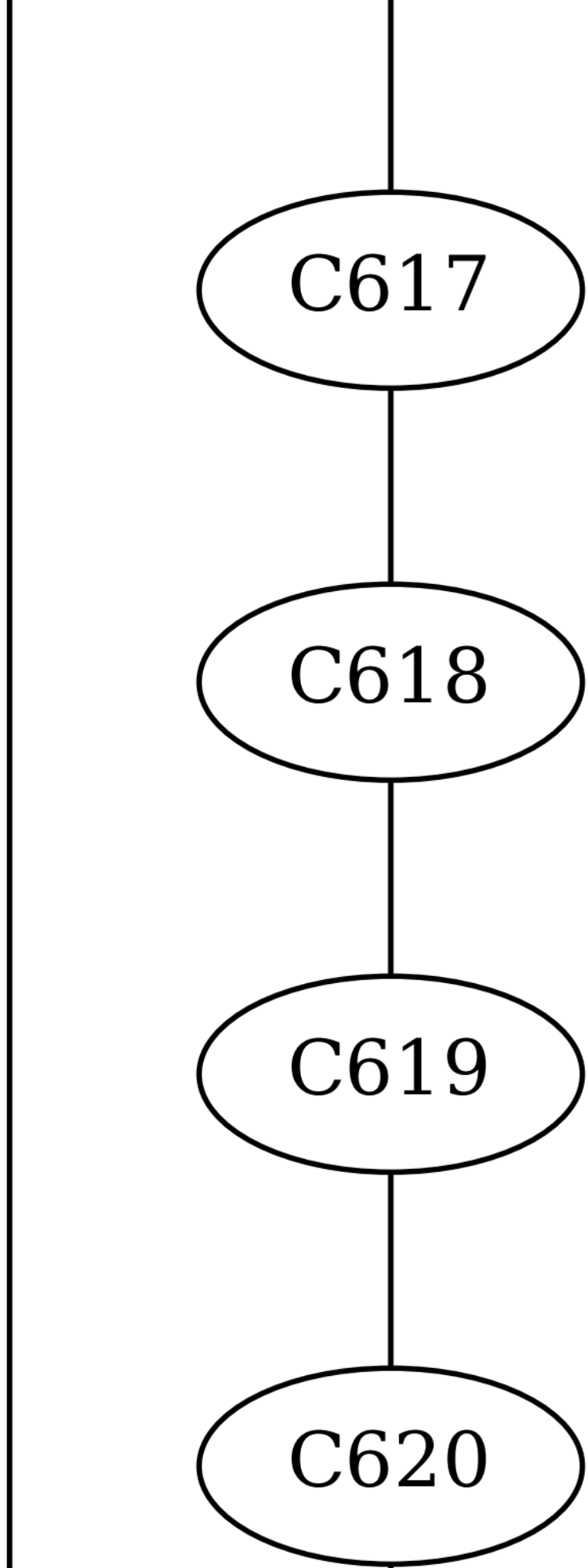
C617
C618
C619
C620

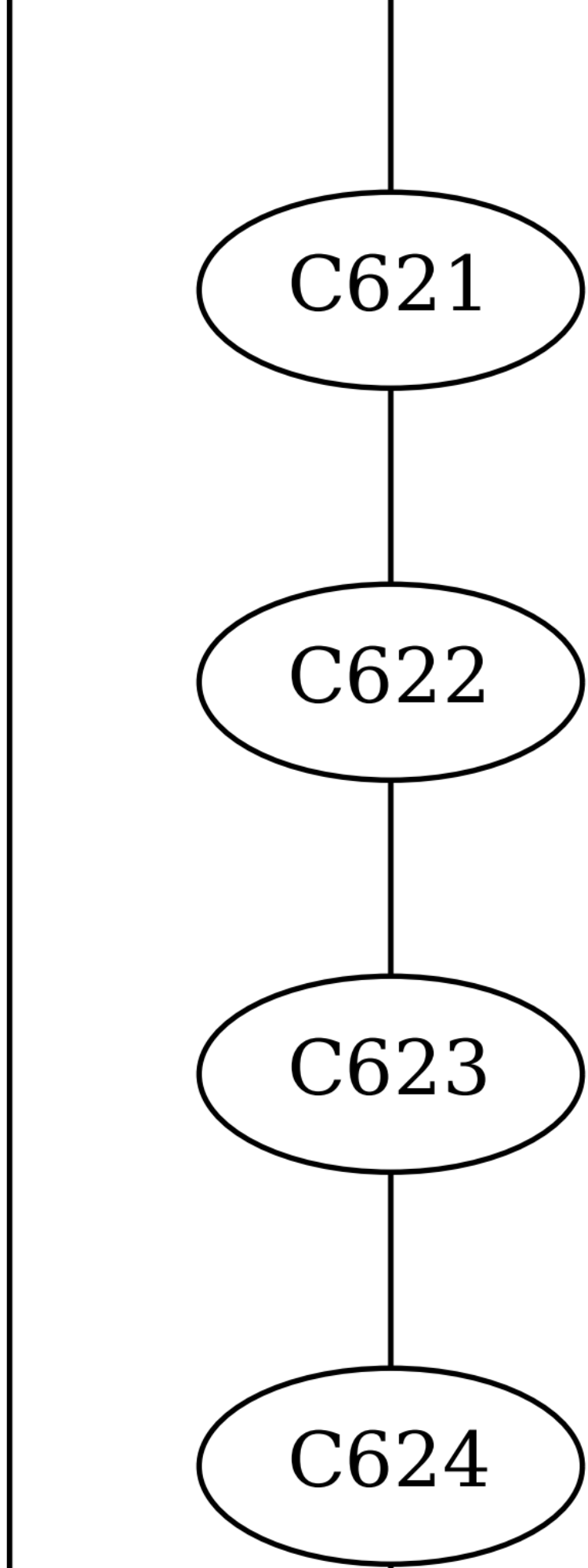
C621
C622
C623
C624

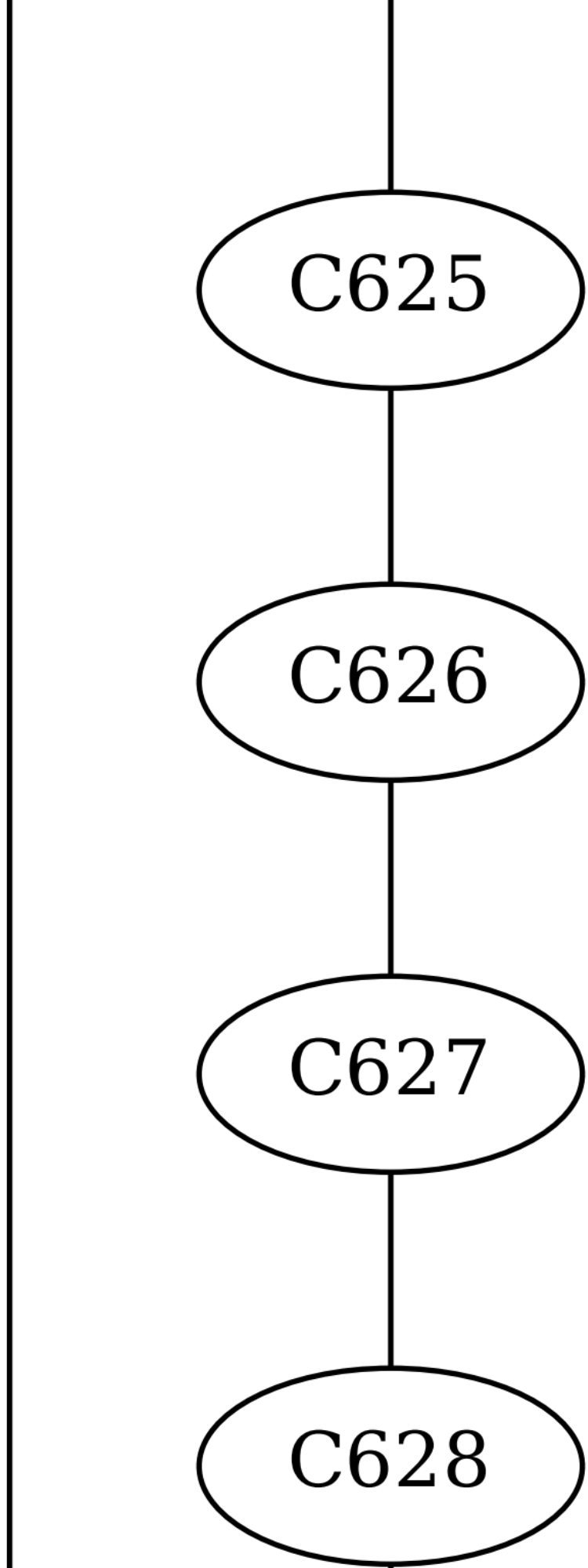
C625
C626
C627
C628

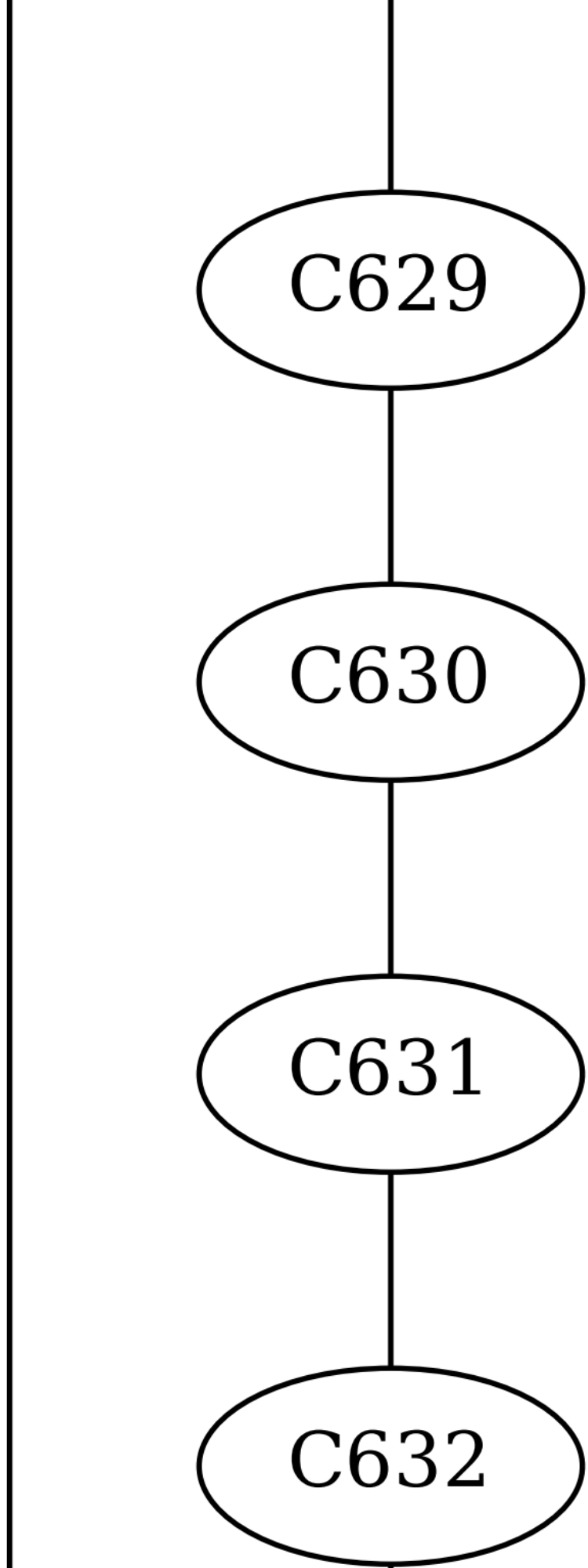
C629
C630
C631
C632

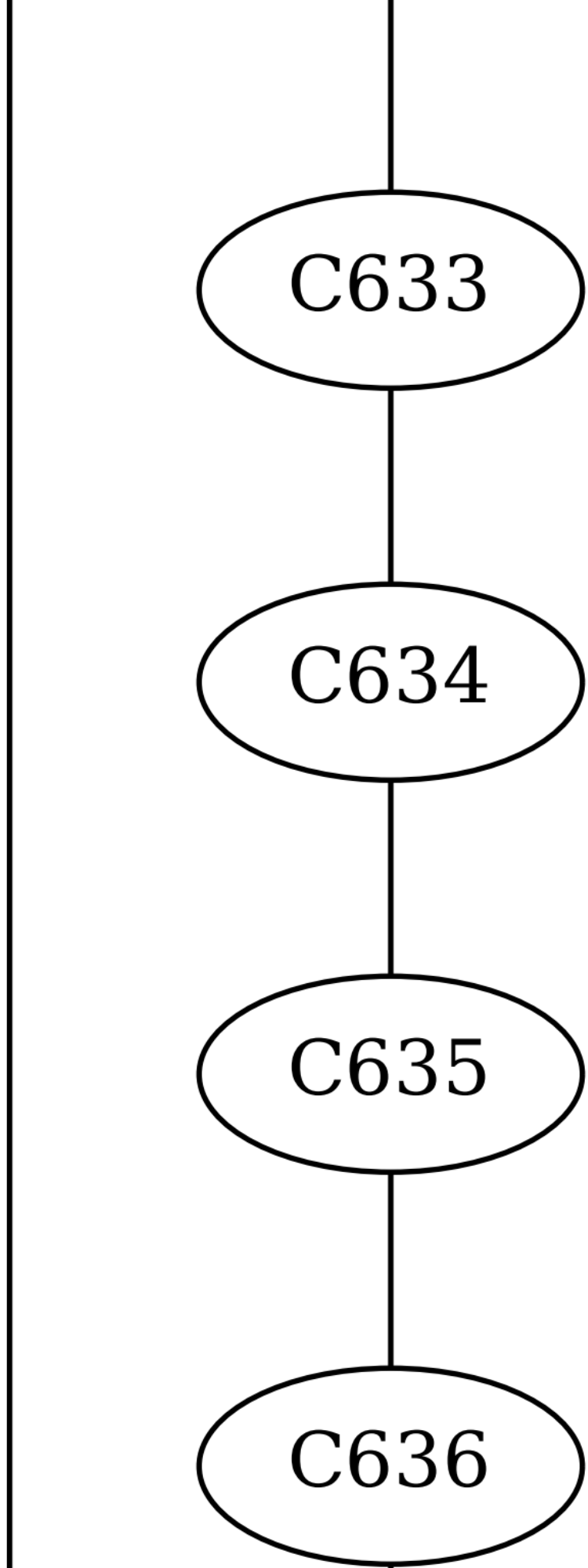
C633
C634
C635
C636

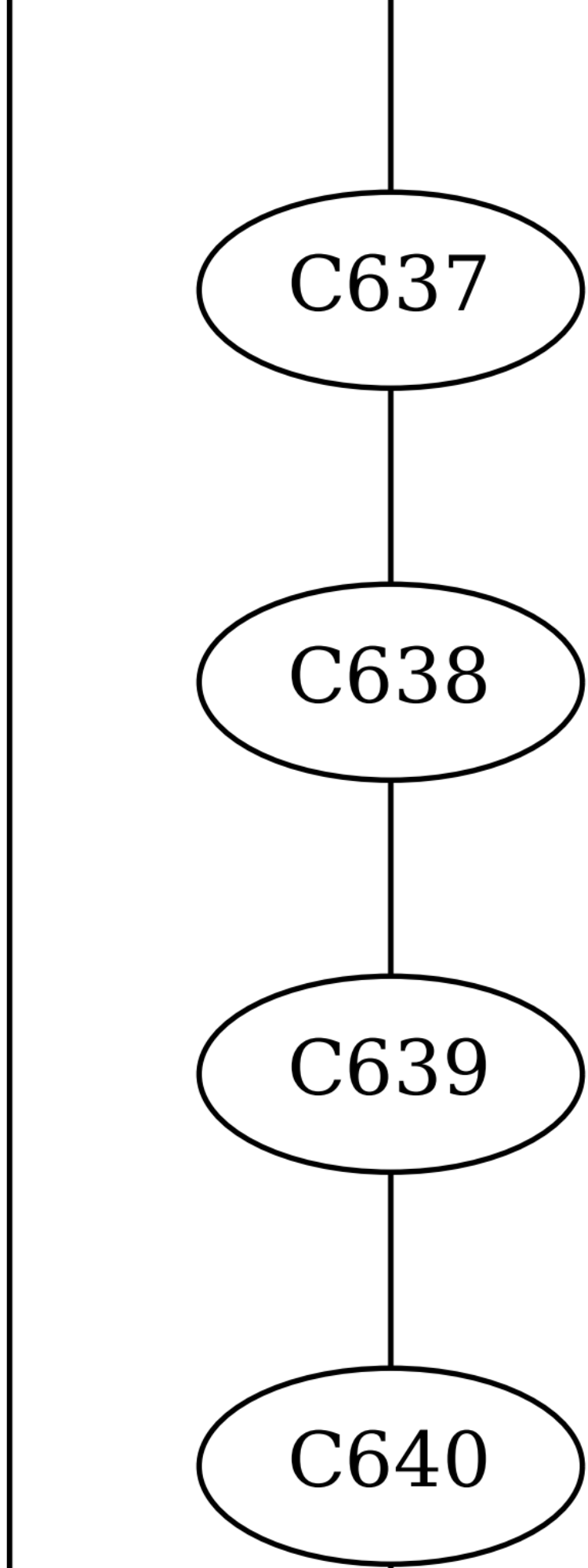
C637
C638
C639
C640

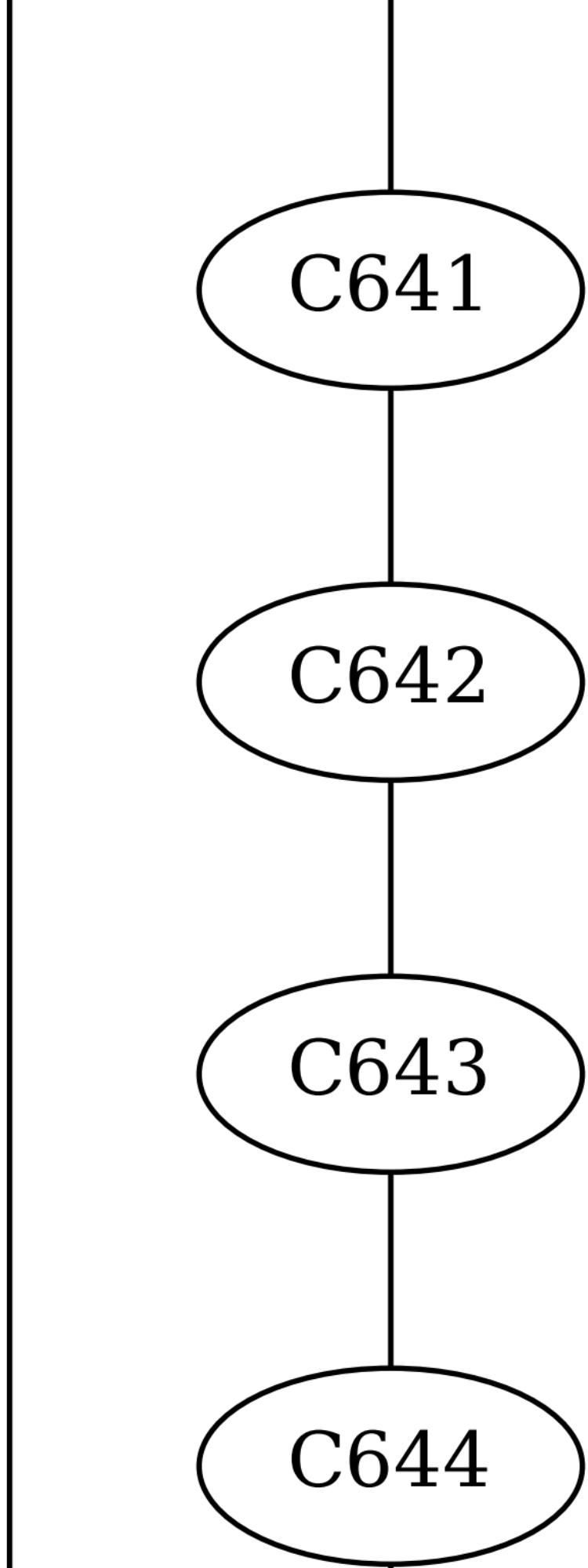
C641
C642
C643
C644

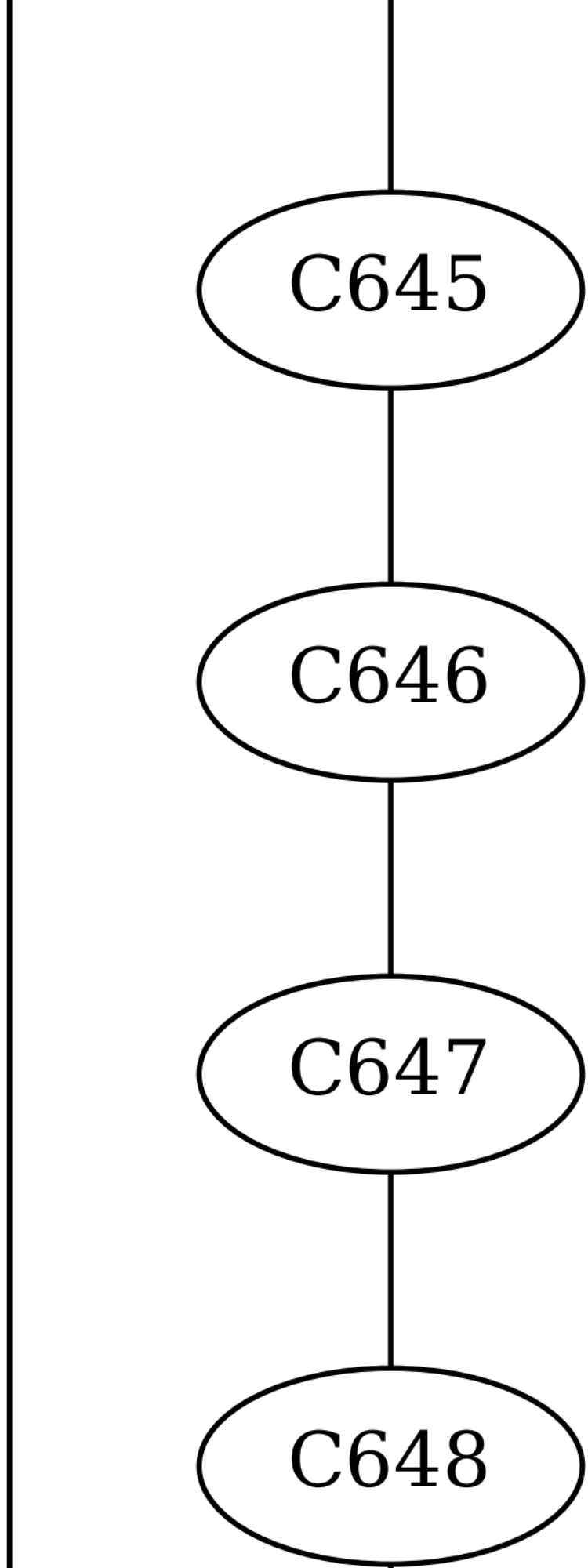
C645
C646
C647
C648

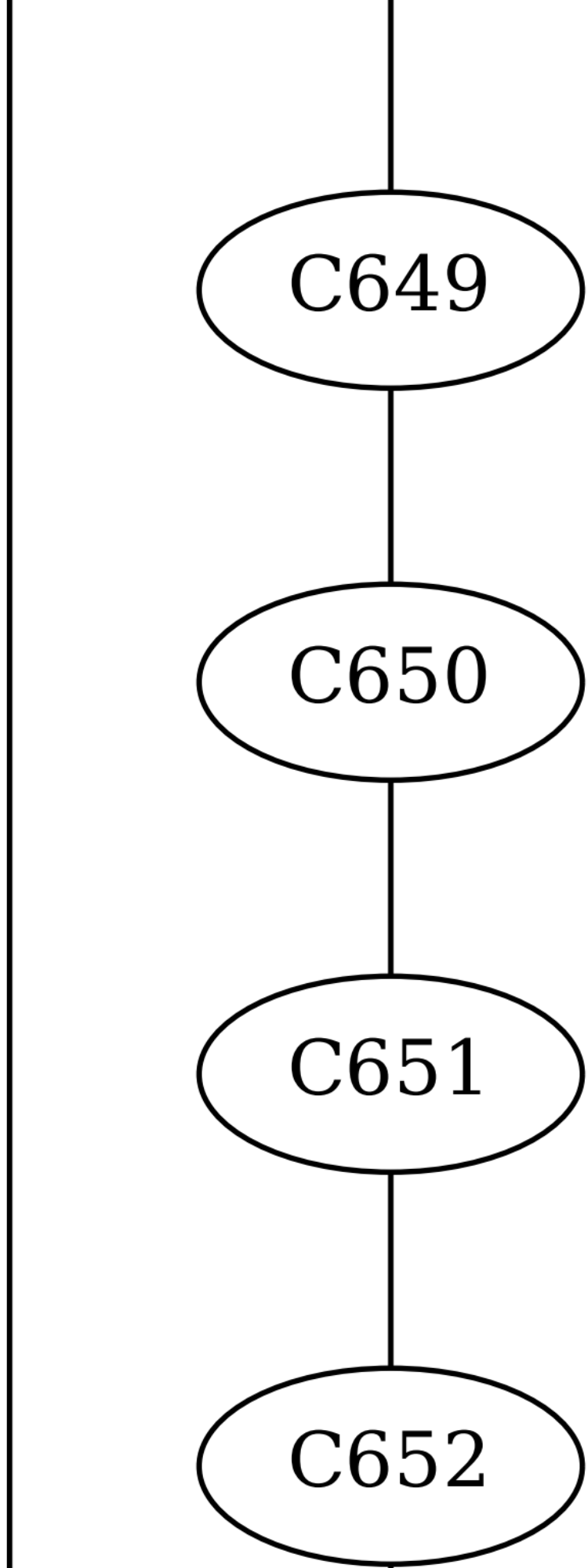
C649
C650
C651
C652

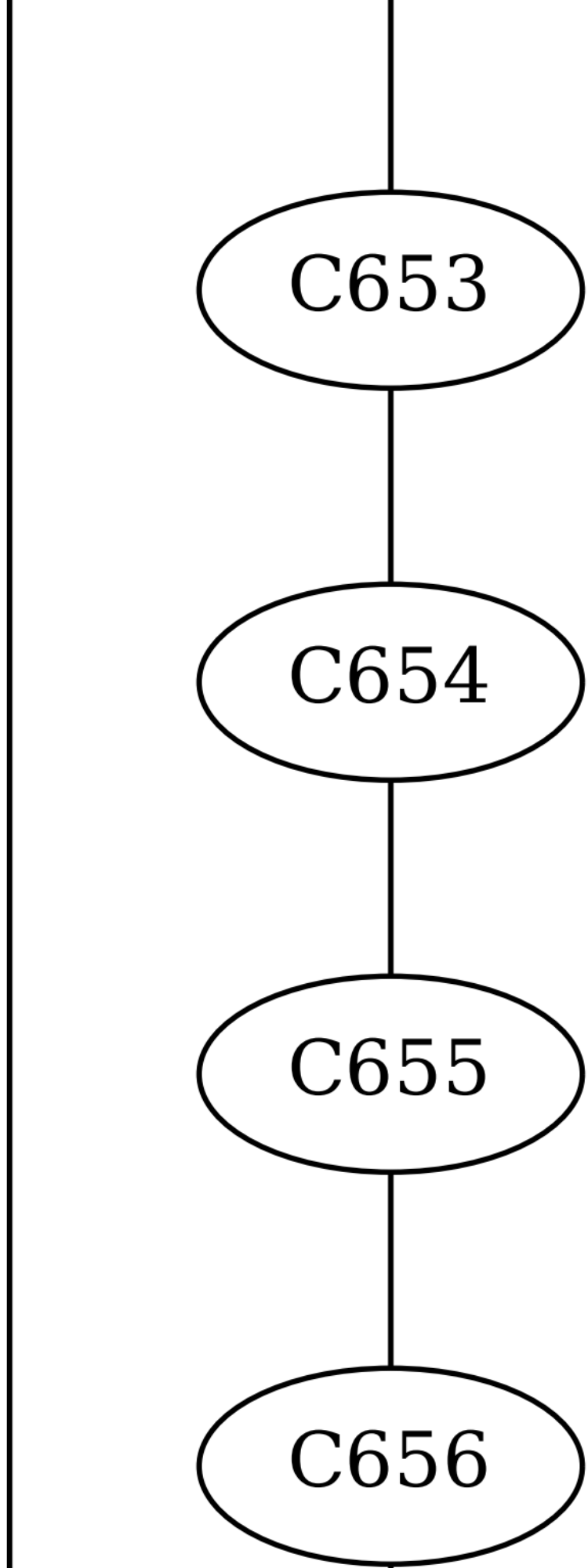
C653
C654
C655
C656

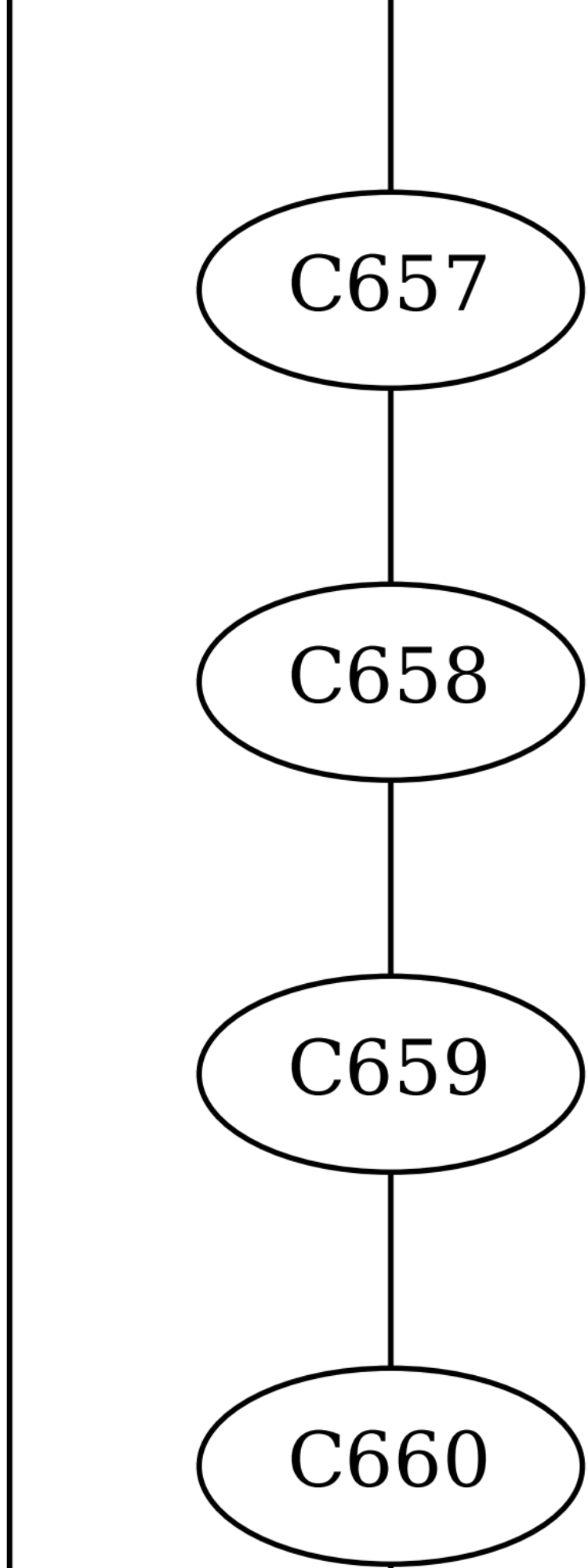
C657
C658
C659
C660

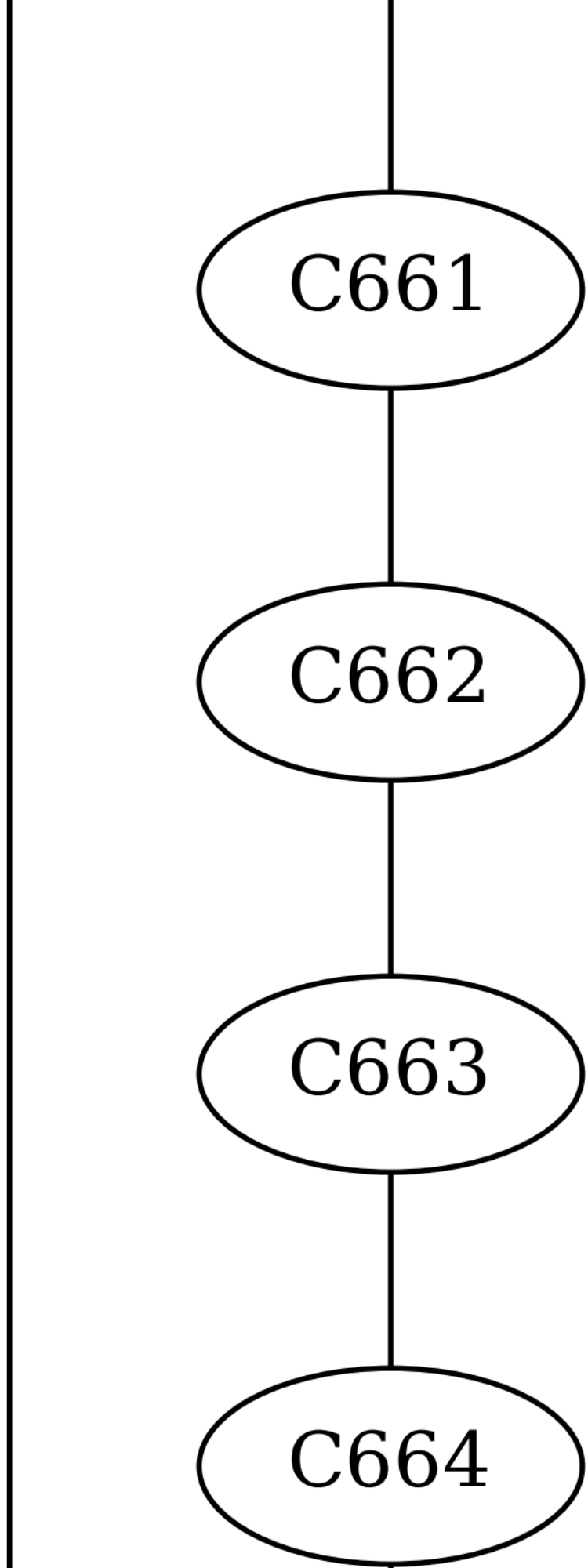
C661
C662
C663
C664

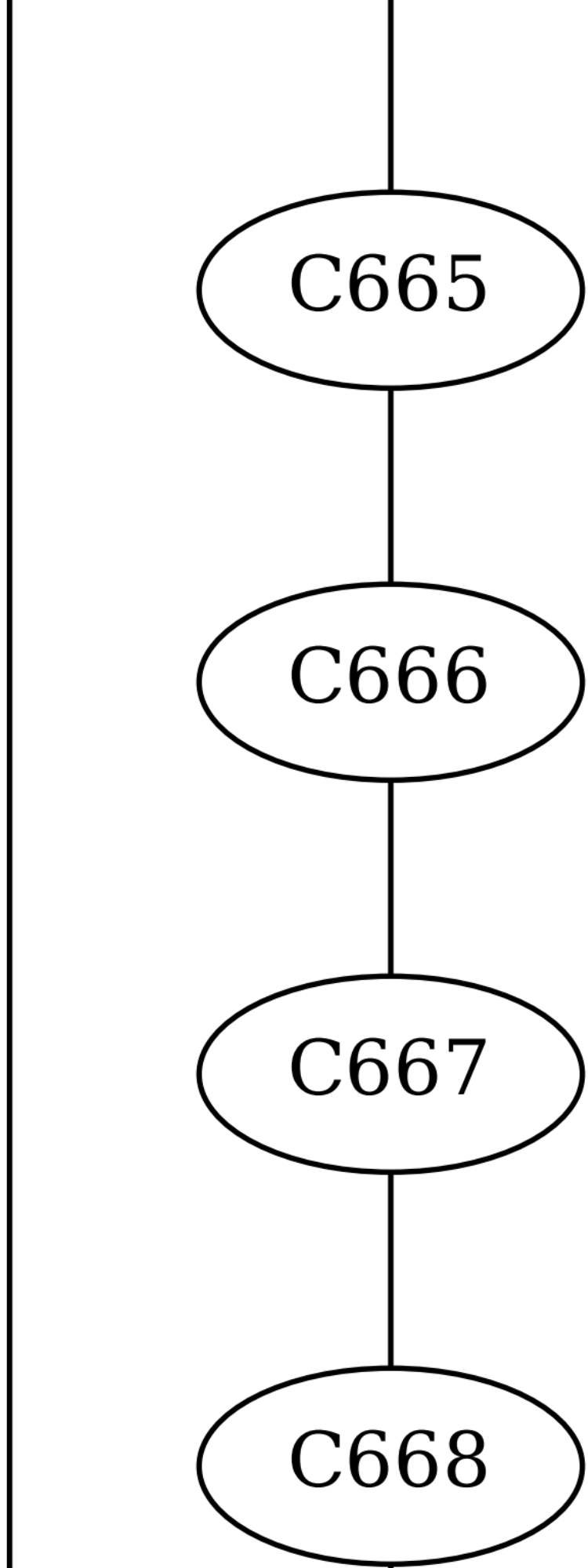
C665
C666
C667
C668

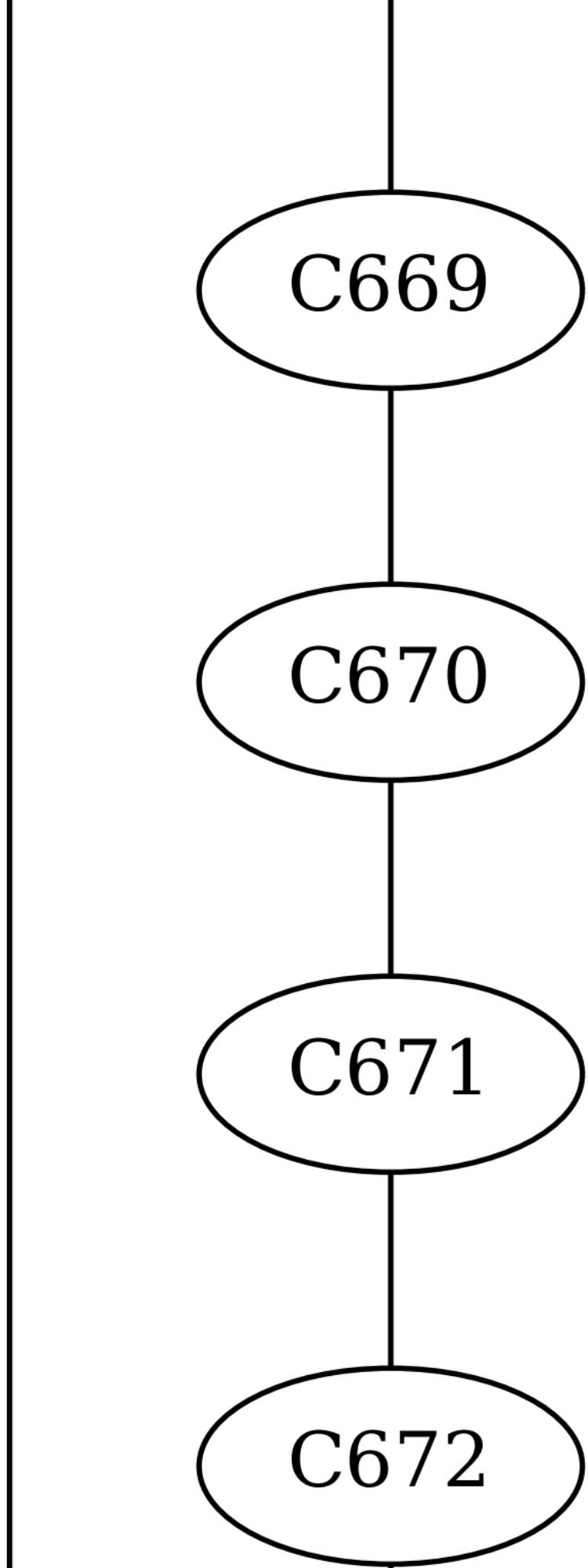
C669
C670
C671
C672

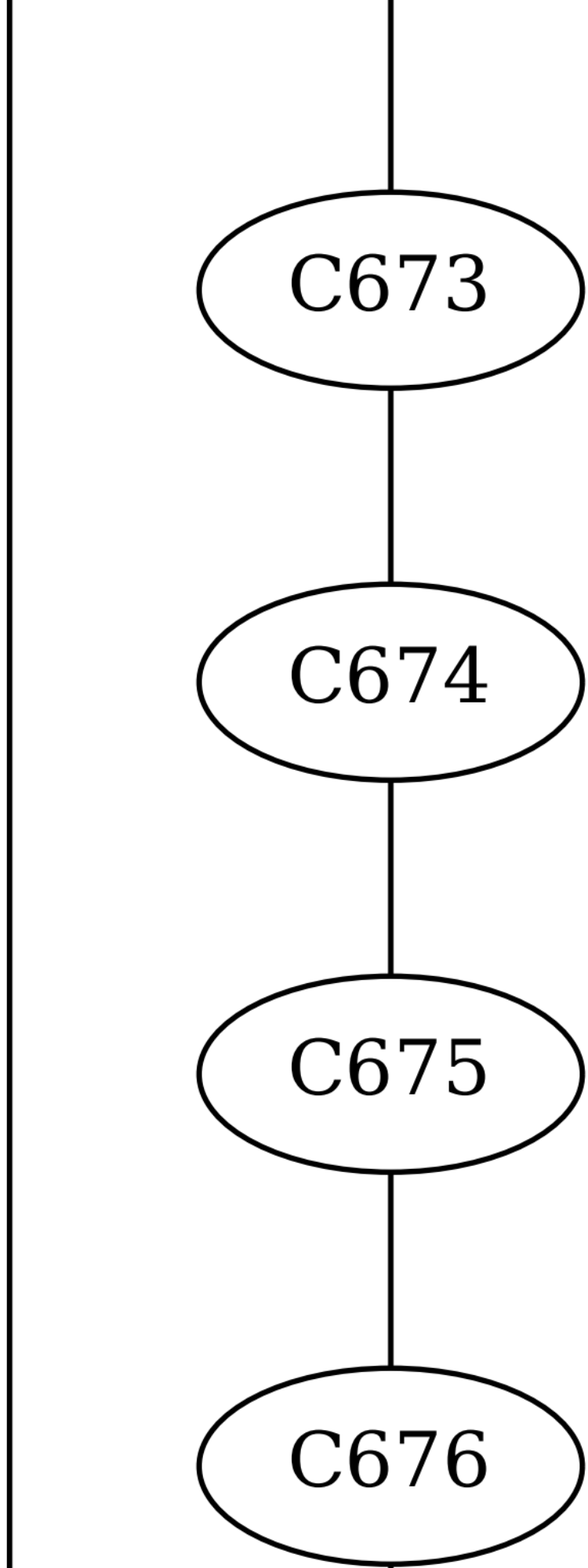
C673
C674
C675
C676

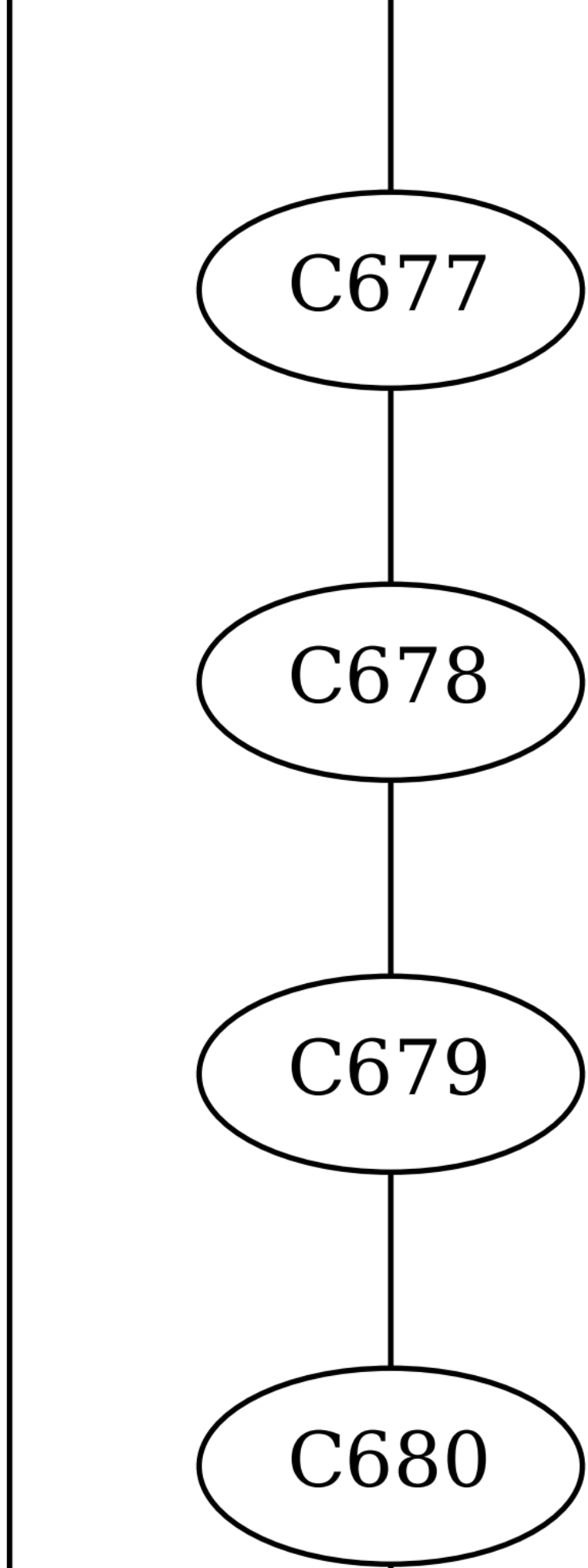
C677
C678
C679
C680

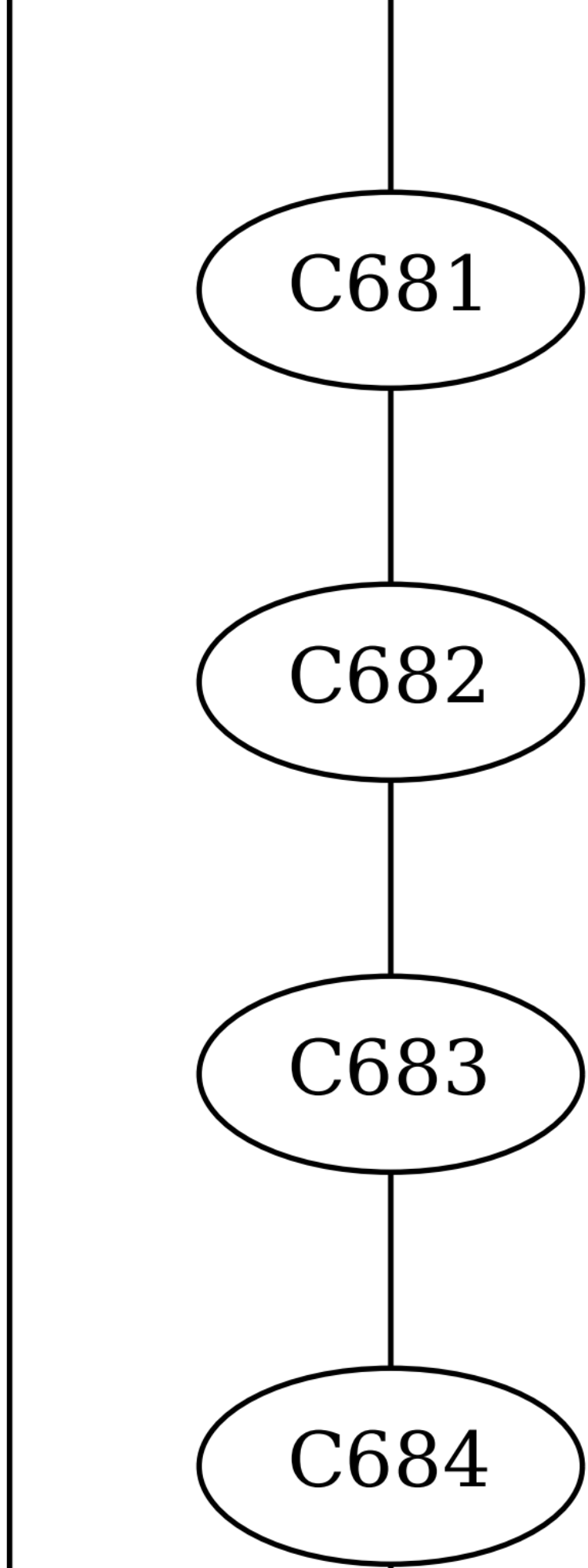
C681
C682
C683
C684

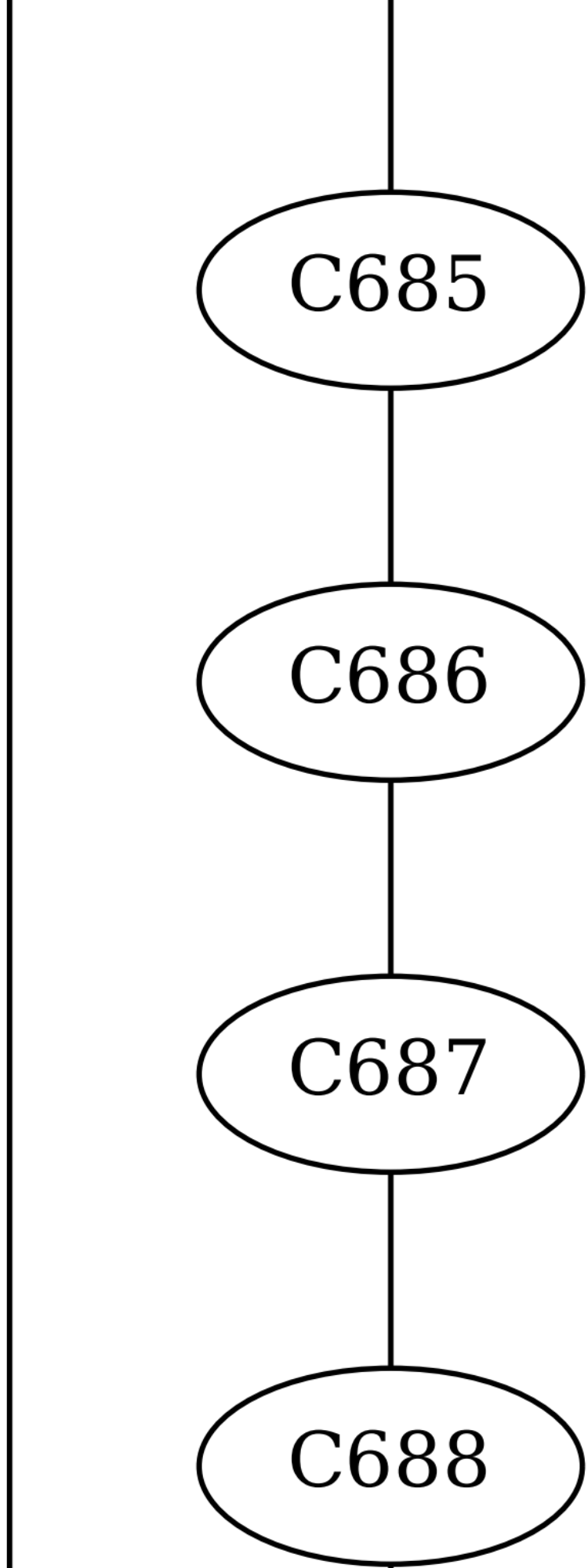
C685
C686
C687
C688

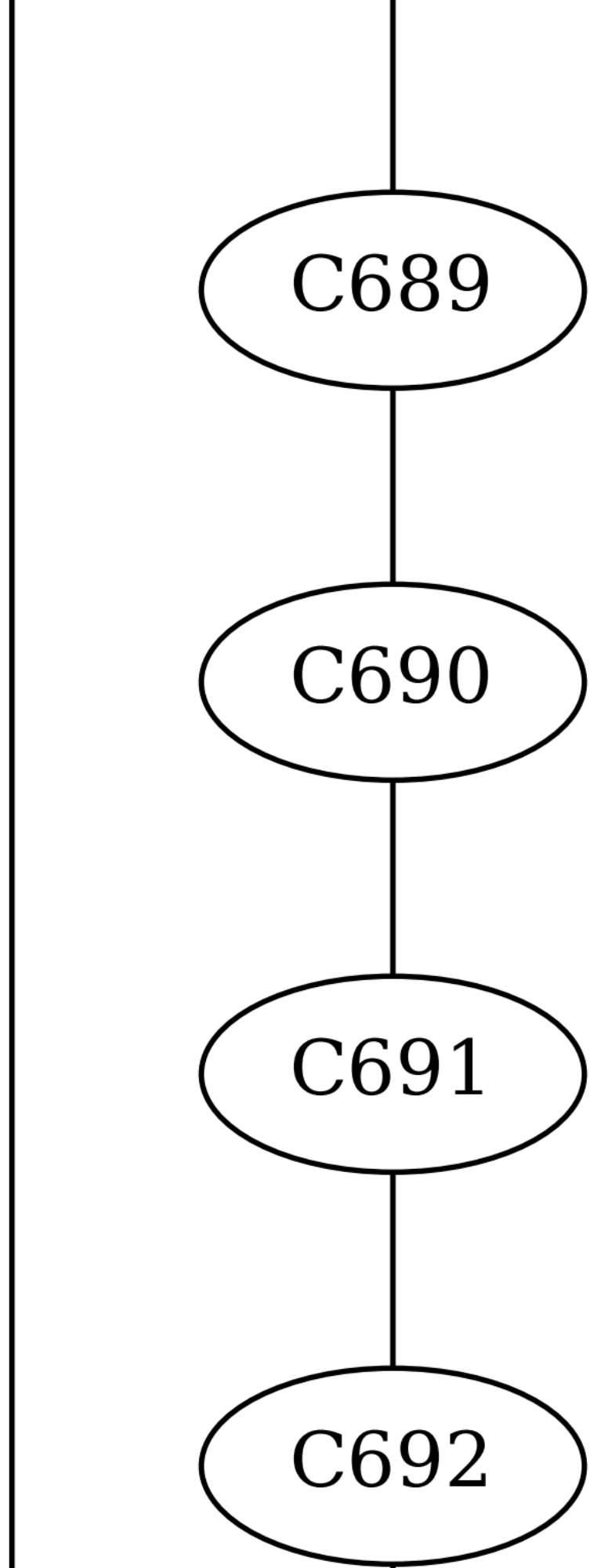
C689
C690
C691
C692

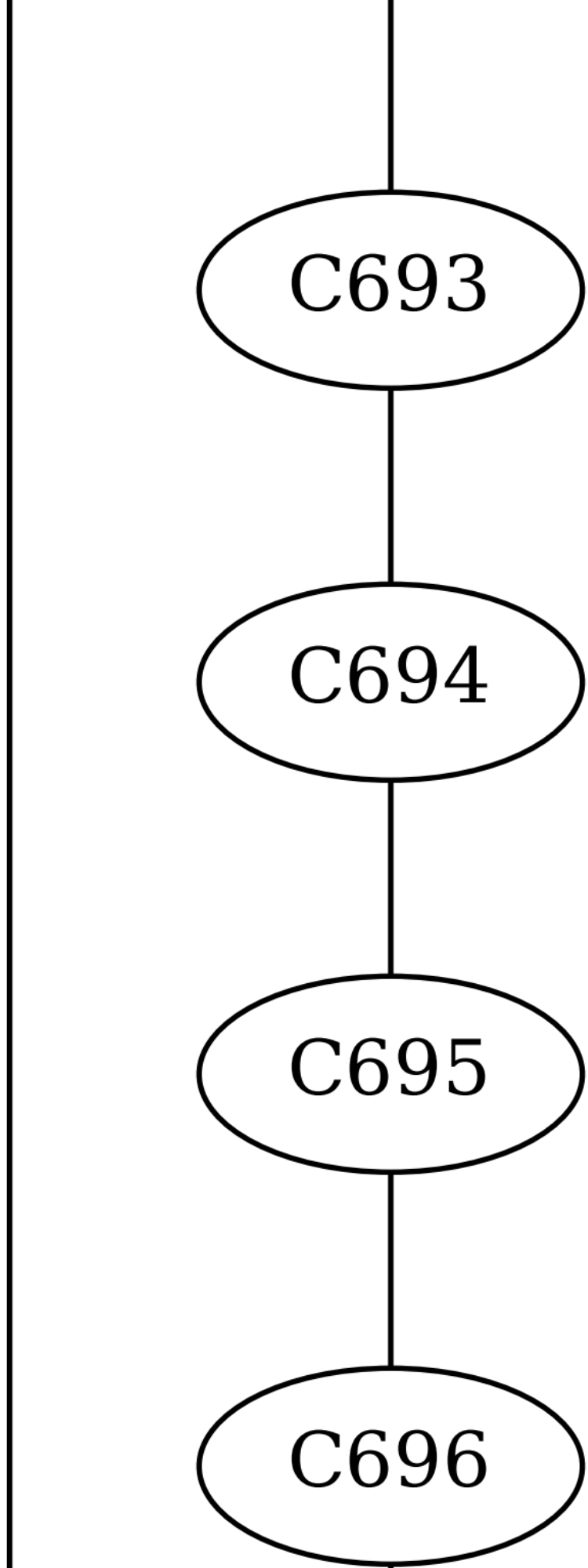
C693
C694
C695
C696

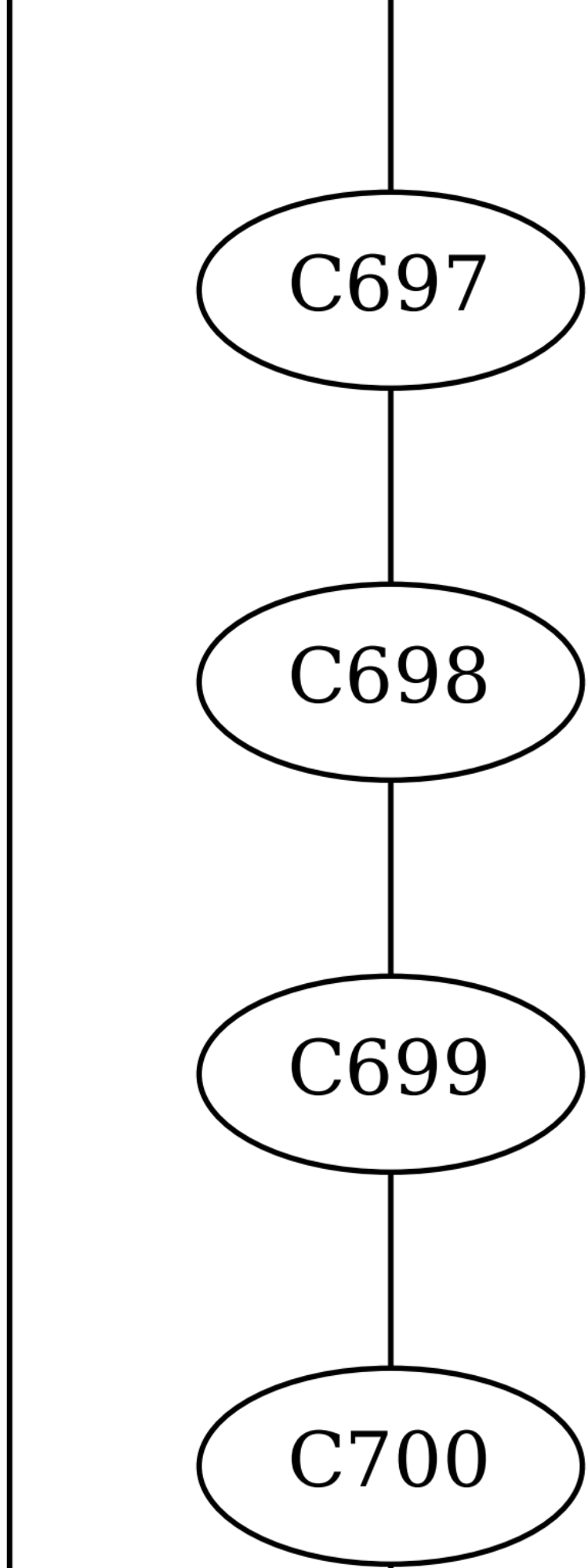
C697
C698
C699
C700

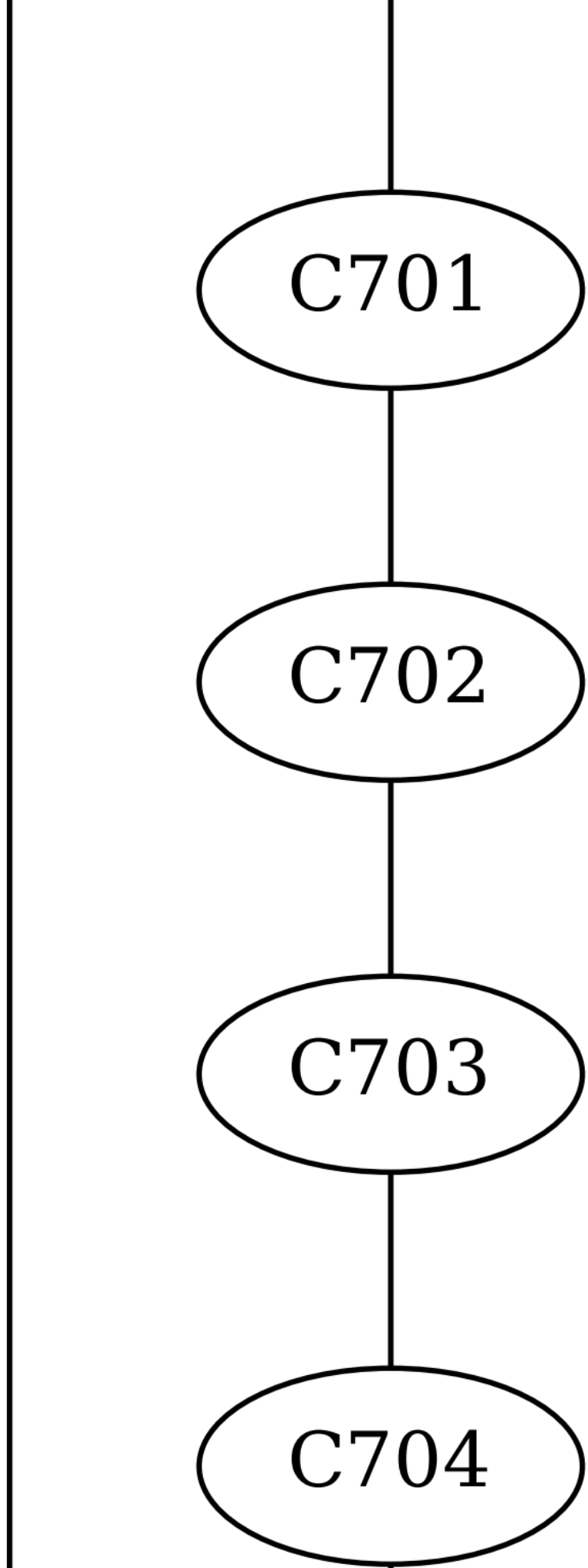
C701
C702
C703
C704

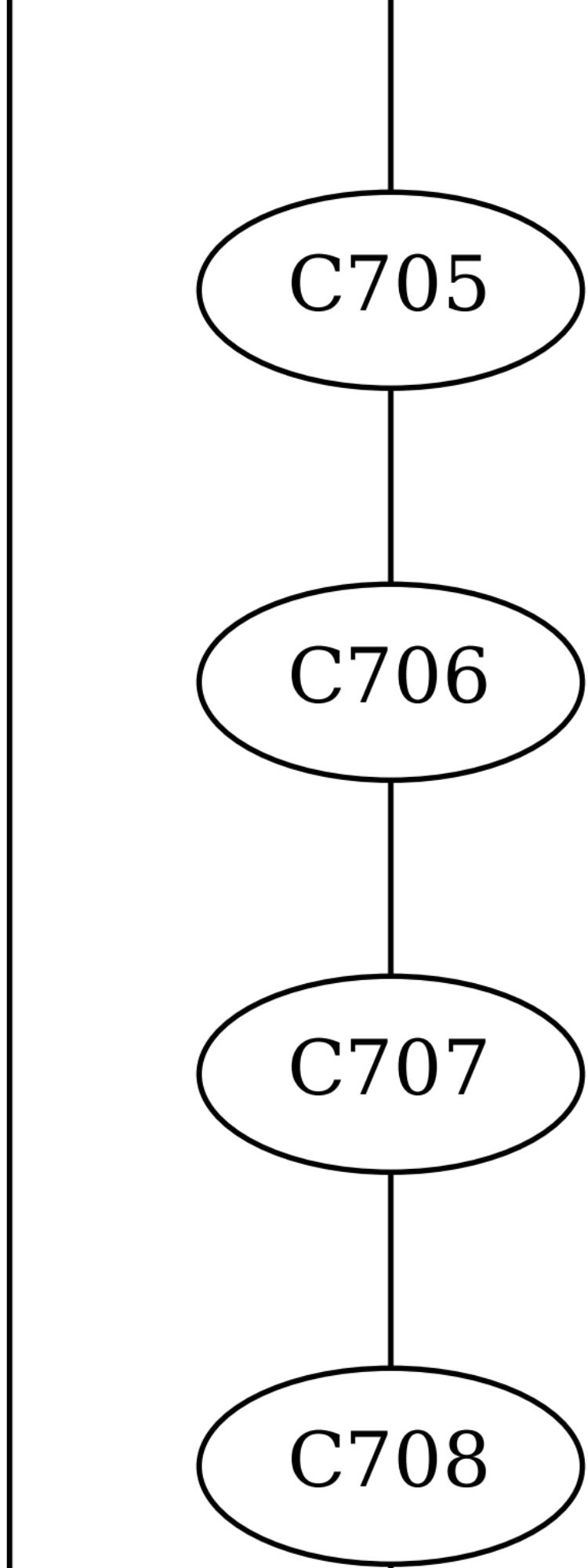
C705
C706
C707
C708

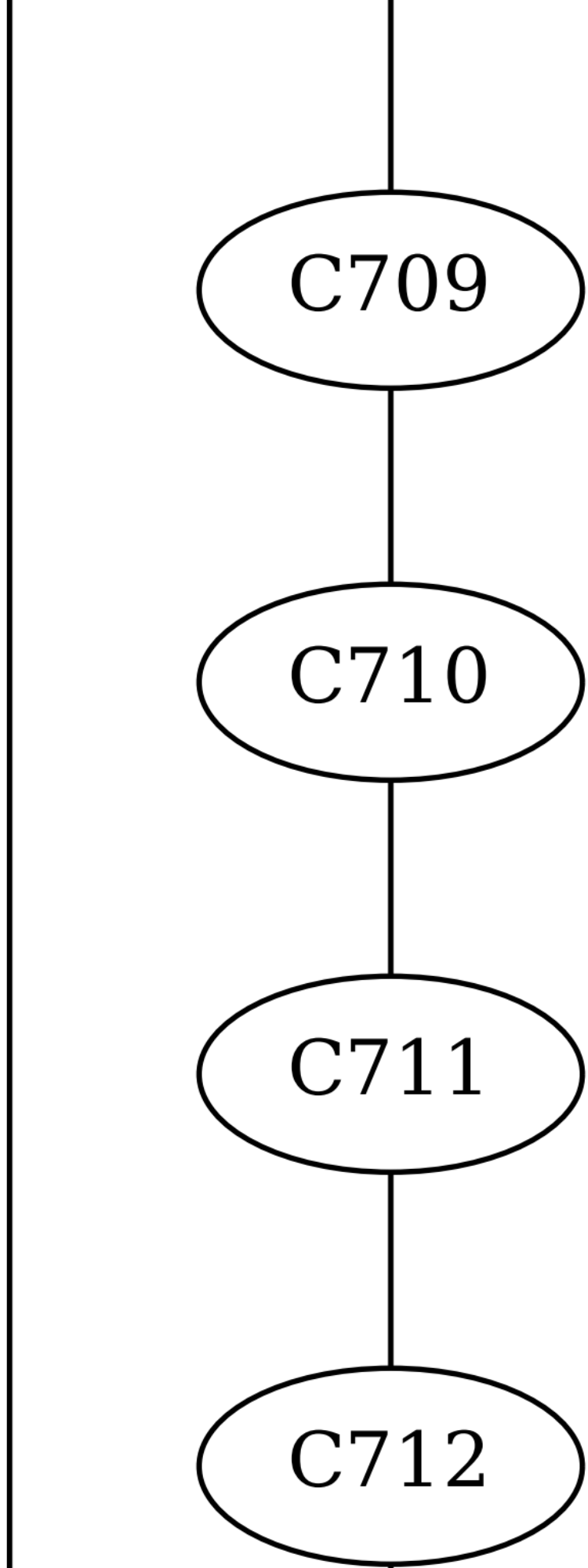
C709
C710
C711
C712

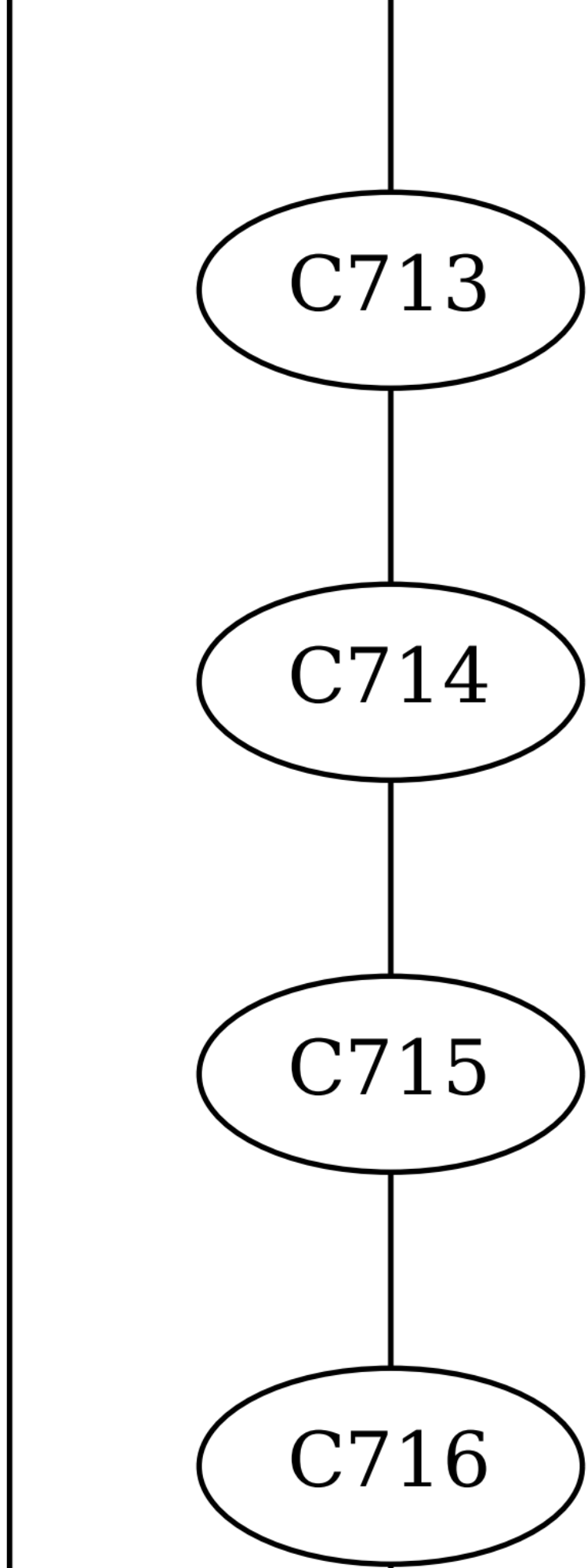
C713
C714
C715
C716

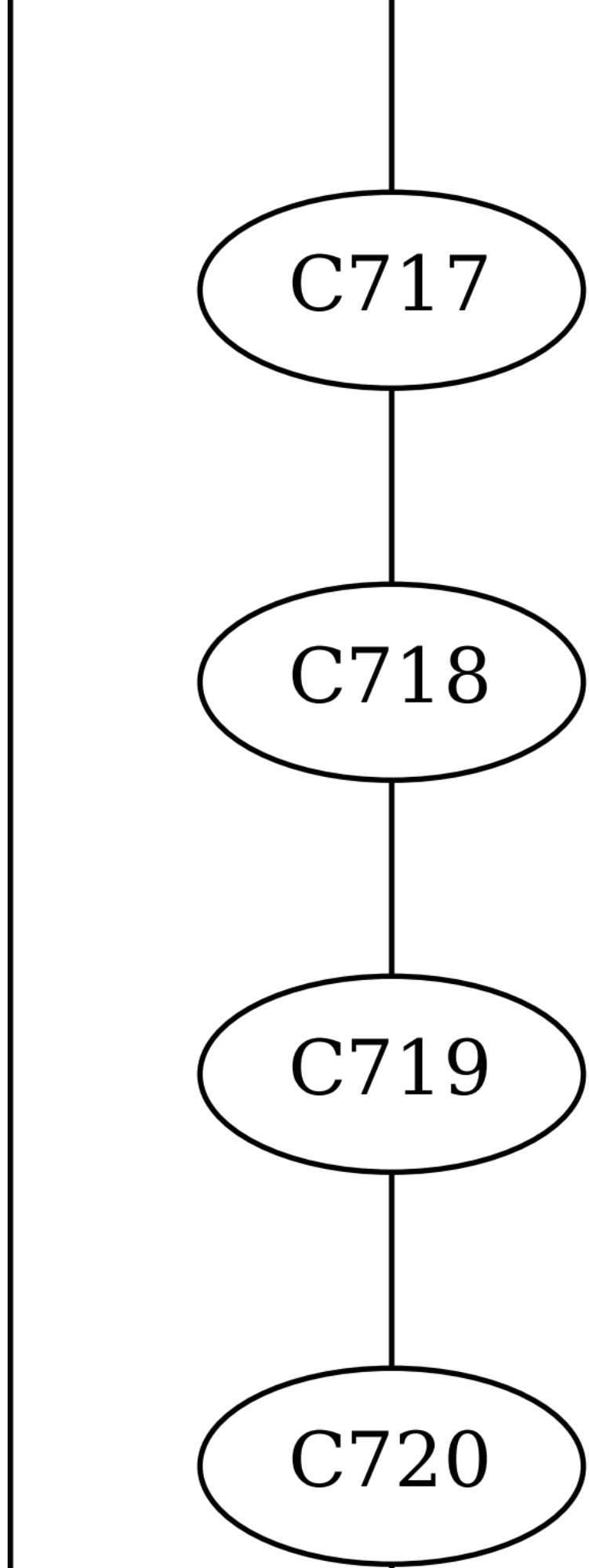
C717
C718
C719
C720

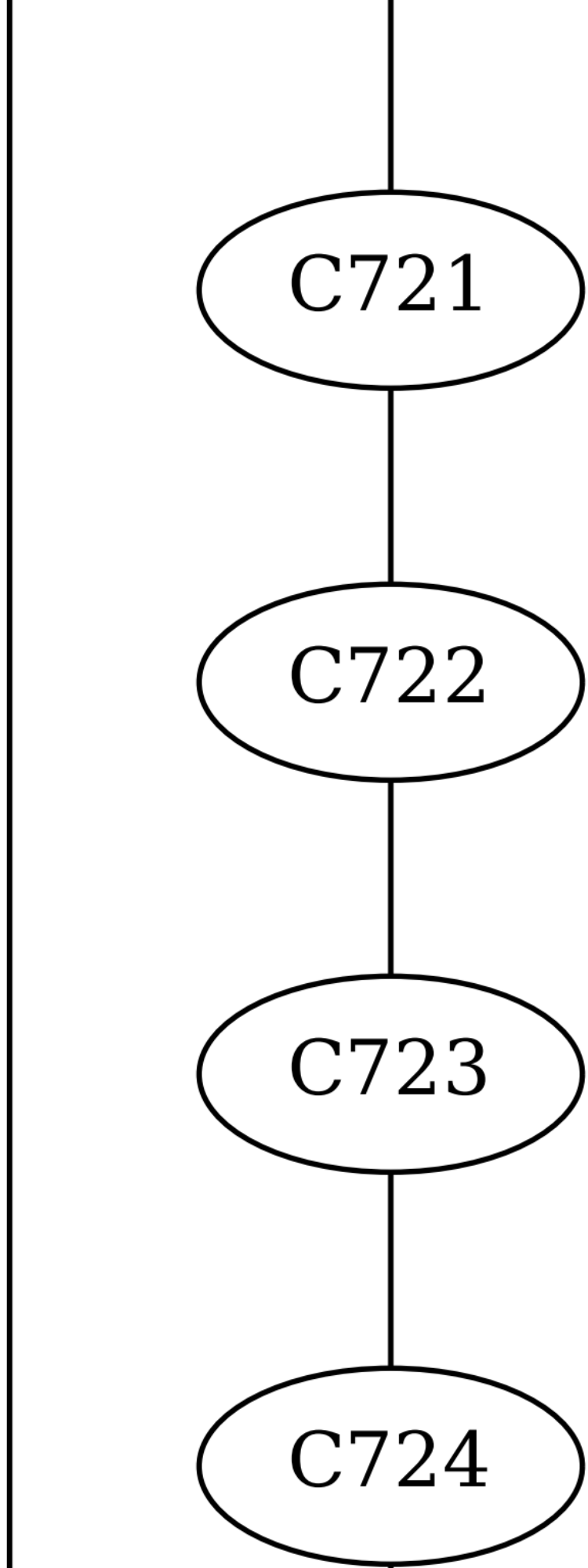
C721
C722
C723
C724

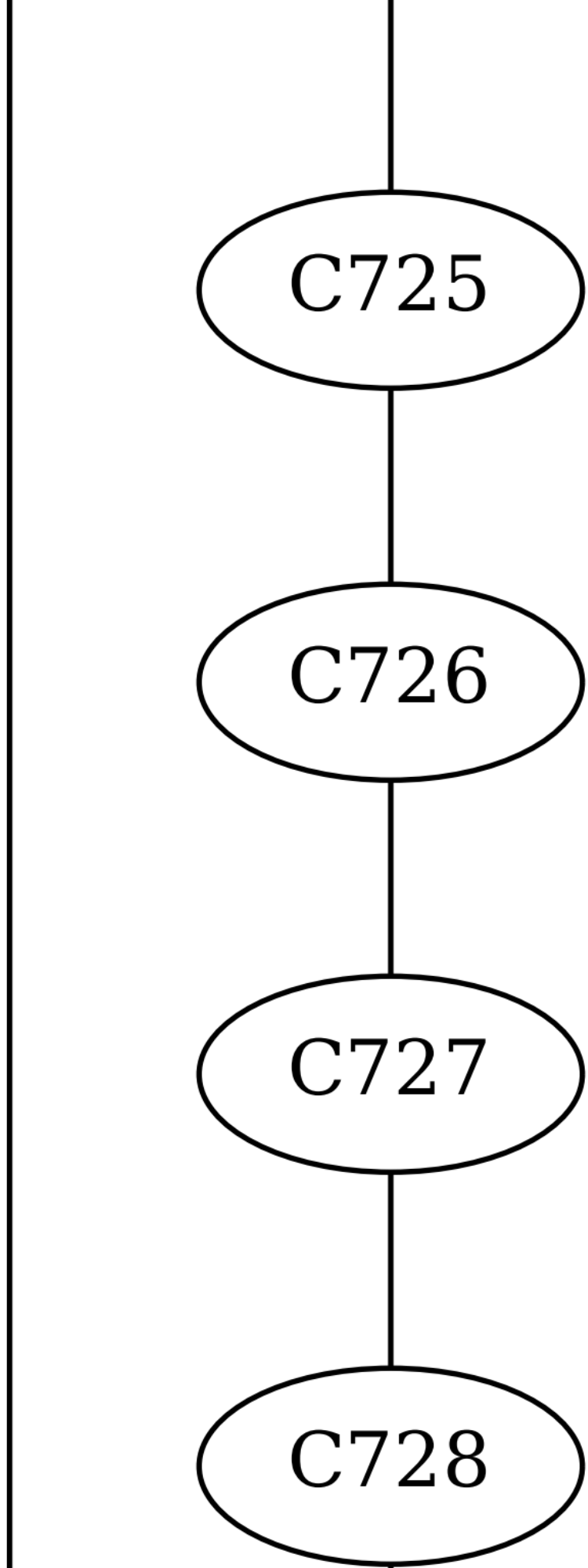
C725
C726
C727
C728

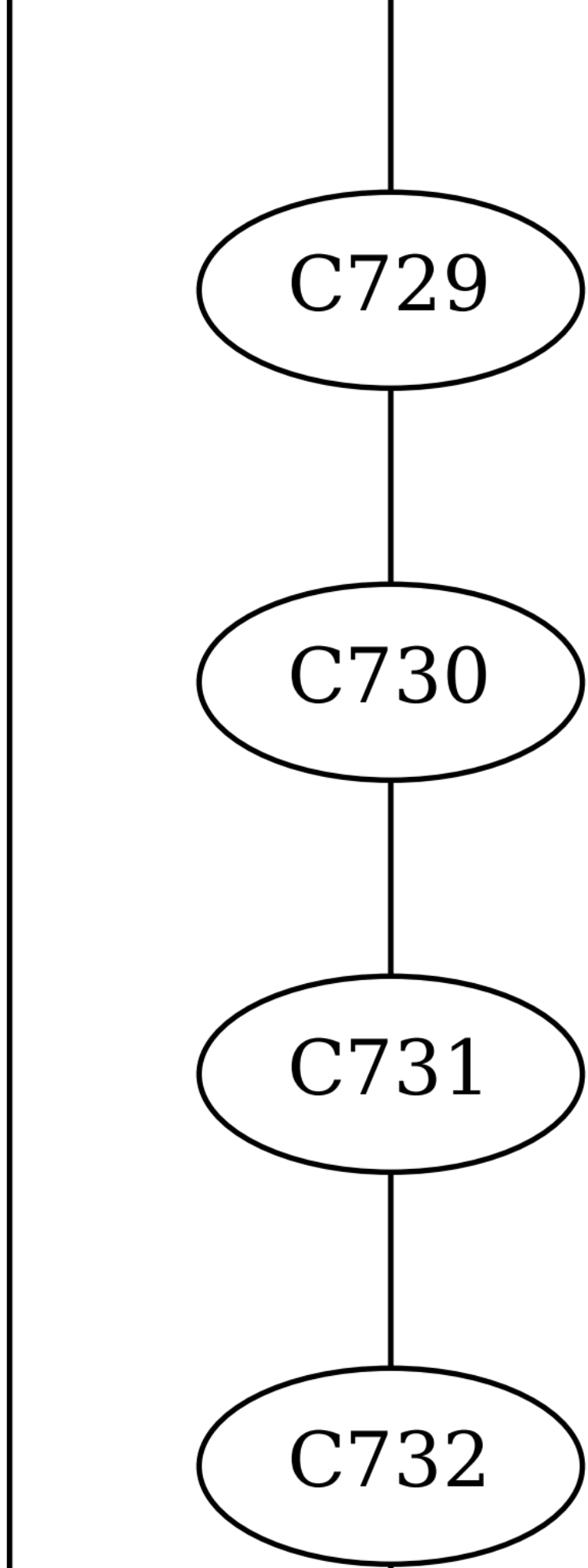
C729
C730
C731
C732

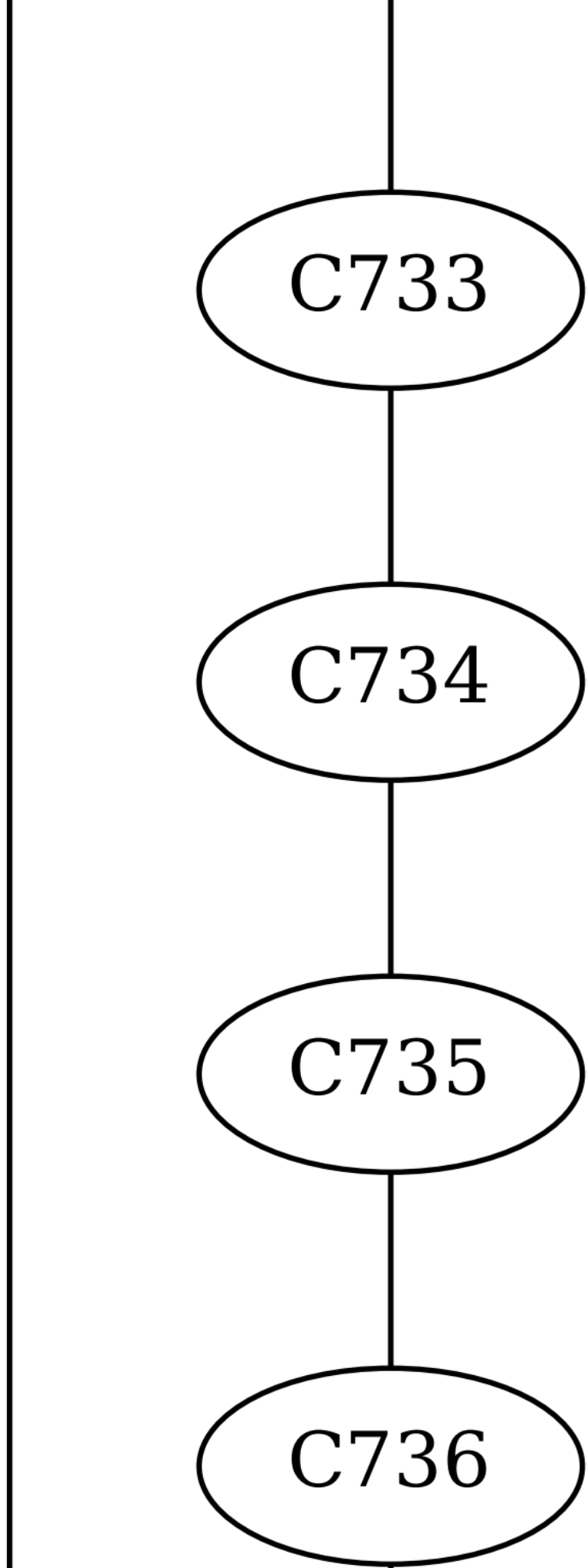
C733
C734
C735
C736

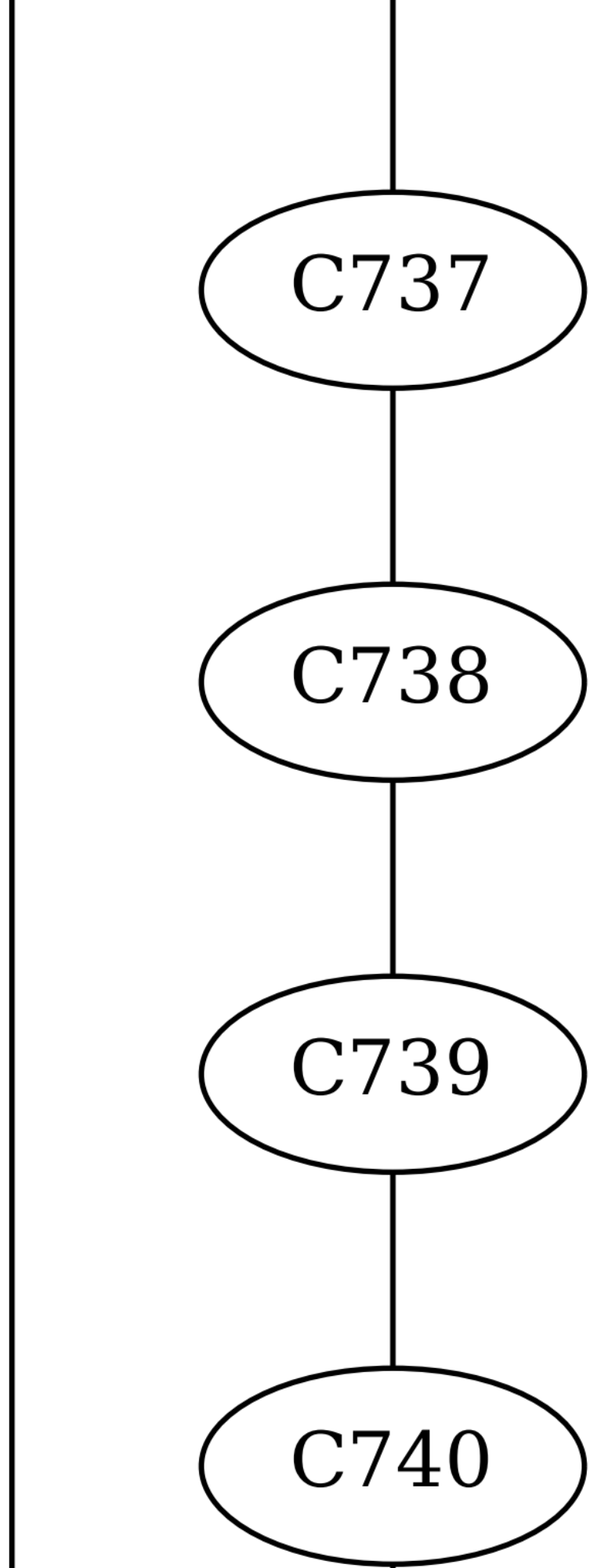
C737
C738
C739
C740

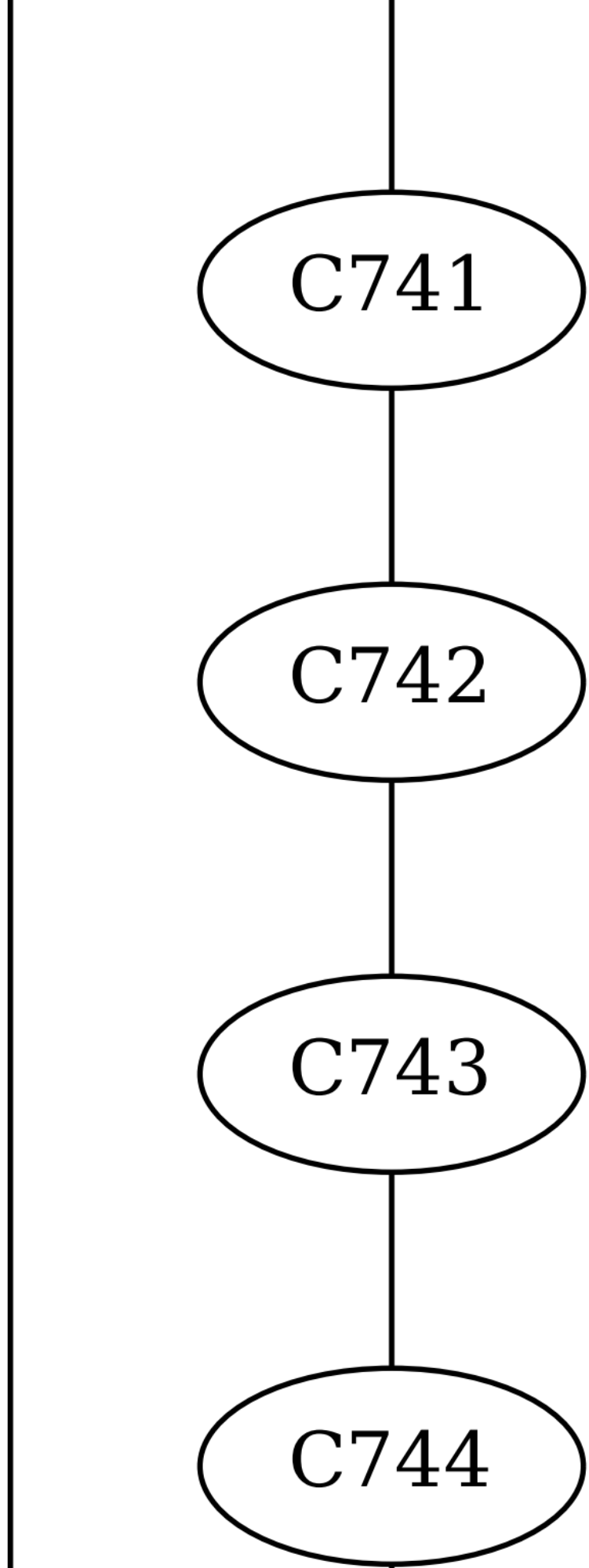
C741
C742
C743
C744

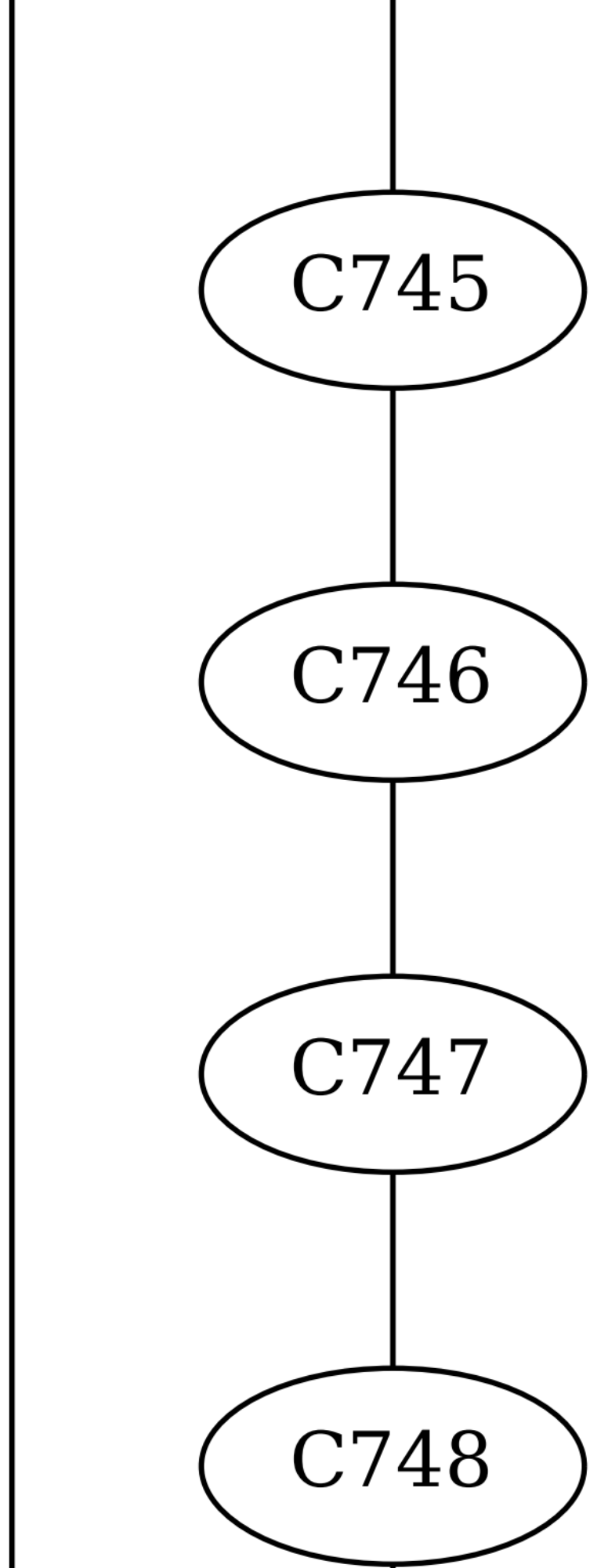
C745
C746
C747
C748

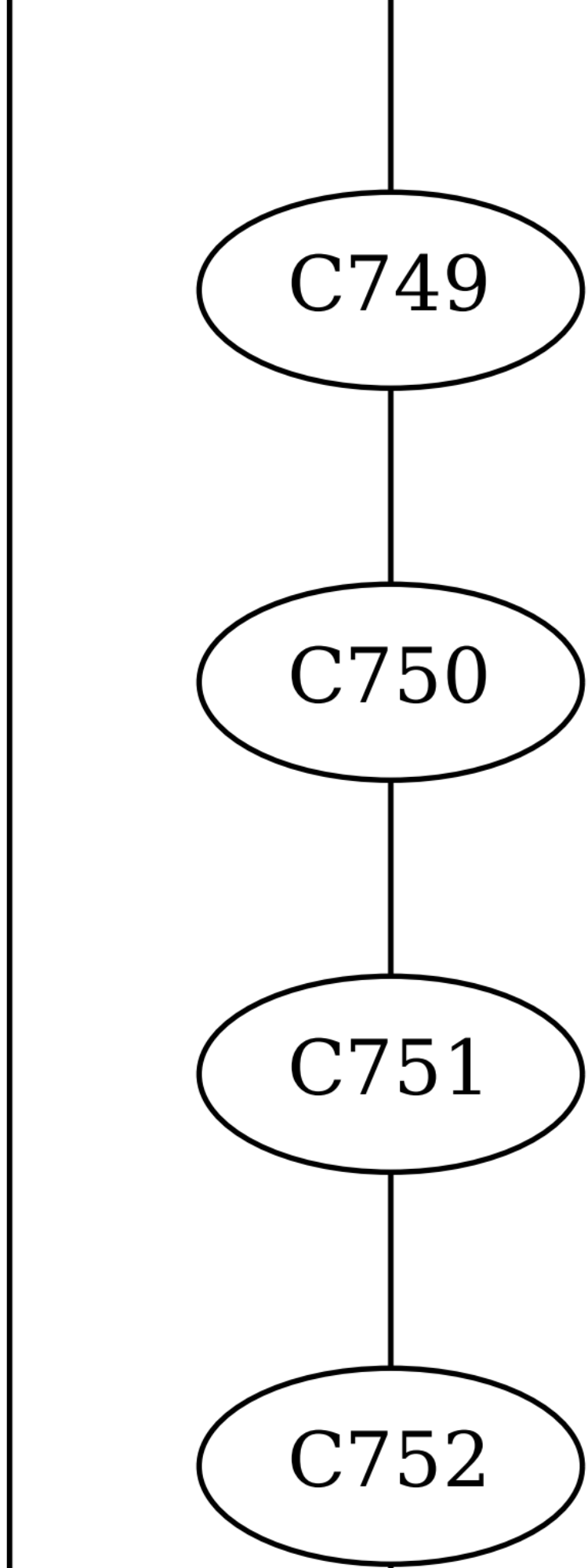
C749
C750
C751
C752

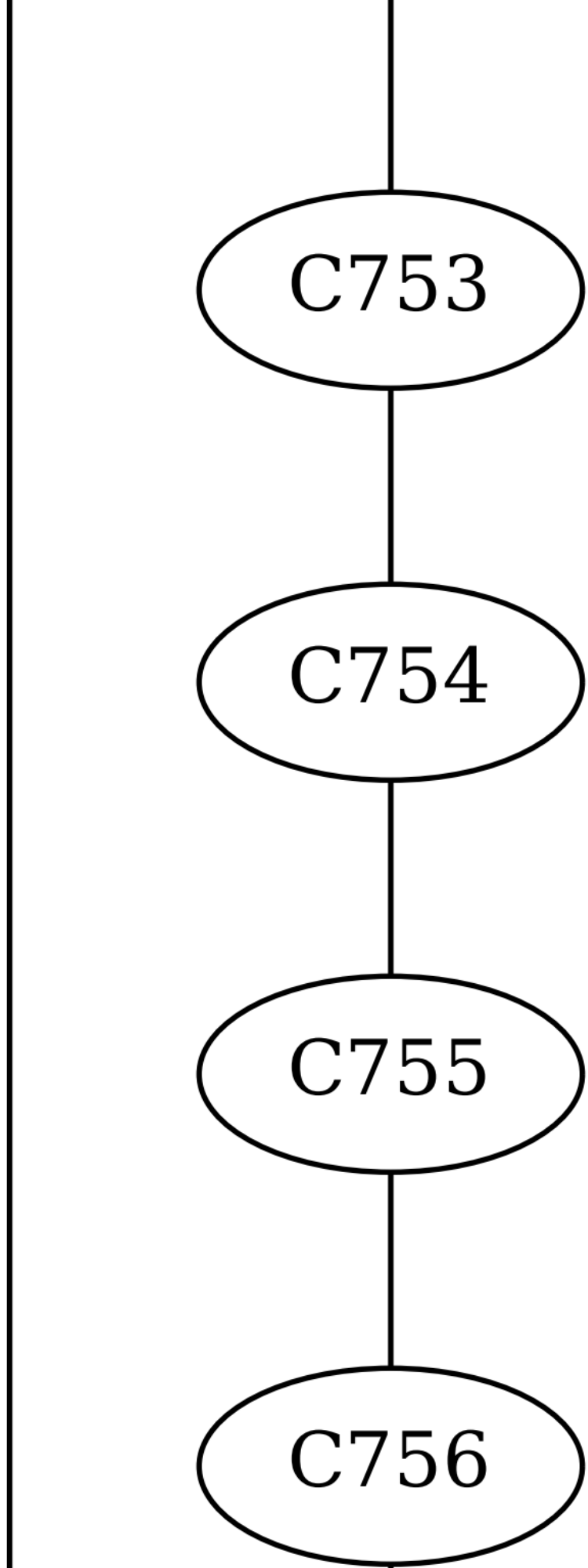
C753
C754
C755
C756

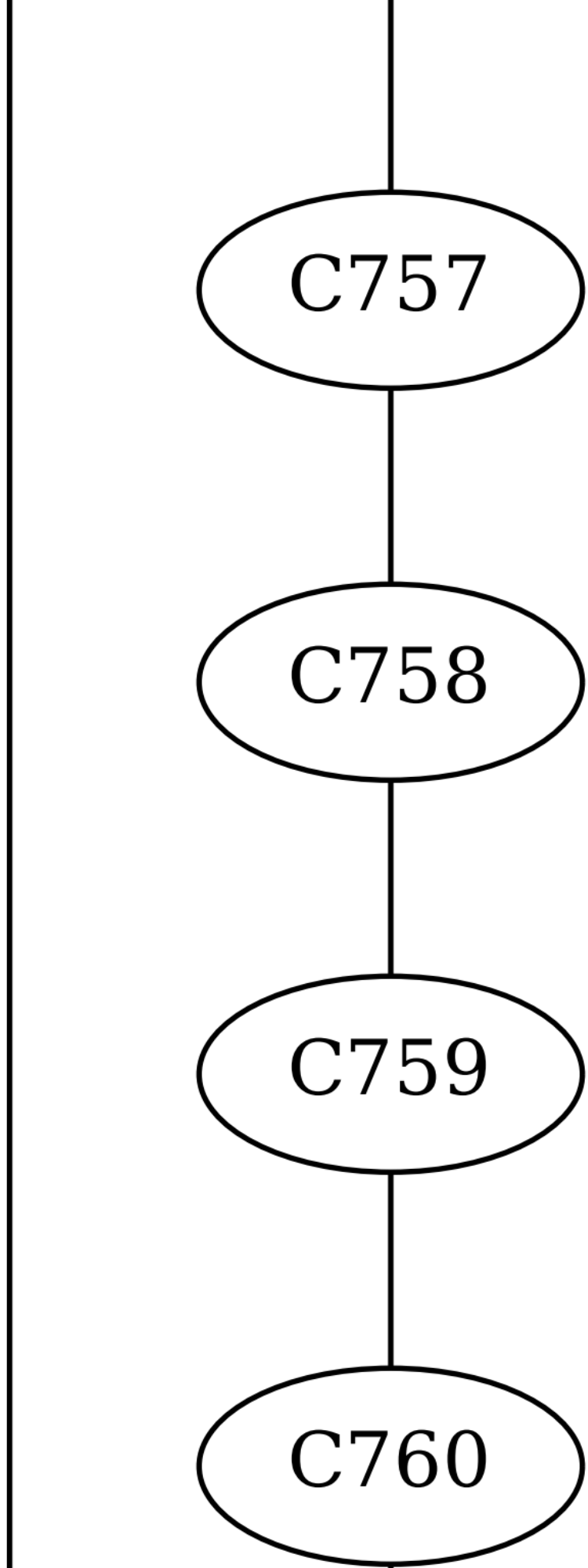
C757
C758
C759
C760

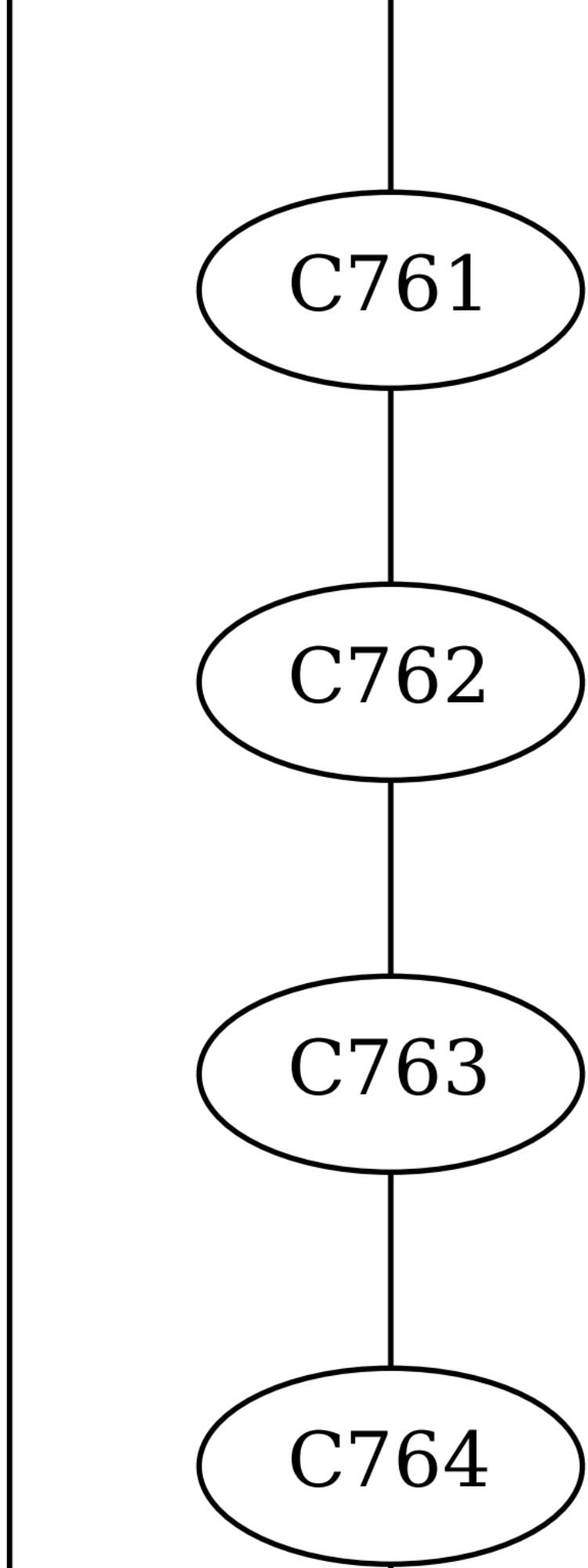
C761
C762
C763
C764

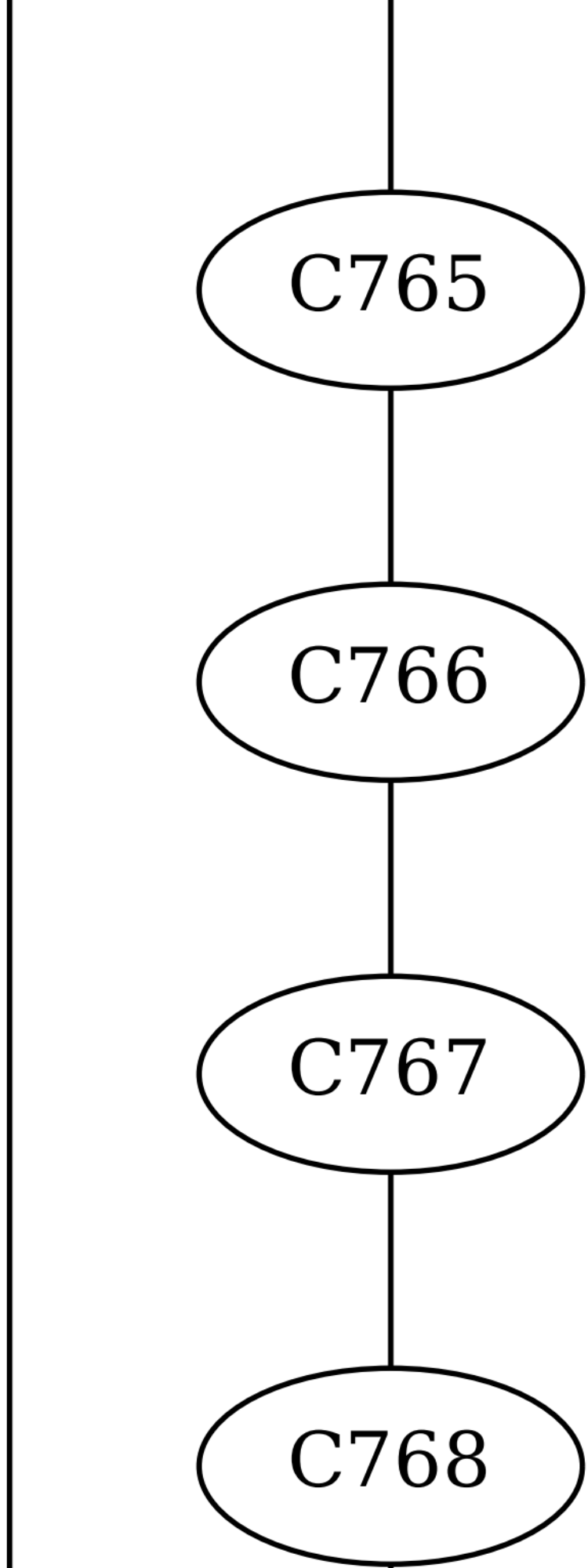
C765
C766
C767
C768

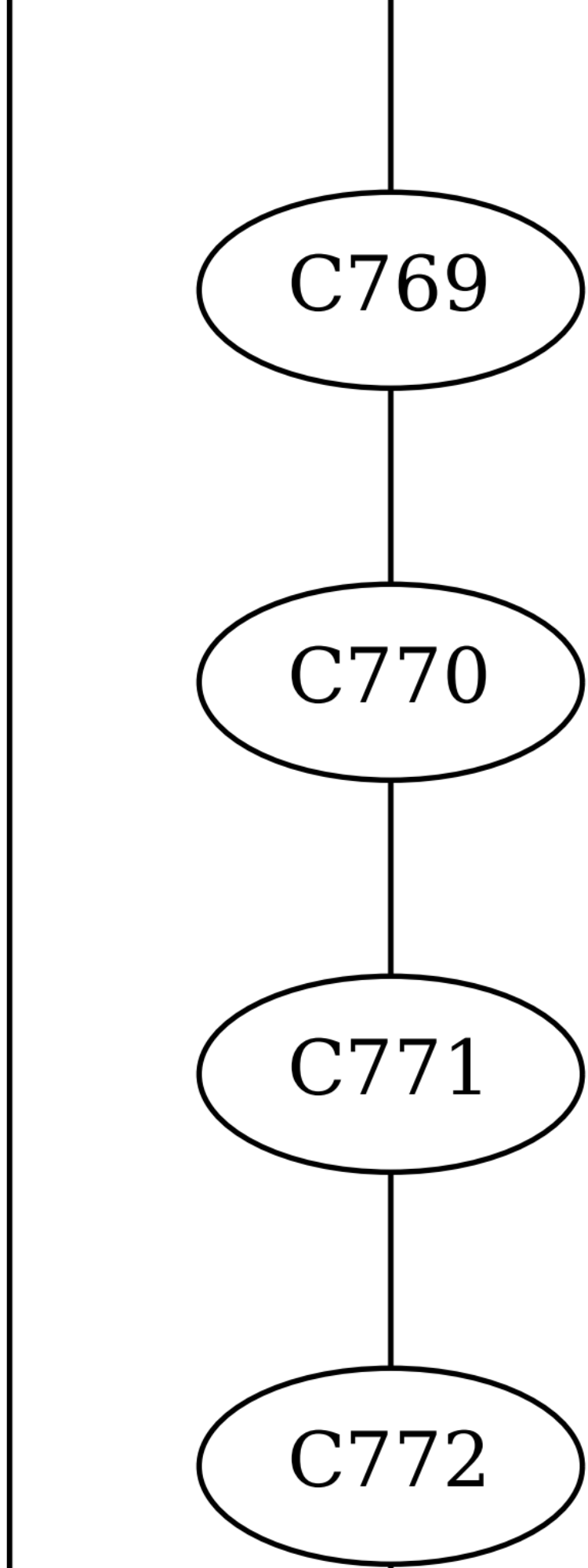
C769
C770
C771
C772

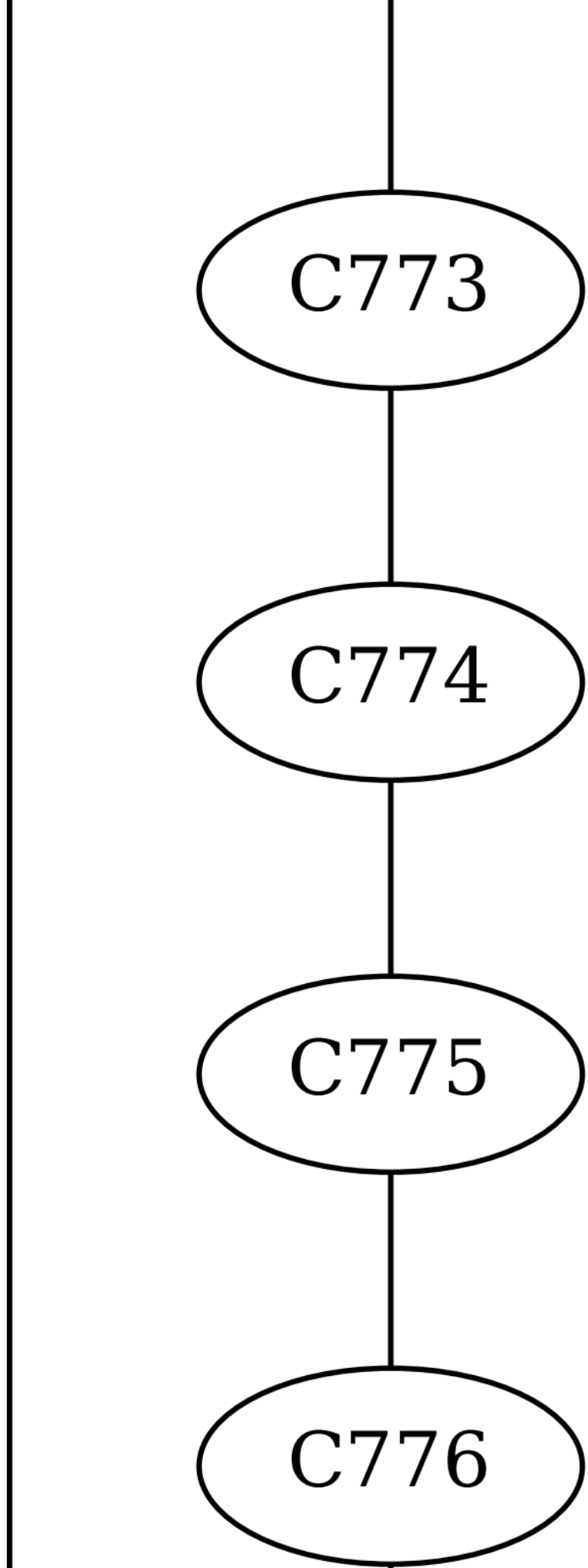
C773
C774
C775
C776

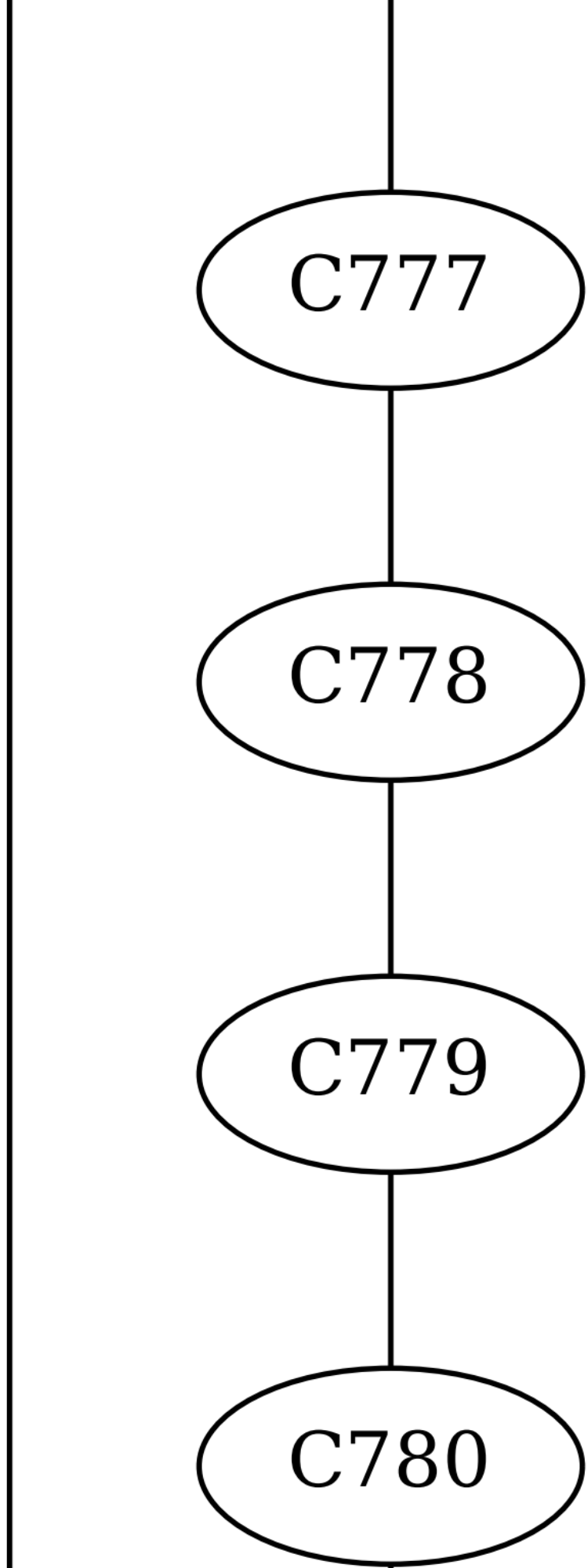
C777
C778
C779
C780

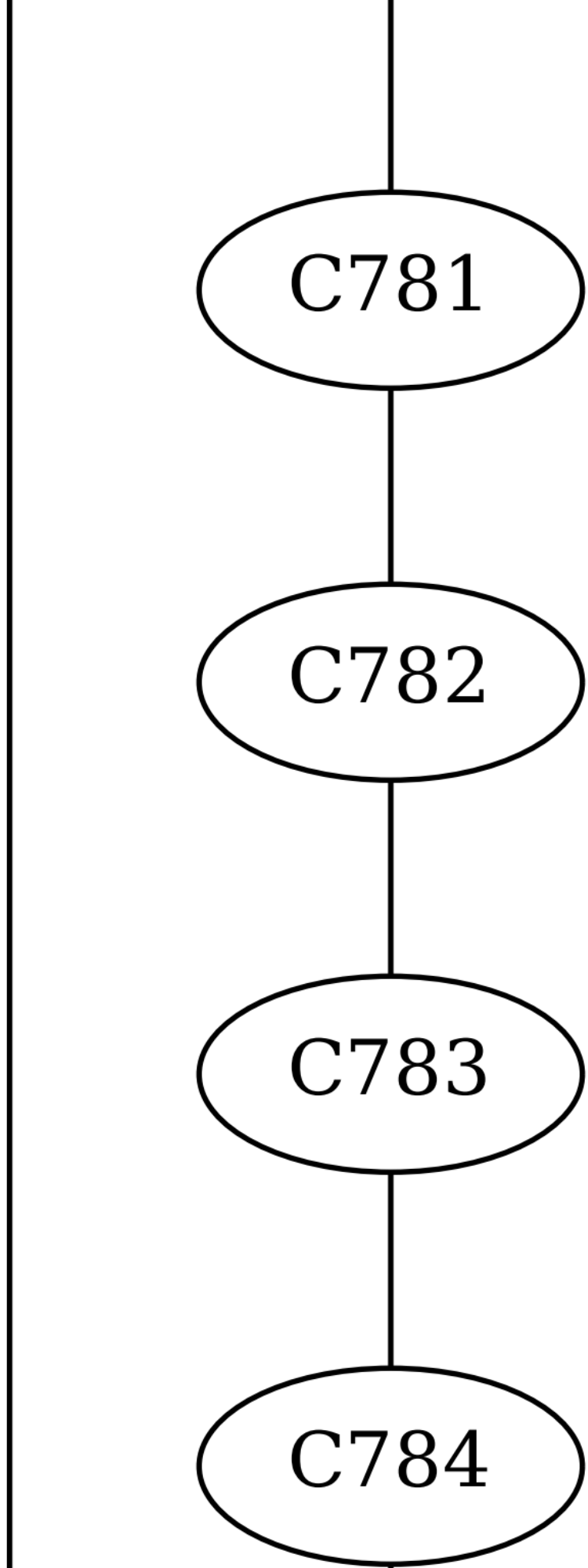
C781
C782
C783
C784

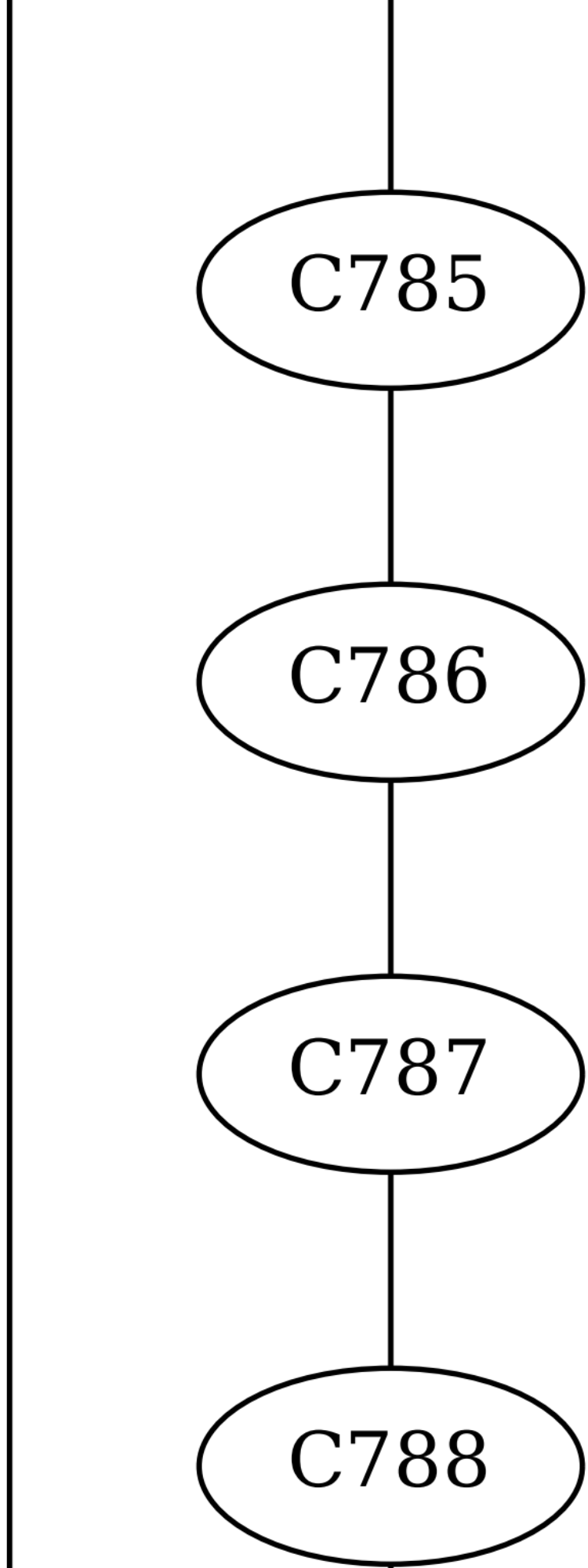
C785
C786
C787
C788

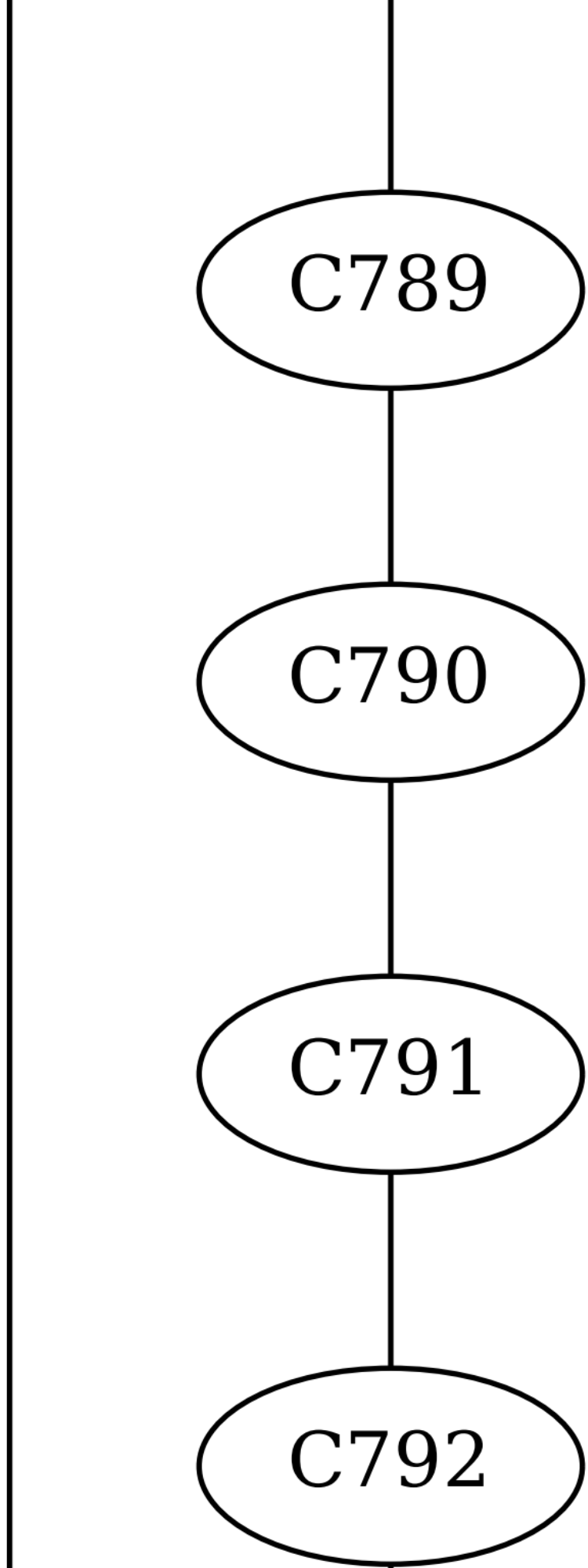
C789
C790
C791
C792

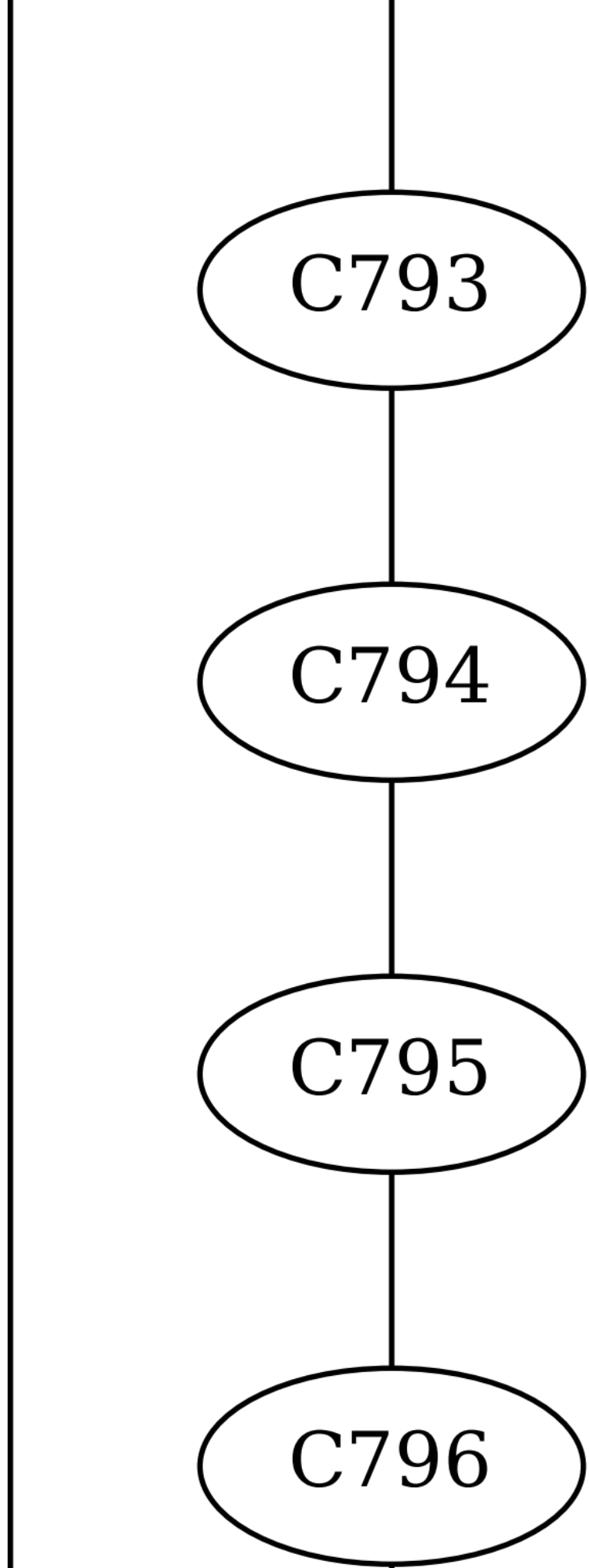
C793
C794
C795
C796

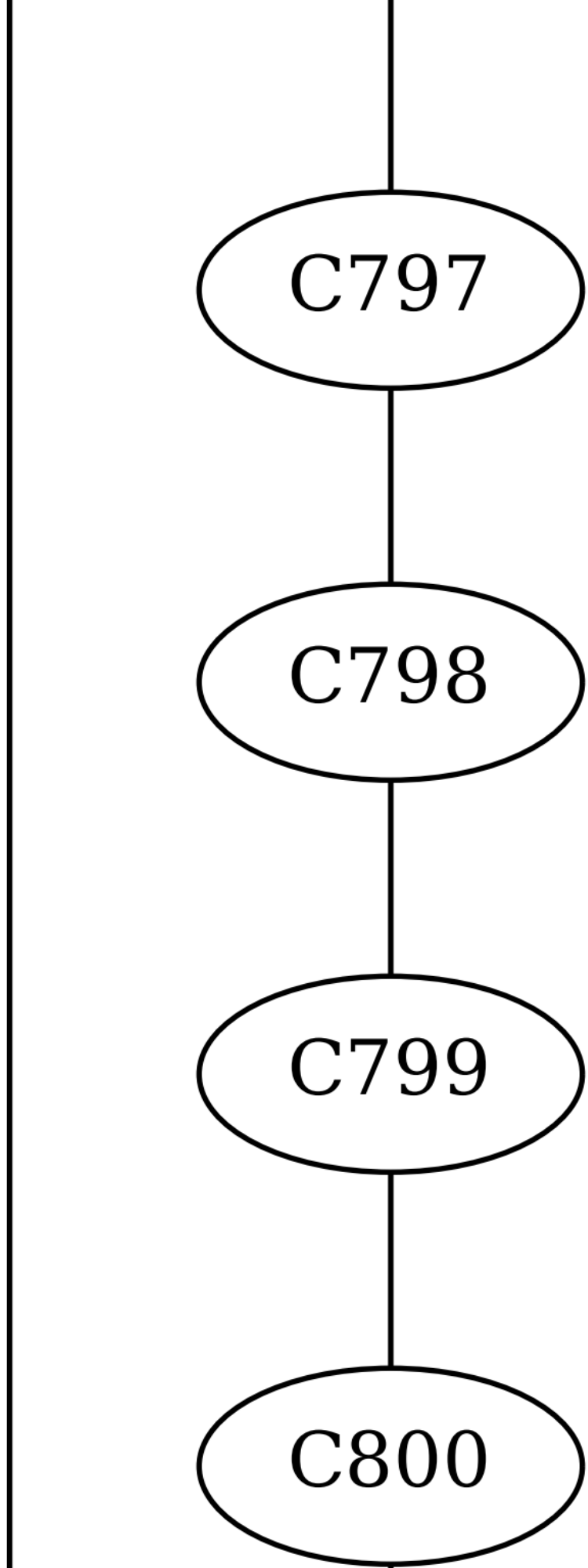
C797
C798
C799
C800

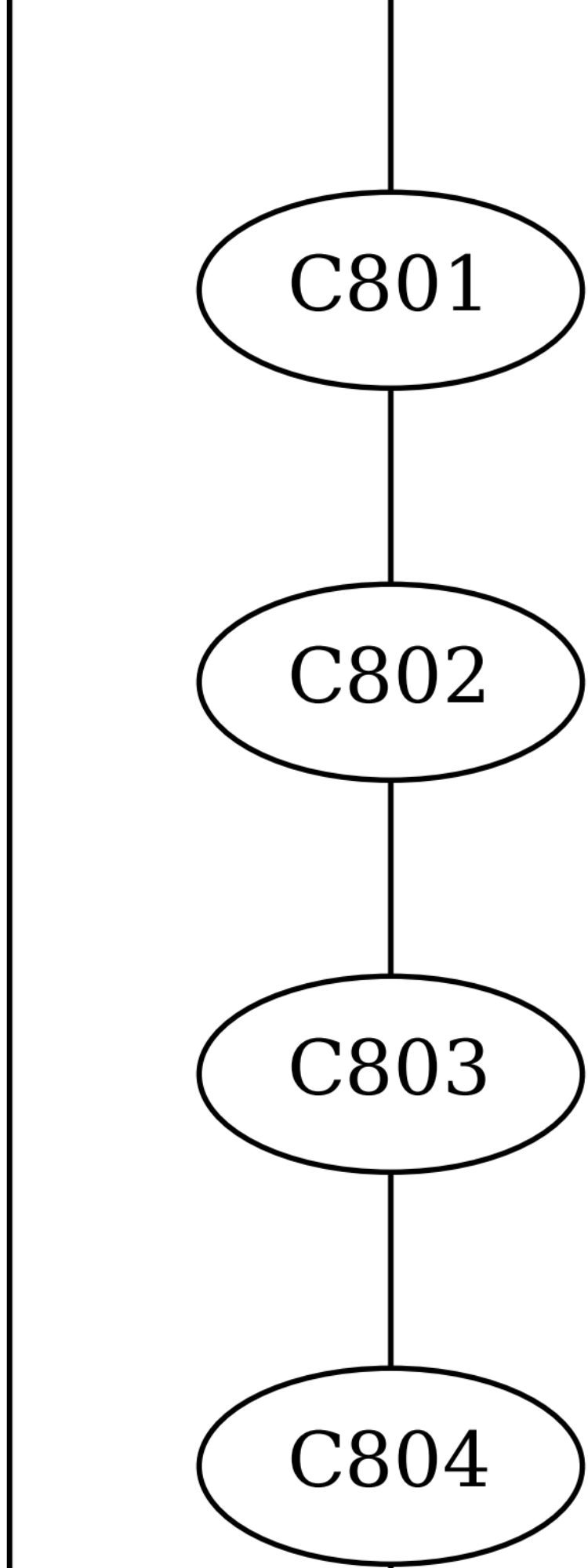
C801
C802
C803
C804

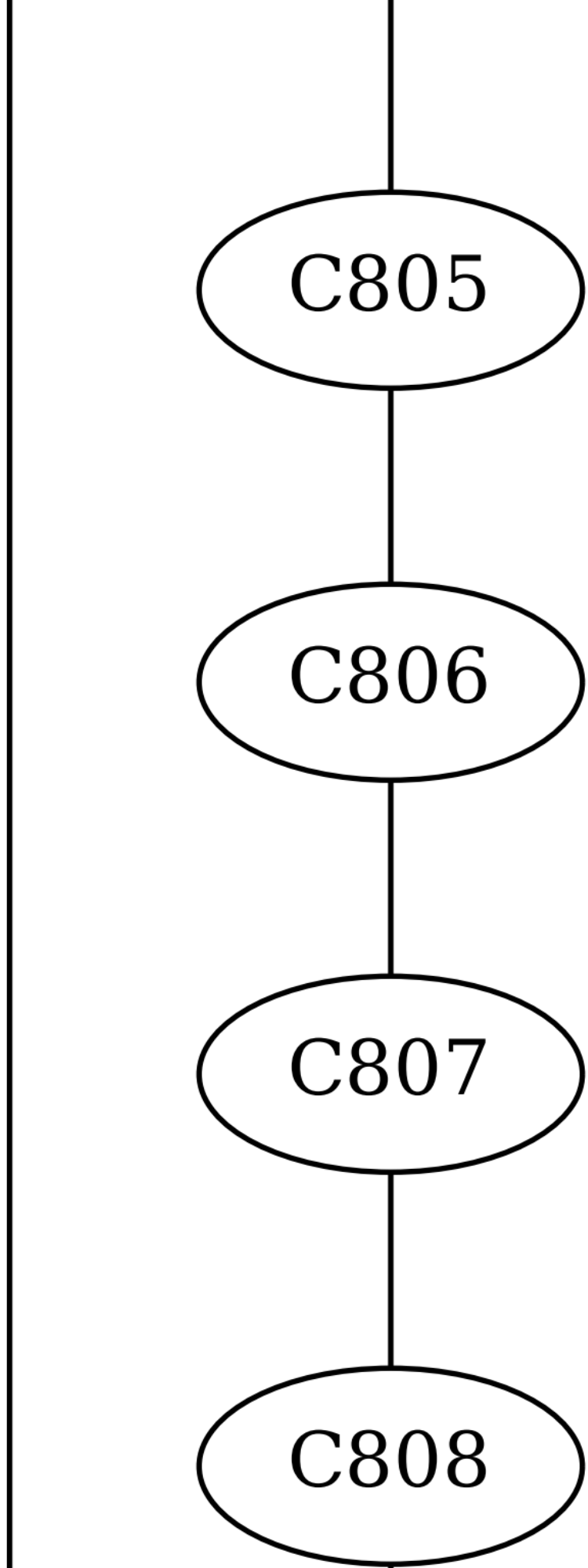
C805
C806
C807
C808

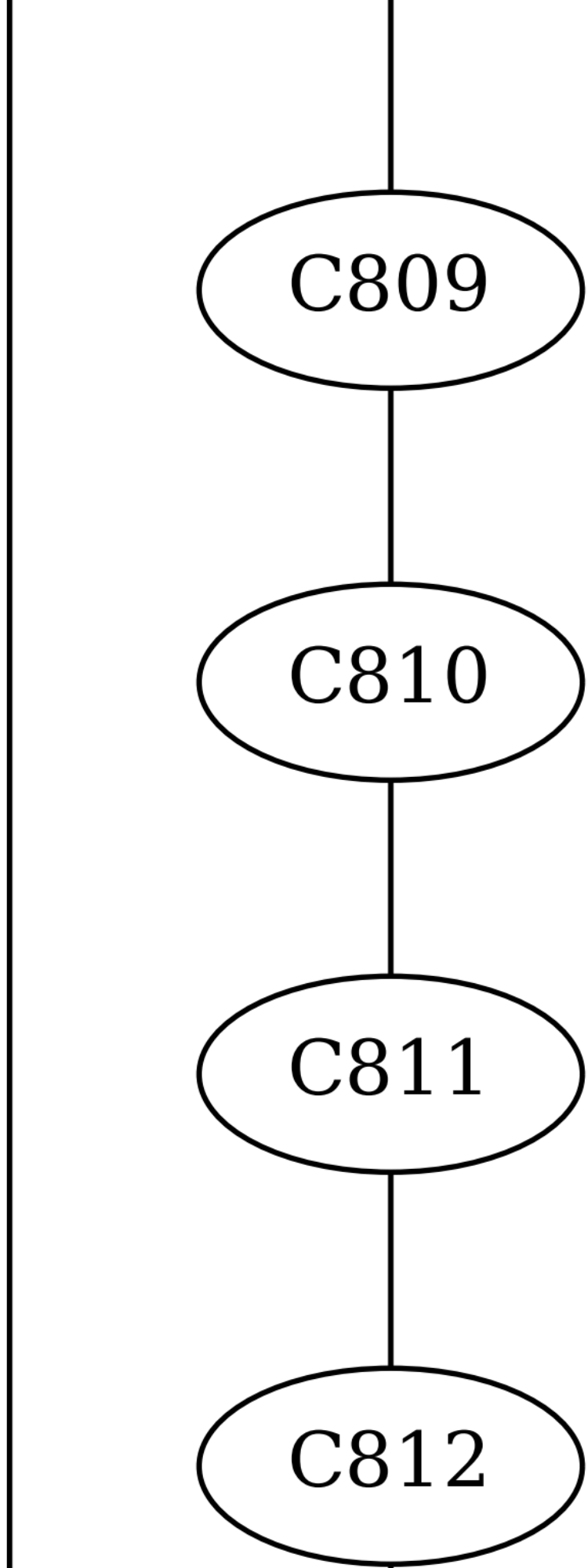
C809
C810
C811
C812

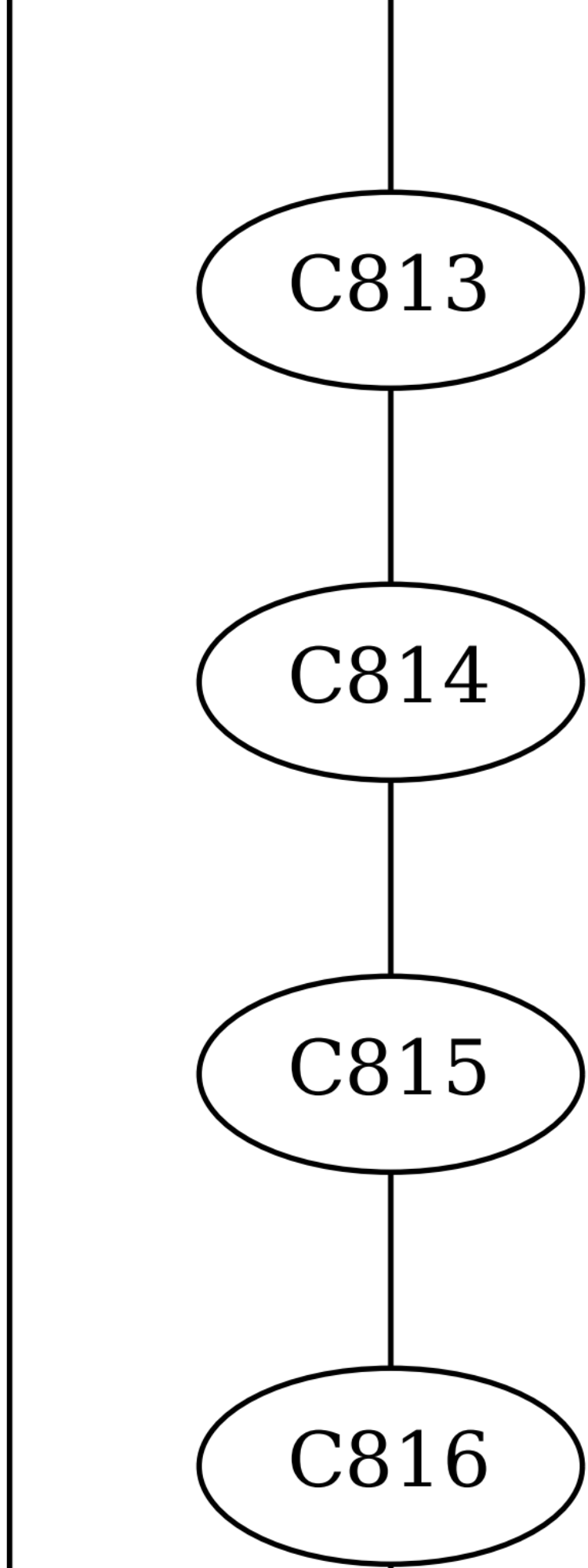
C813
C814
C815
C816

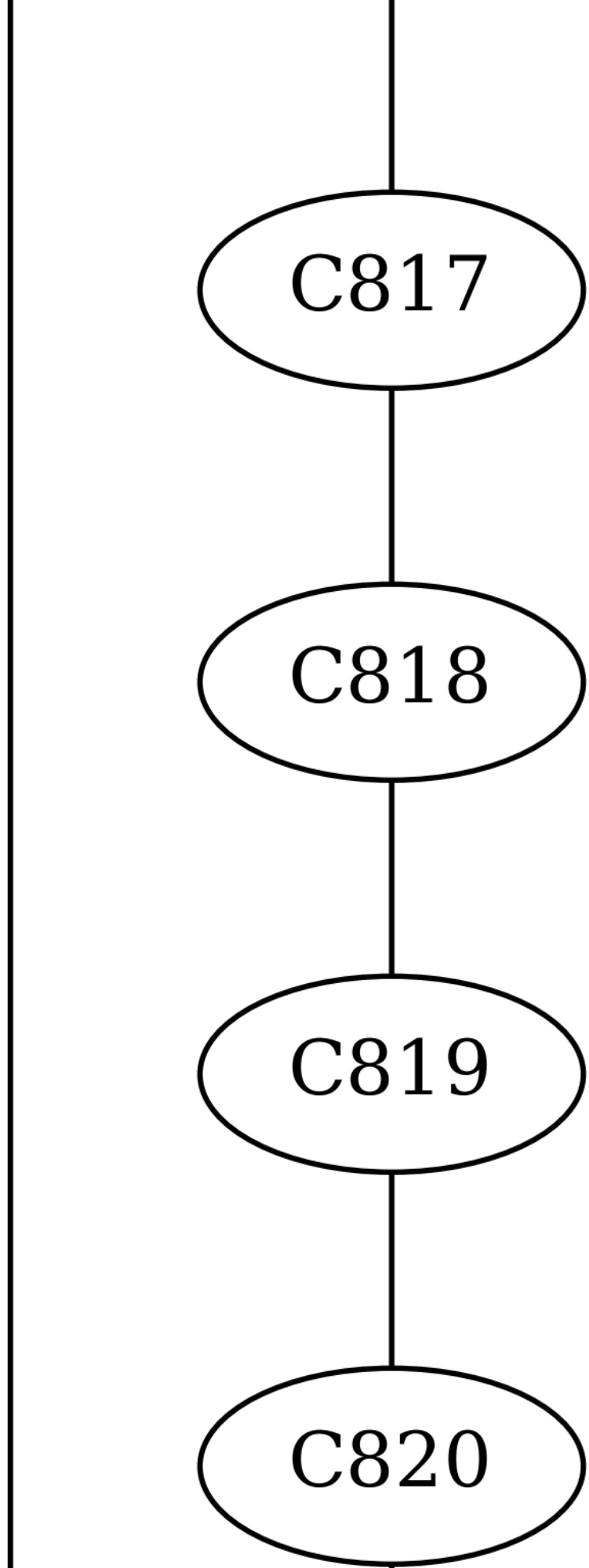
C817
C818
C819
C820

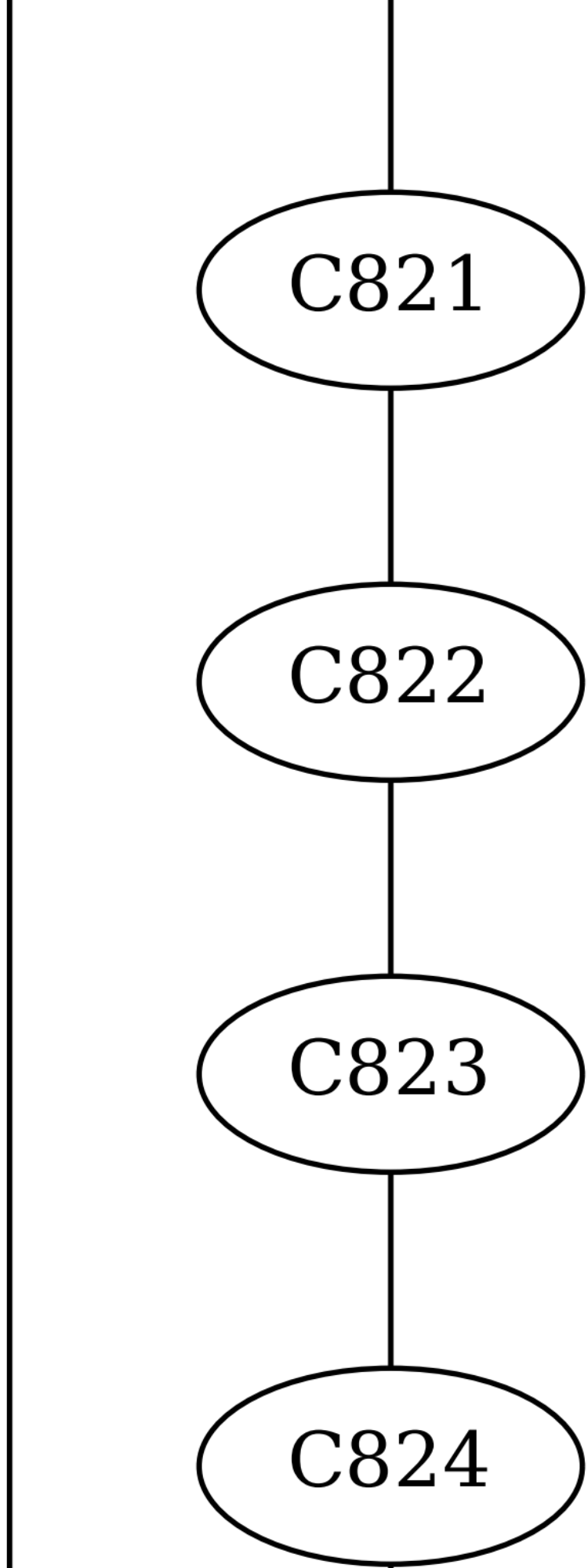
C821
C822
C823
C824

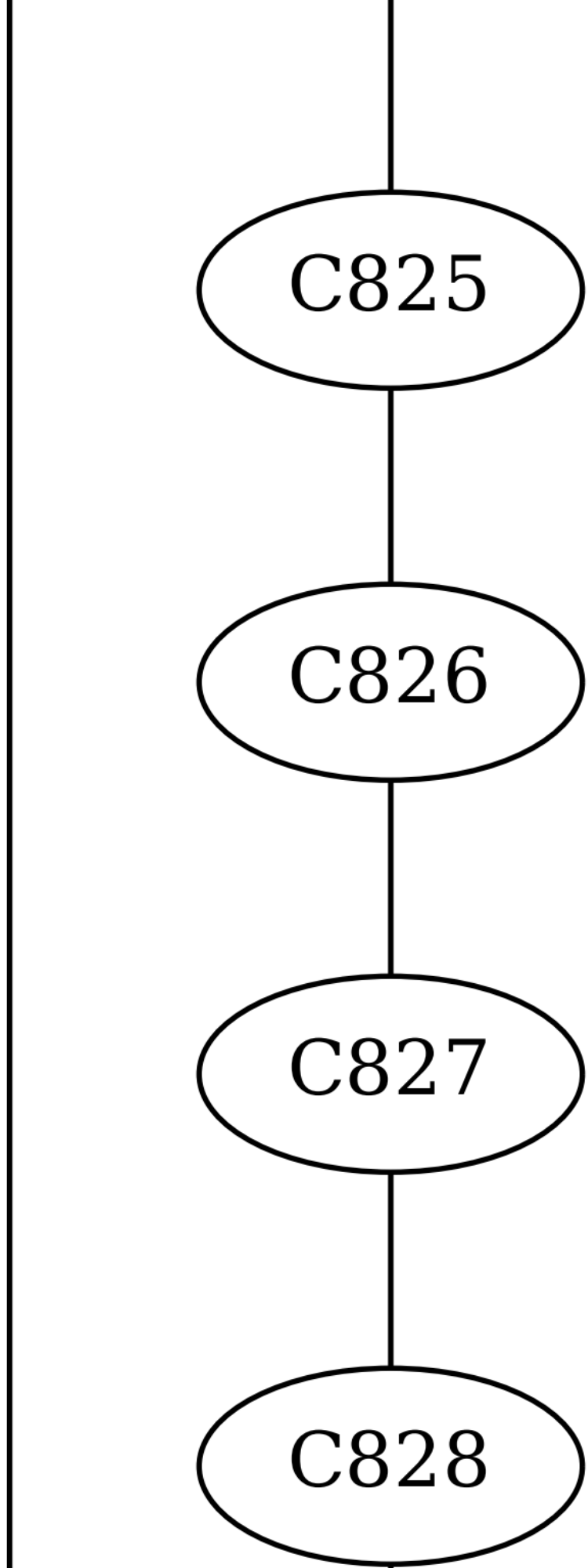
C825
C826
C827
C828

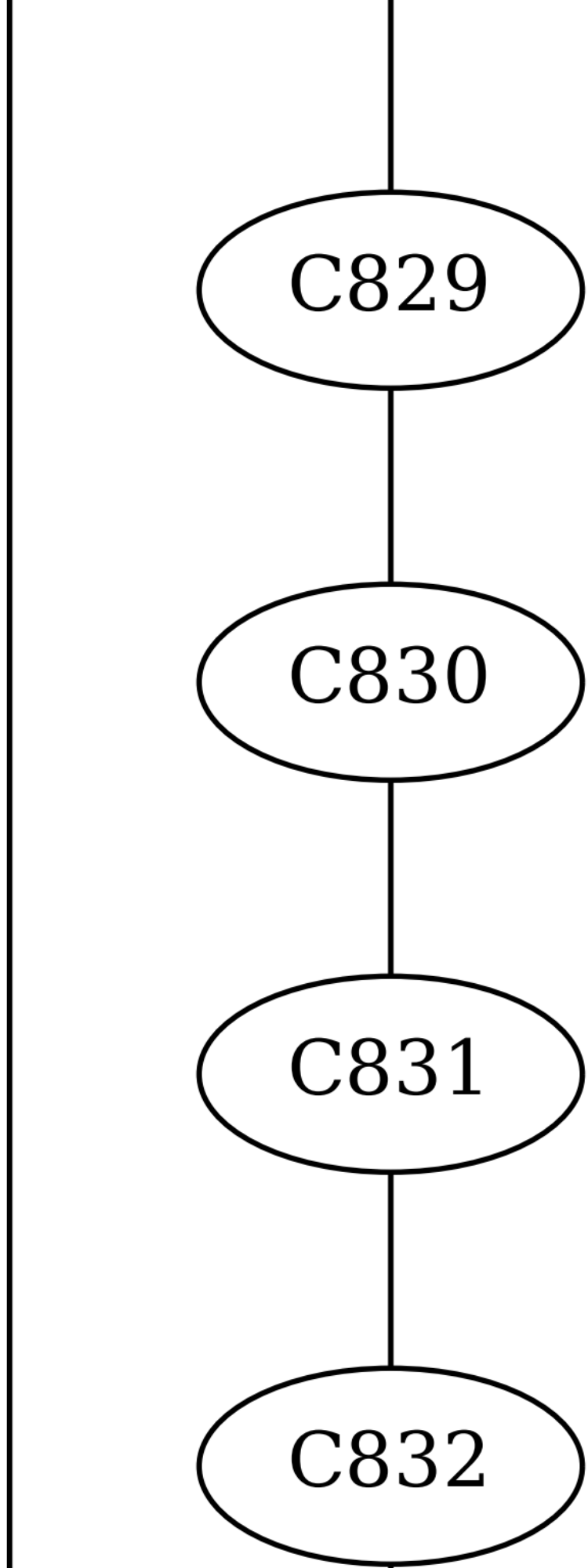
C829
C830
C831
C832

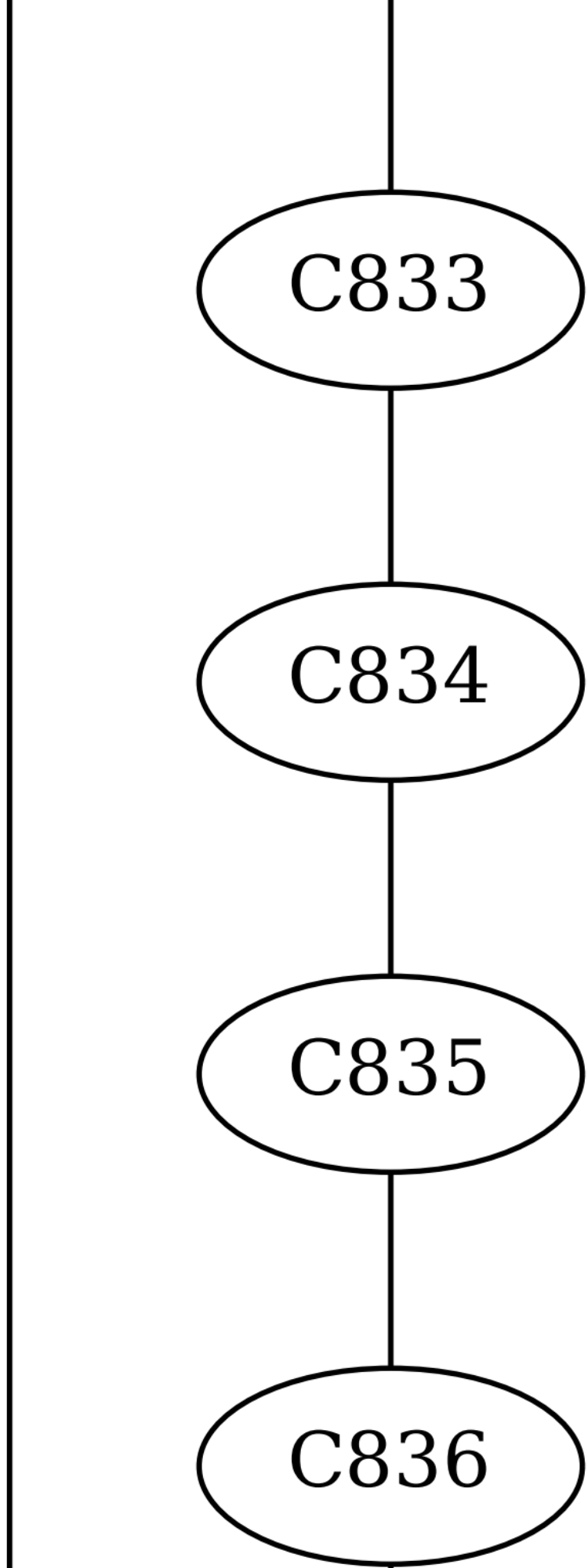
C833
C834
C835
C836

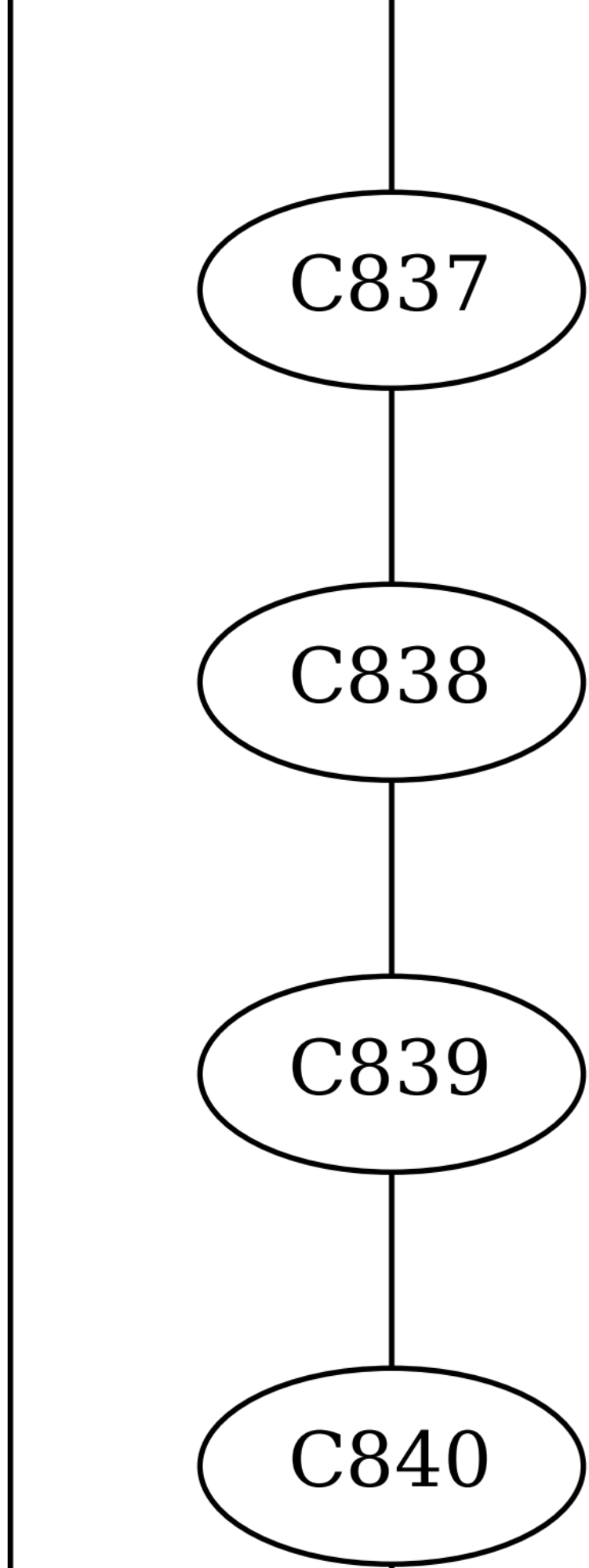
C837
C838
C839
C840

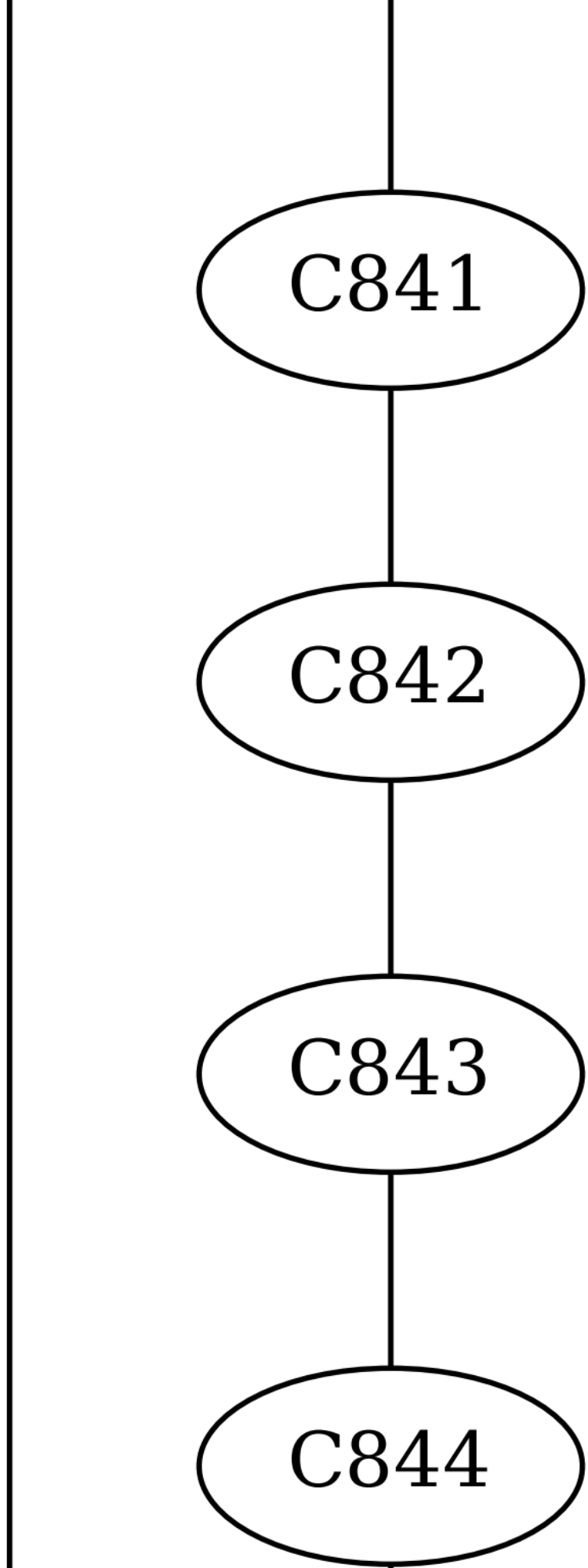
C841
C842
C843
C844

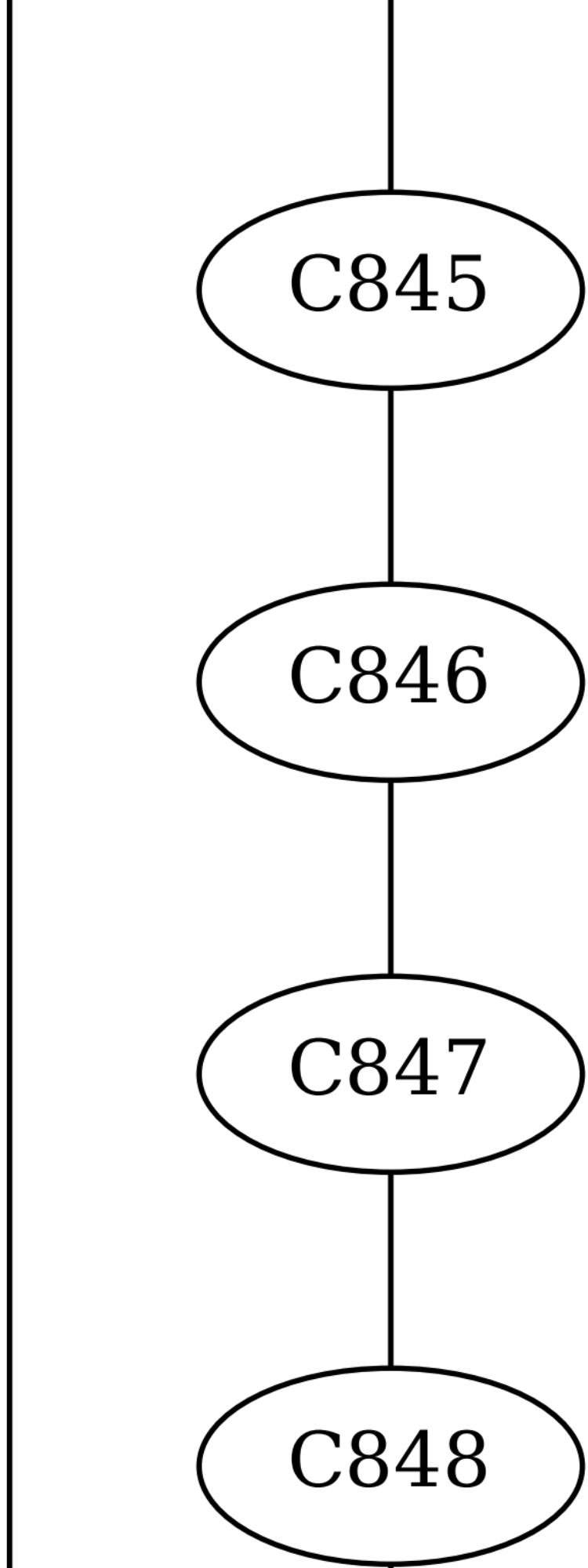
C845
C846
C847
C848

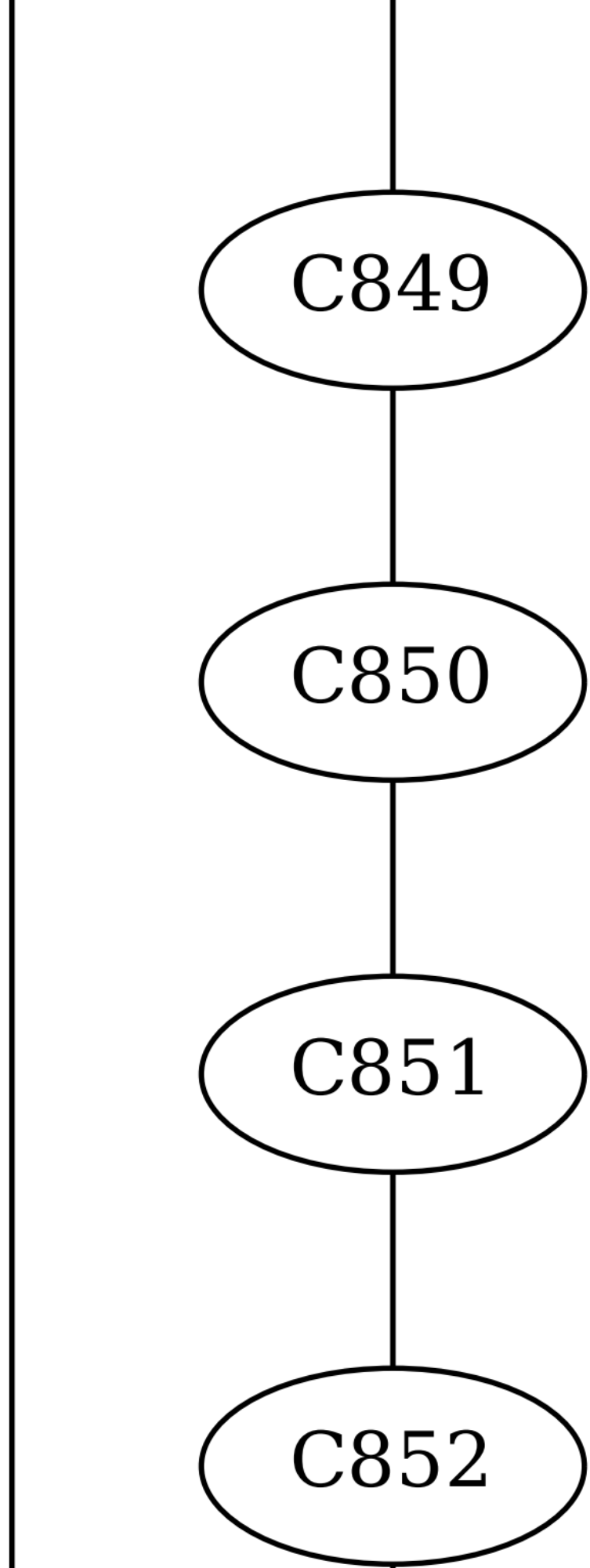
C849
C850
C851
C852

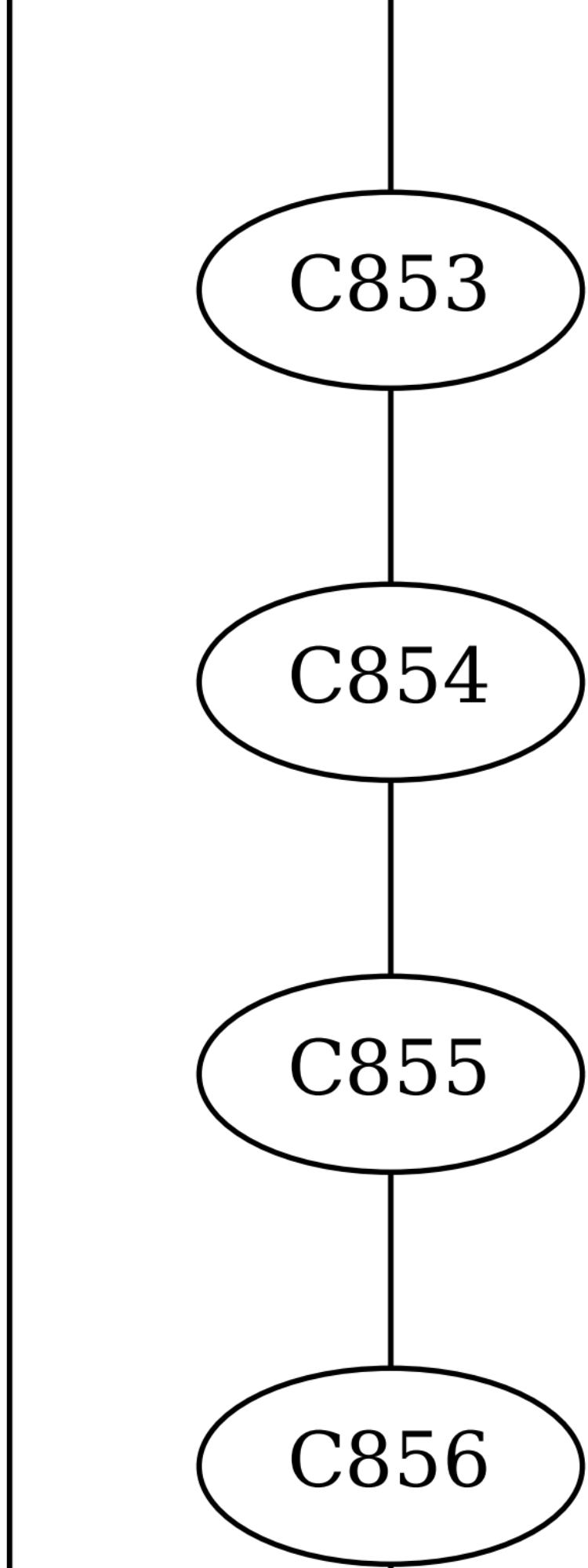
C853
C854
C855
C856

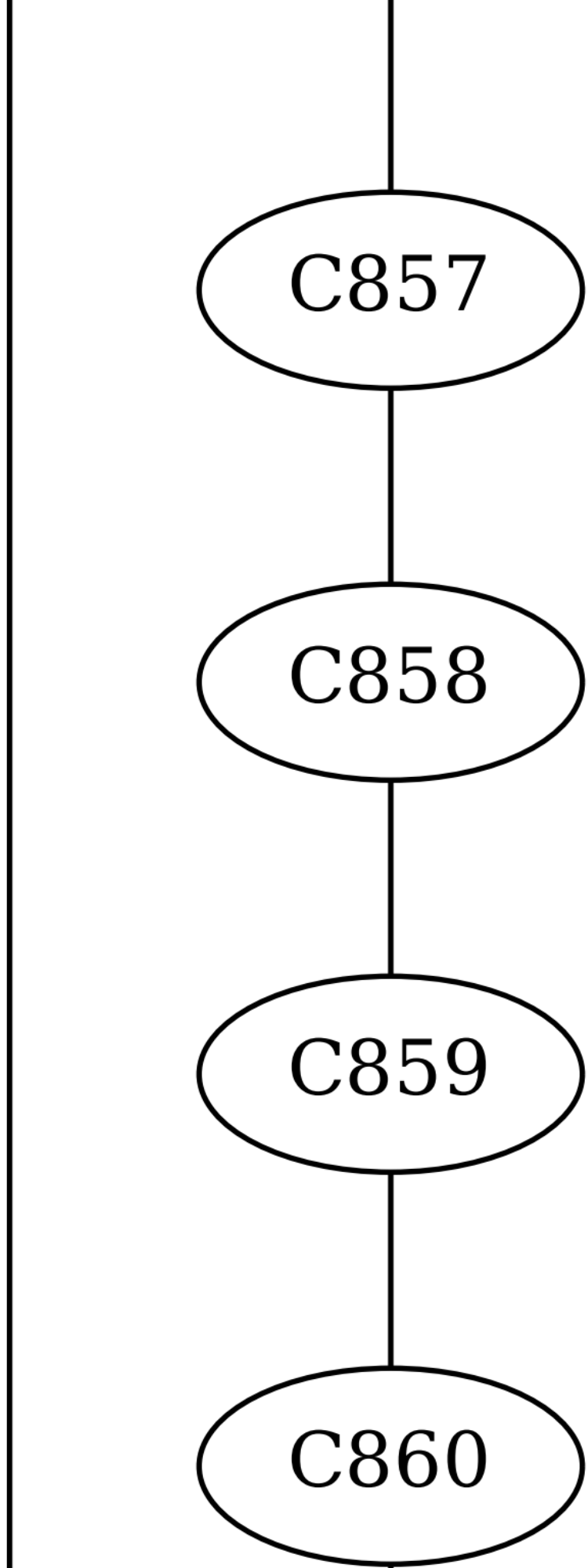
C857
C858
C859
C860

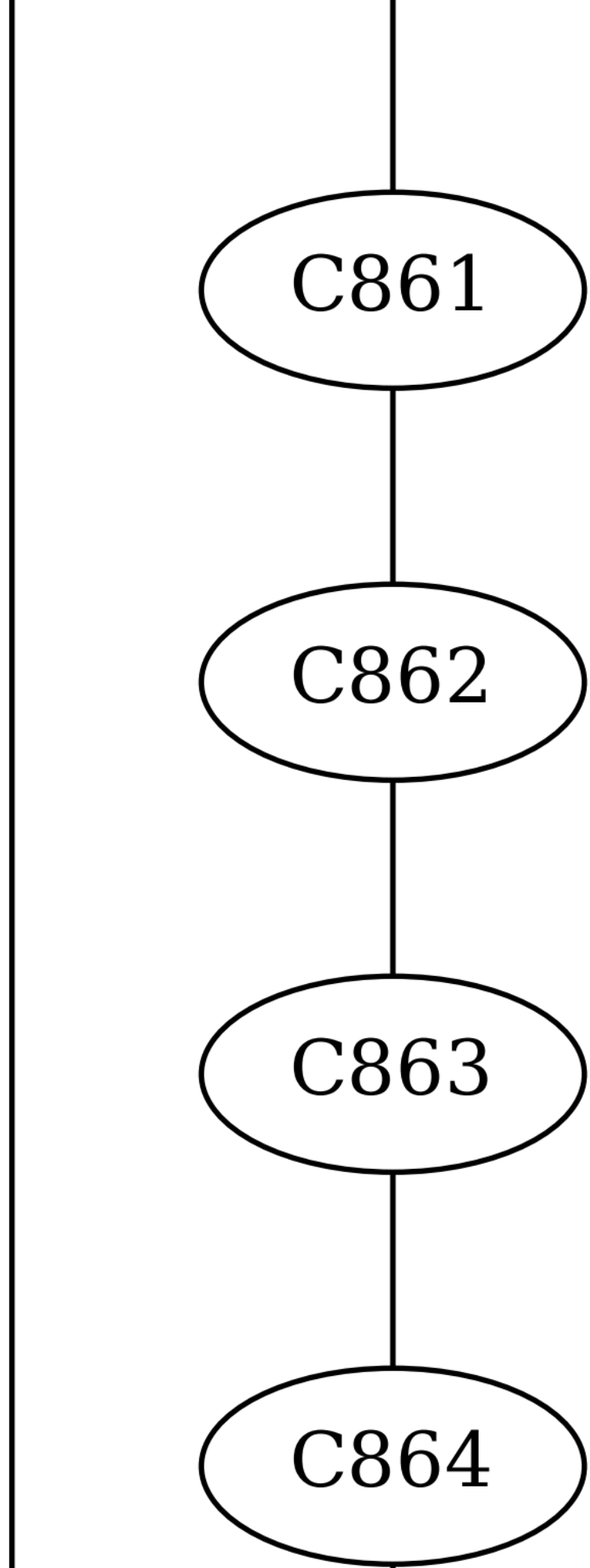
C861
C862
C863
C864

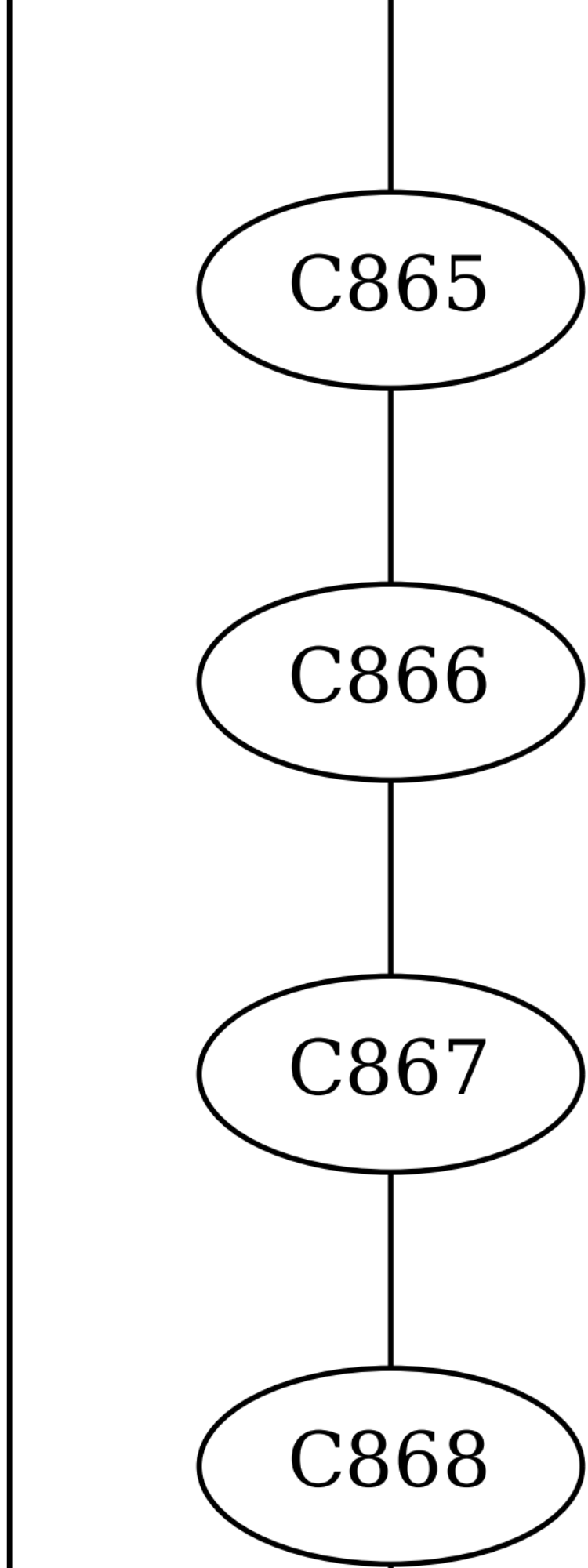
C865
C866
C867
C868

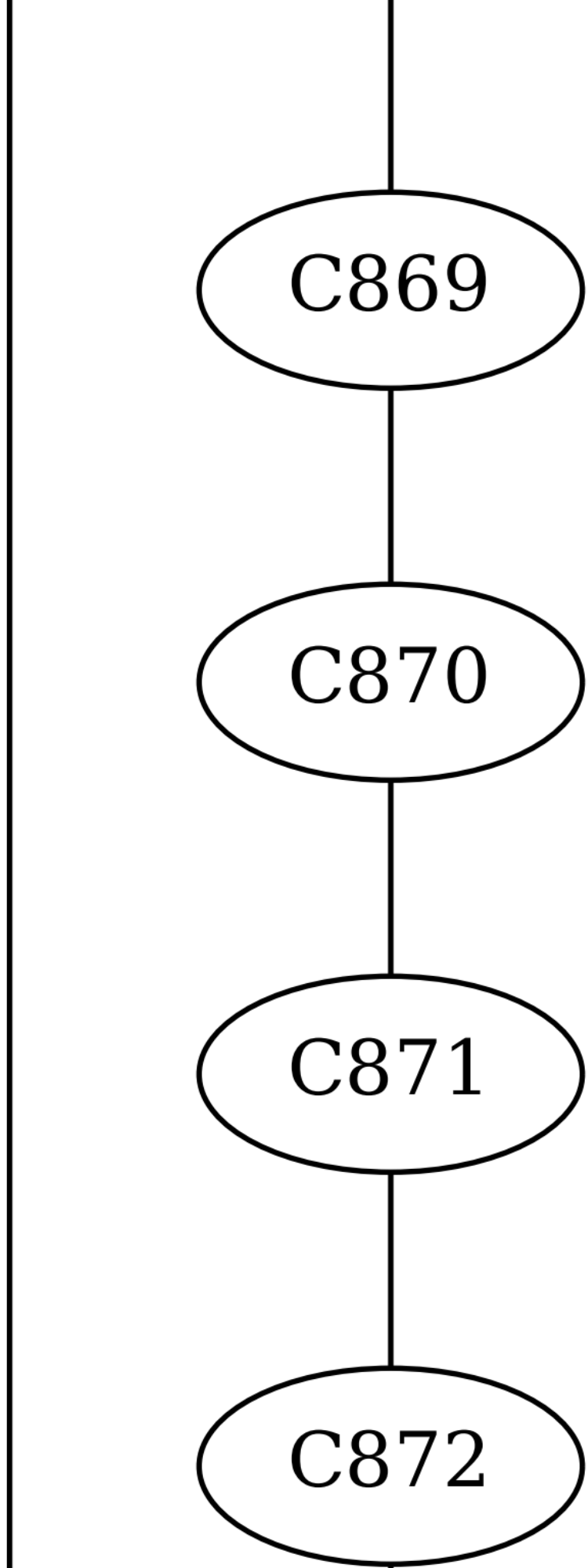
C869
C870
C871
C872

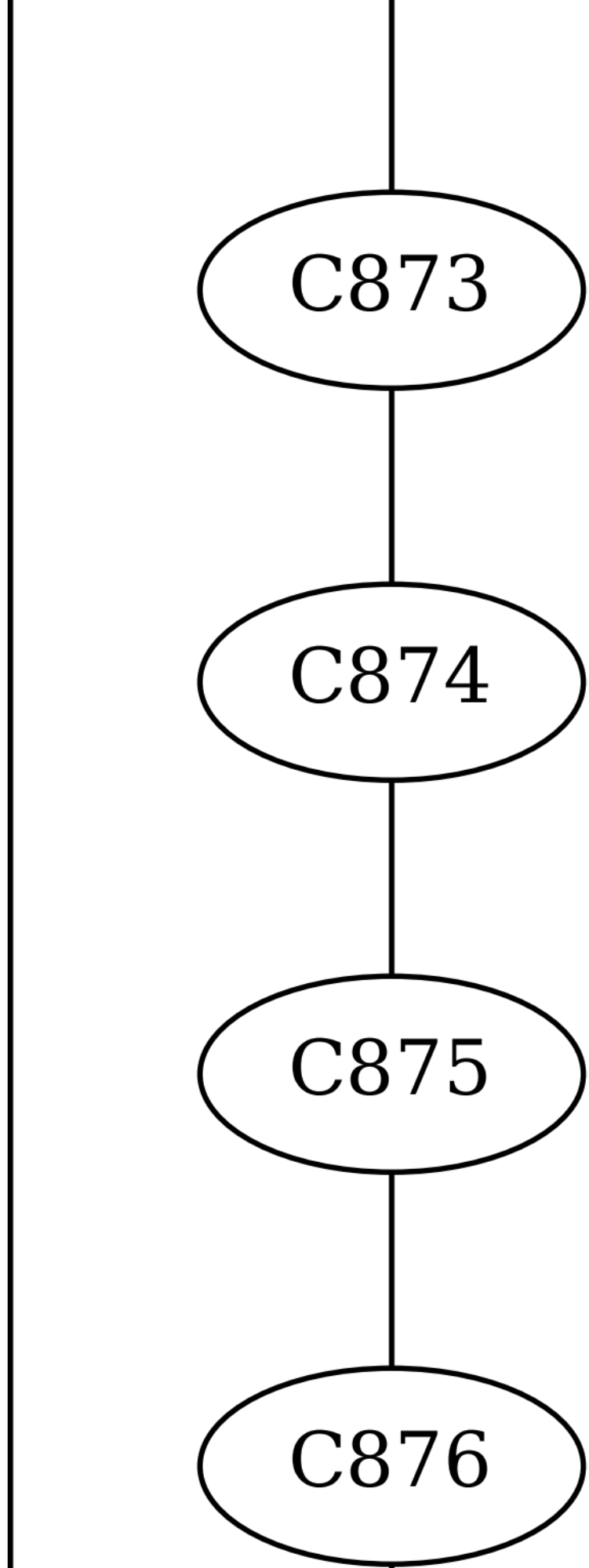
C873
C874
C875
C876

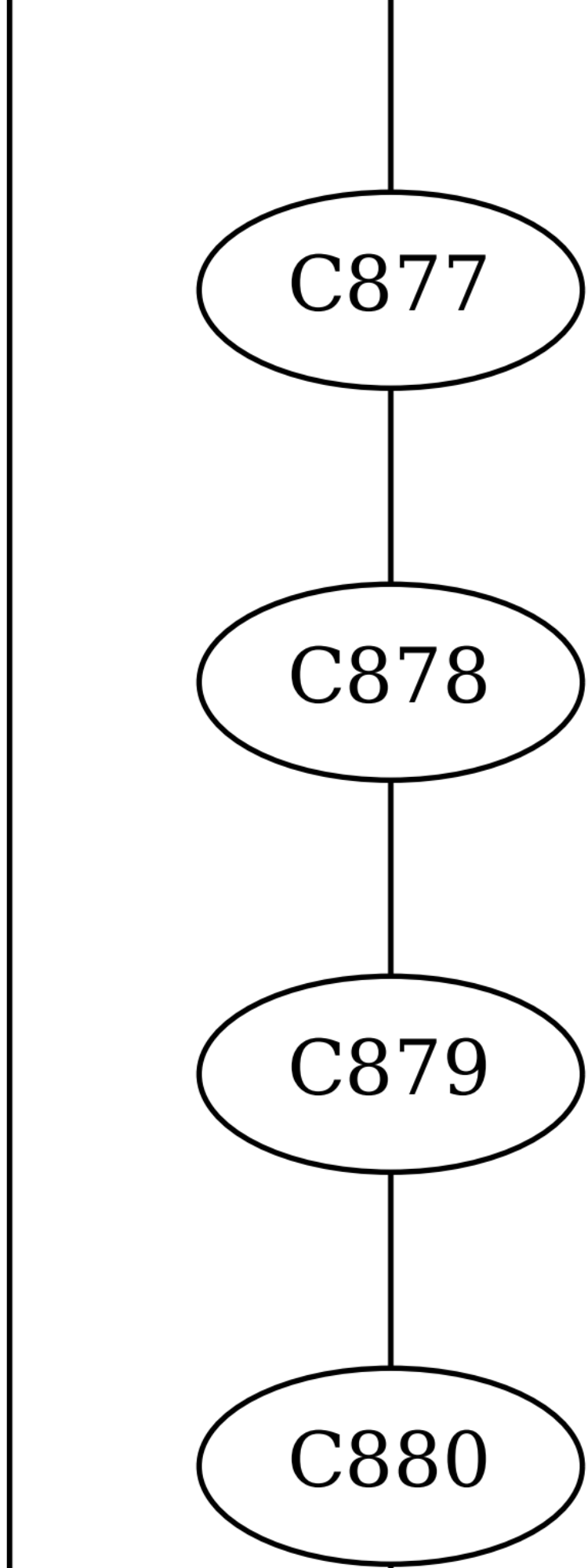
C877
C878
C879
C880

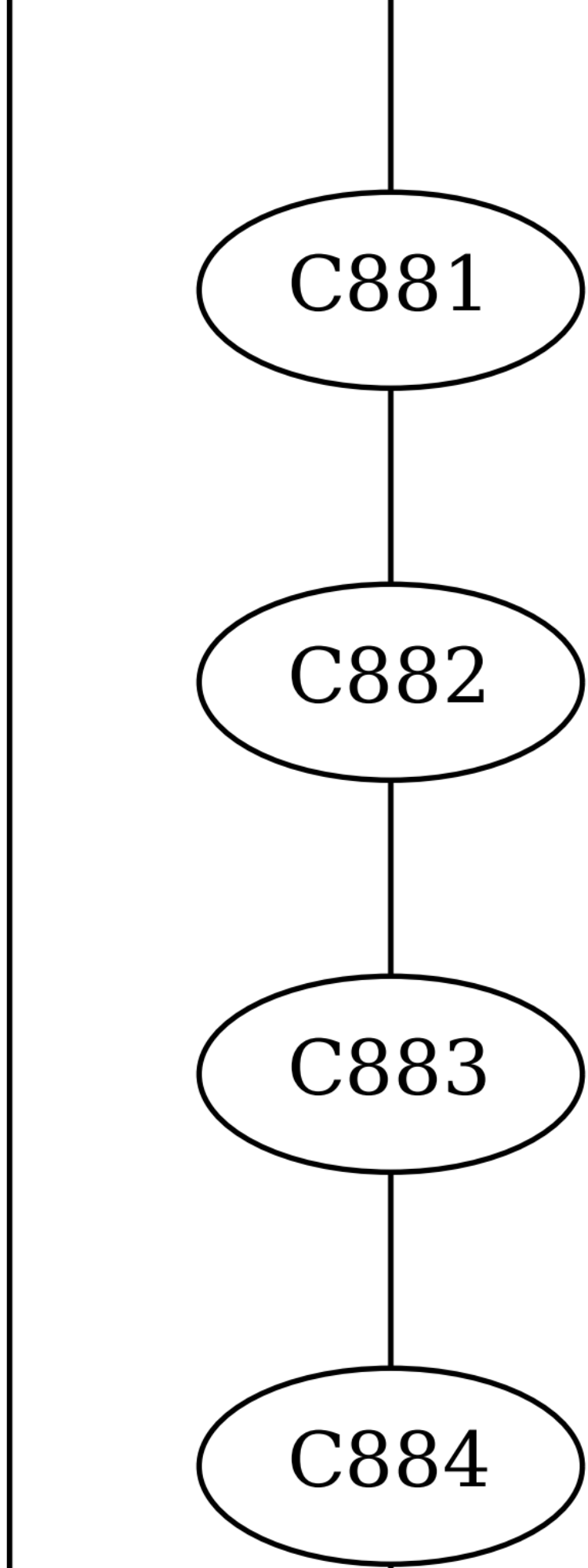
C881
C882
C883
C884

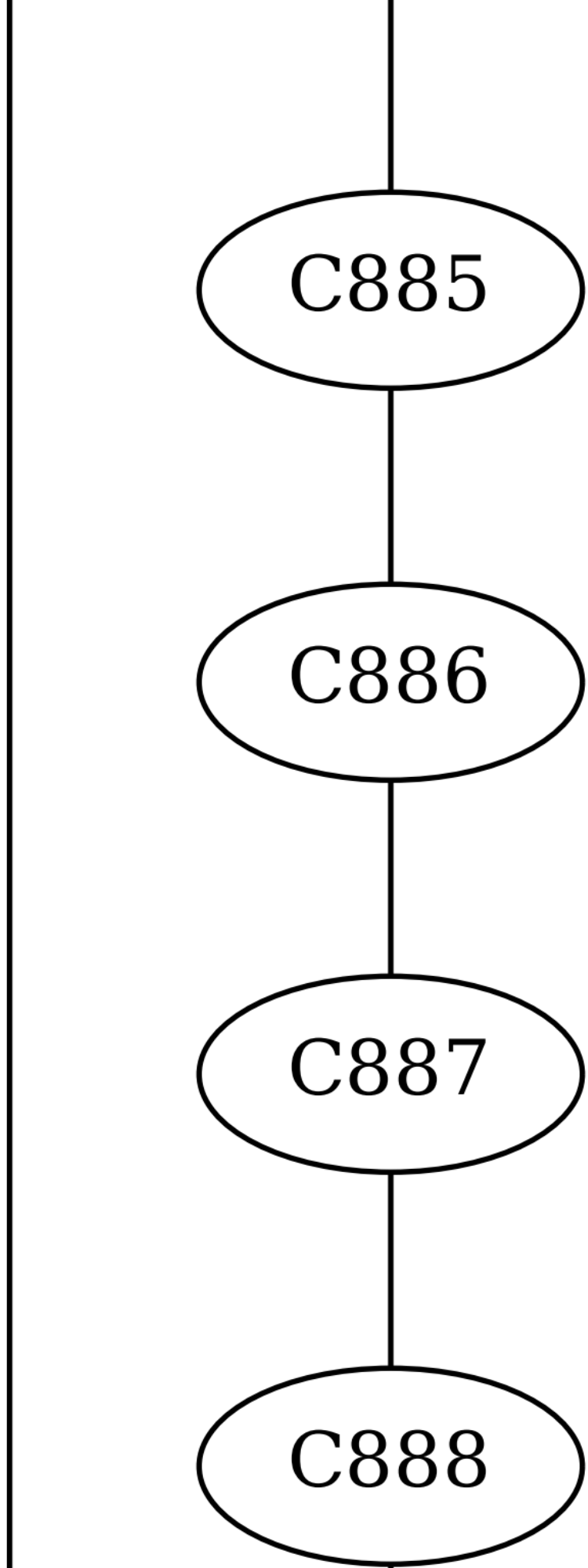
C885
C886
C887
C888

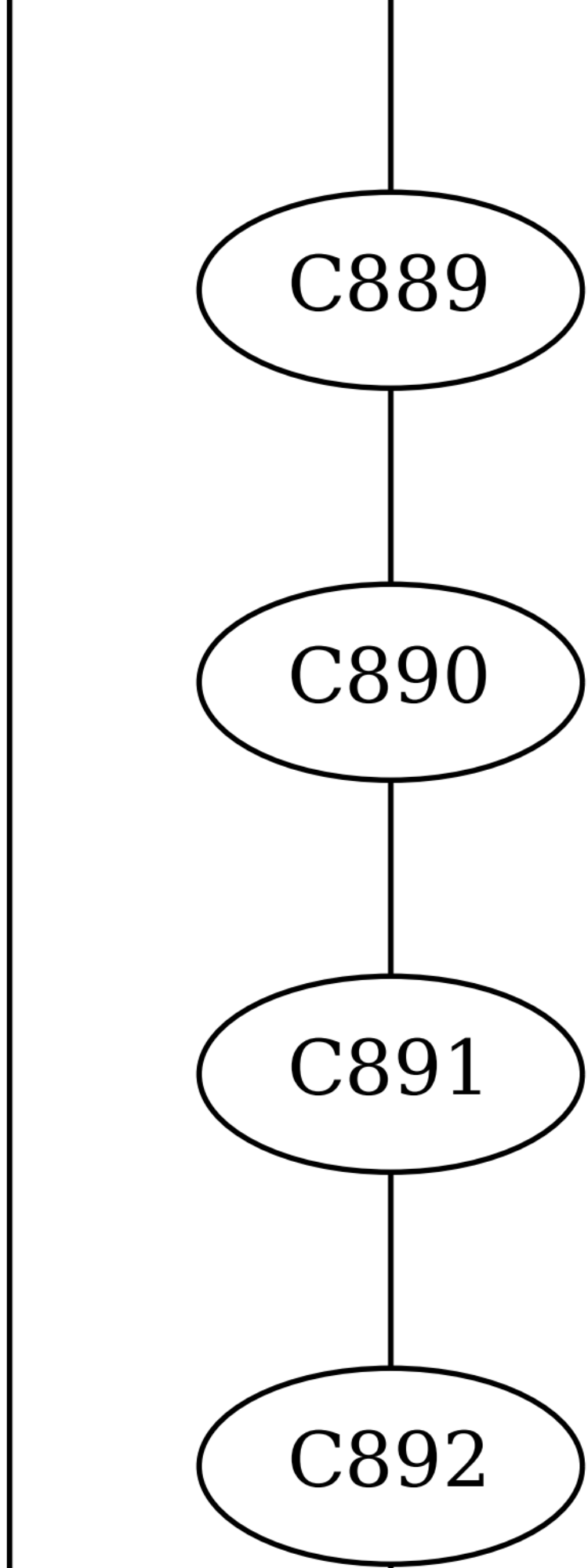
C889
C890
C891
C892

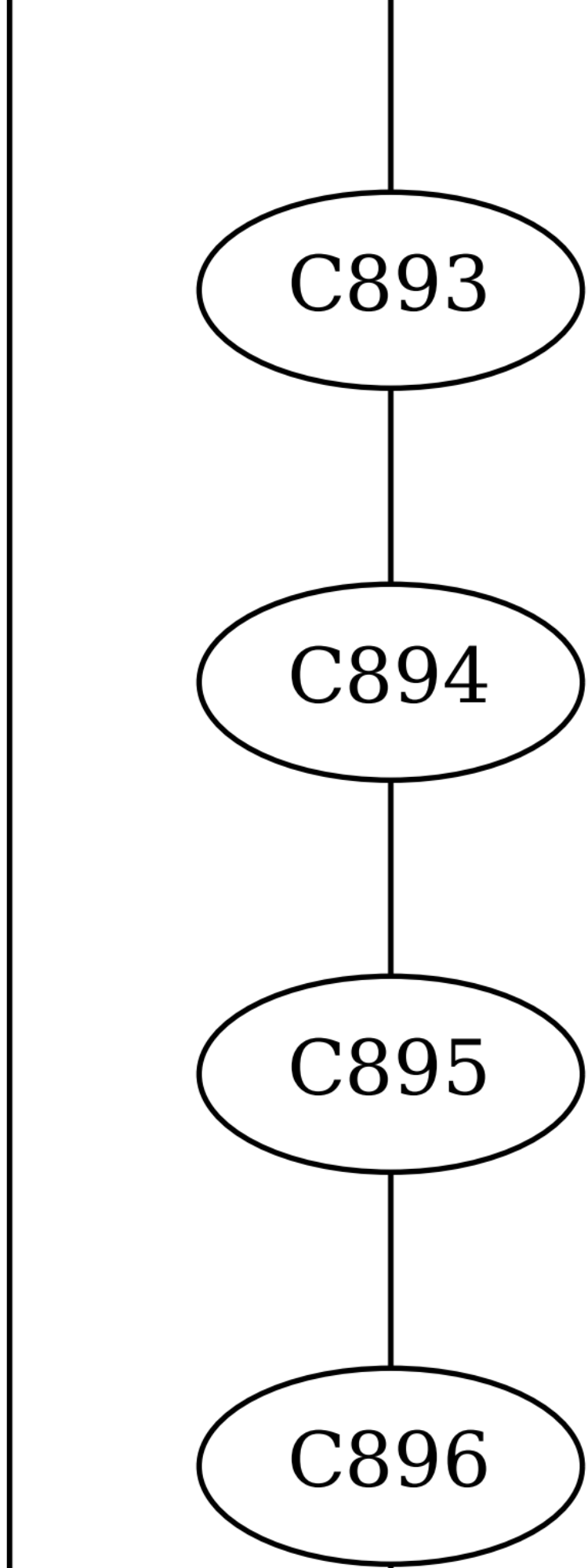
C893
C894
C895
C896

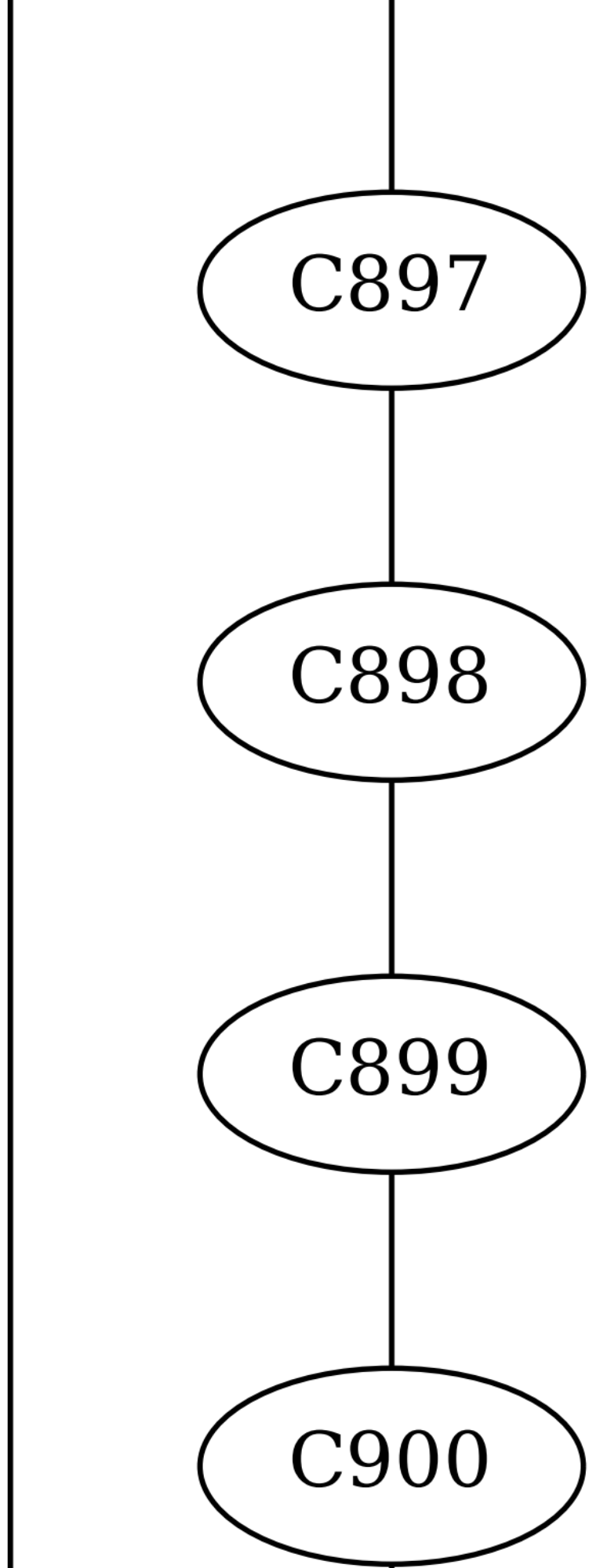
C897
C898
C899
C900

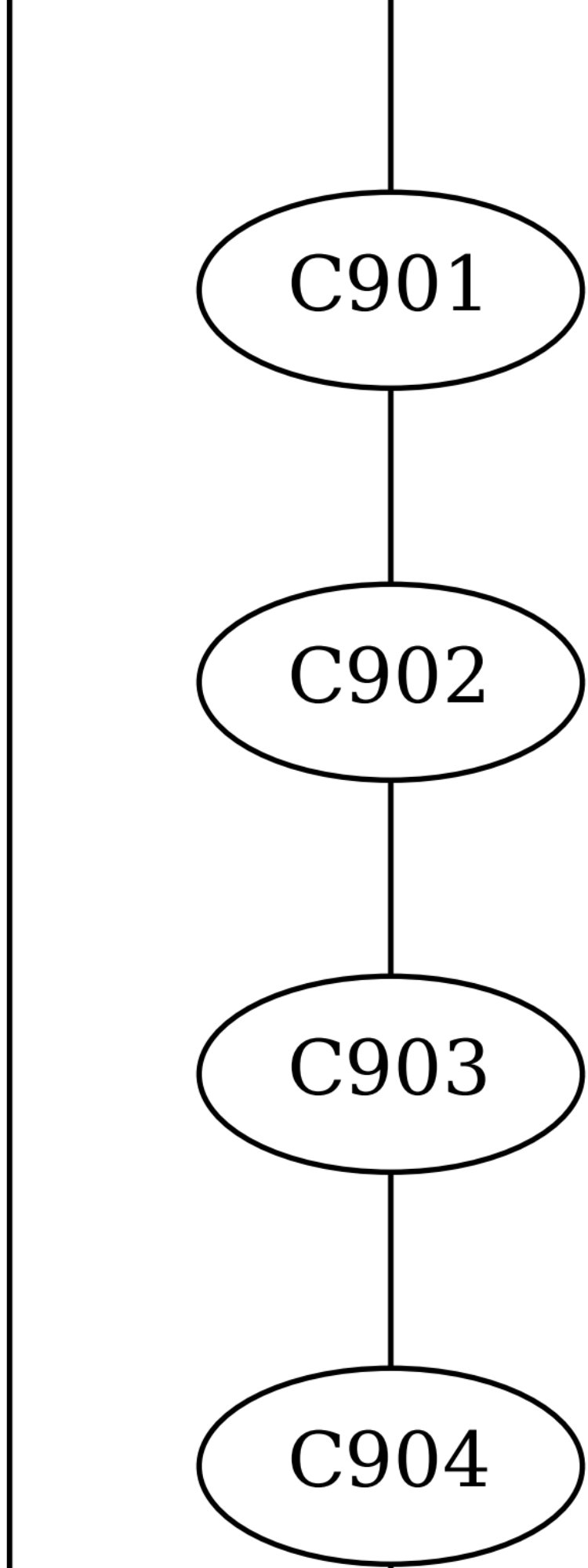
C901
C902
C903
C904

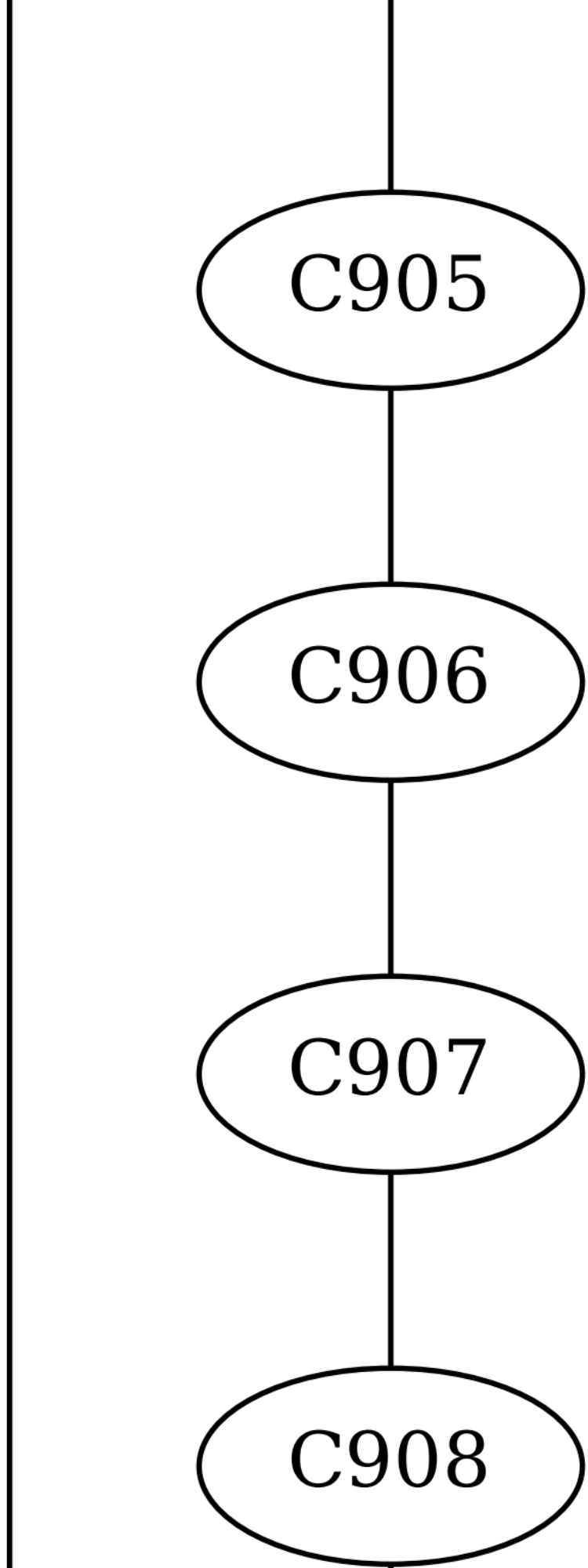
C905
C906
C907
C908

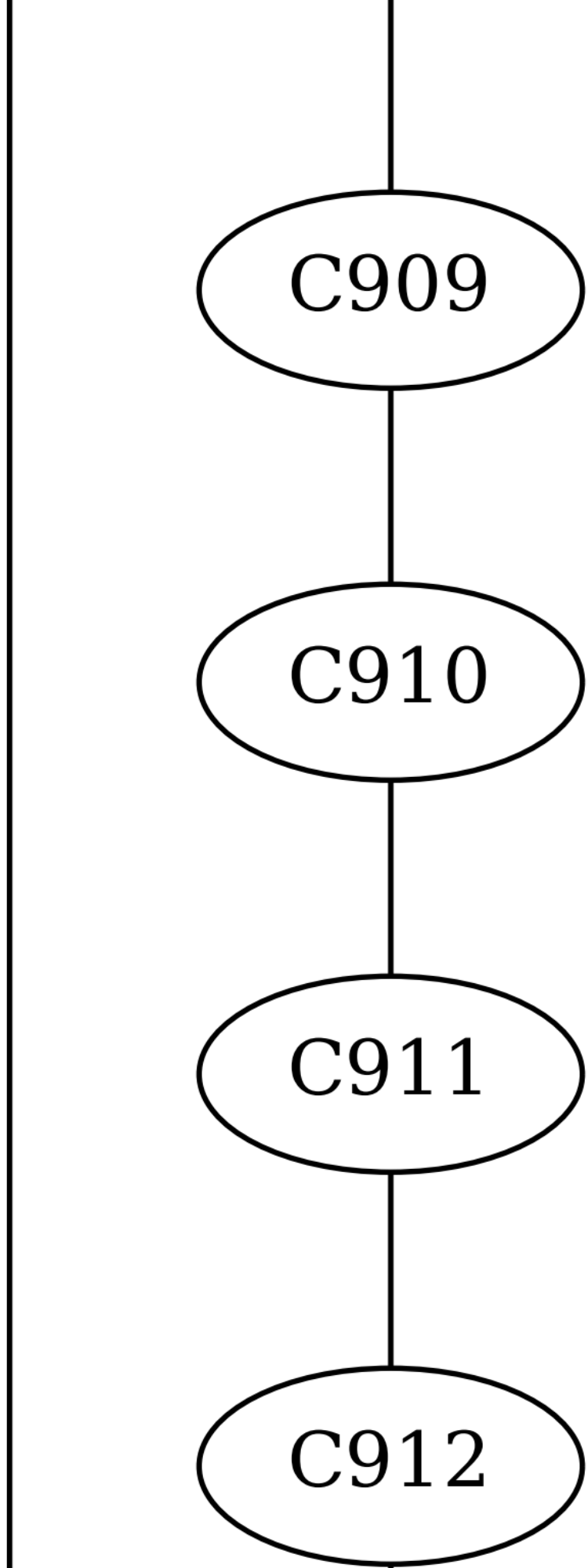
C909
C910
C911
C912

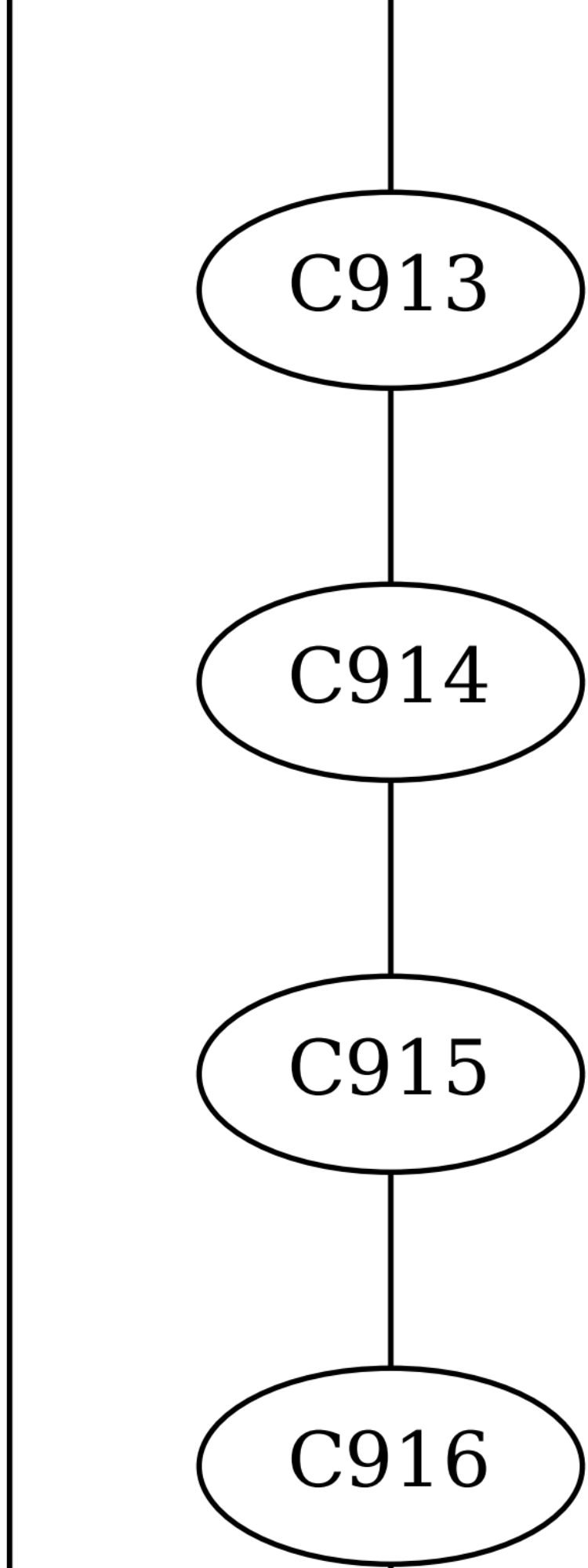
C913
C914
C915
C916

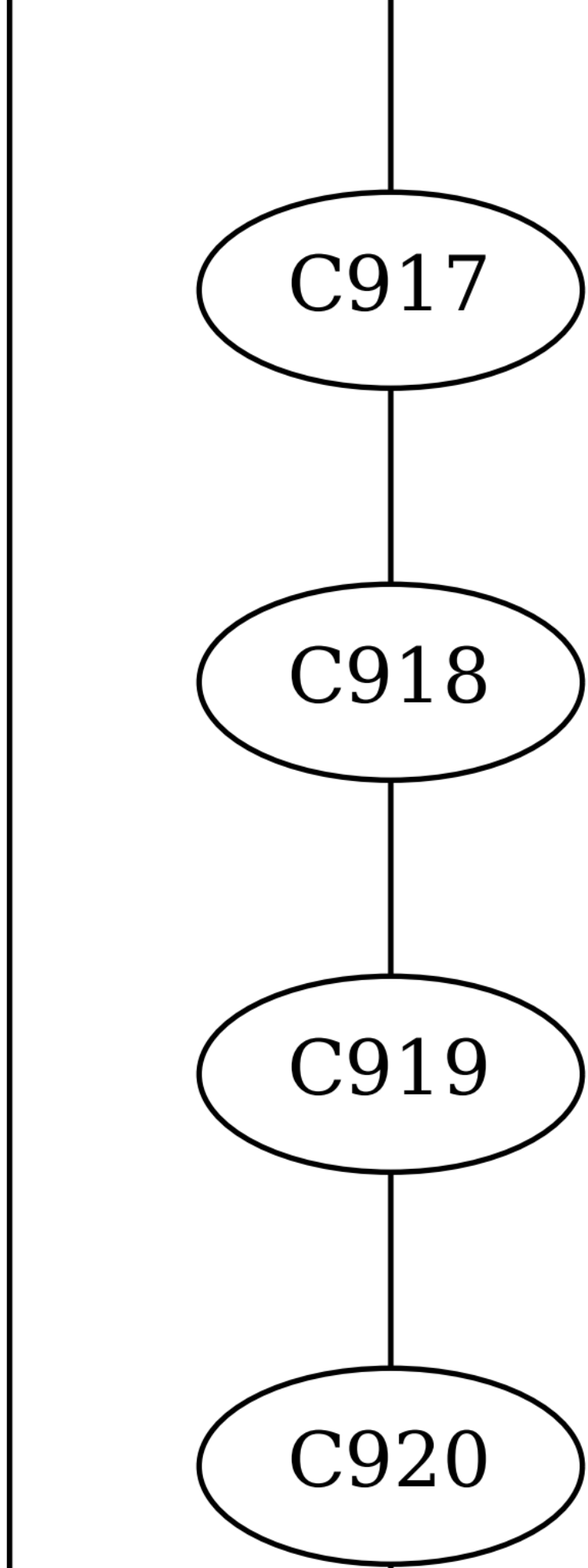
C917
C918
C919
C920

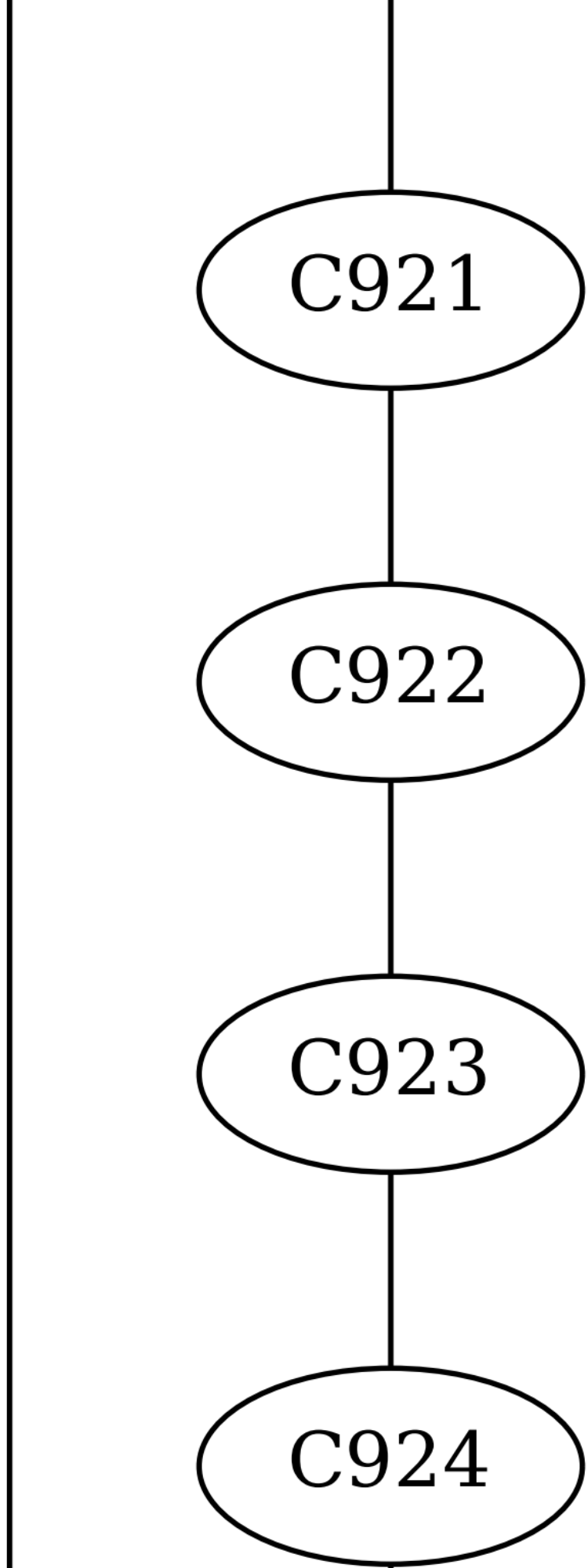
C921
C922
C923
C924

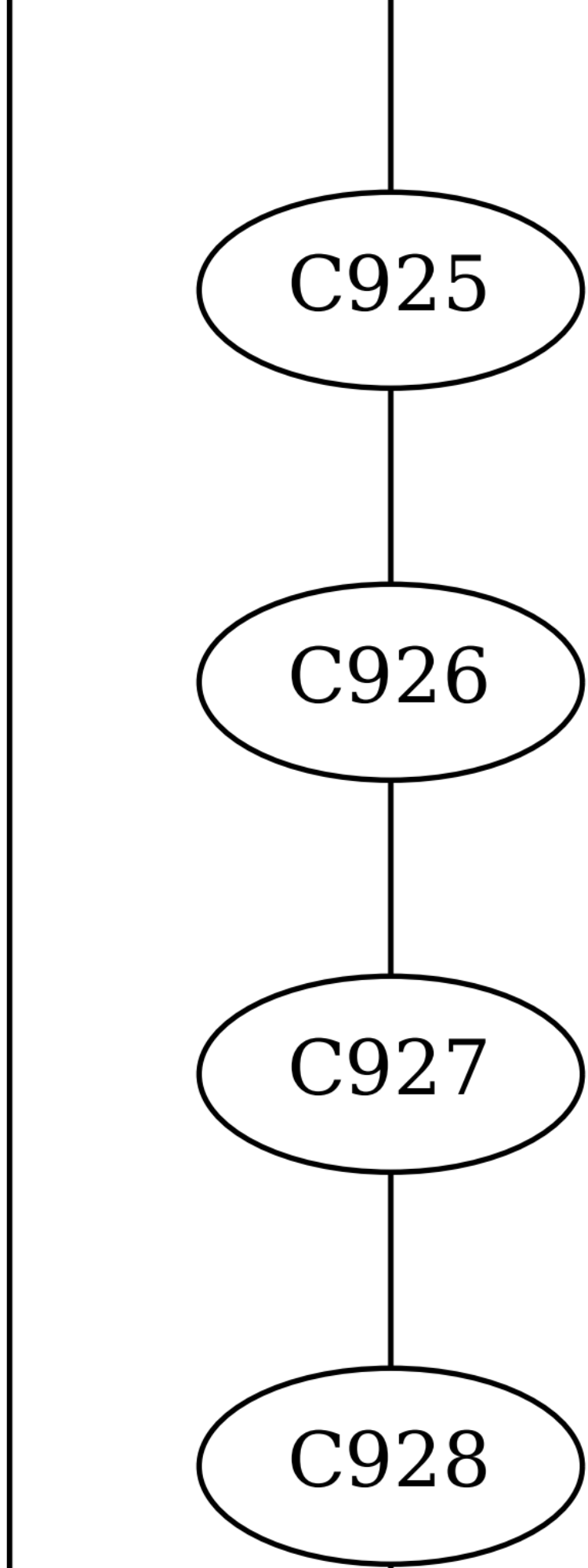
C925
C926
C927
C928

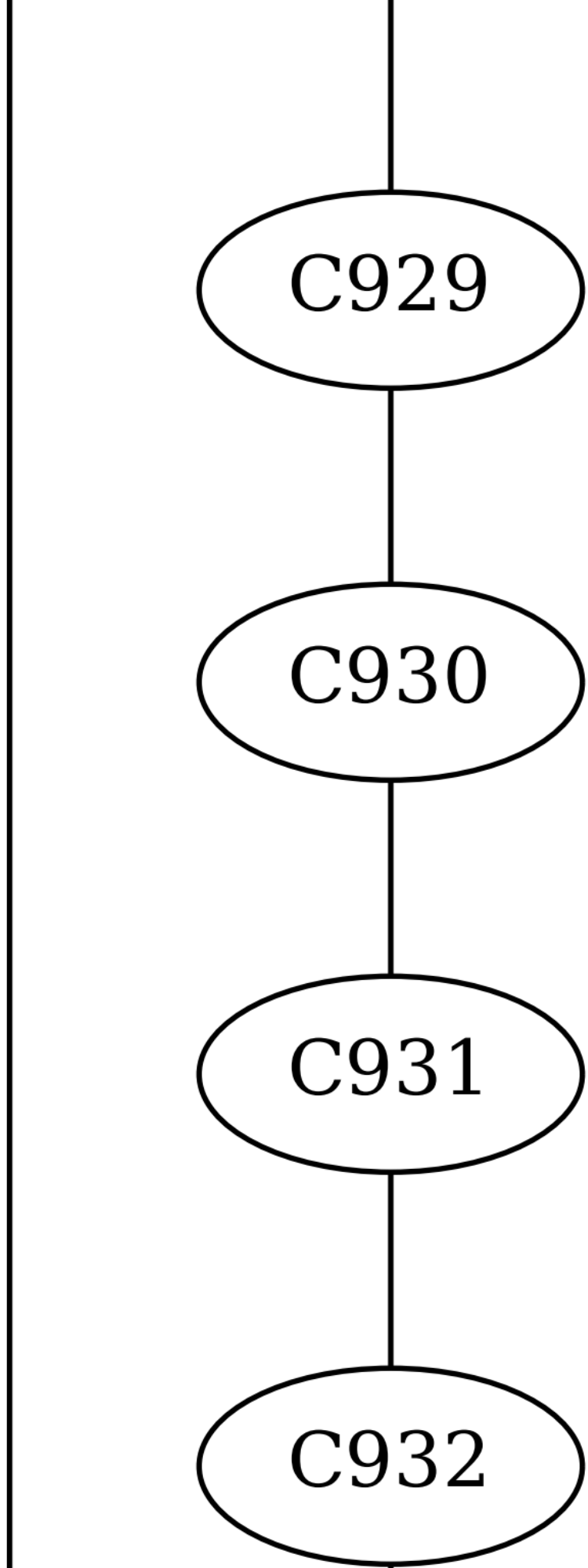
C929
C930
C931
C932

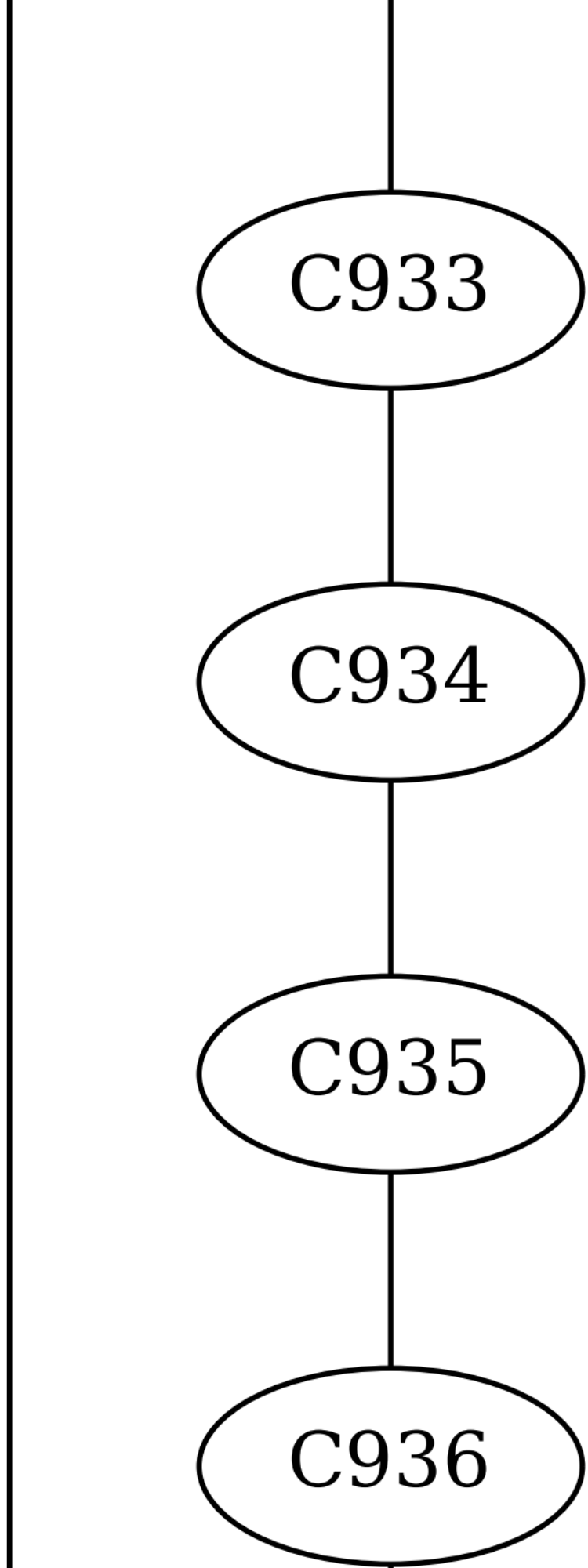
C933
C934
C935
C936

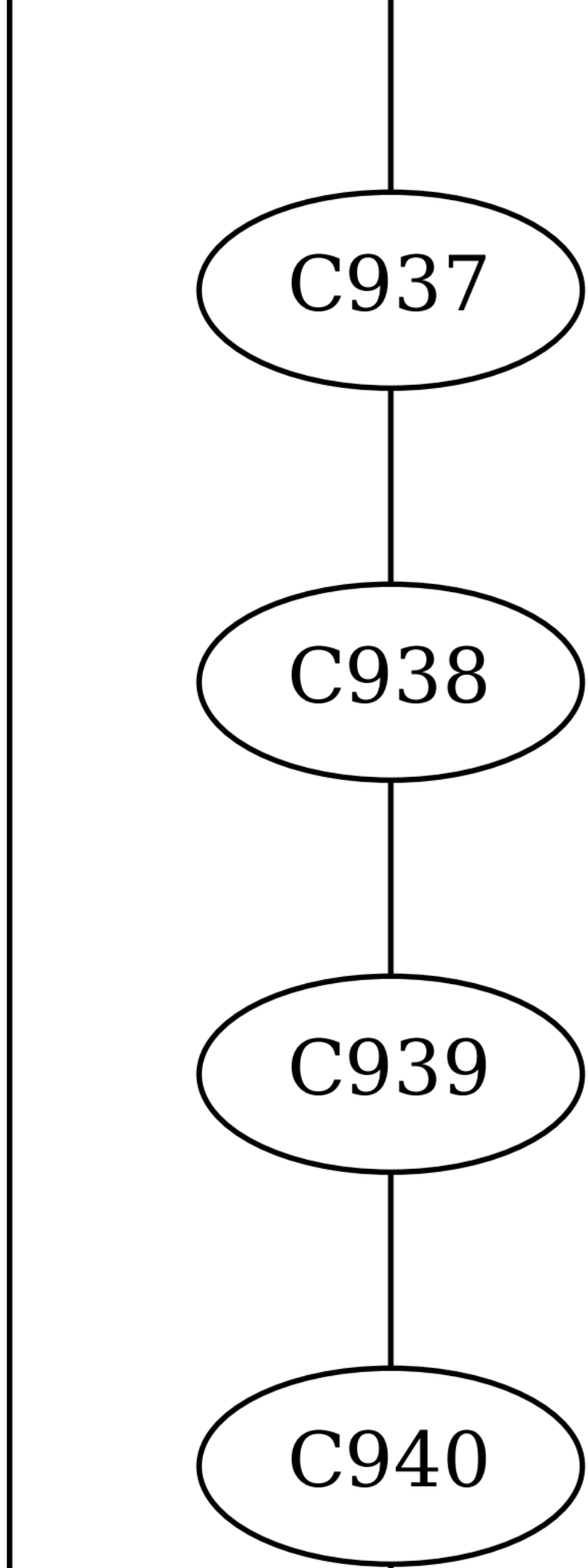
C937
C938
C939
C940

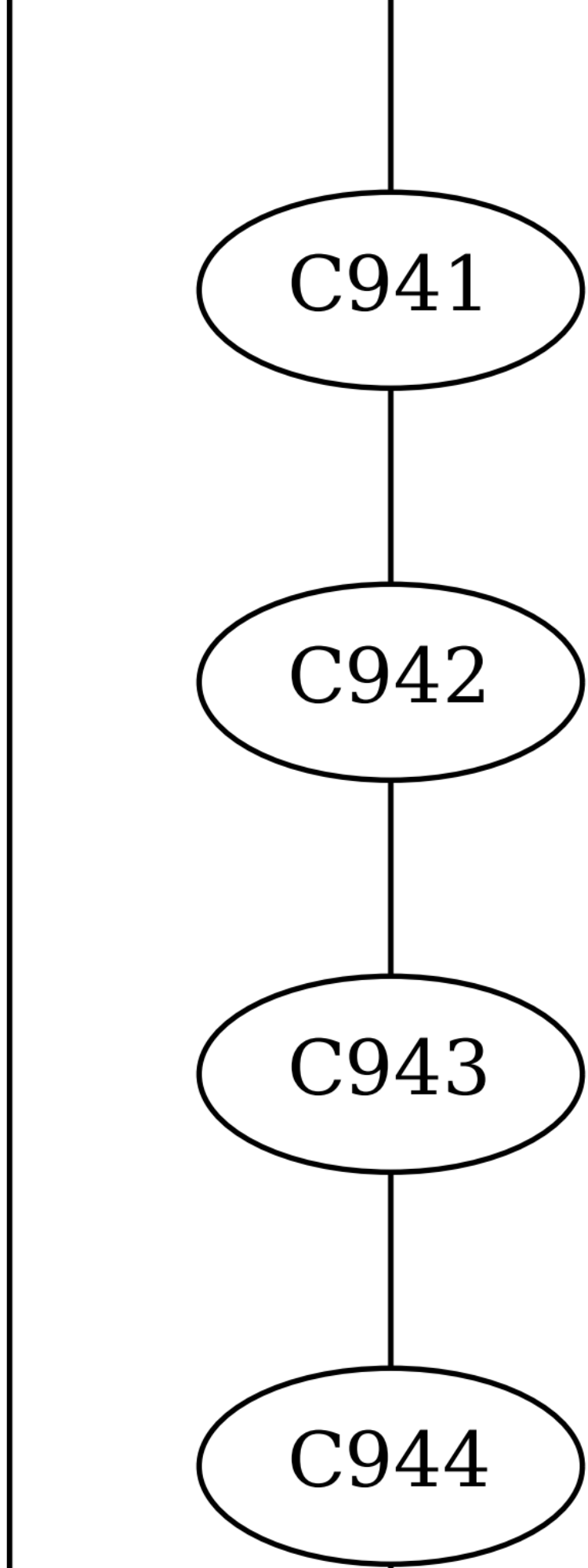
C941
C942
C943
C944

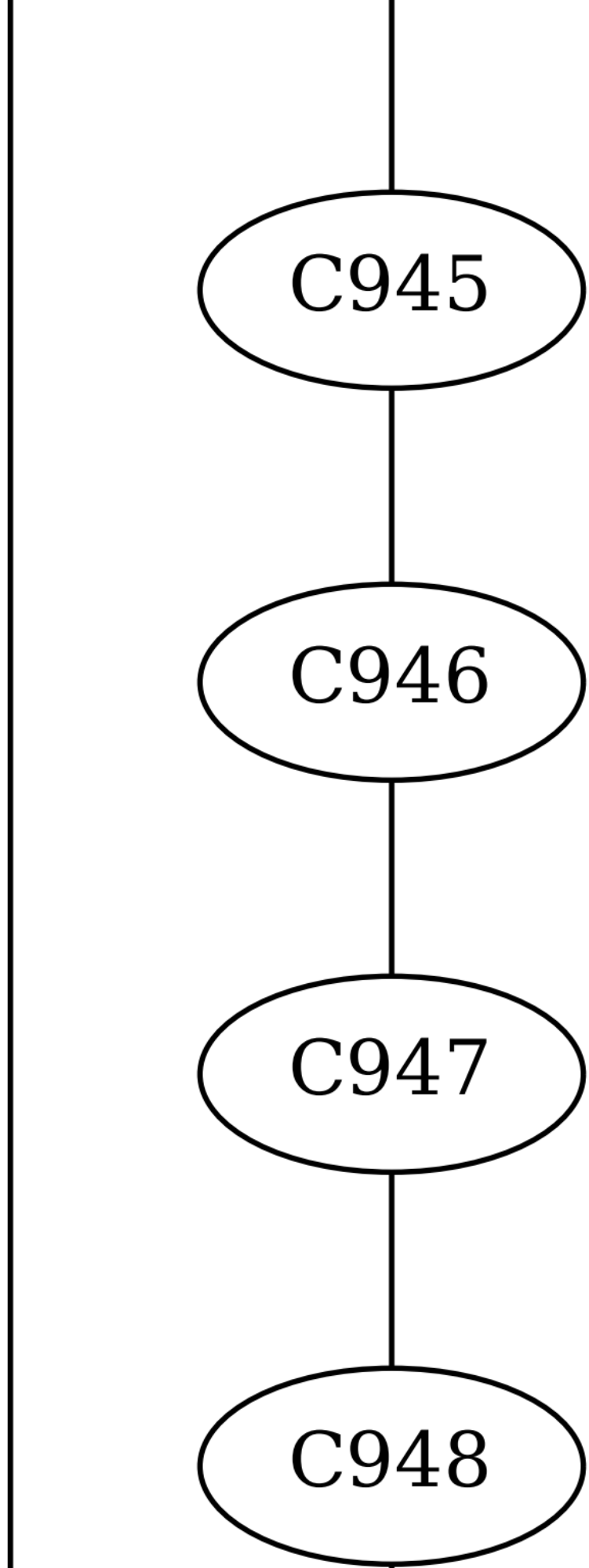
C945
C946
C947
C948

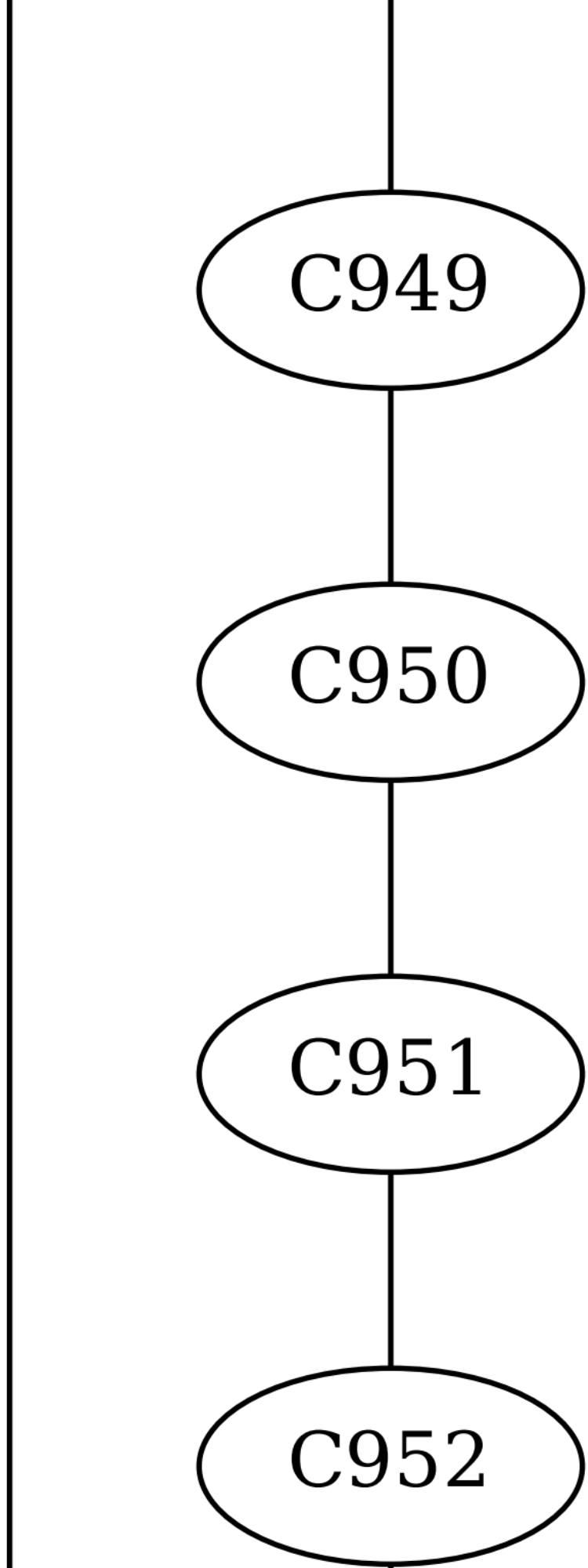
C949
C950
C951
C952

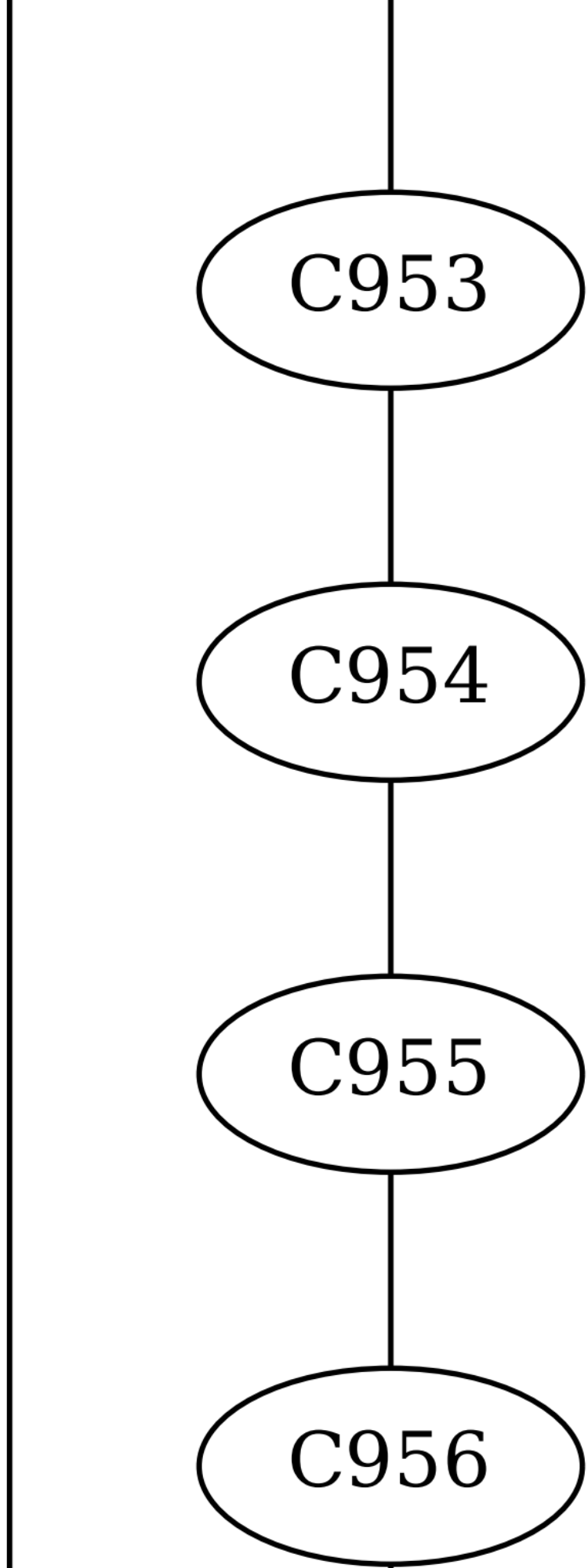
C953
C954
C955
C956

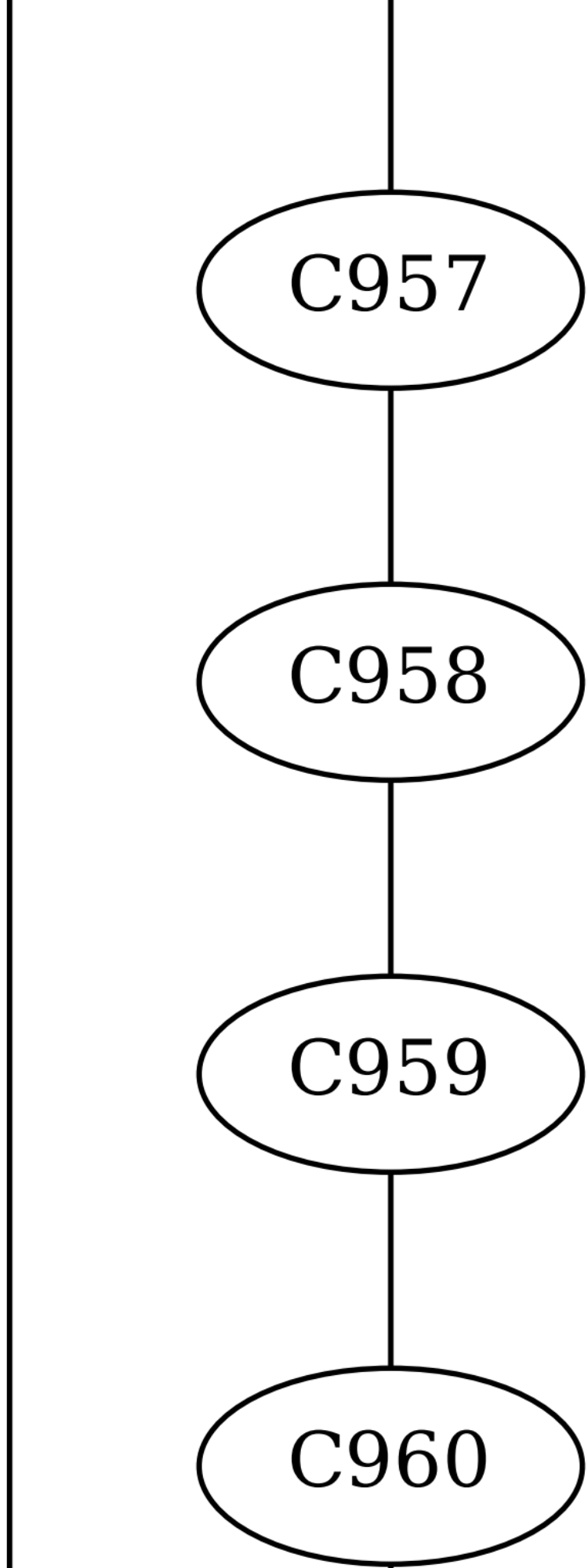
C957
C958
C959
C960

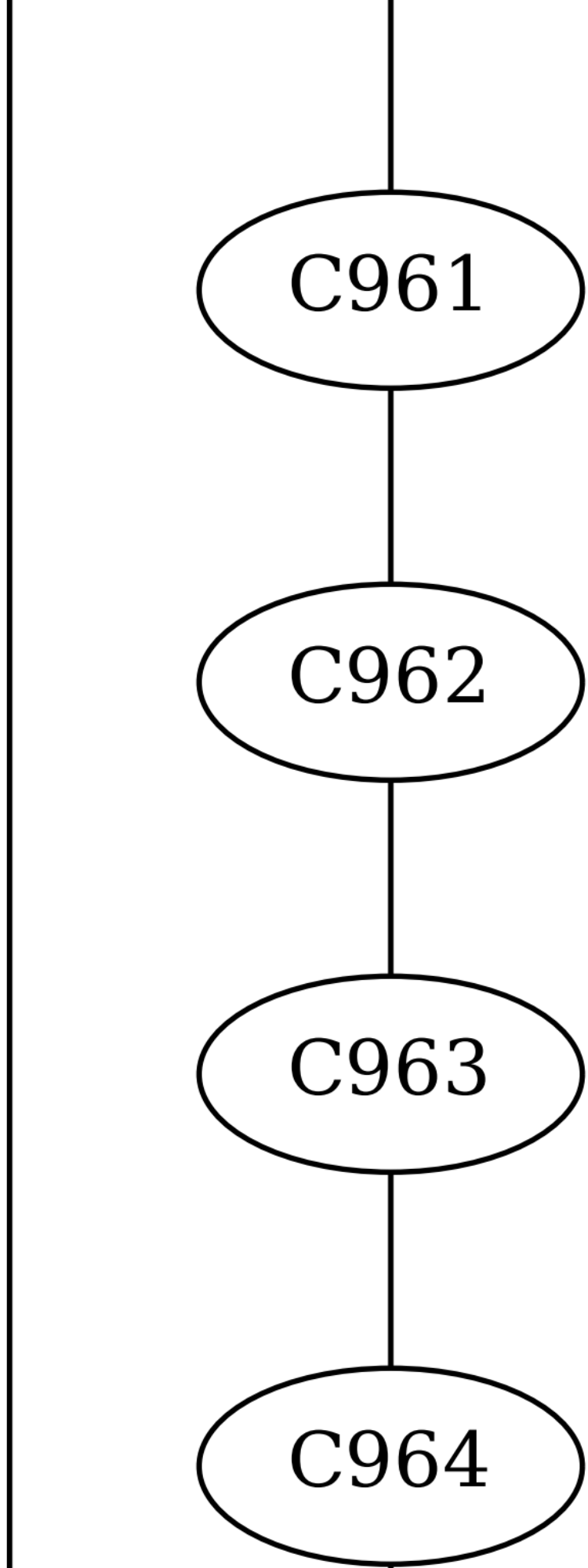
C961
C962
C963
C964

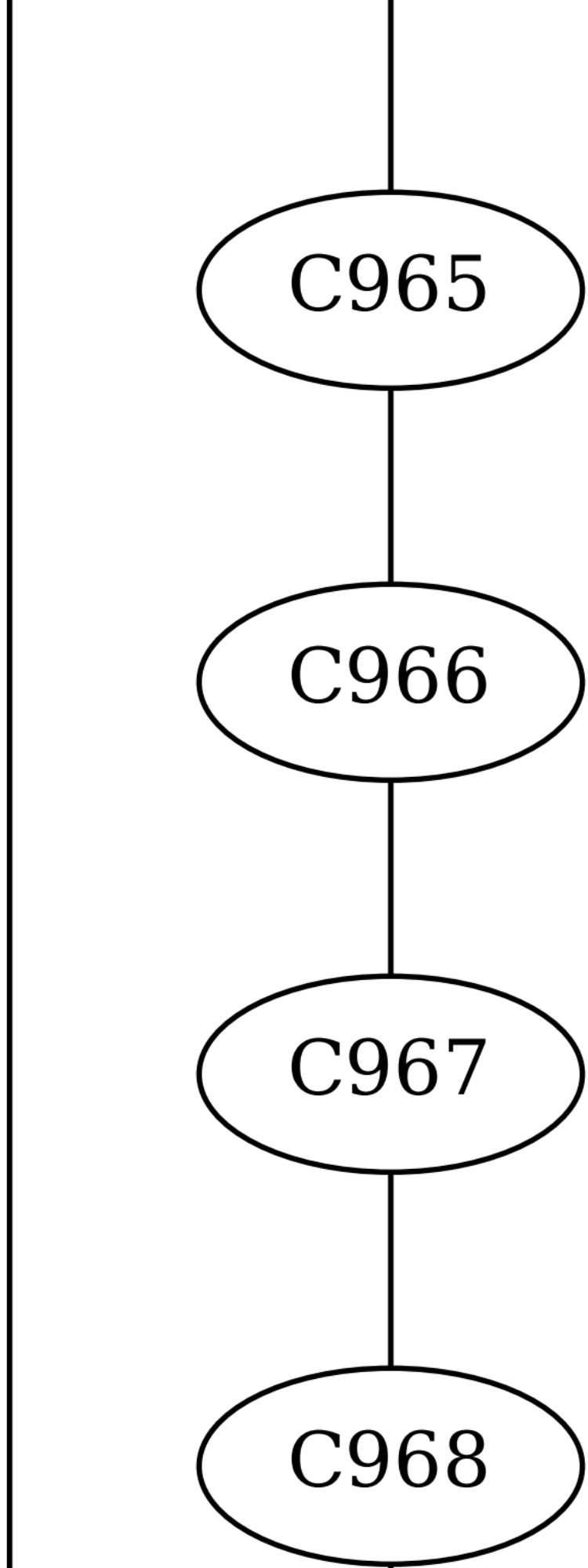
C965
C966
C967
C968

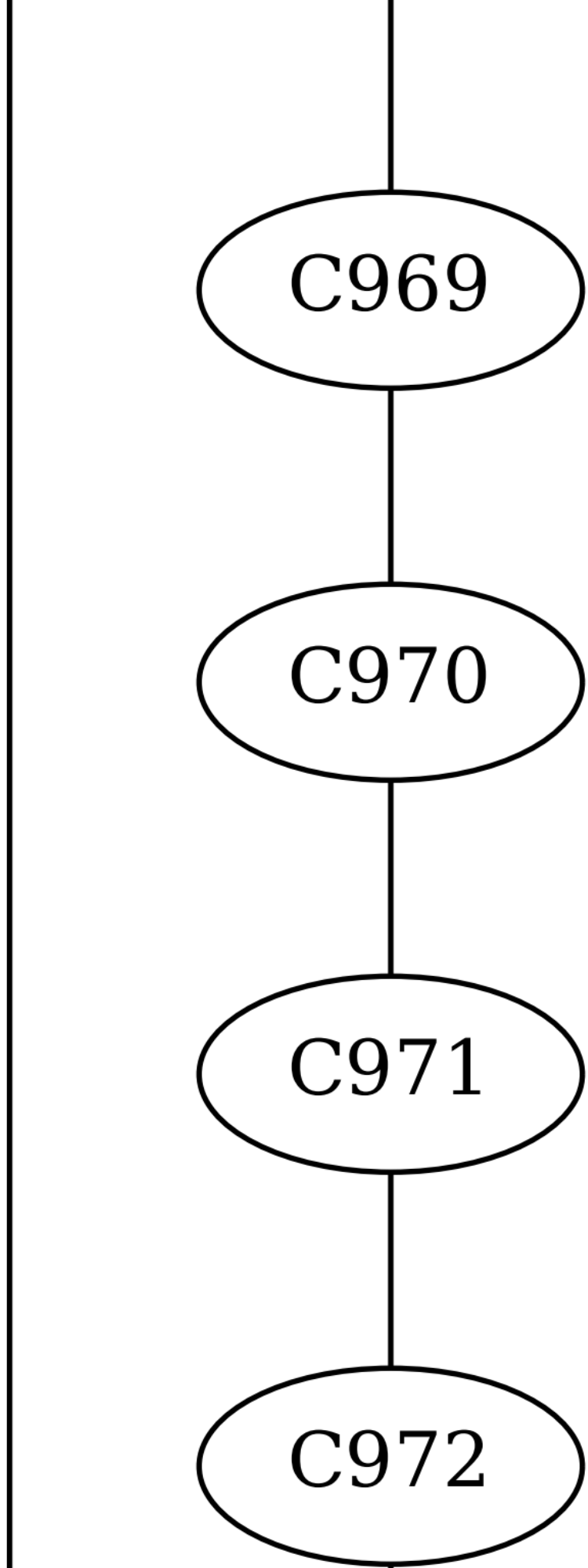
C969
C970
C971
C972

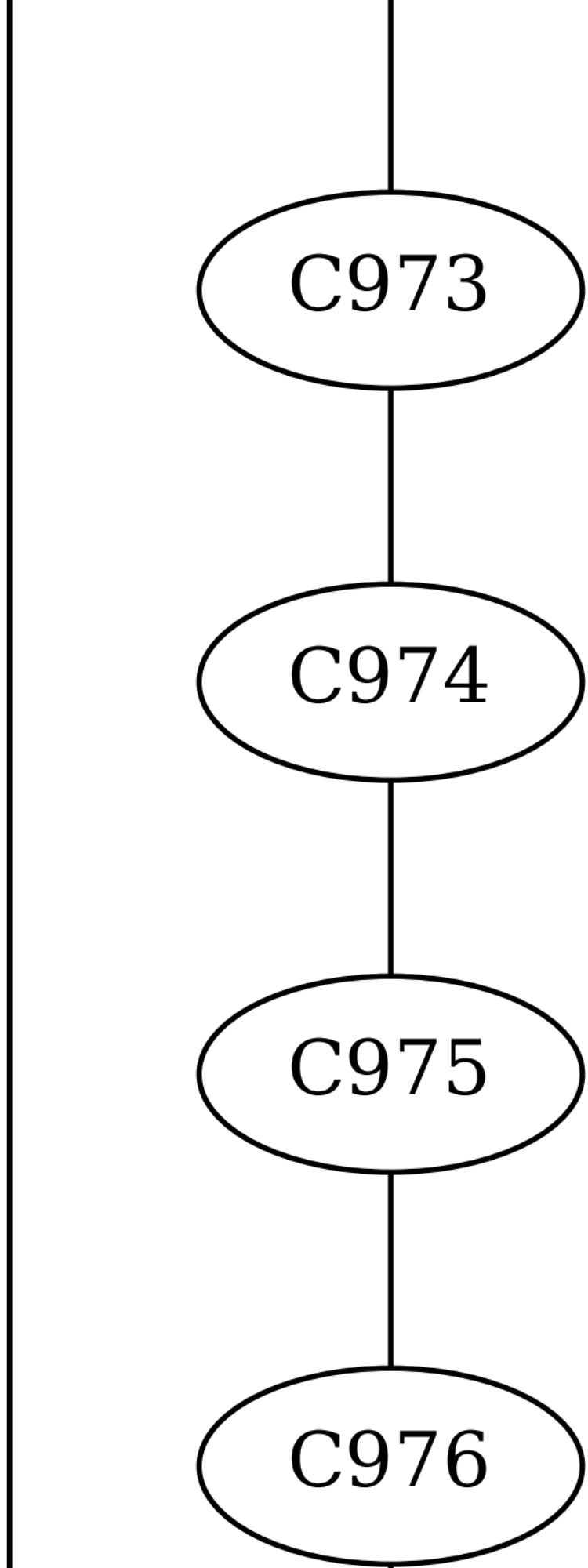
C973
C974
C975
C976

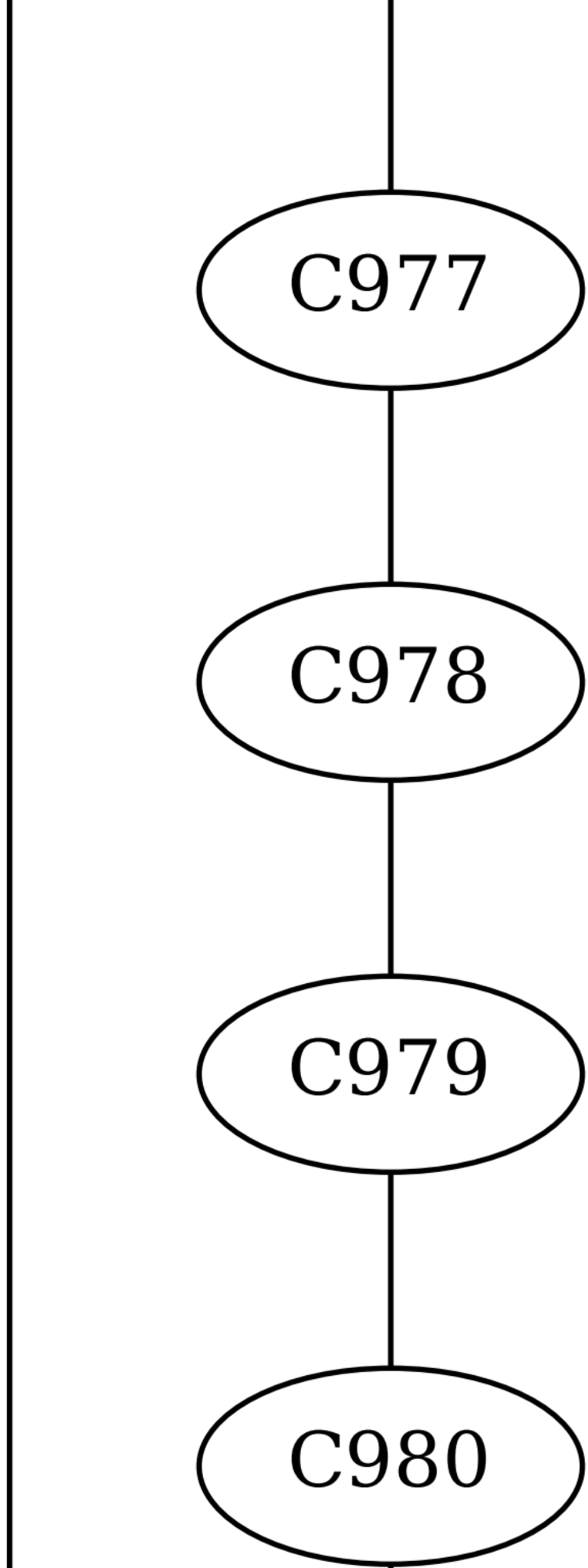
C977
C978
C979
C980

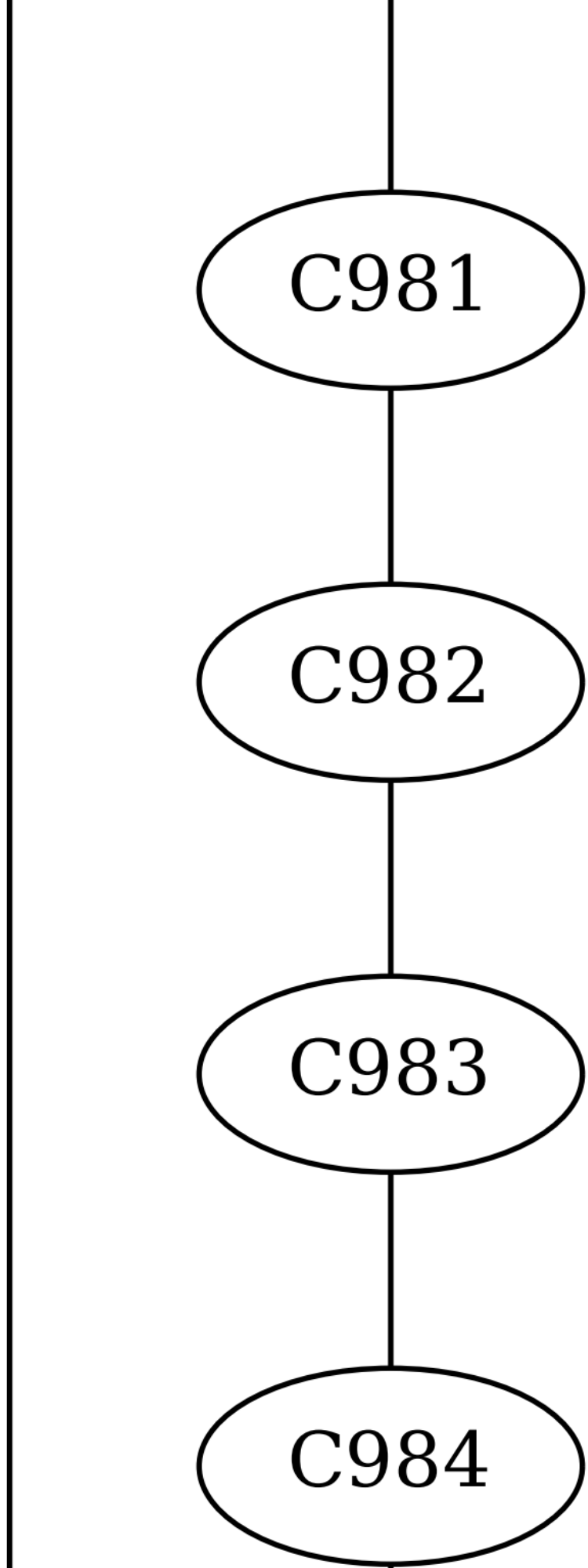
C981
C982
C983
C984

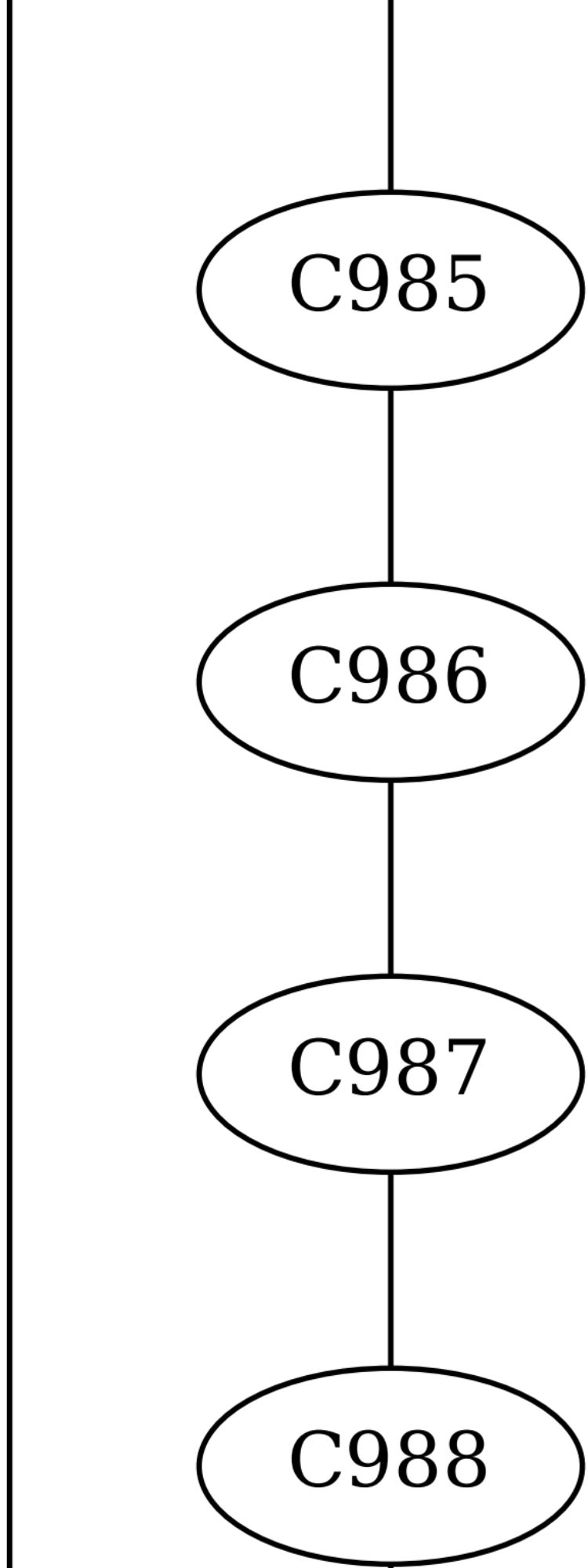
C985
C986
C987
C988

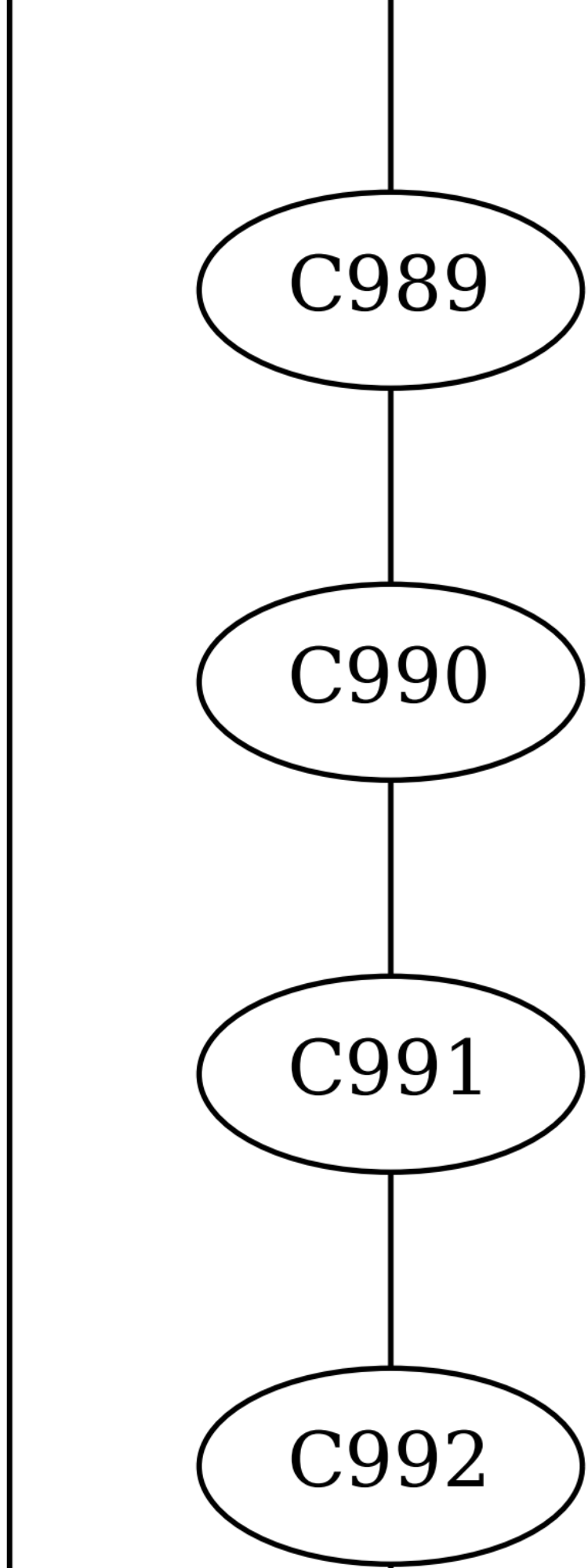
C989
C990
C991
C992

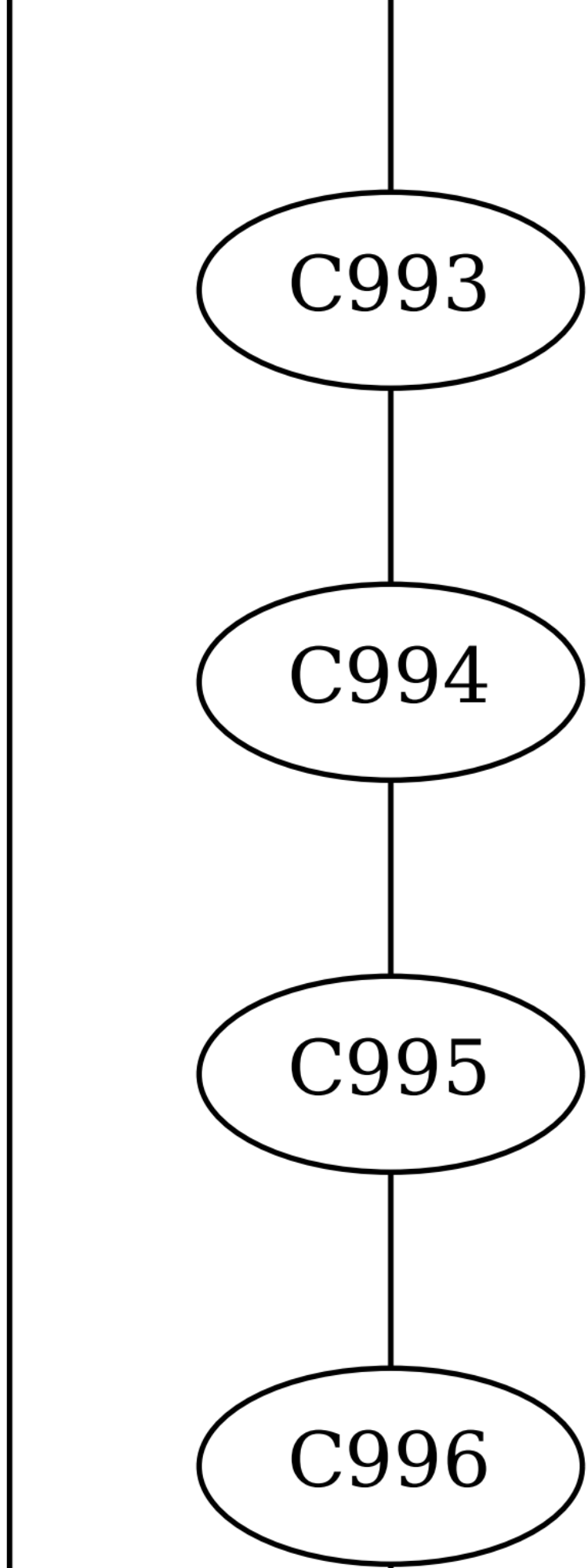
C993
C994
C995
C996

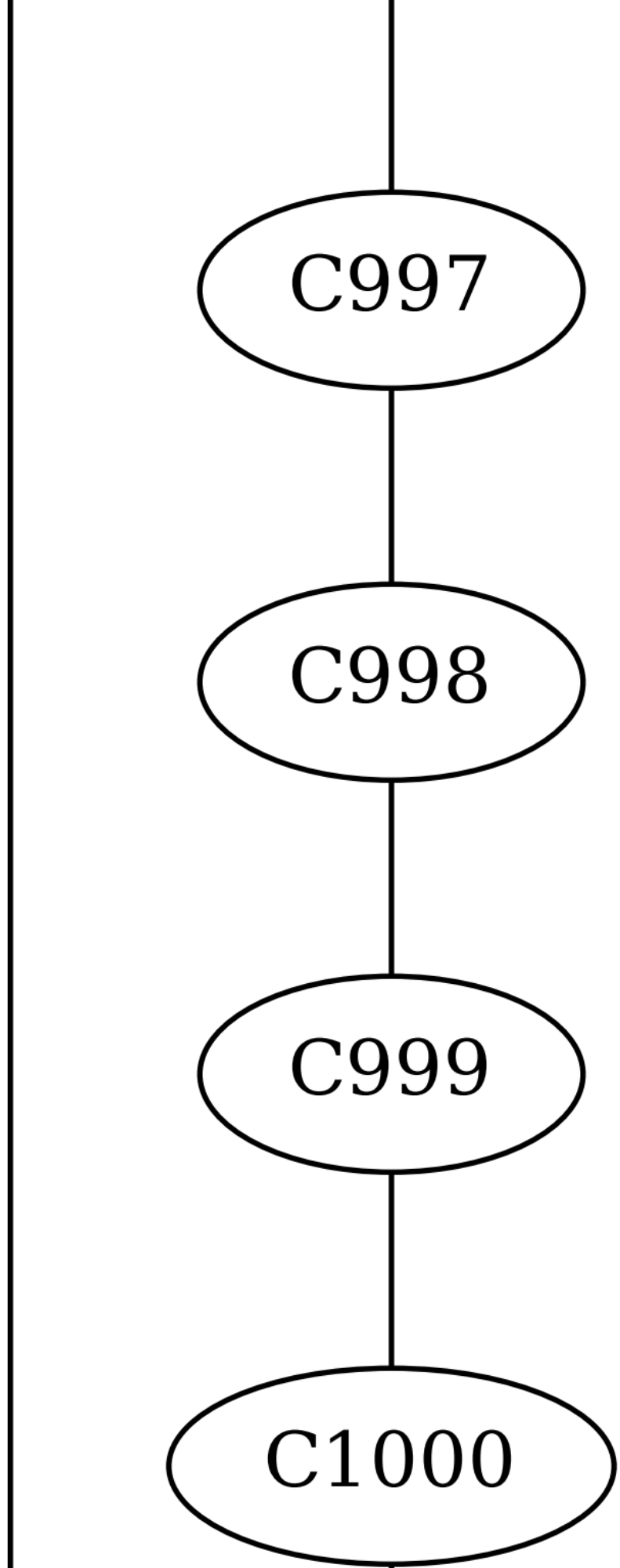
C997
C998
C999
C1000

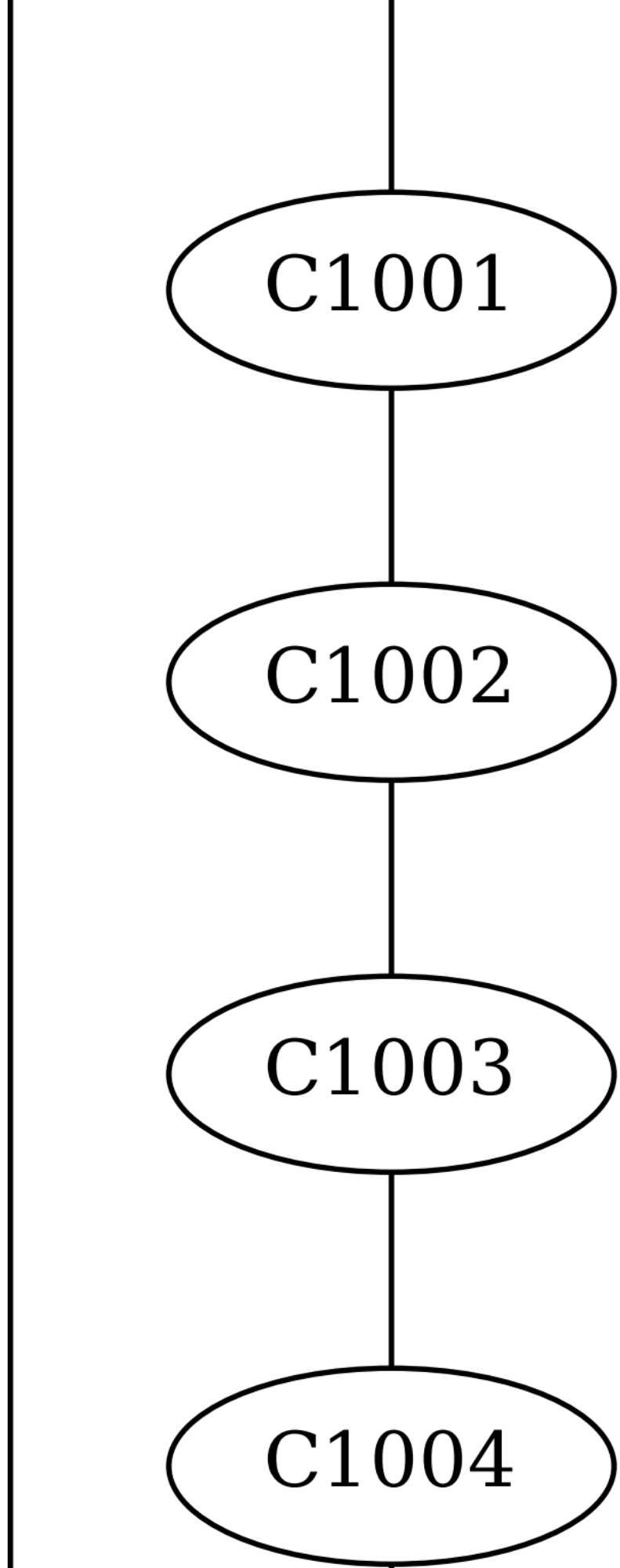
C1001
C1002
C1003
C1004

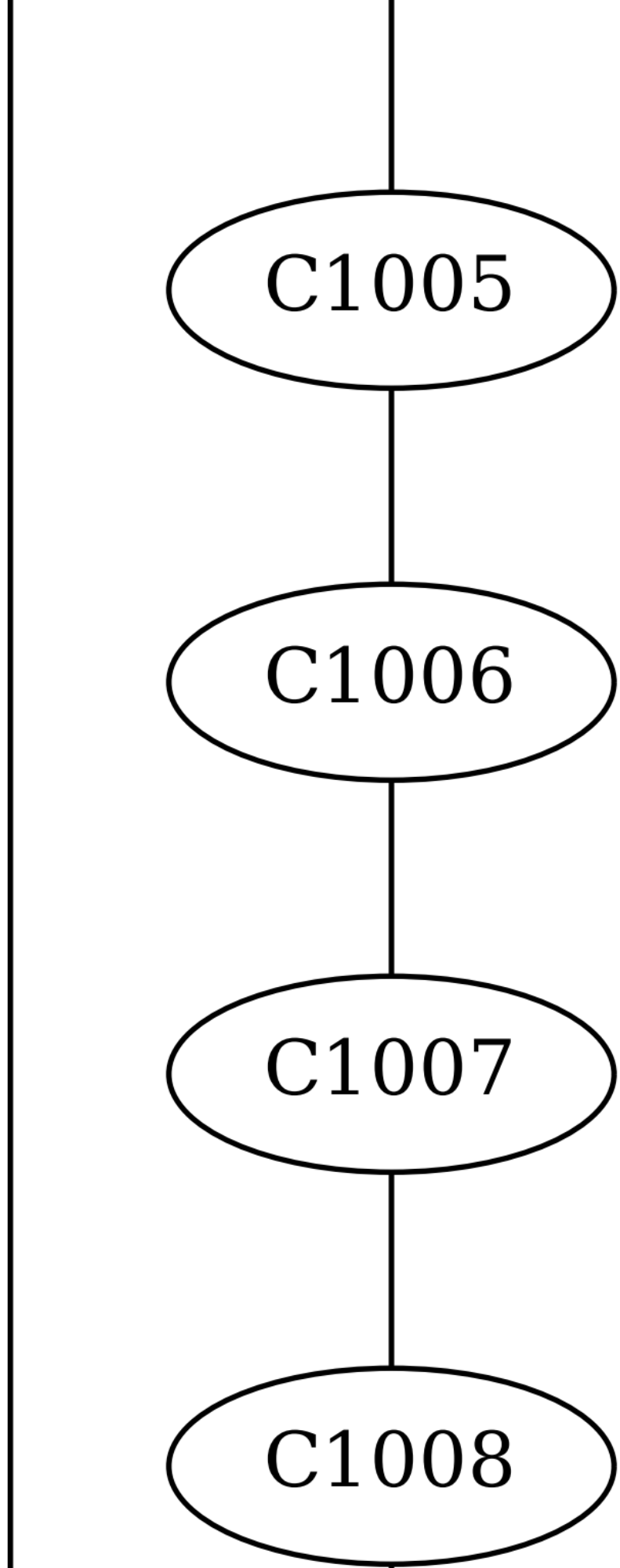
C1005
C1006
C1007
C1008

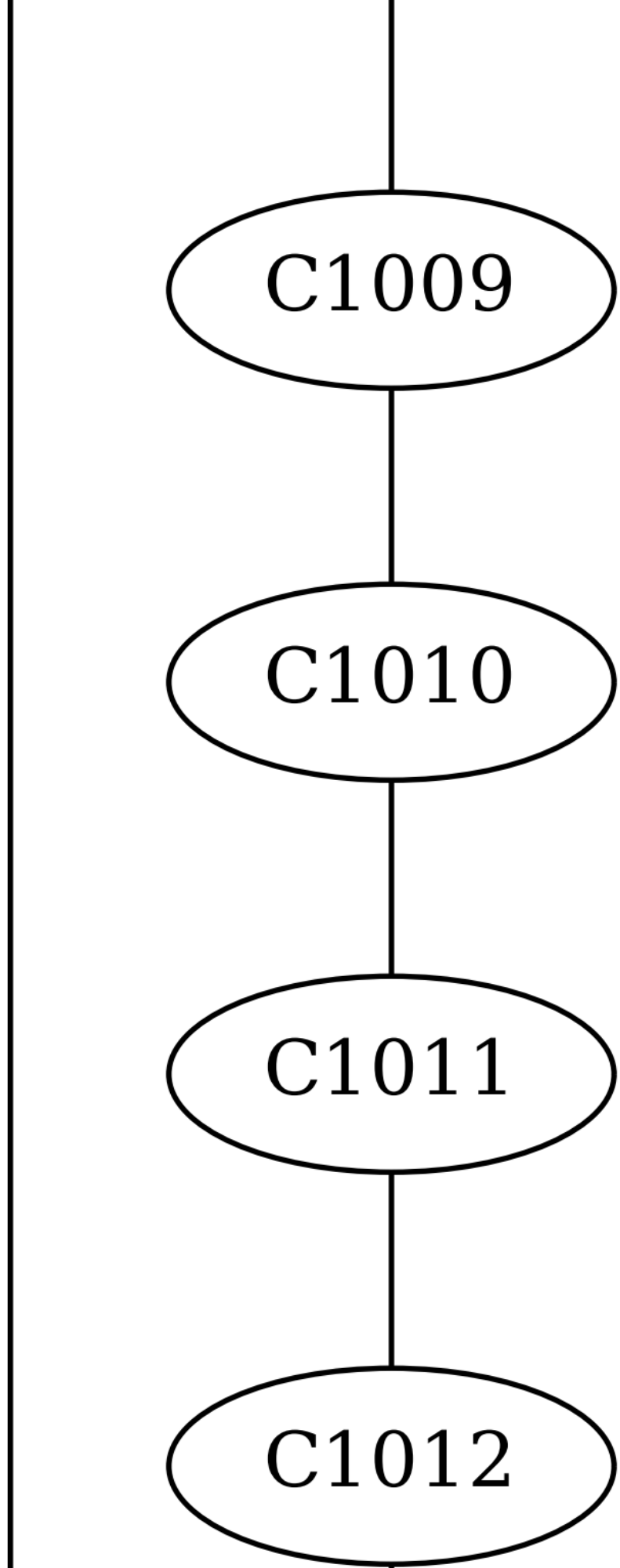
C1009
C1010
C1011
C1012

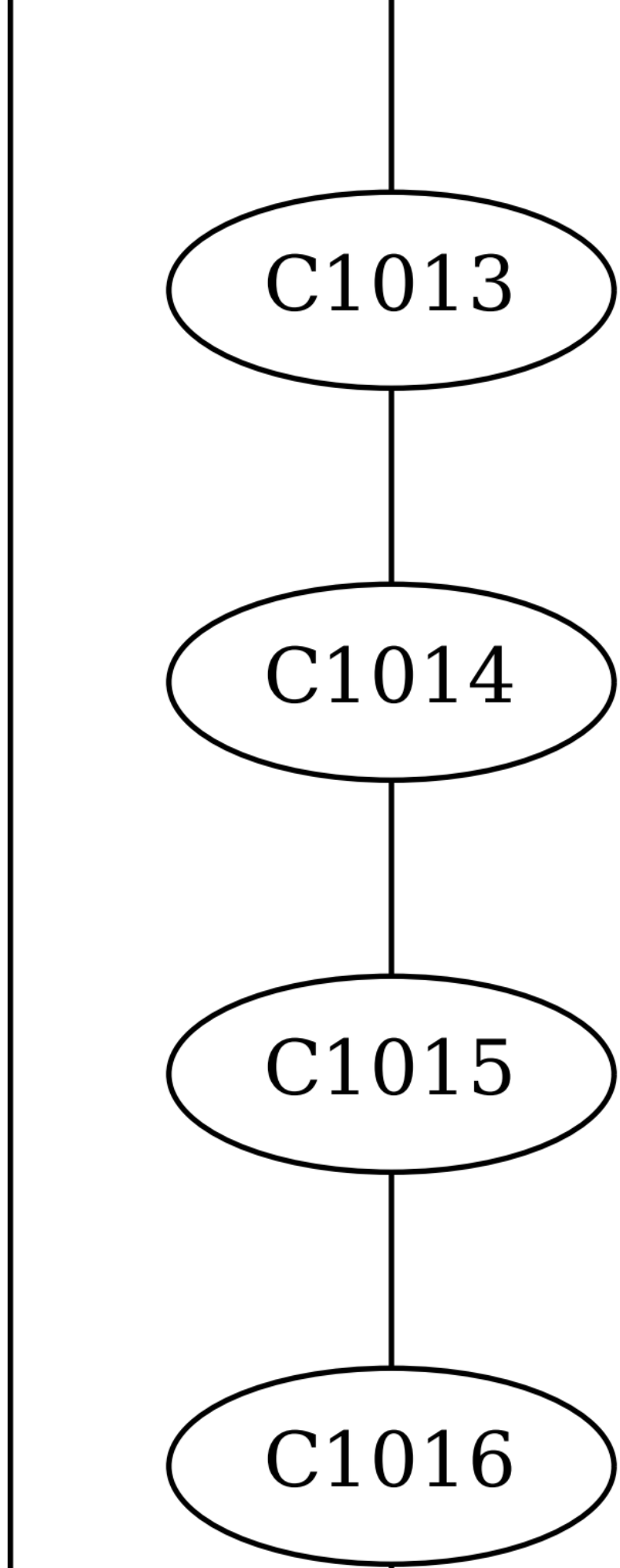
C1013
C1014
C1015
C1016

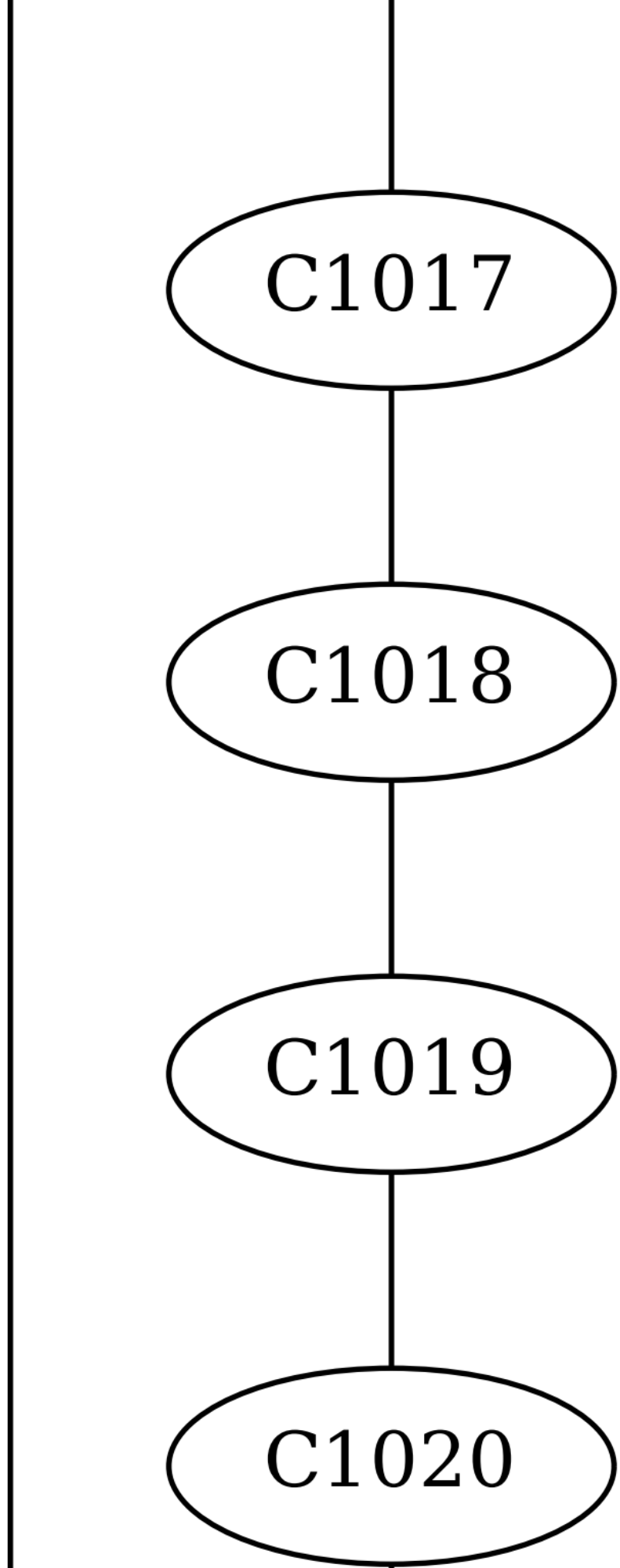
C1017
C1018
C1019
C1020

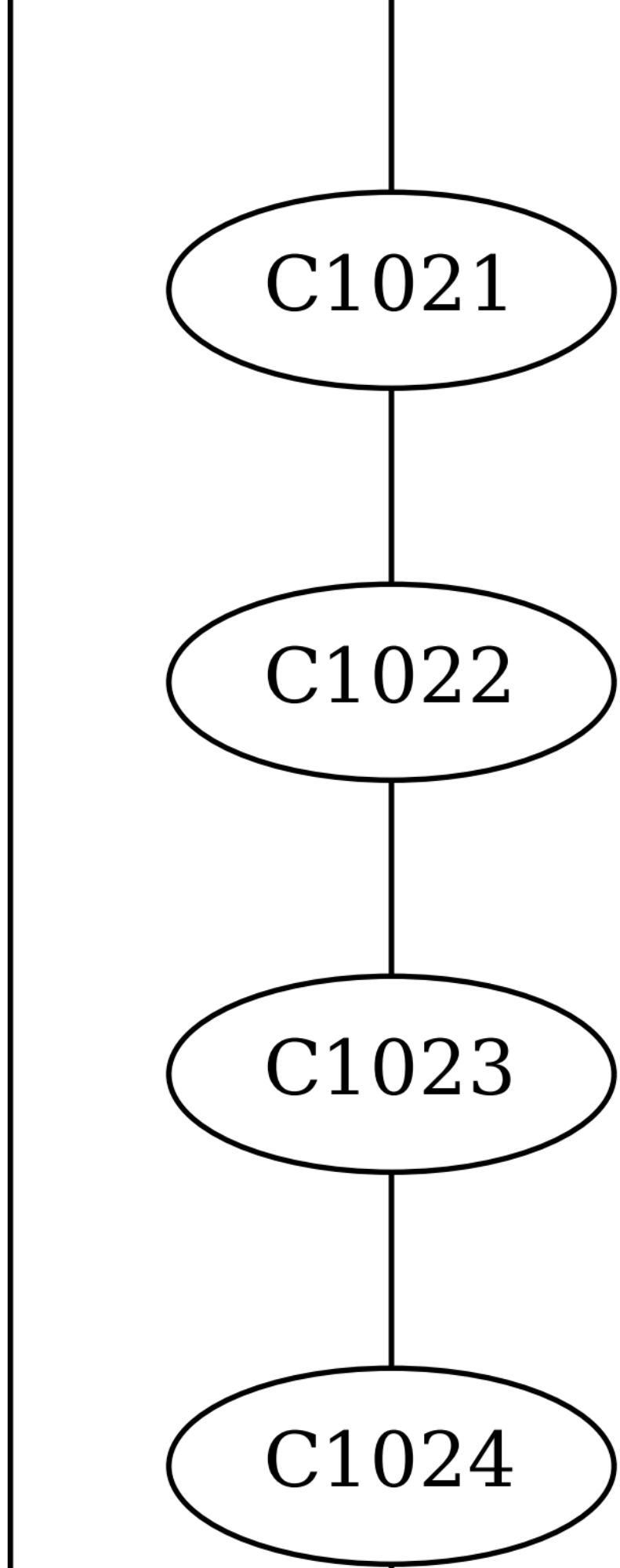
C1021
C1022
C1023
C1024

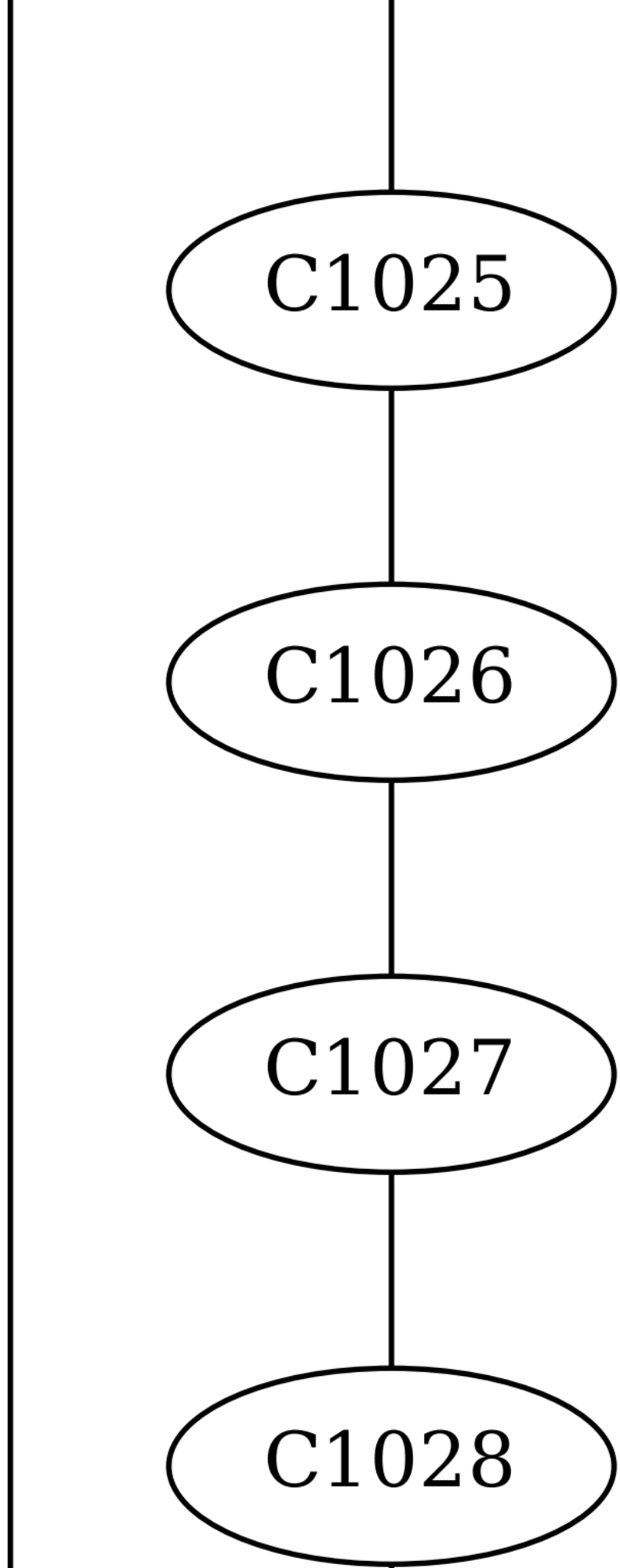
C1025
C1026
C1027
C1028

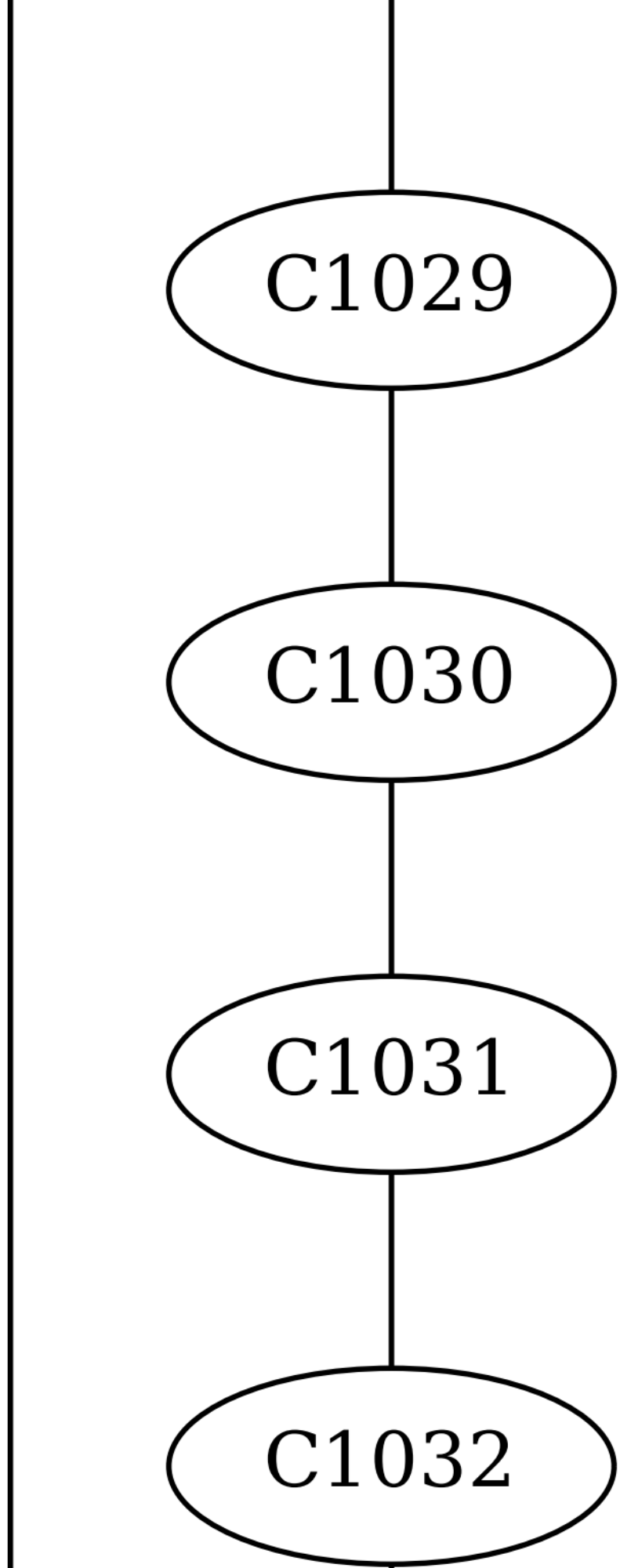
C1029
C1030
C1031
C1032

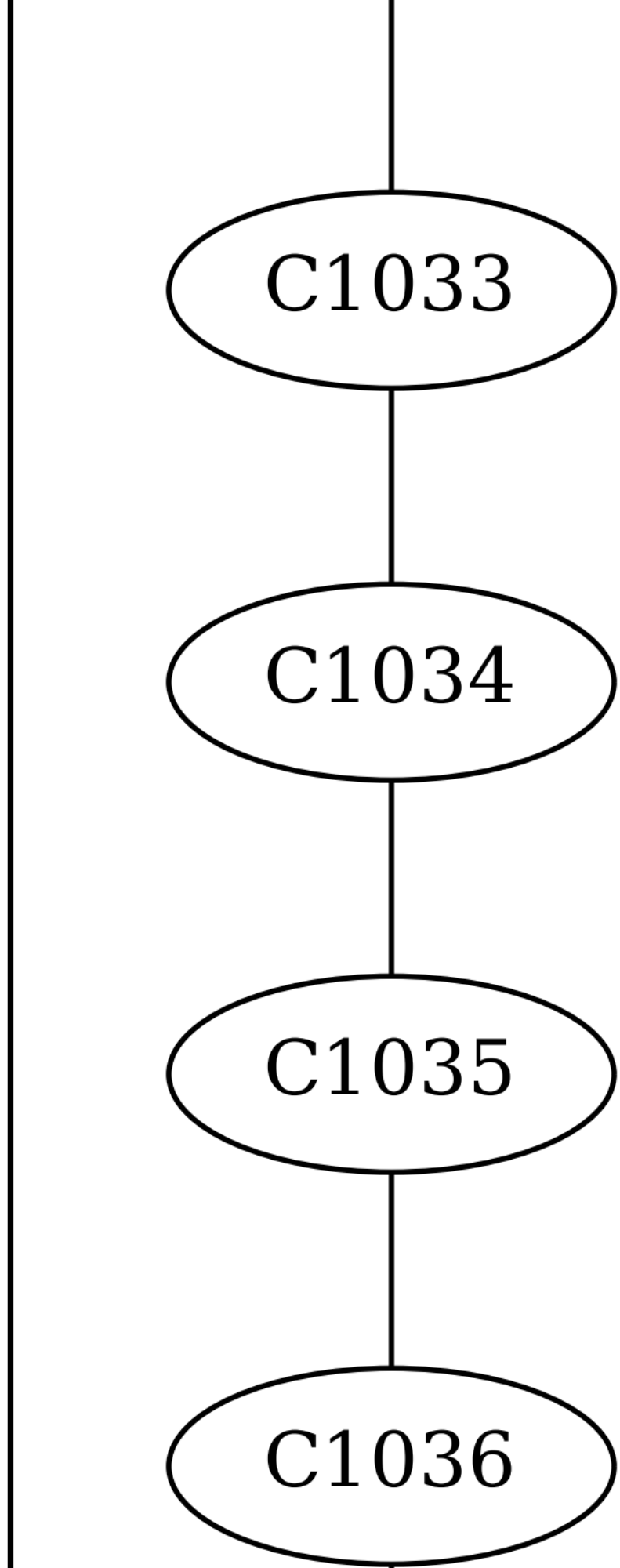
C1033
C1034
C1035
C1036

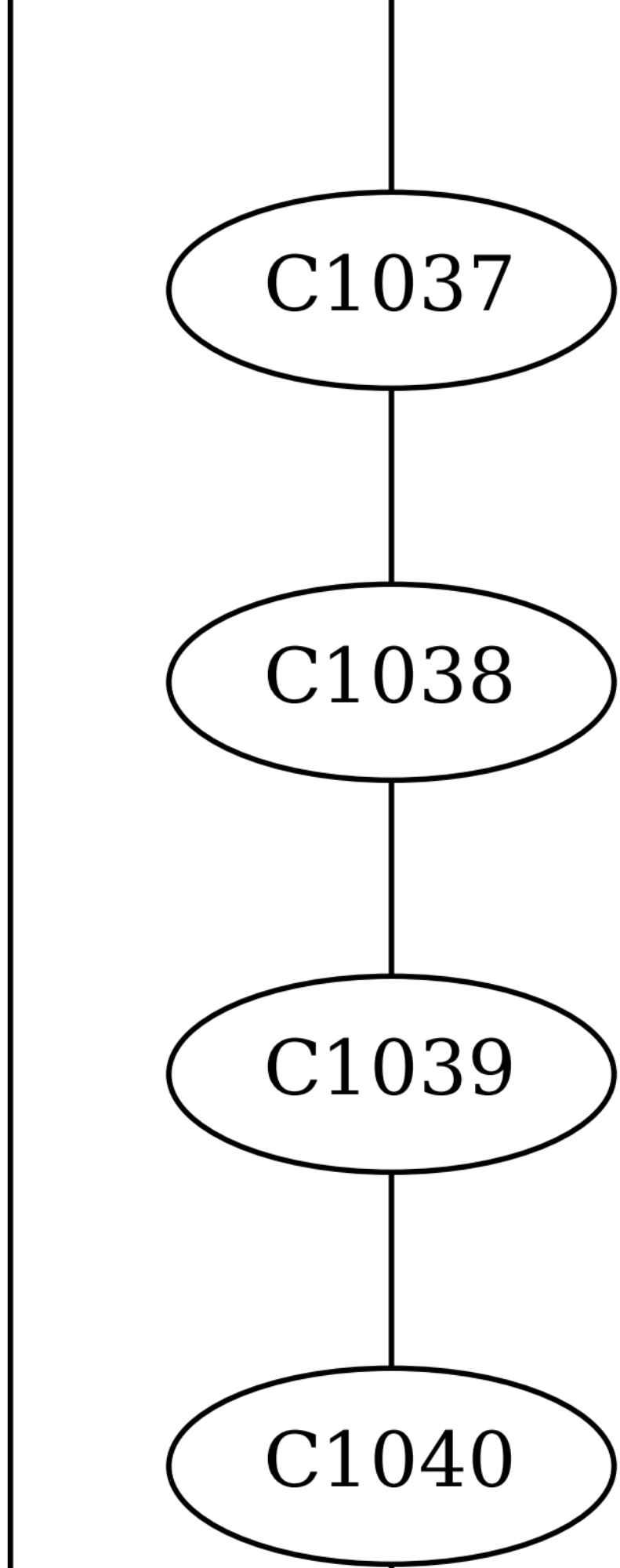
C1037
C1038
C1039
C1040

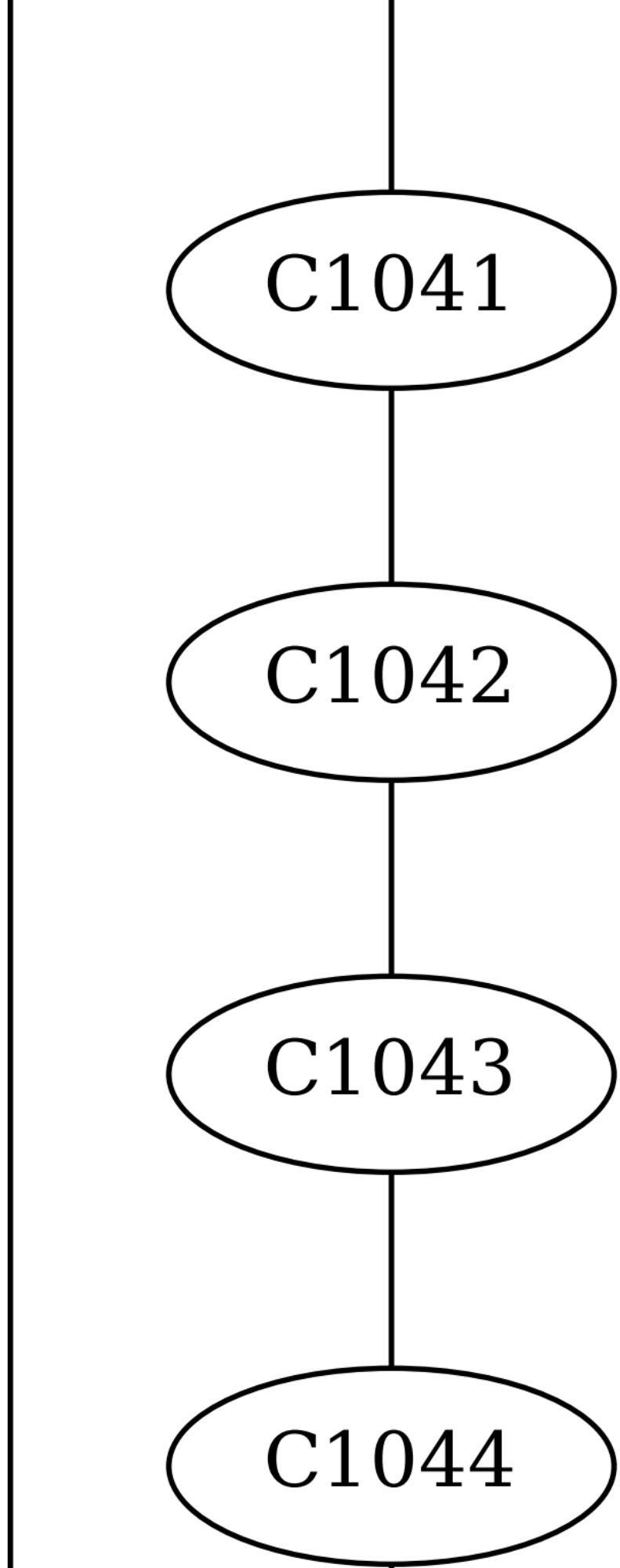
C1041
C1042
C1043
C1044

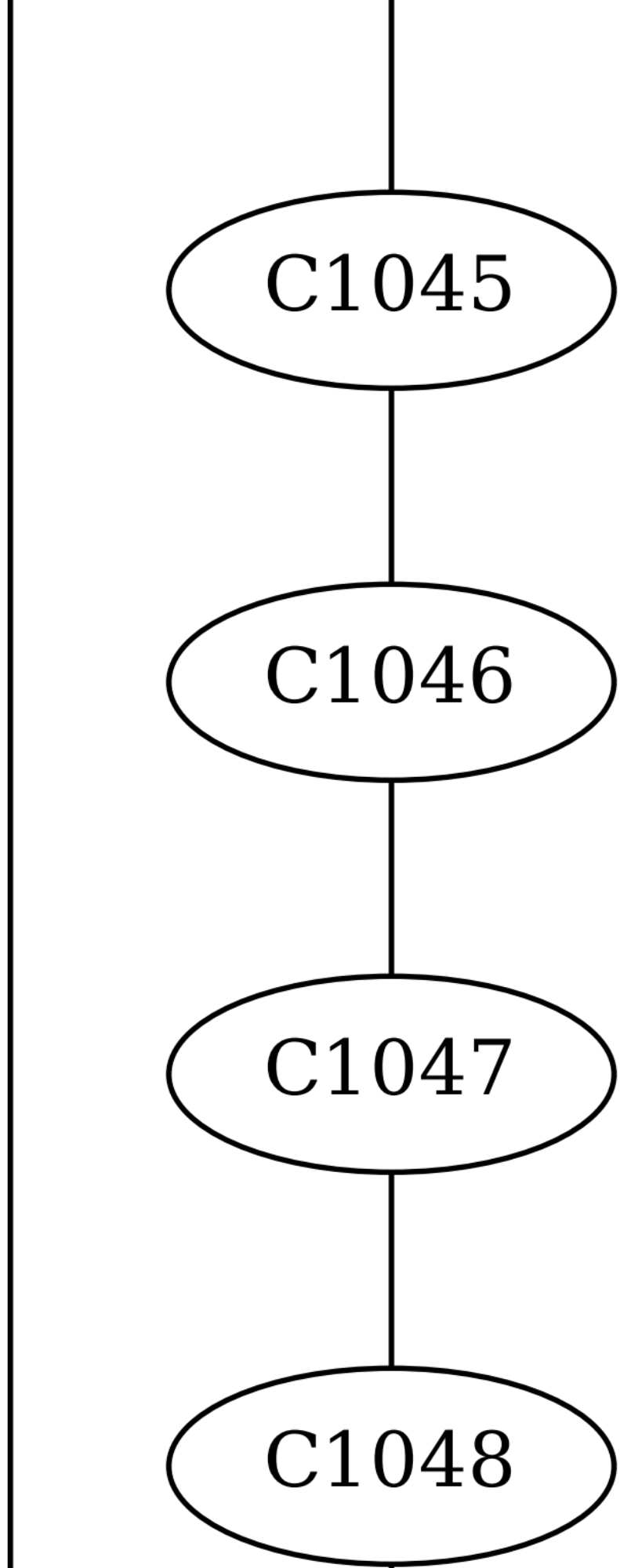
C1045
C1046
C1047
C1048

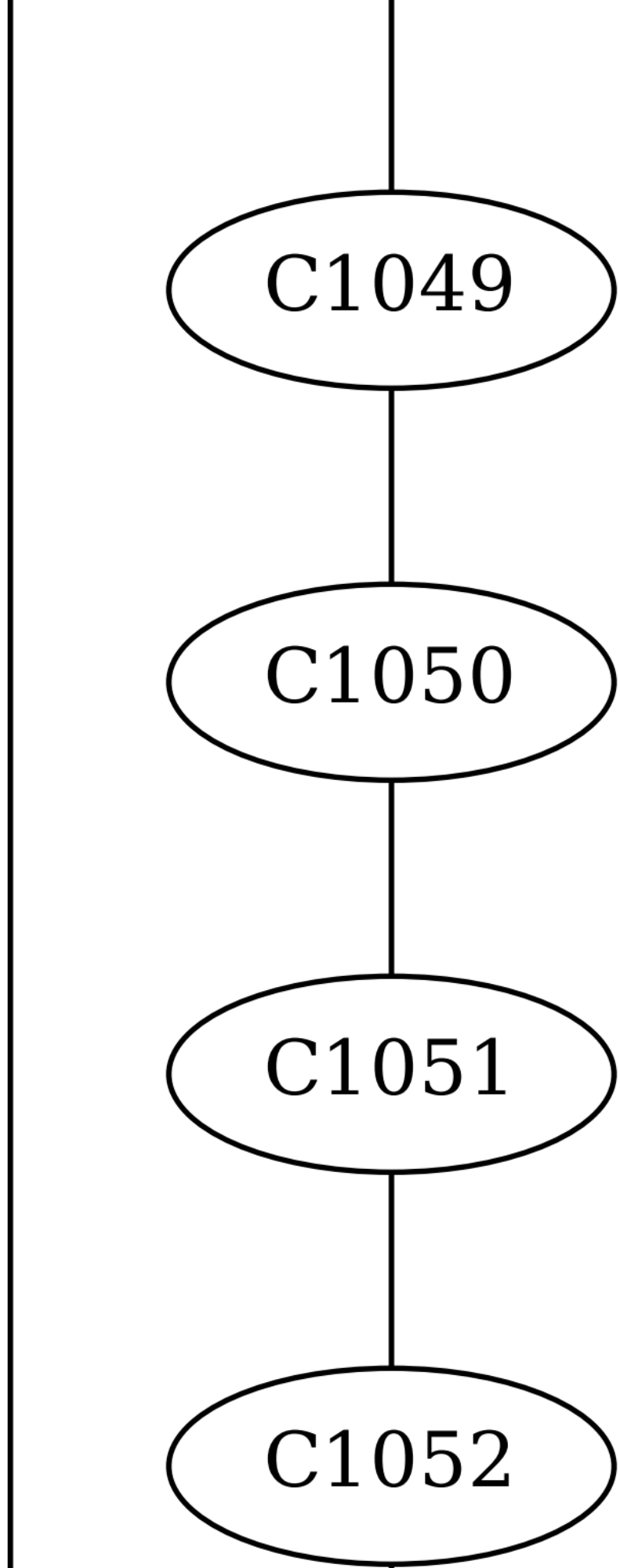
C1049
C1050
C1051
C1052

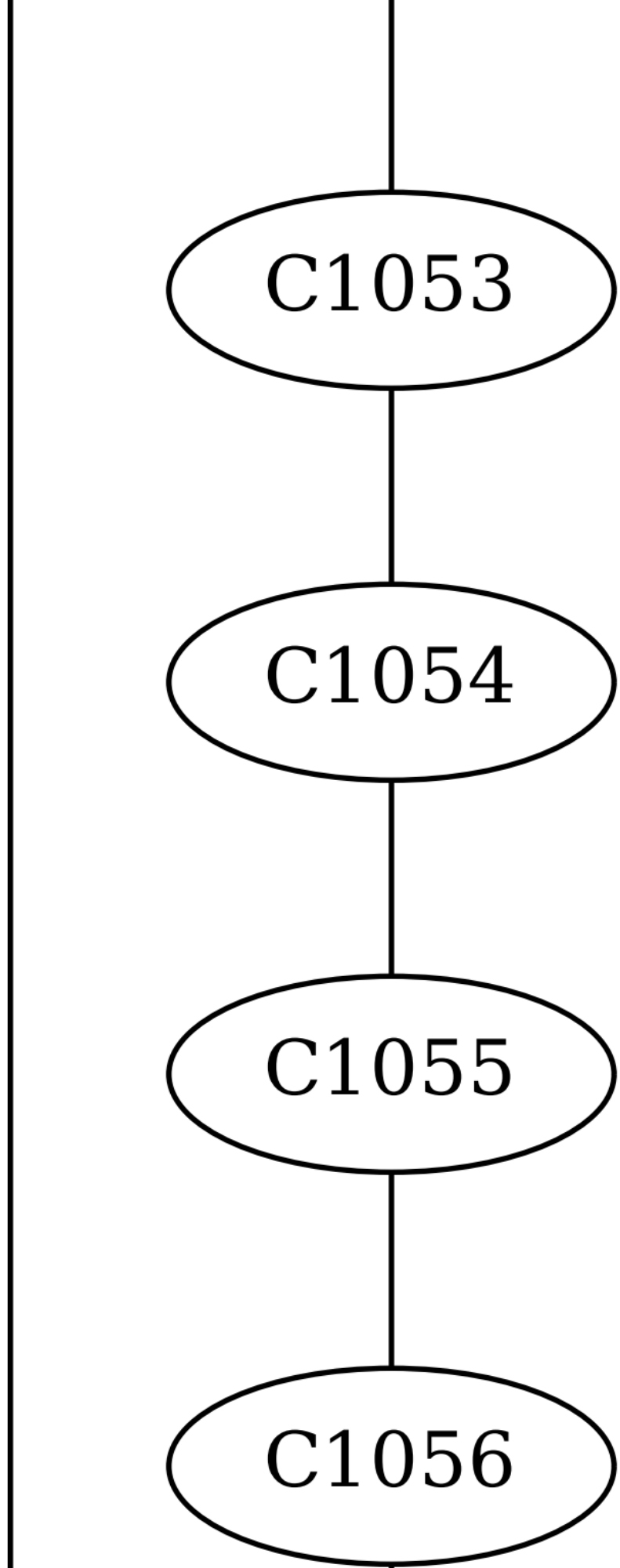
C1053
C1054
C1055
C1056

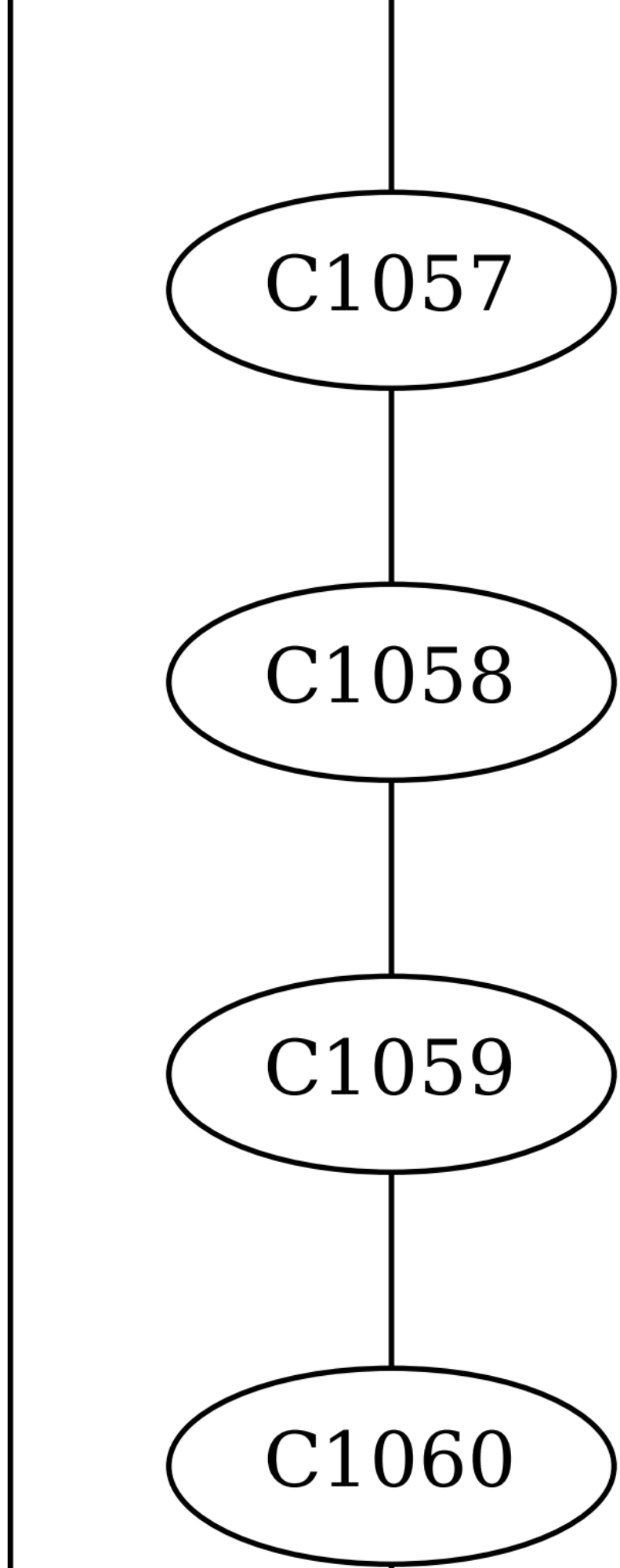
C1057
C1058
C1059
C1060

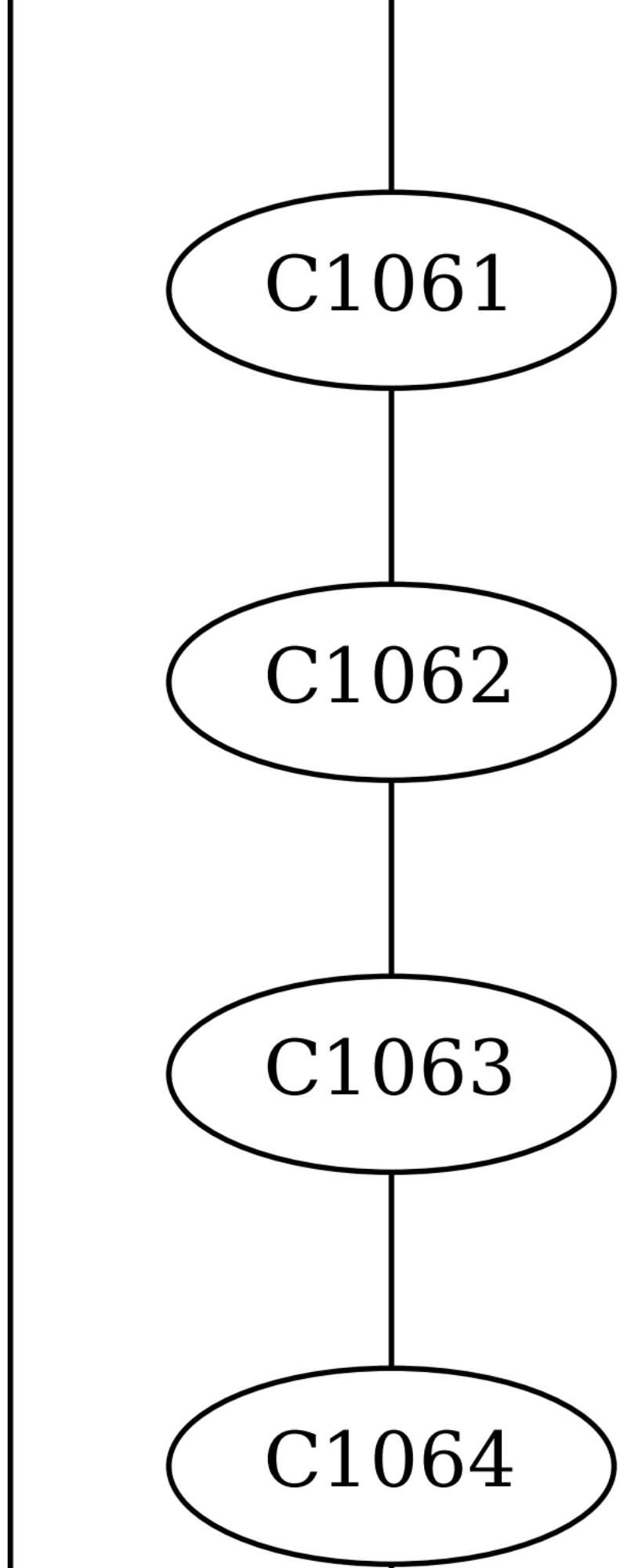
C1061
C1062
C1063
C1064

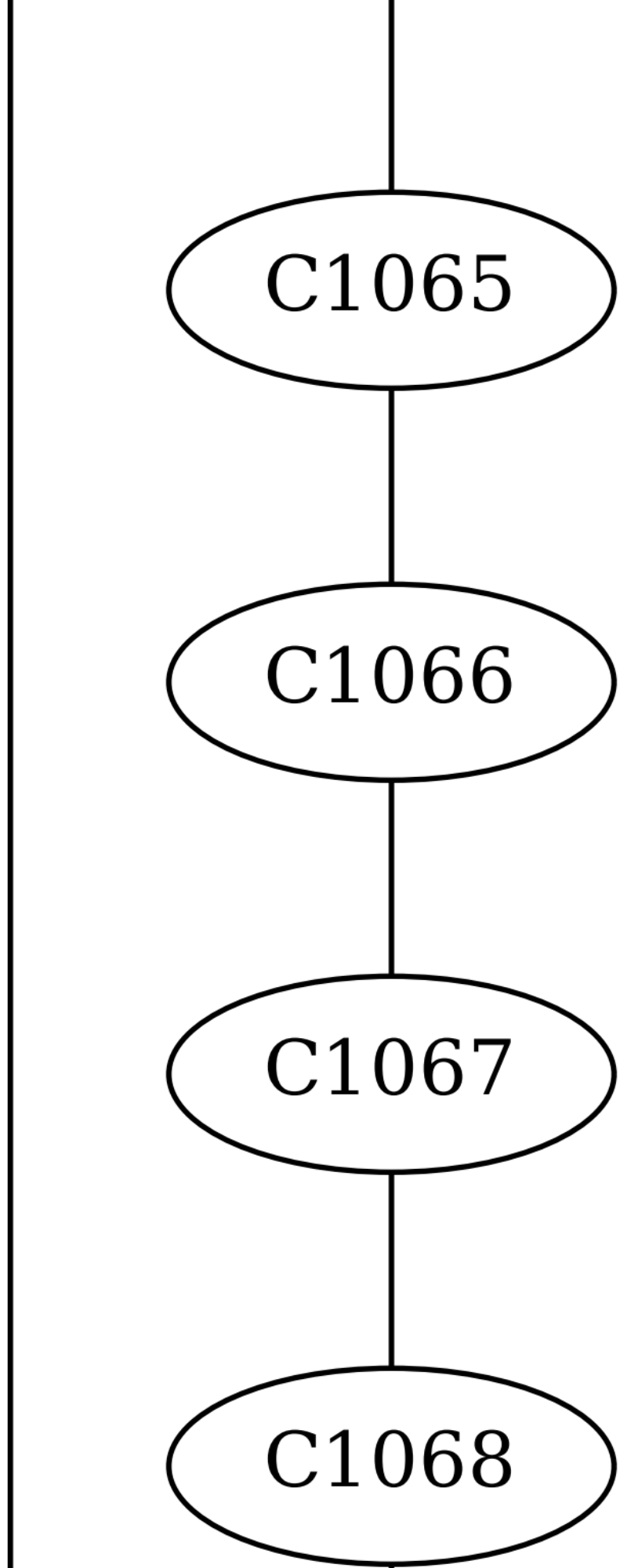
C1065
C1066
C1067
C1068

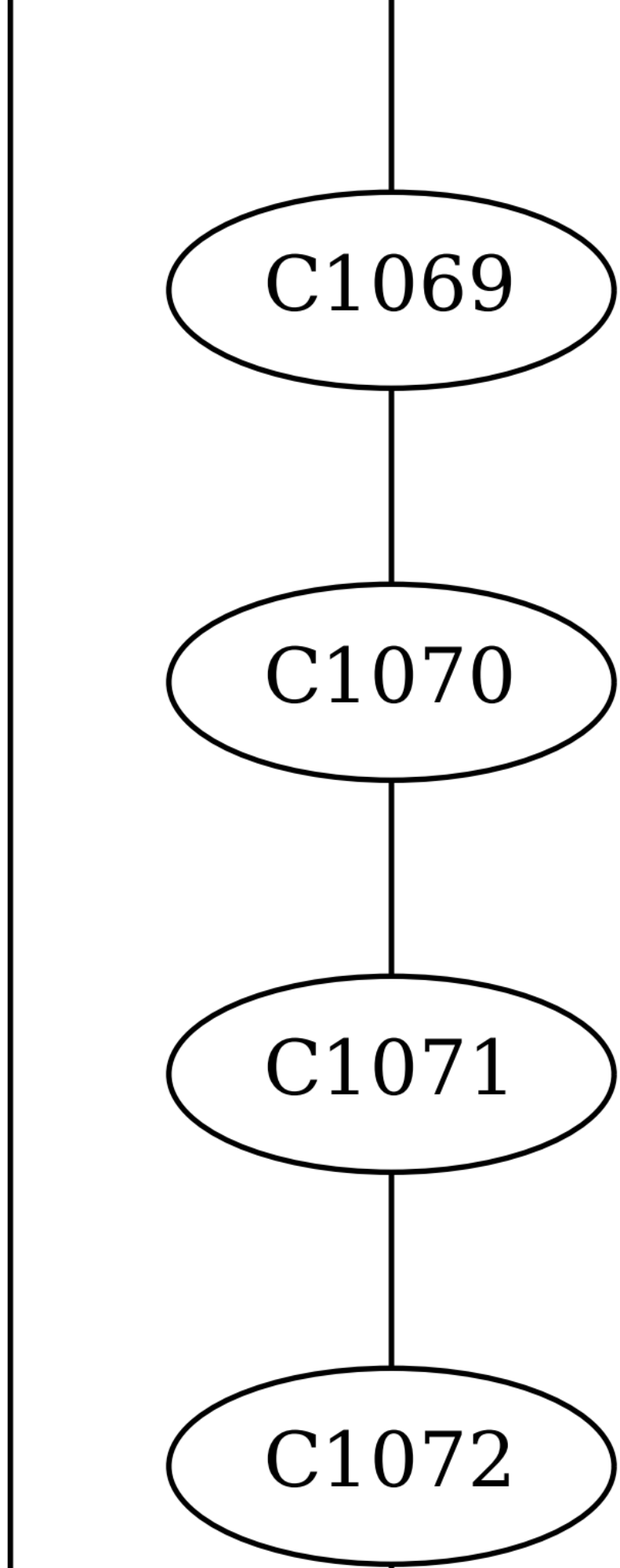
C1069
C1070
C1071
C1072

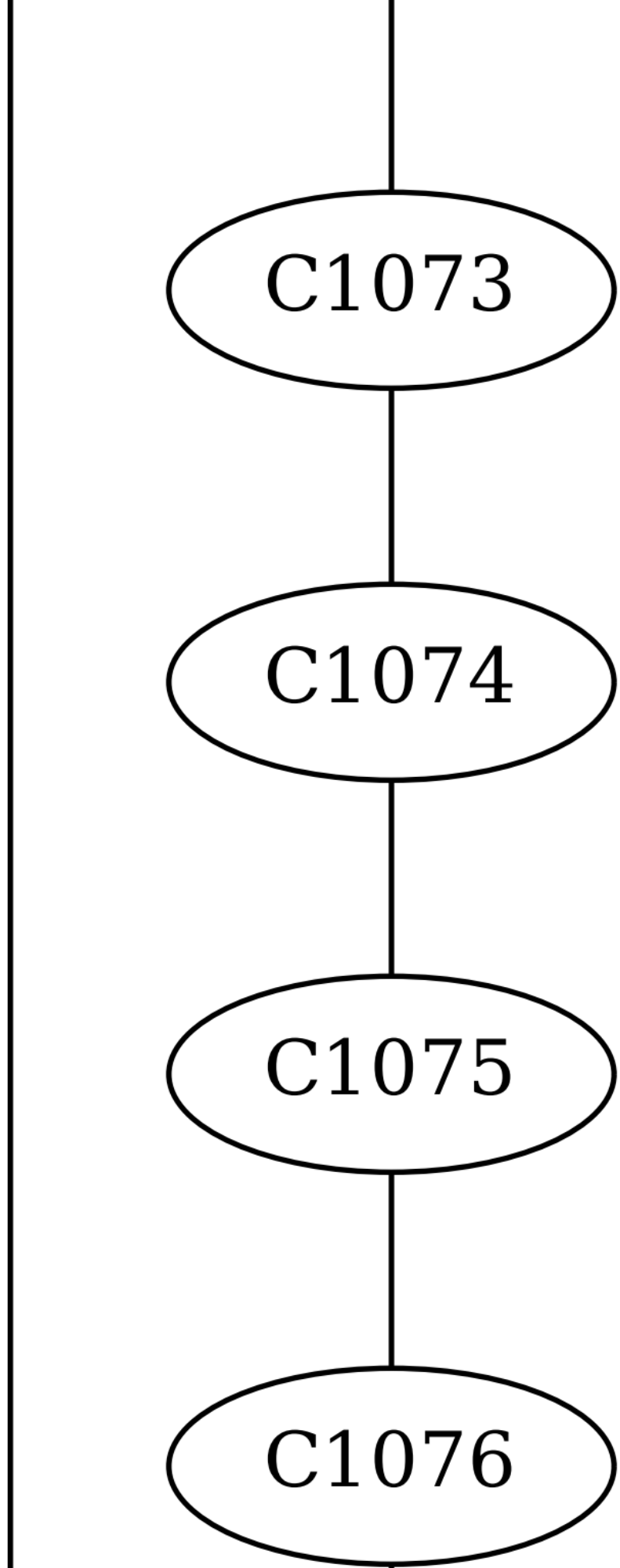
C1073
C1074
C1075
C1076

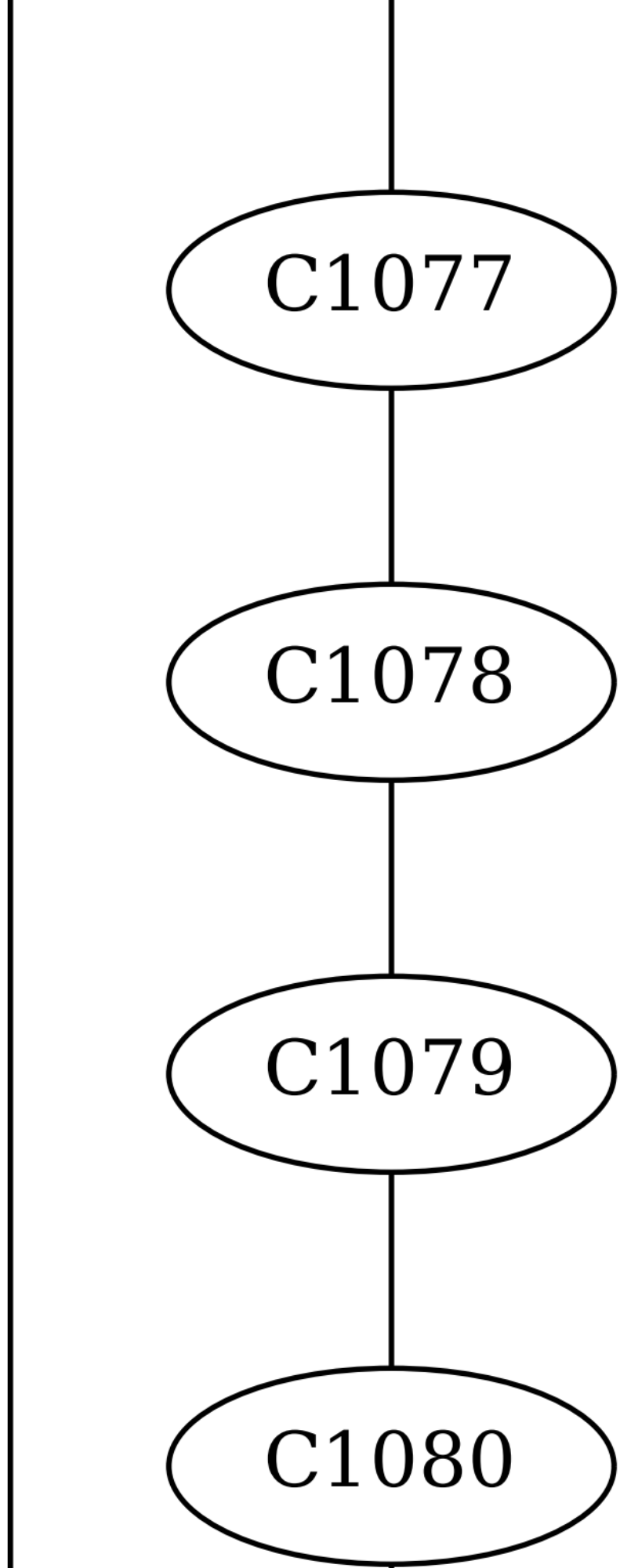
C1077
C1078
C1079
C1080

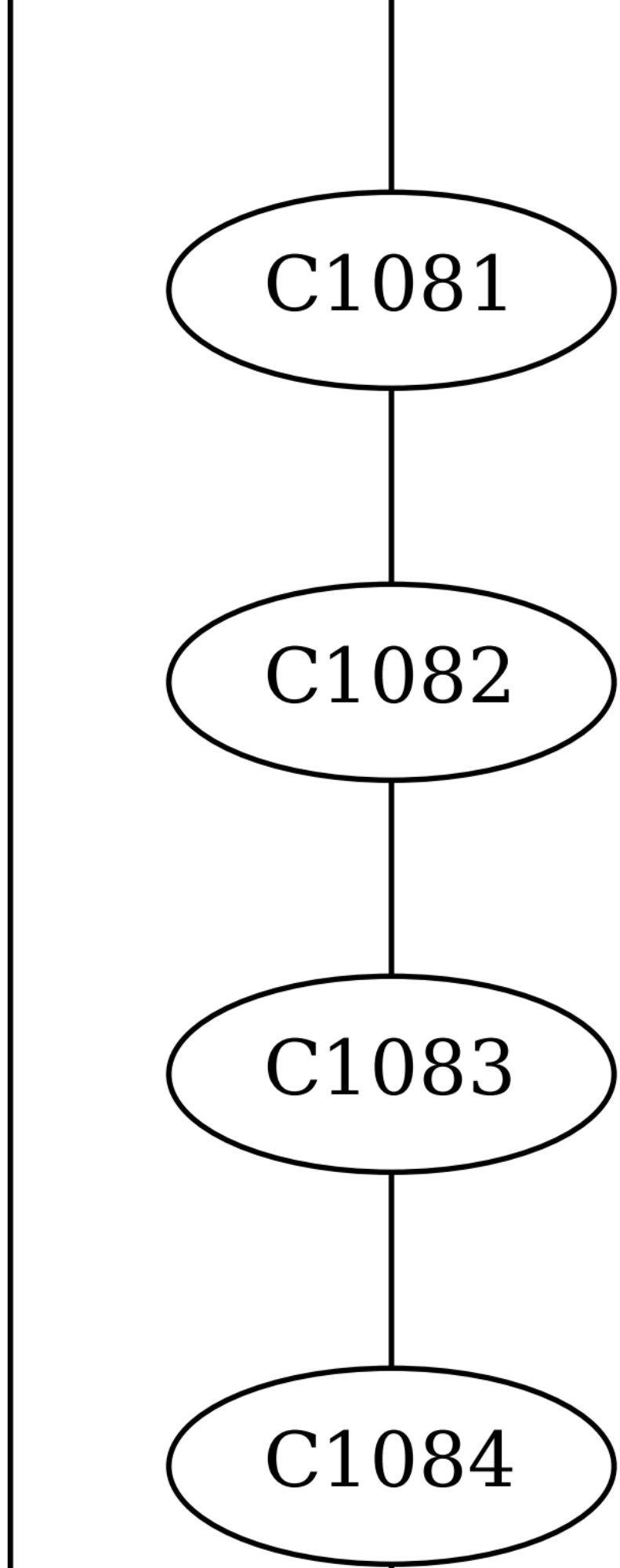
C1081
C1082
C1083
C1084

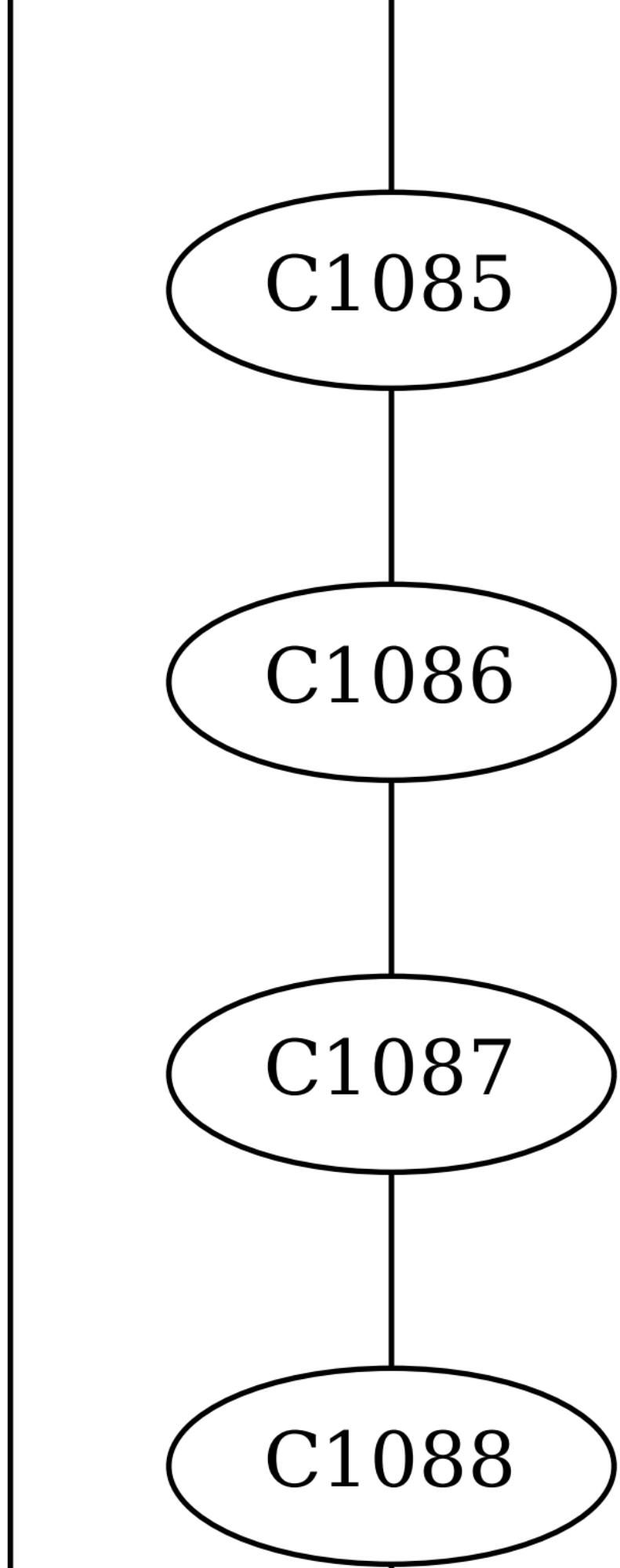
C1085
C1086
C1087
C1088

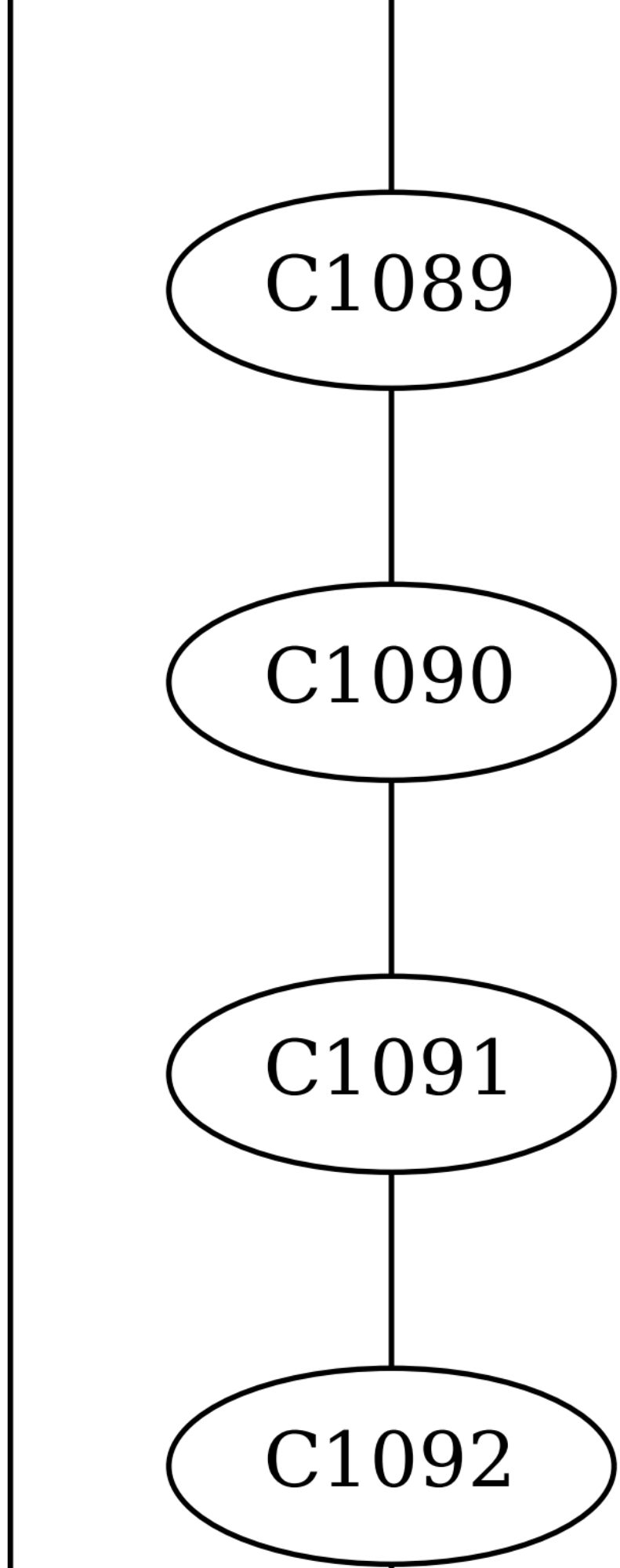
C1089
C1090
C1091
C1092

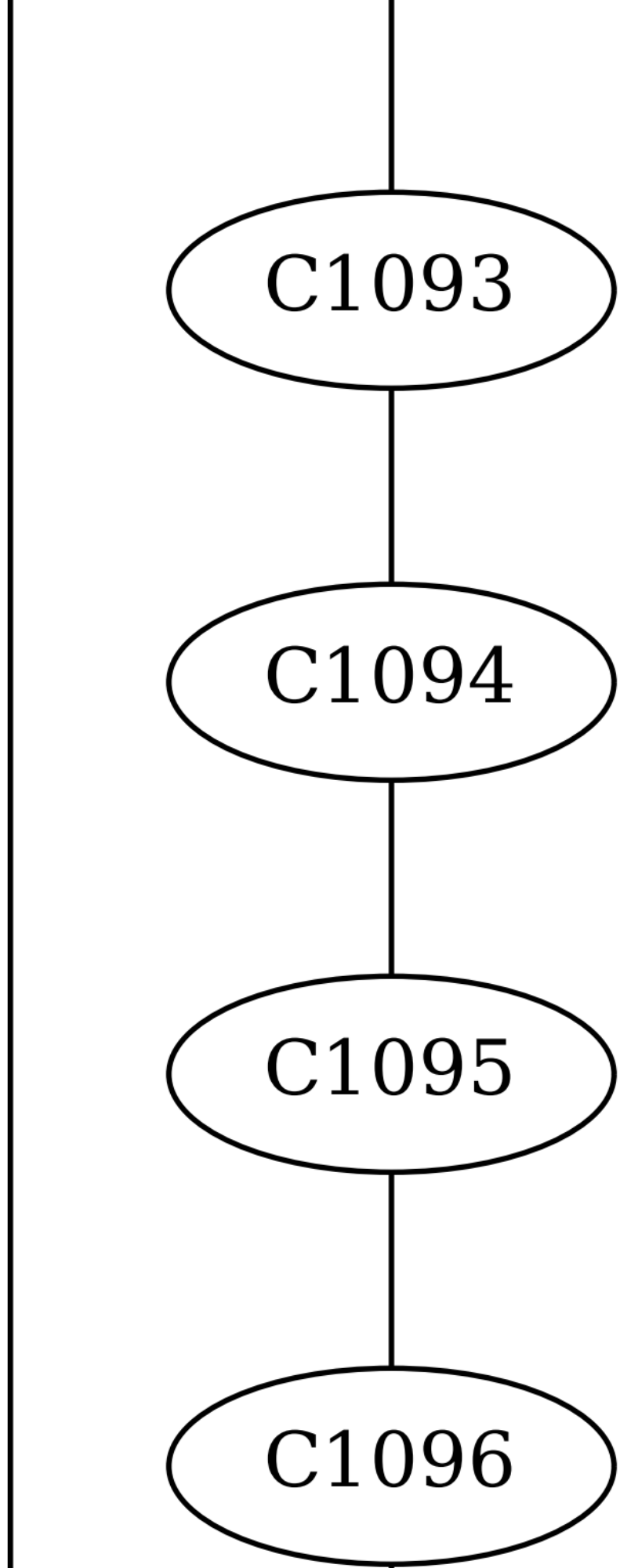
C1093
C1094
C1095
C1096

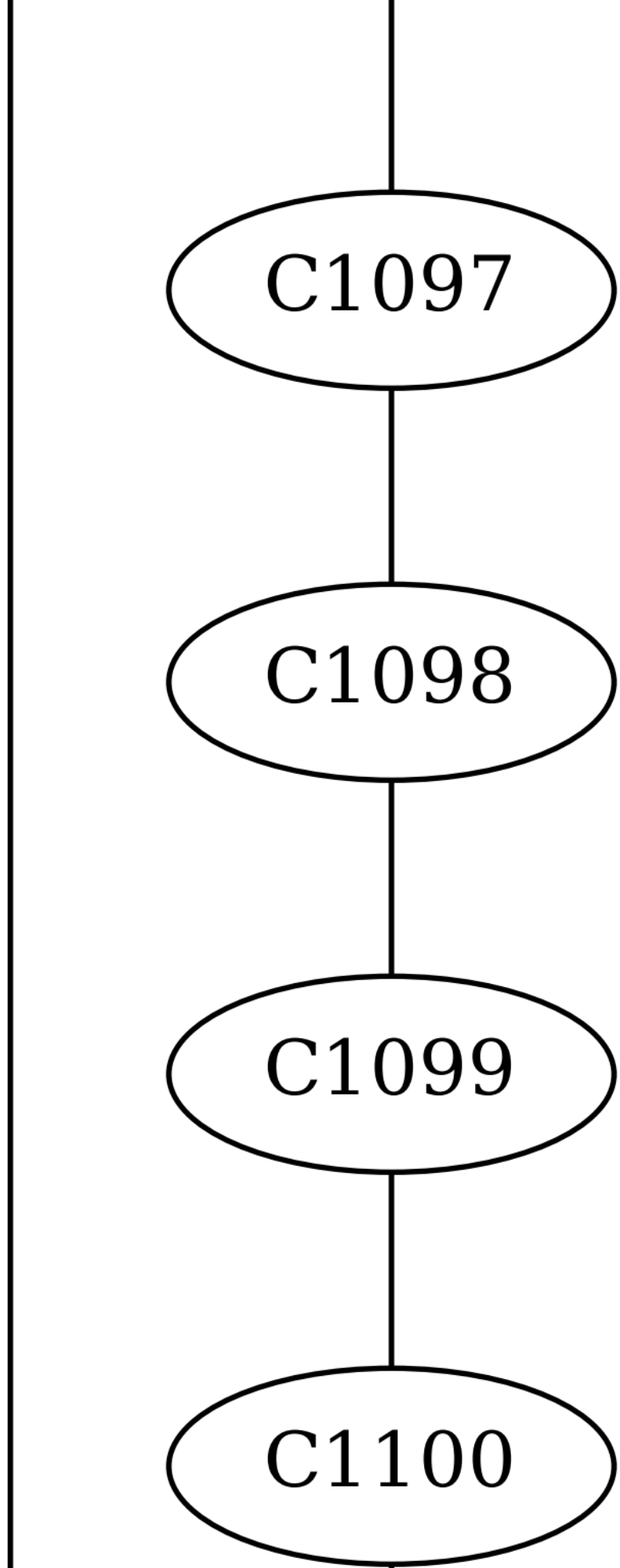
C1097
C1098
C1099
C1100

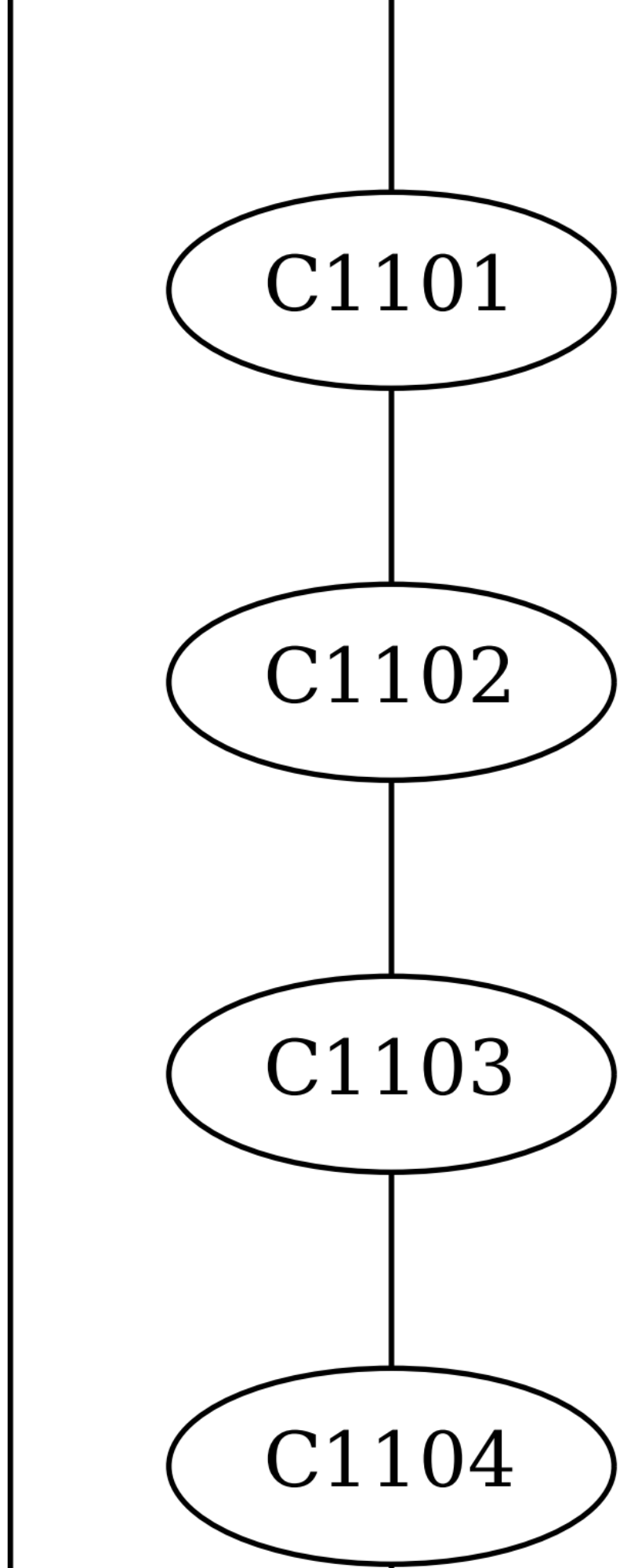
C1101
C1102
C1103
C1104

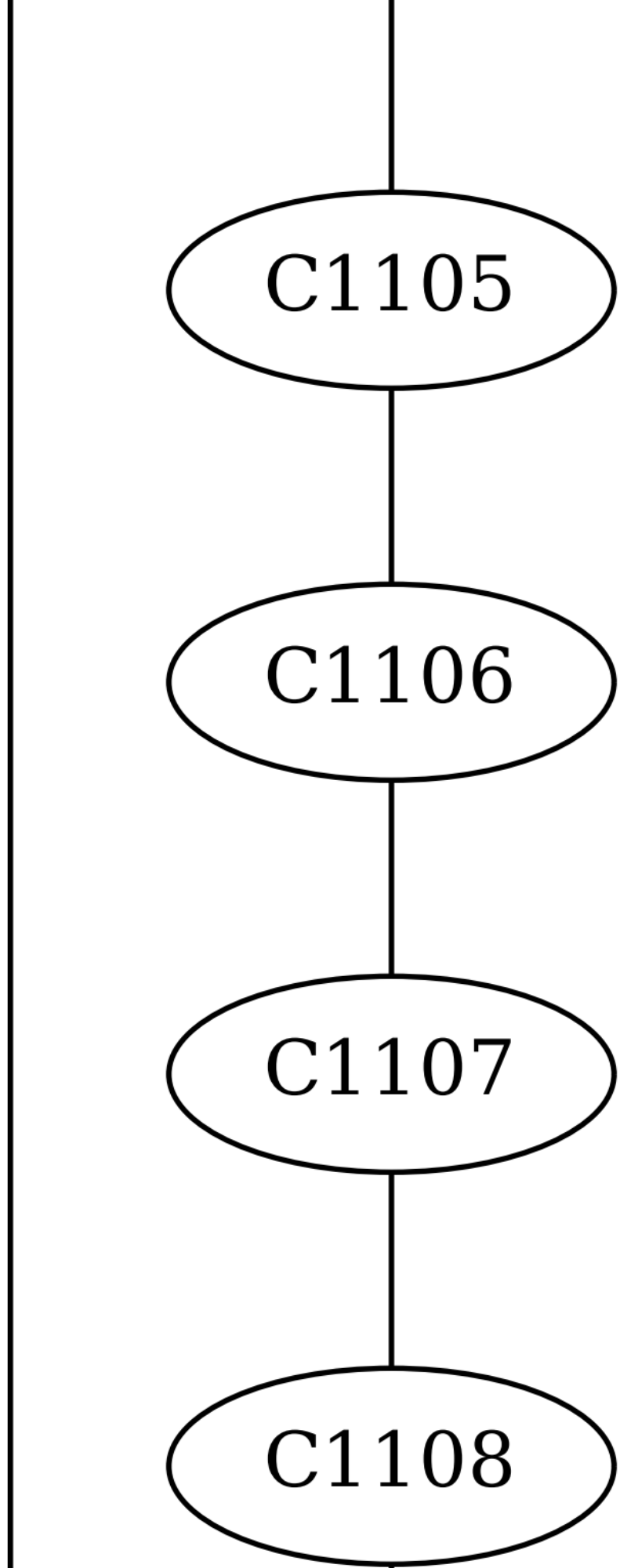
C1105
C1106
C1107
C1108

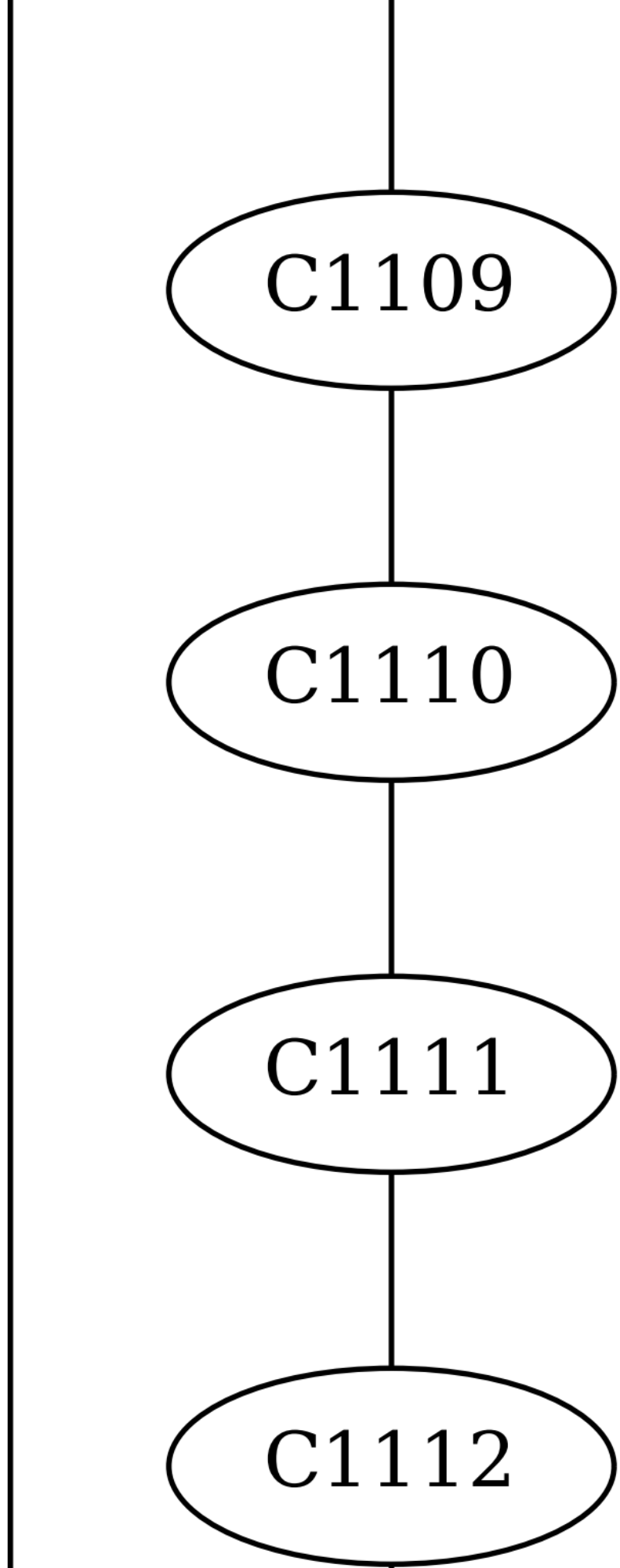
C1109
C1110
C1111
C1112

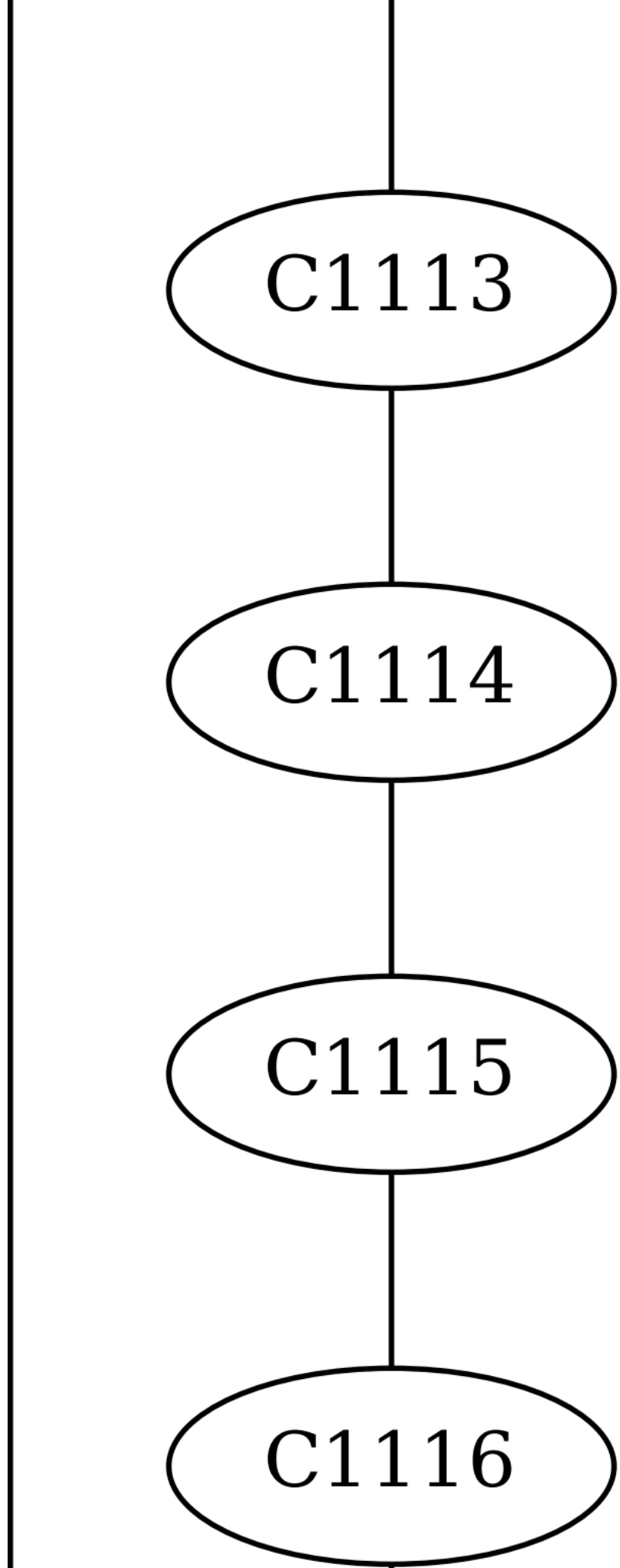
C1113
C1114
C1115
C1116

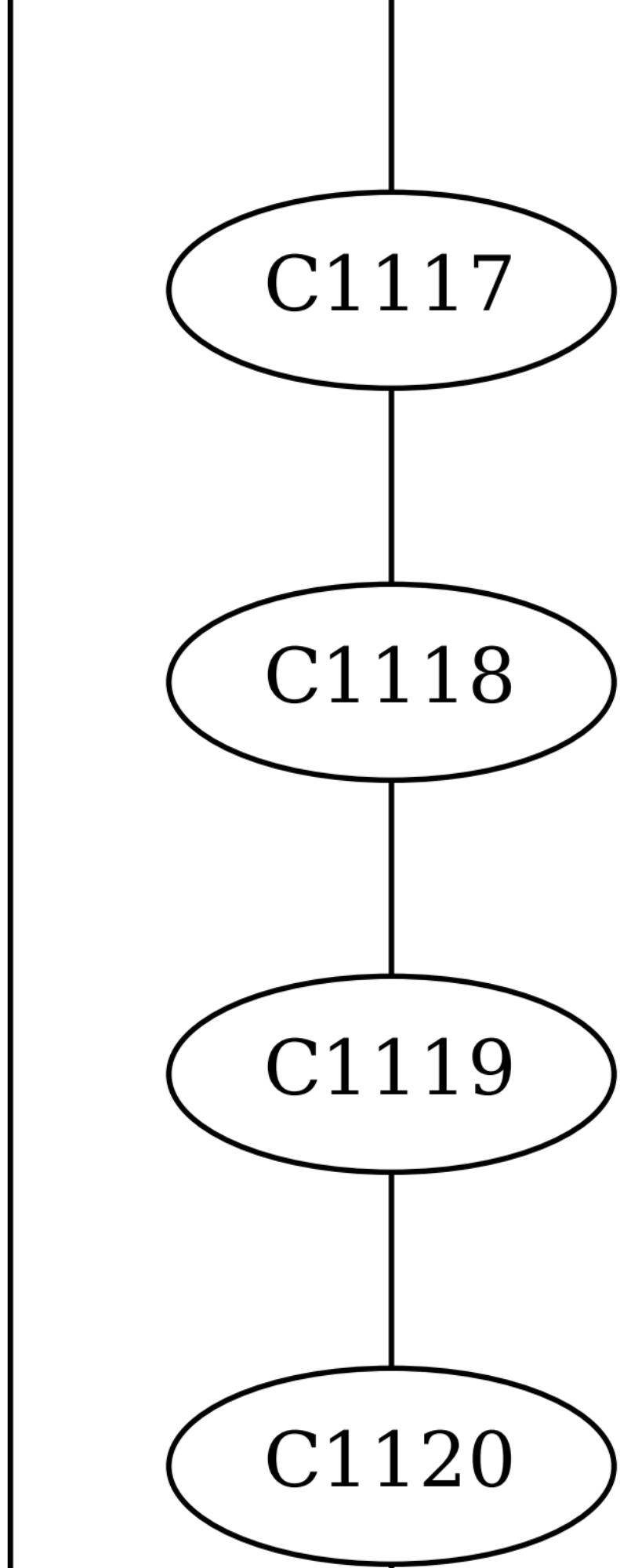
C1117
C1118
C1119
C1120

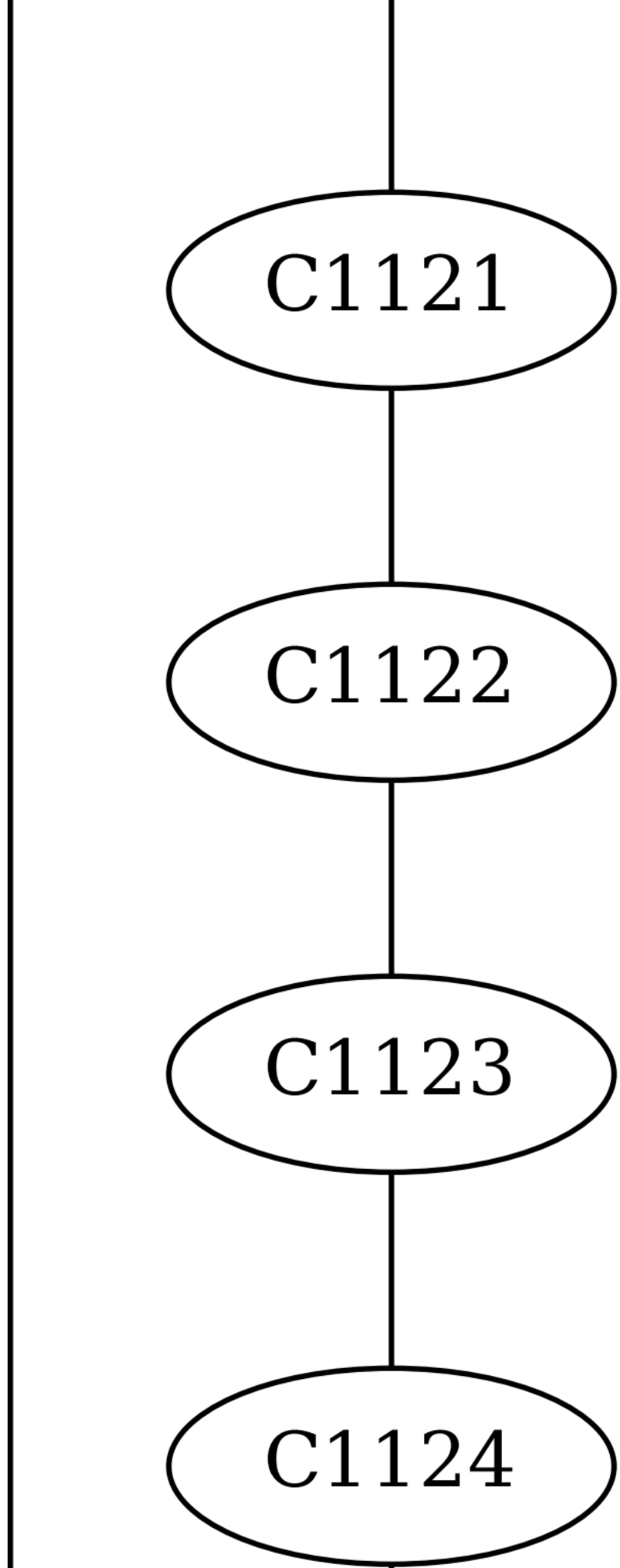
C1121
C1122
C1123
C1124

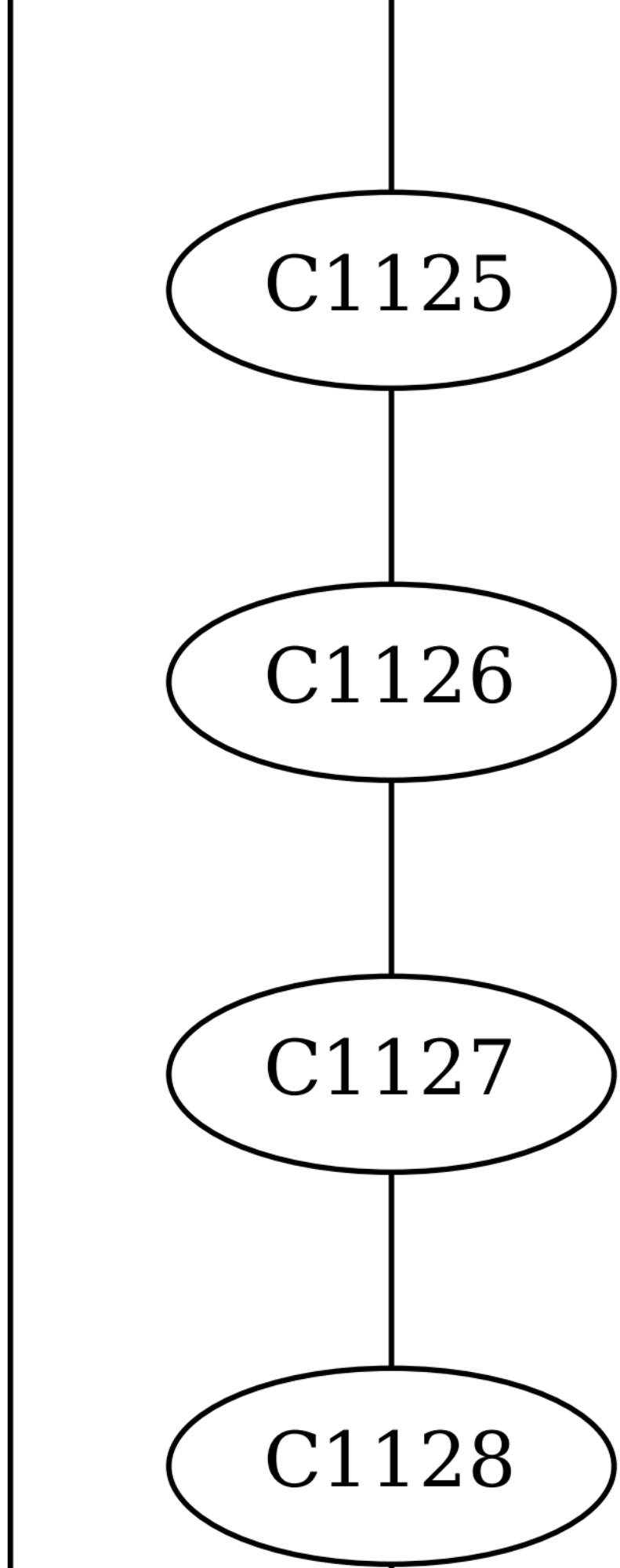
C1125
C1126
C1127
C1128

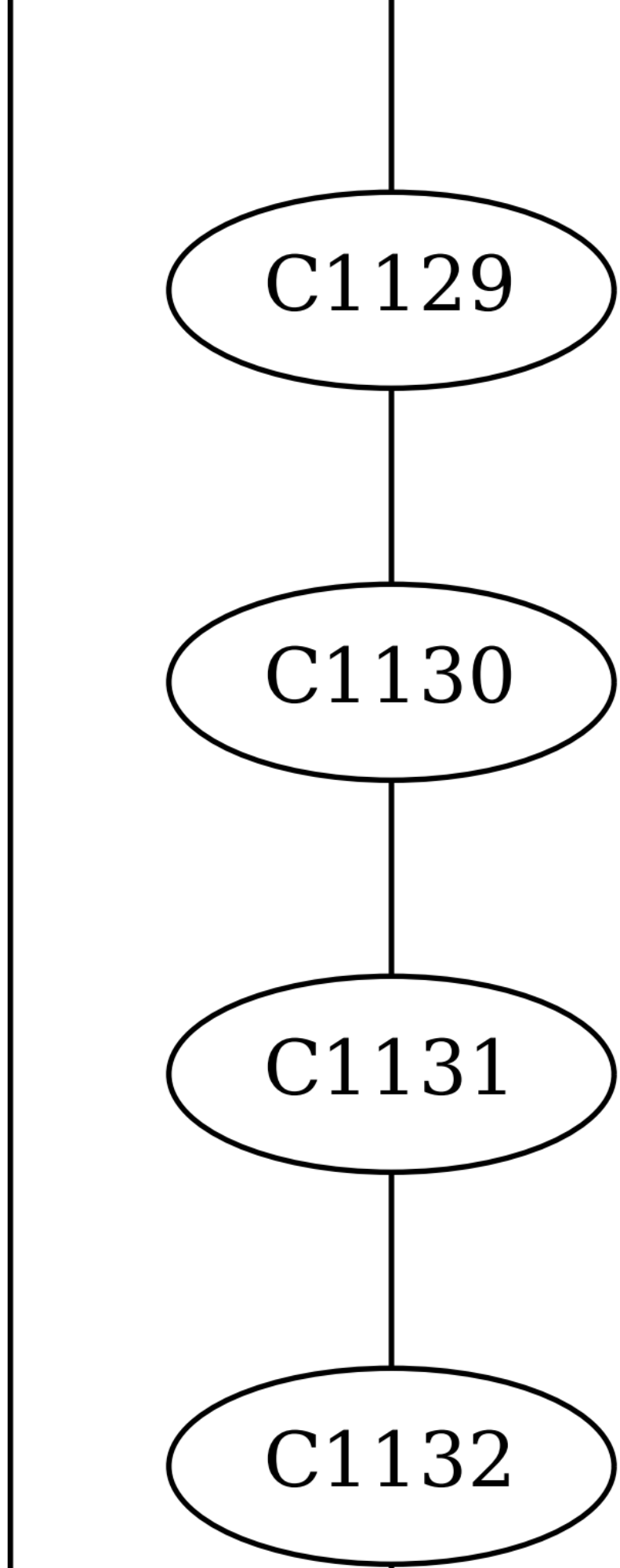
C1129
C1130
C1131
C1132

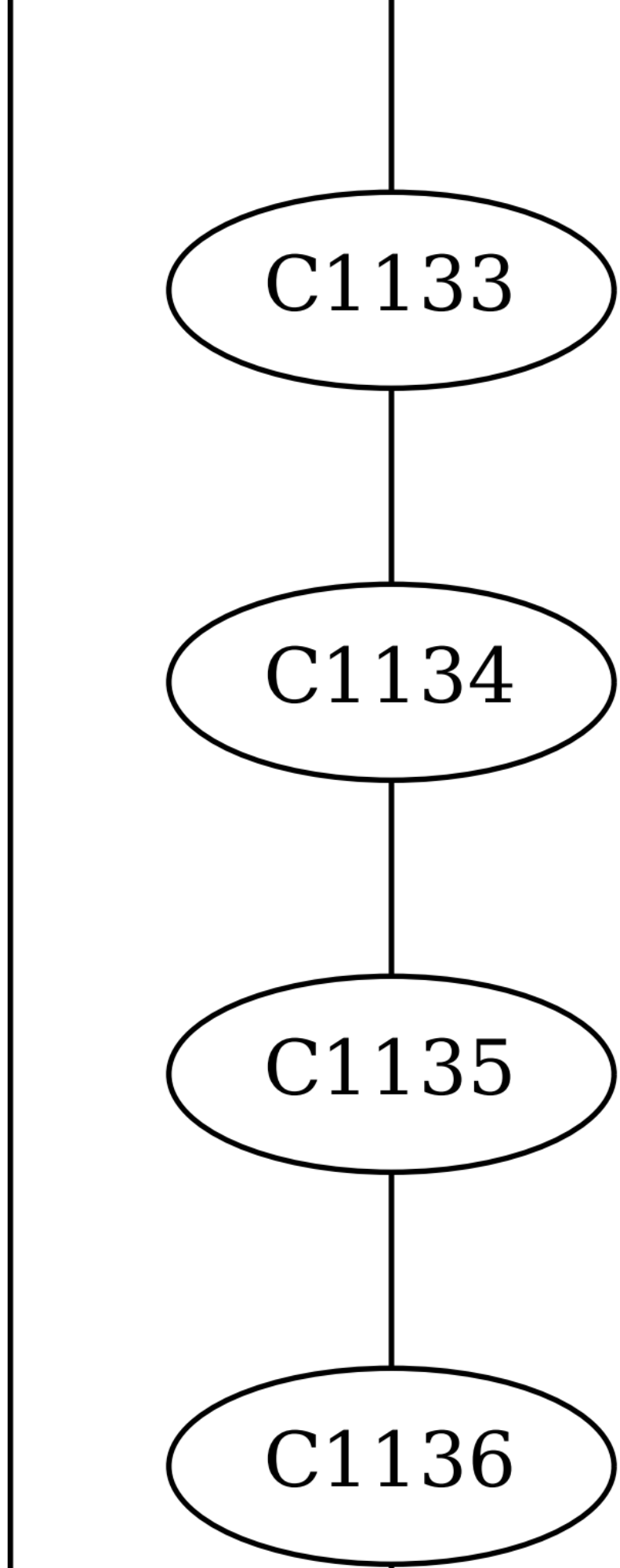
C1133
C1134
C1135
C1136

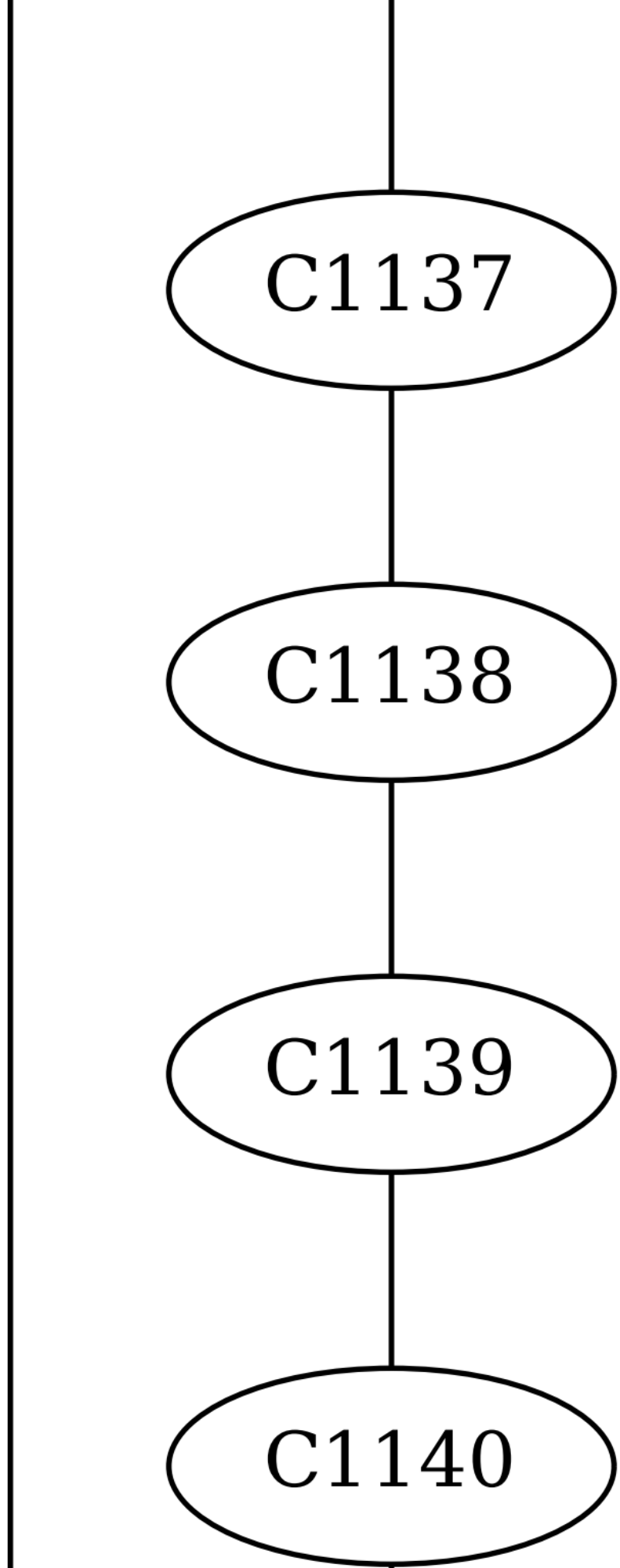
C1137
C1138
C1139
C1140

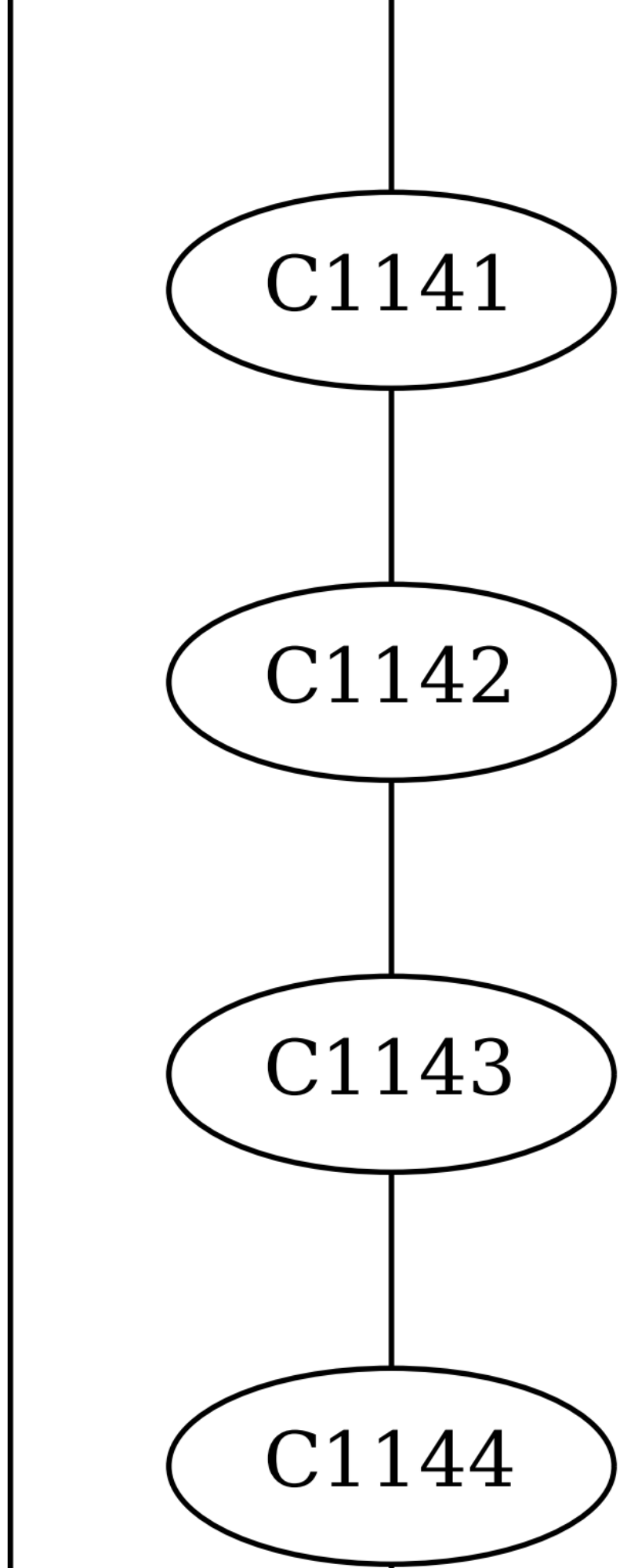
C1141
C1142
C1143
C1144

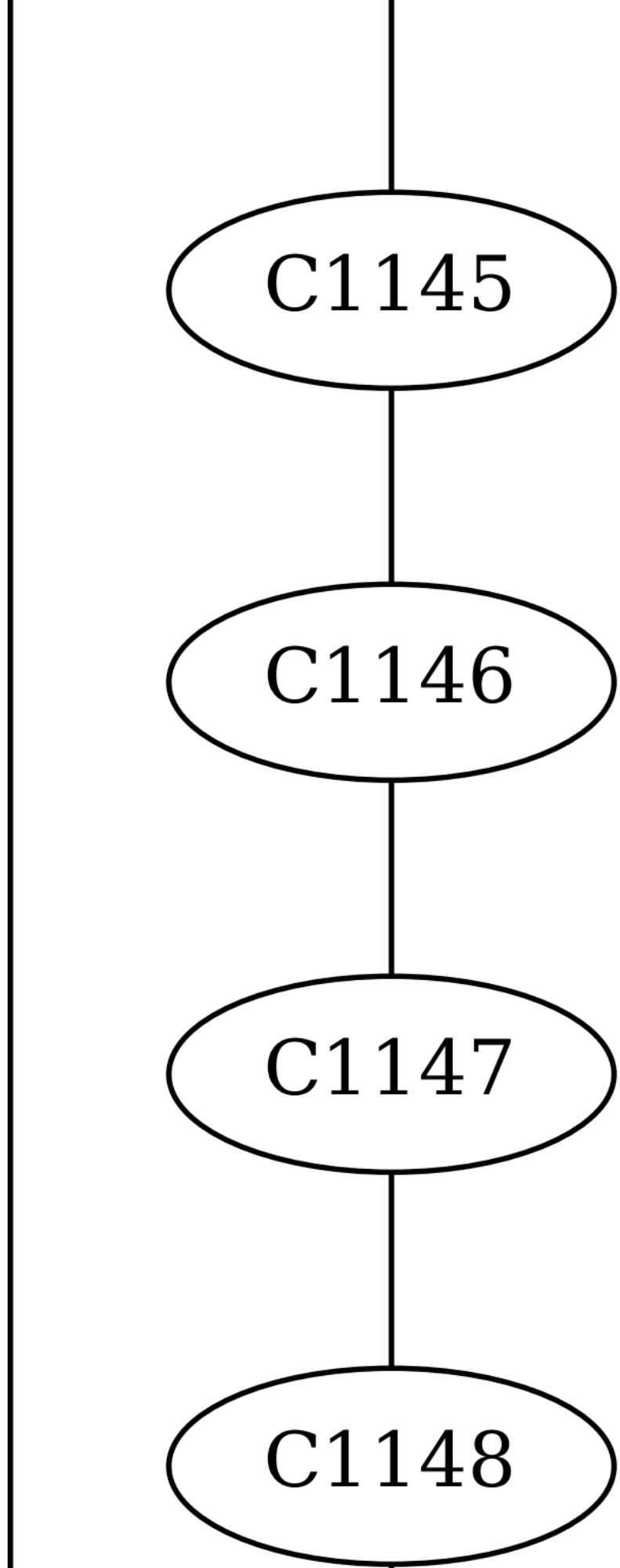
C1145
C1146
C1147
C1148

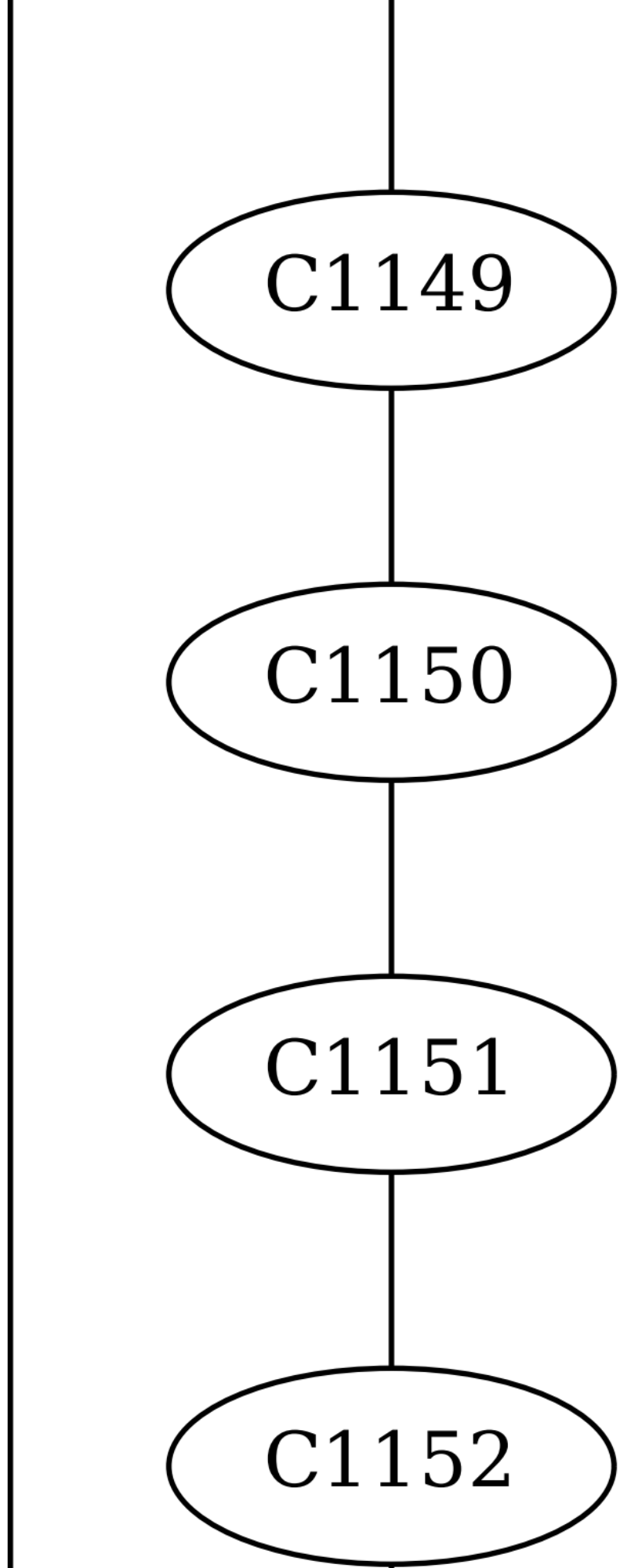
C1149
C1150
C1151
C1152

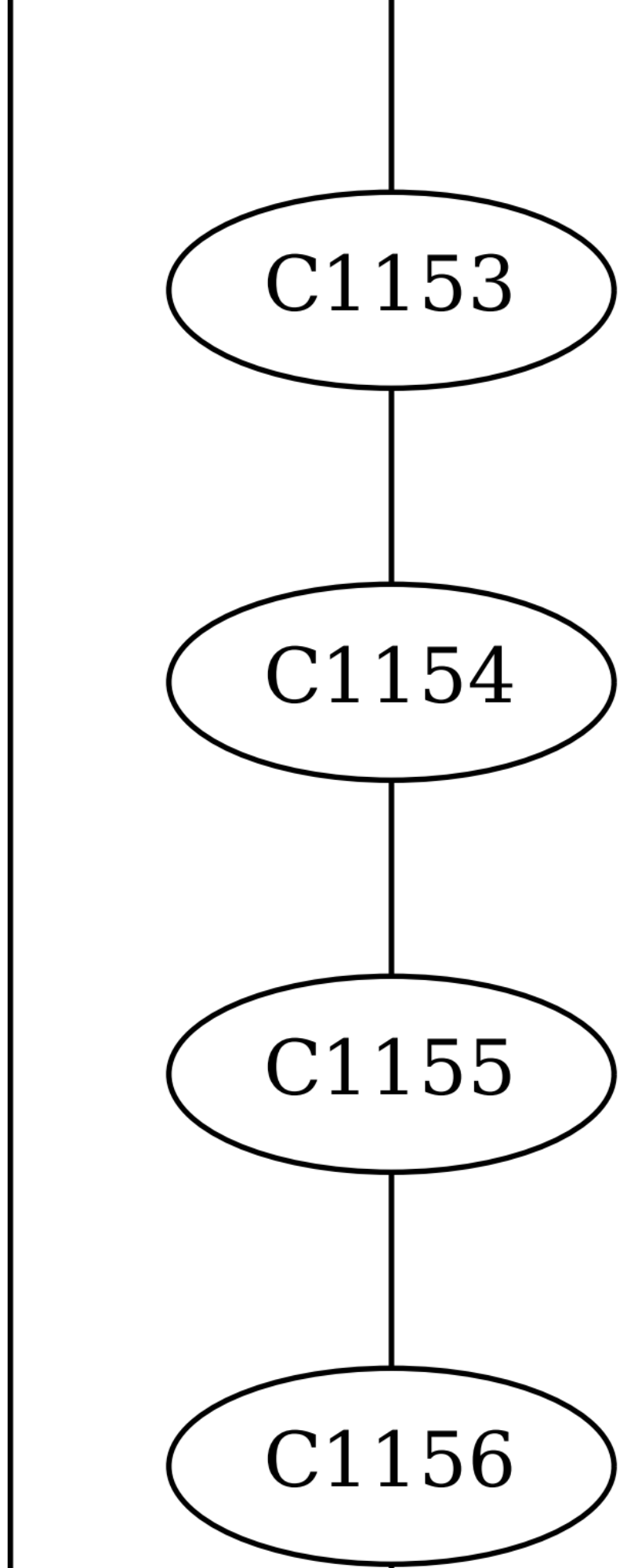
C1153
C1154
C1155
C1156

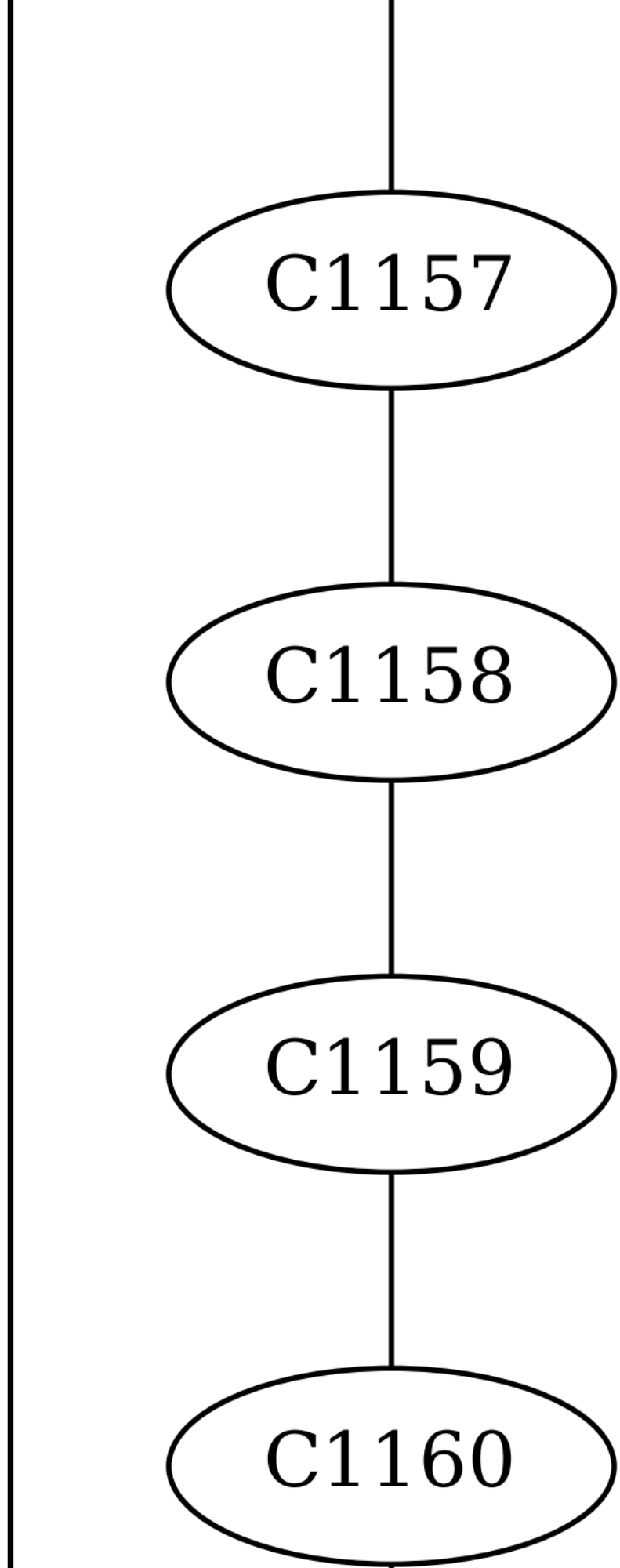
C1157
C1158
C1159
C1160

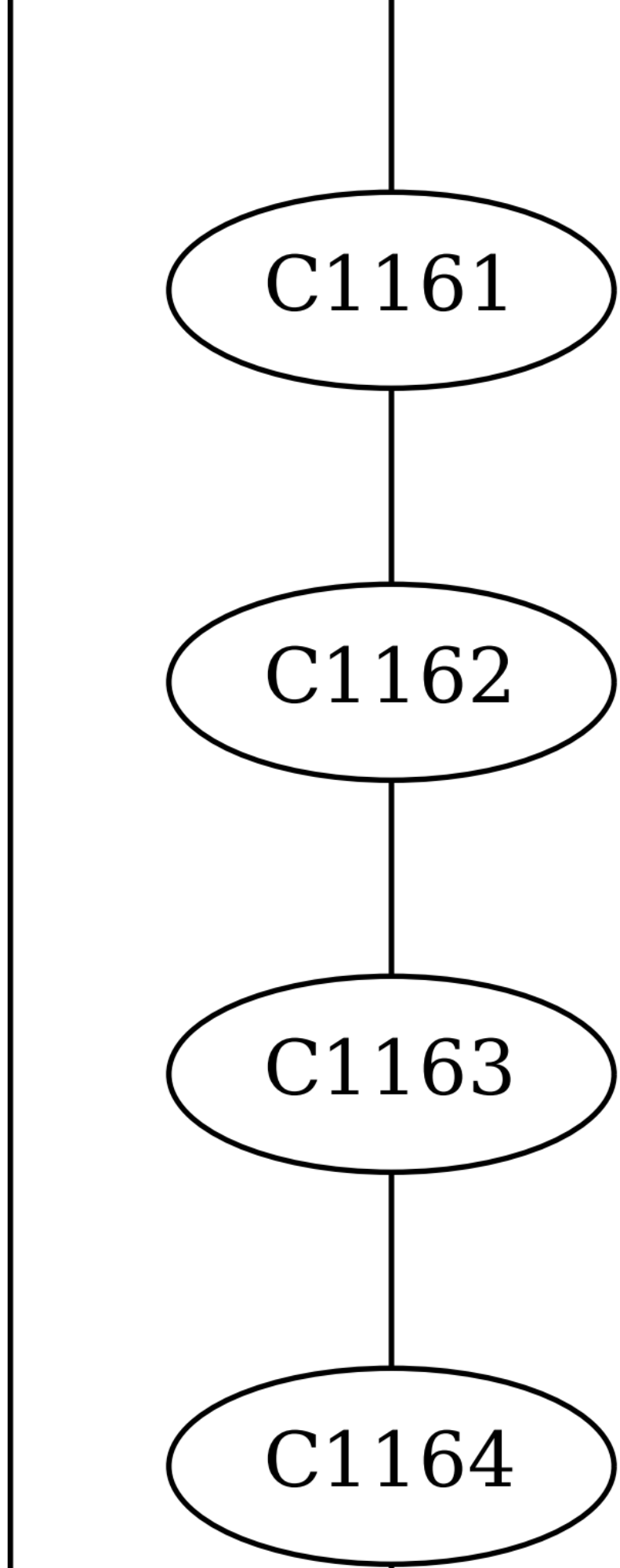
C1161
C1162
C1163
C1164

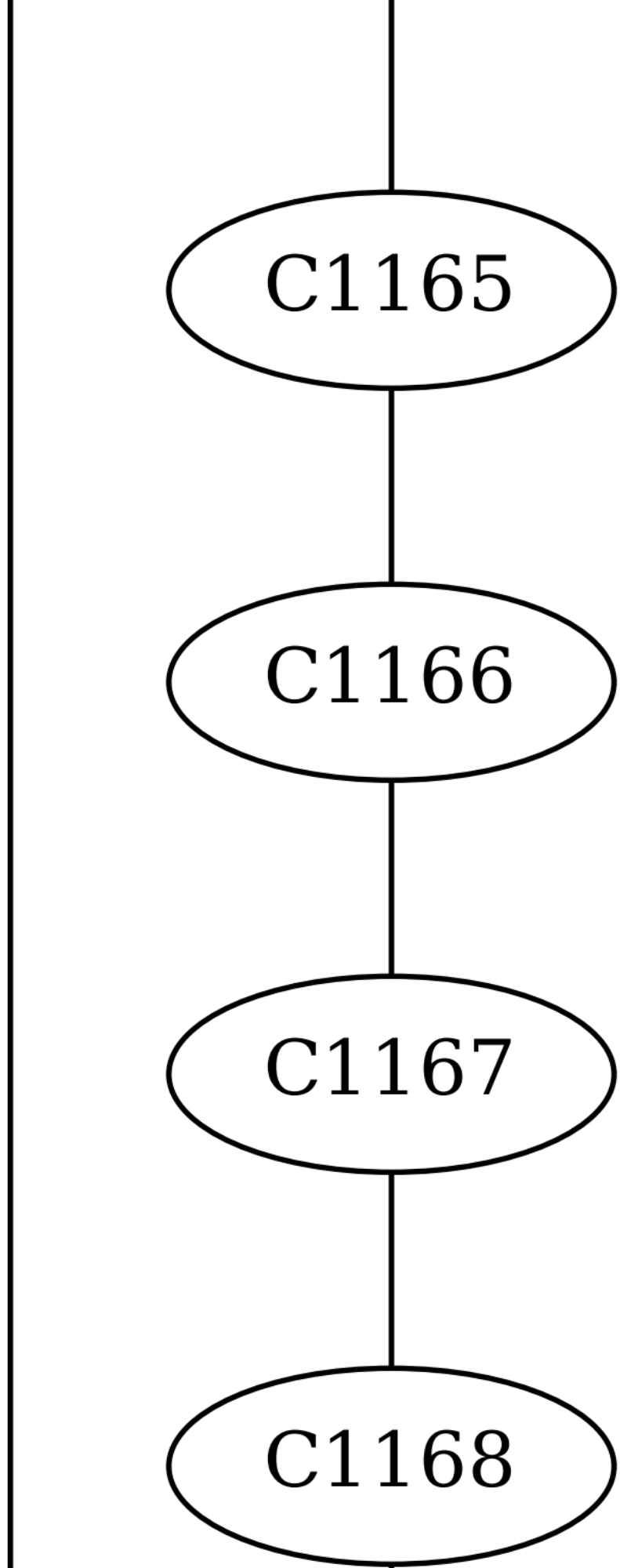
C1165
C1166
C1167
C1168

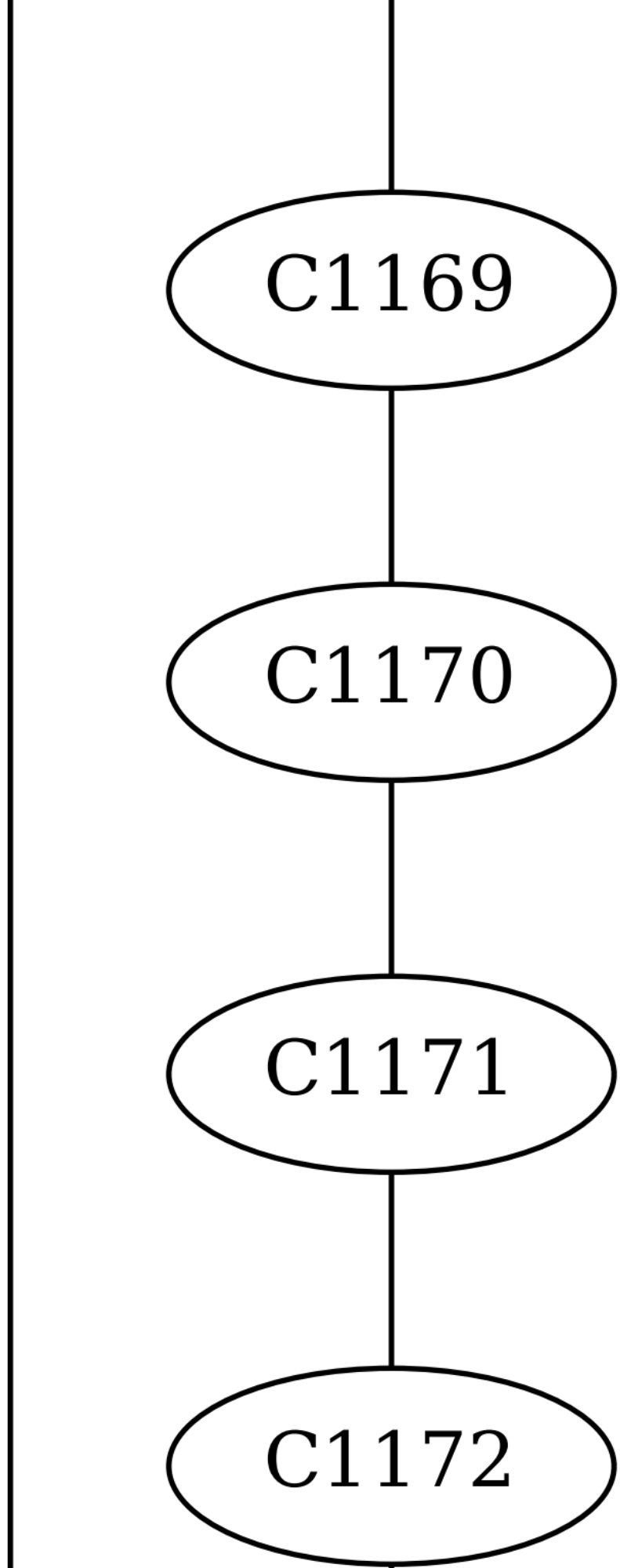
C1169
C1170
C1171
C1172

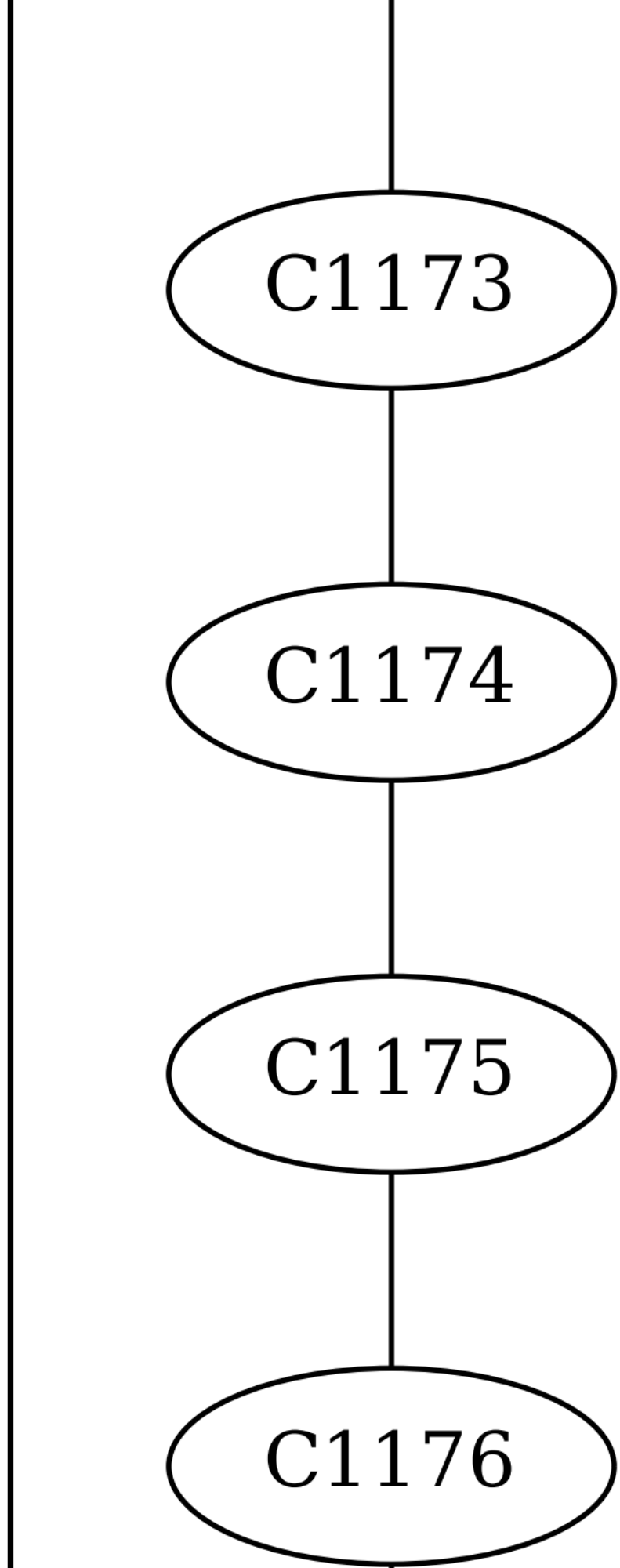
C1173
C1174
C1175
C1176

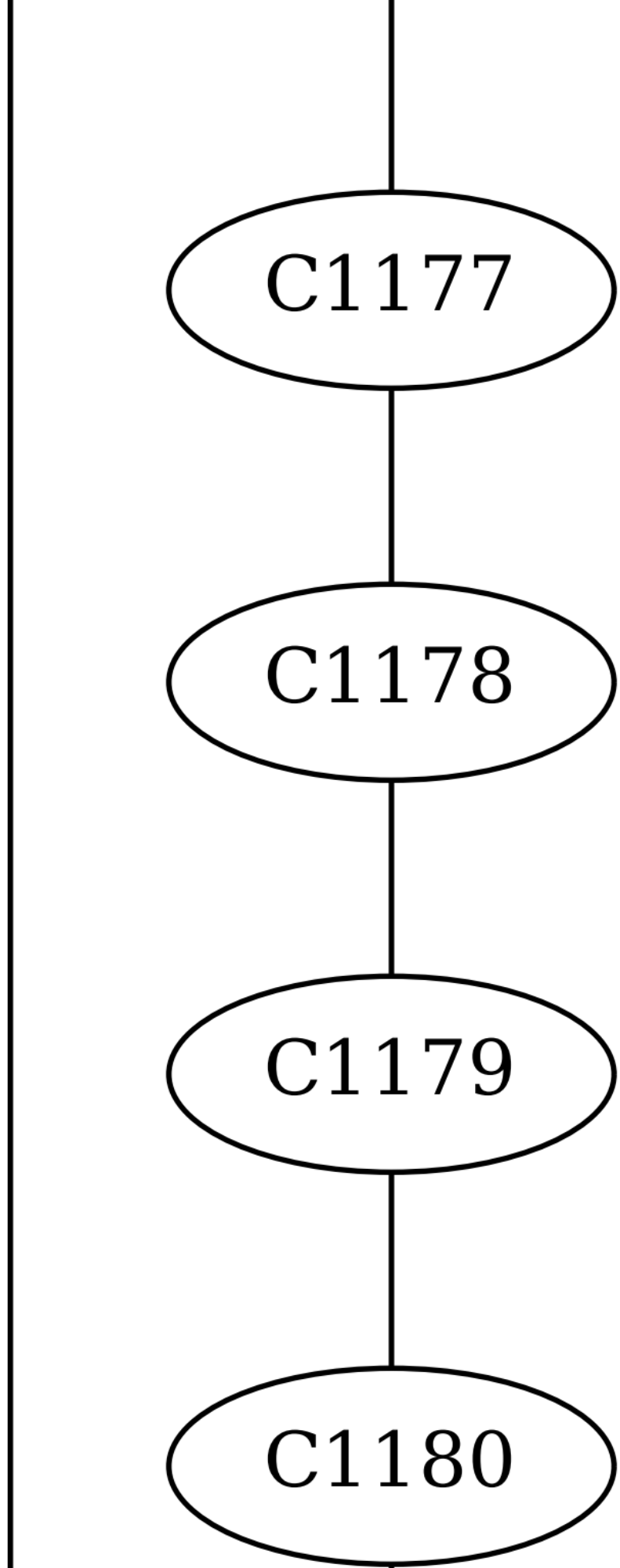
C1177
C1178
C1179
C1180

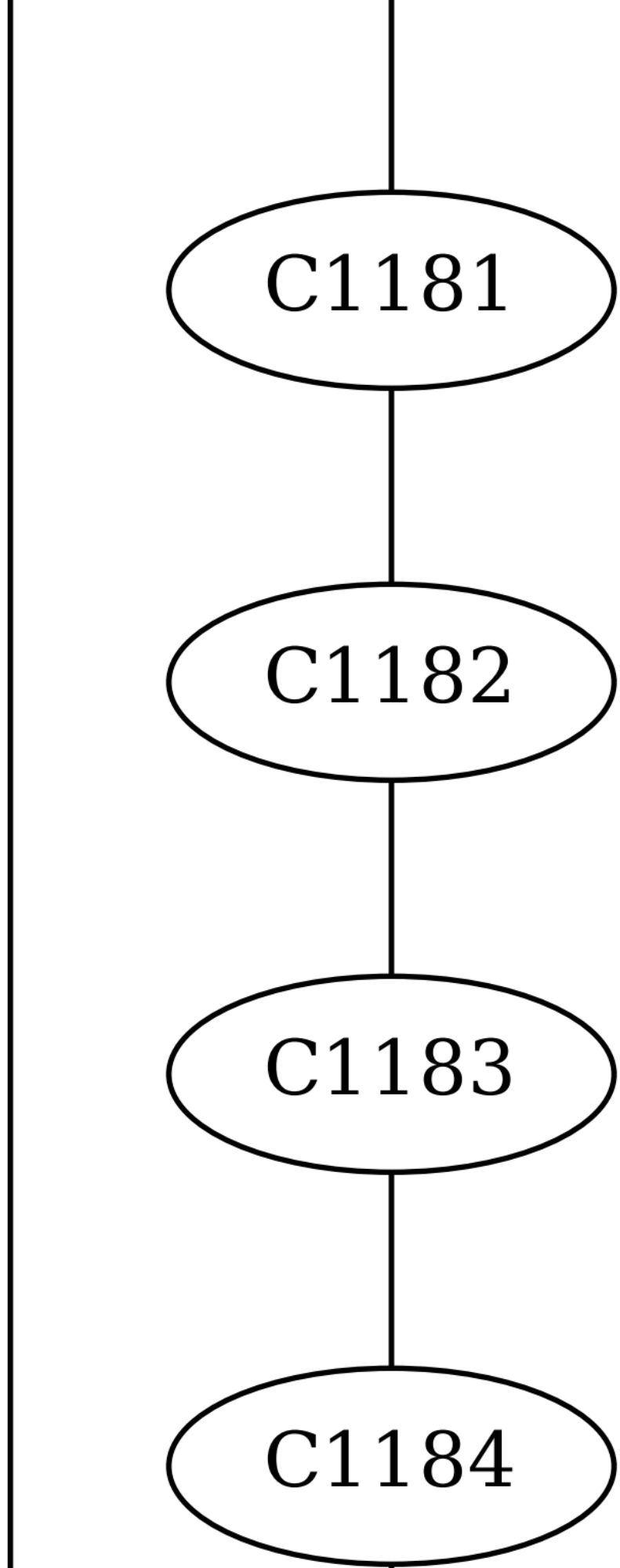
C1181
C1182
C1183
C1184

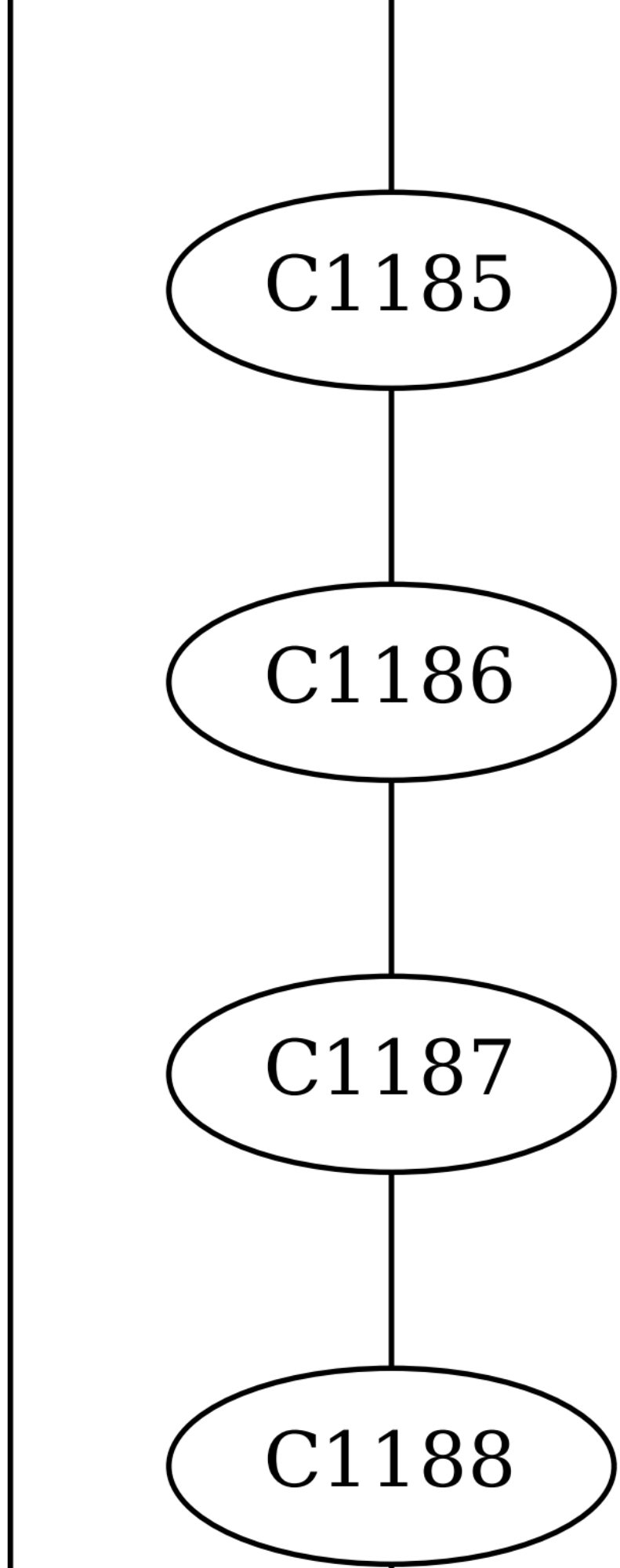
C1185
C1186
C1187
C1188

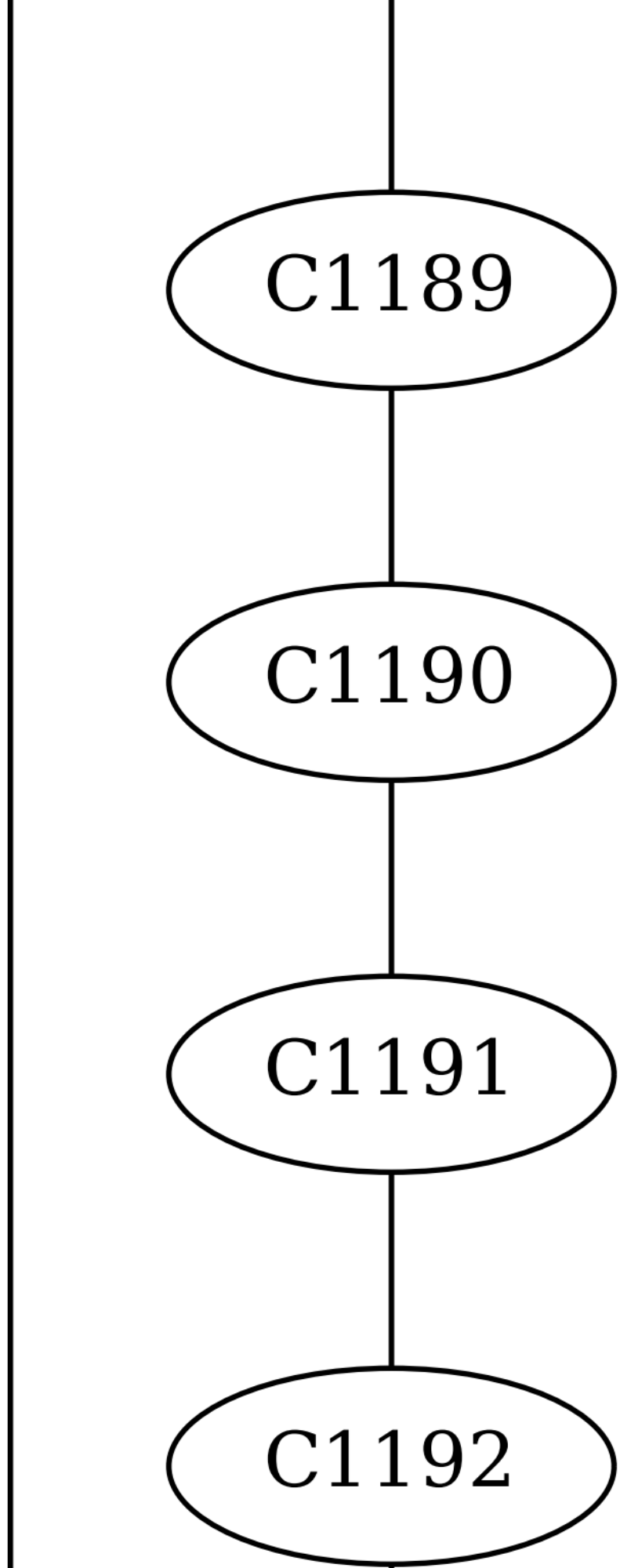
C1189
C1190
C1191
C1192

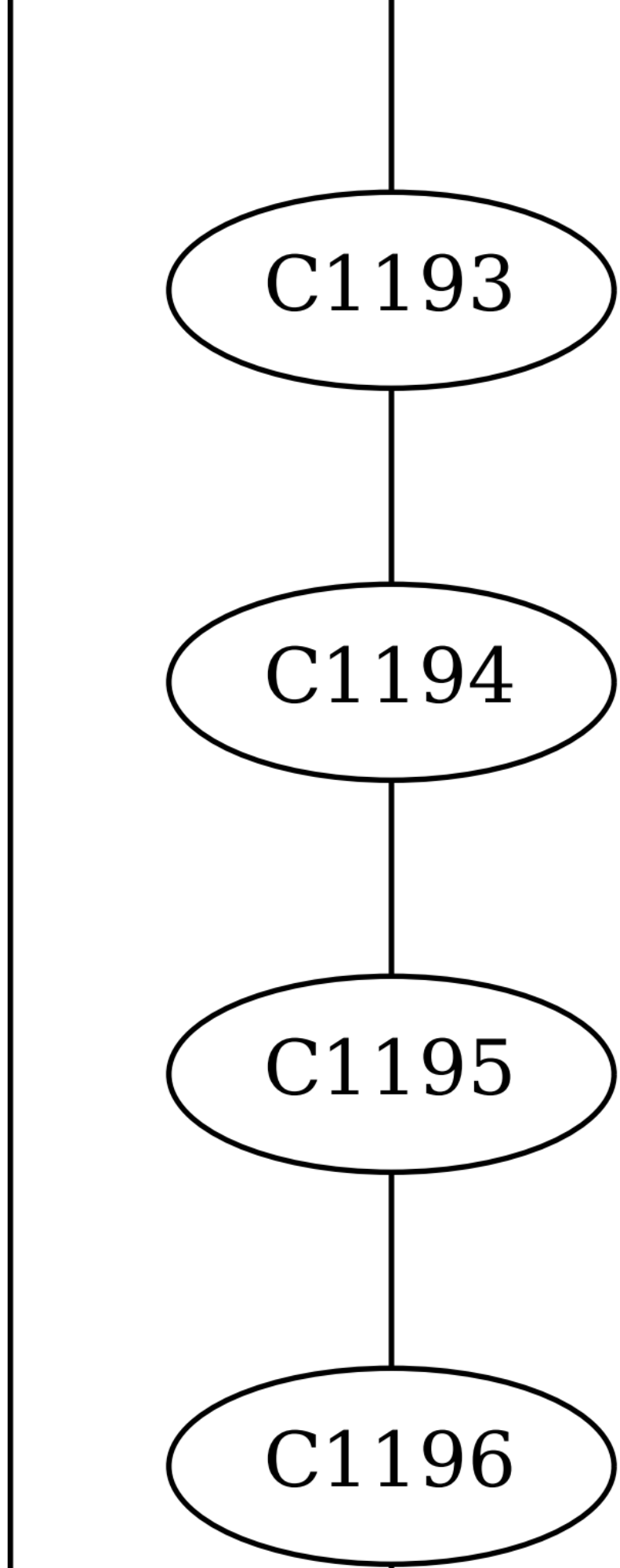
C1193
C1194
C1195
C1196

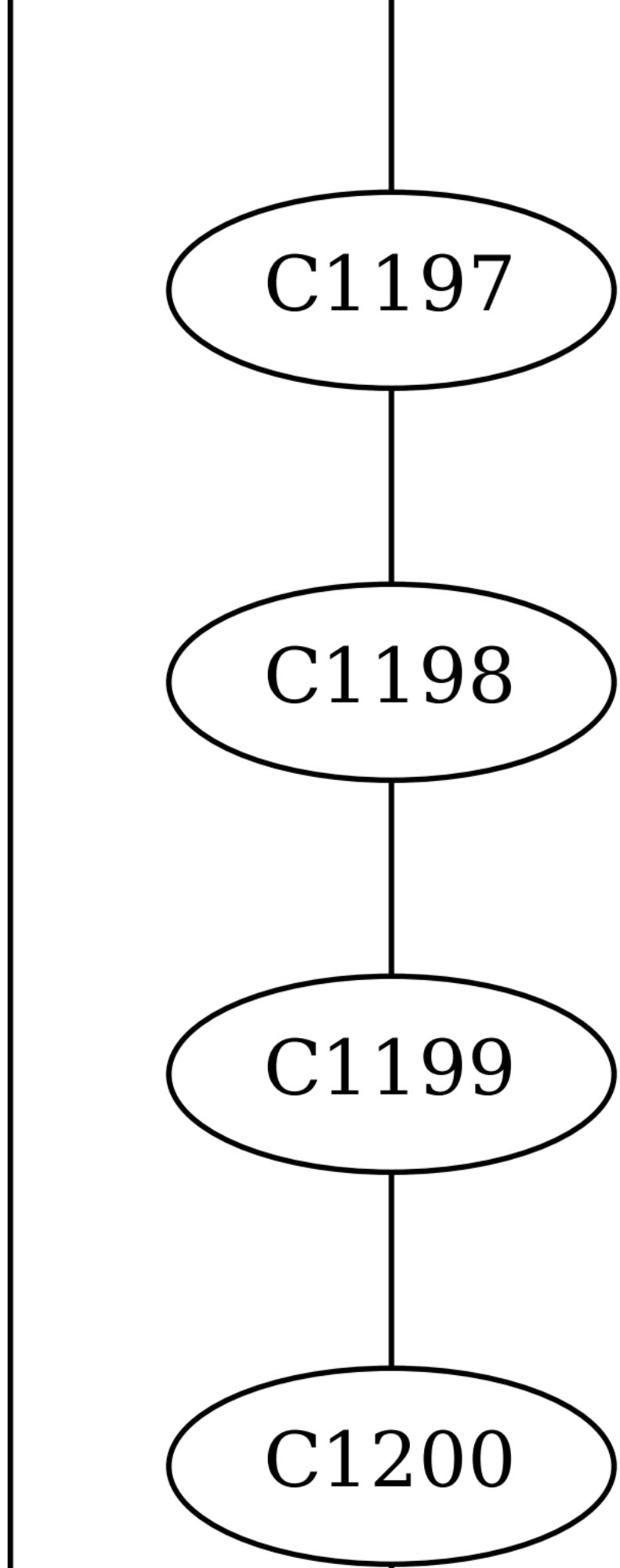
C1197
C1198
C1199
C1200

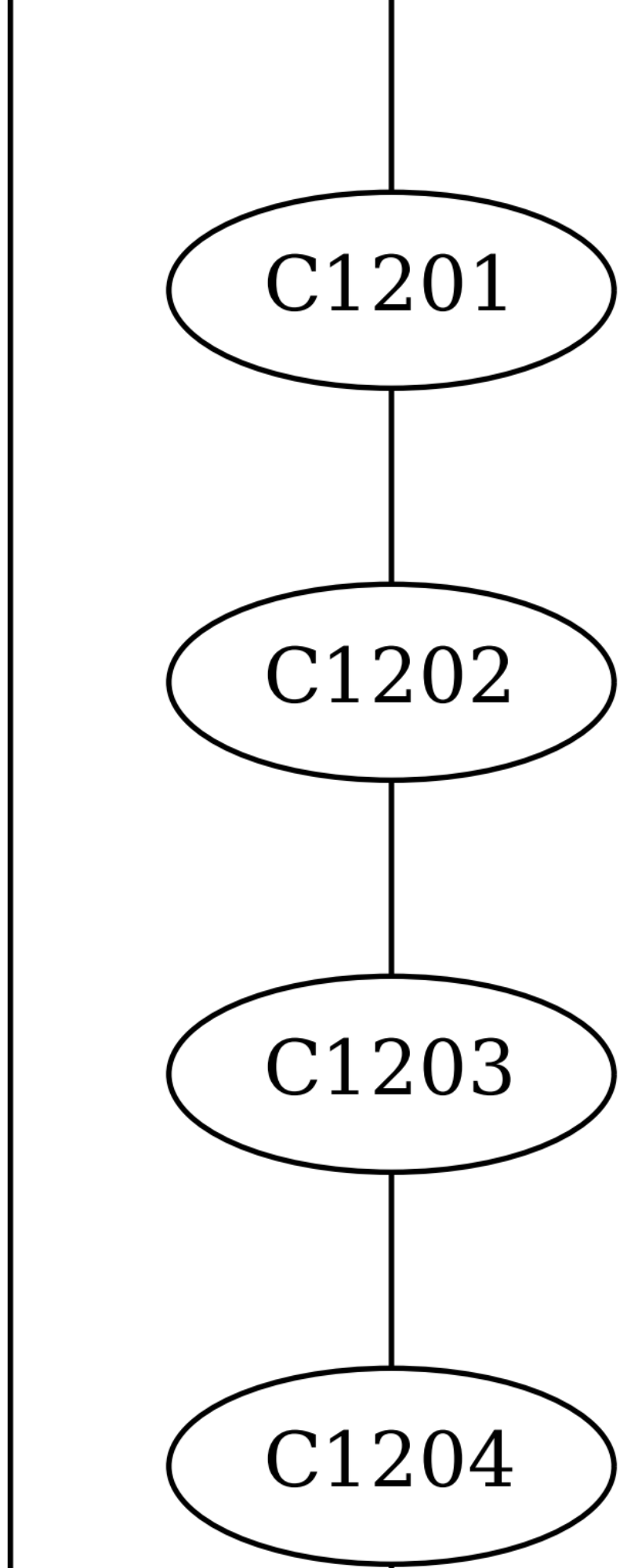
C1201
C1202
C1203
C1204

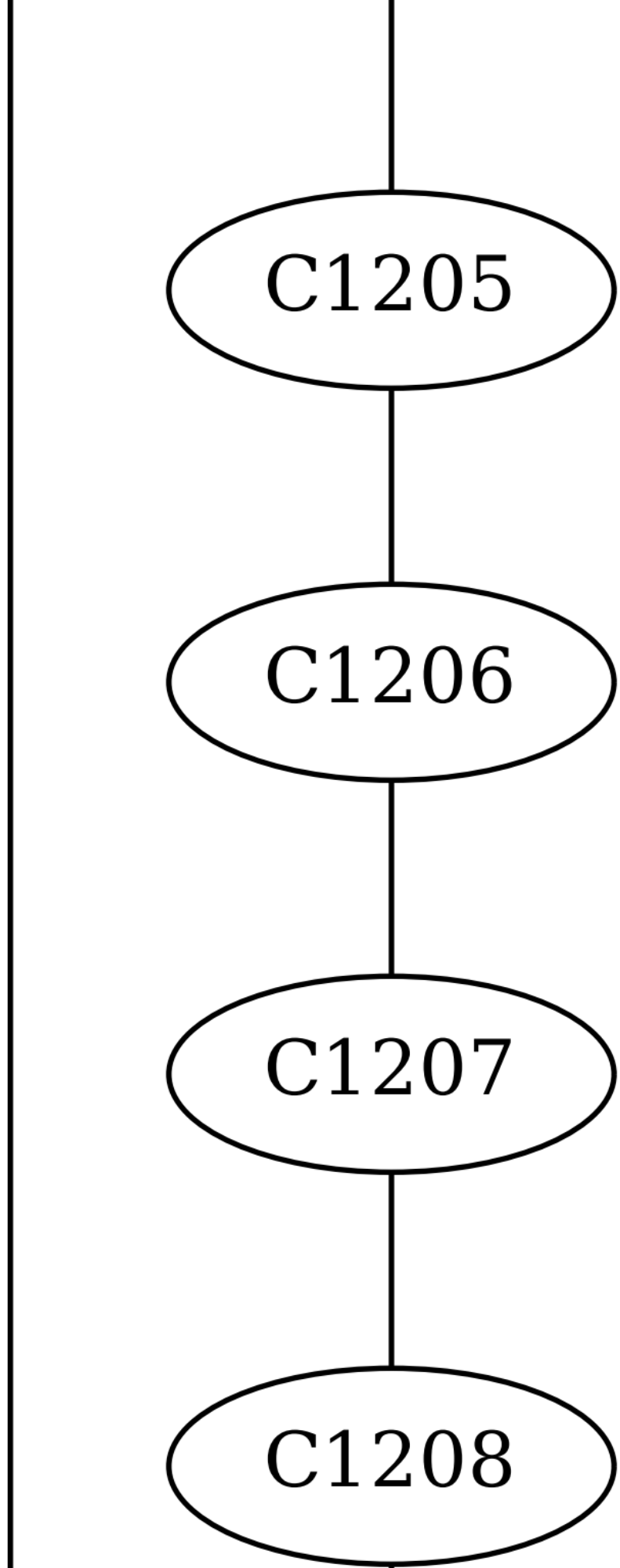
C1205
C1206
C1207
C1208

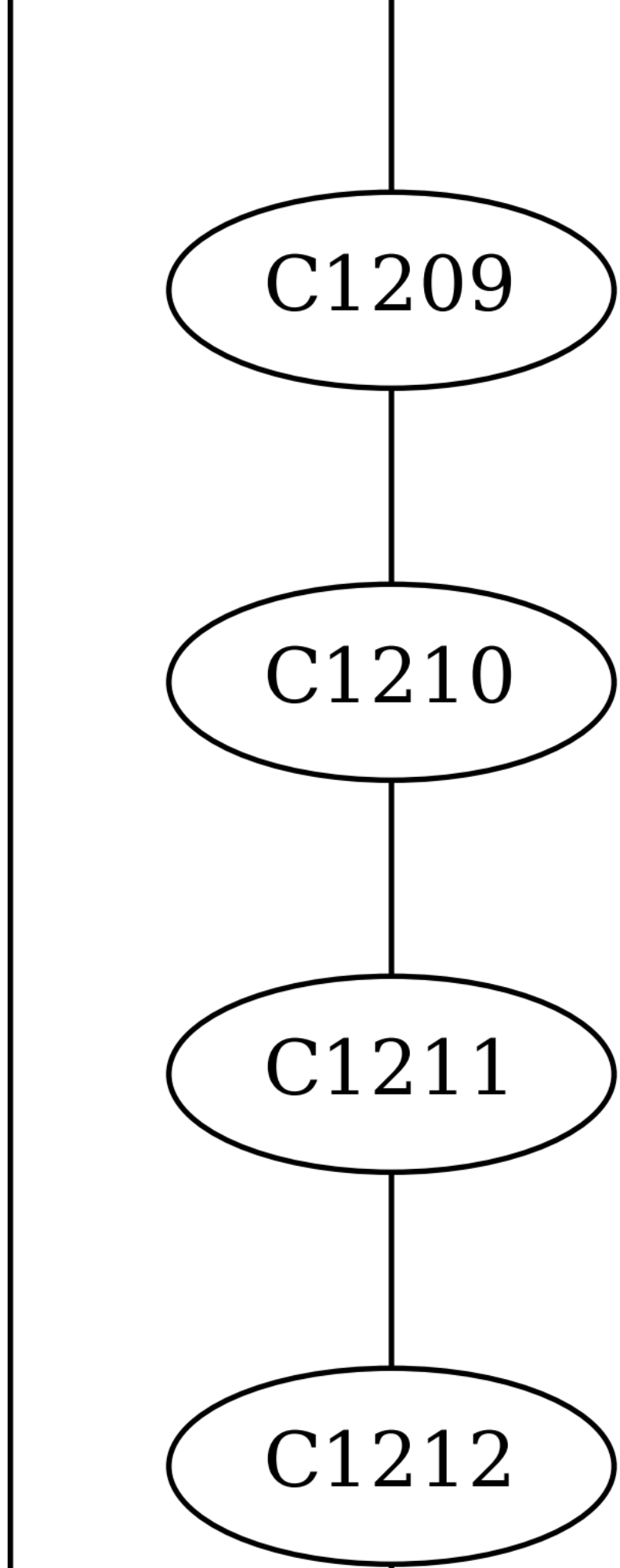
C1209
C1210
C1211
C1212

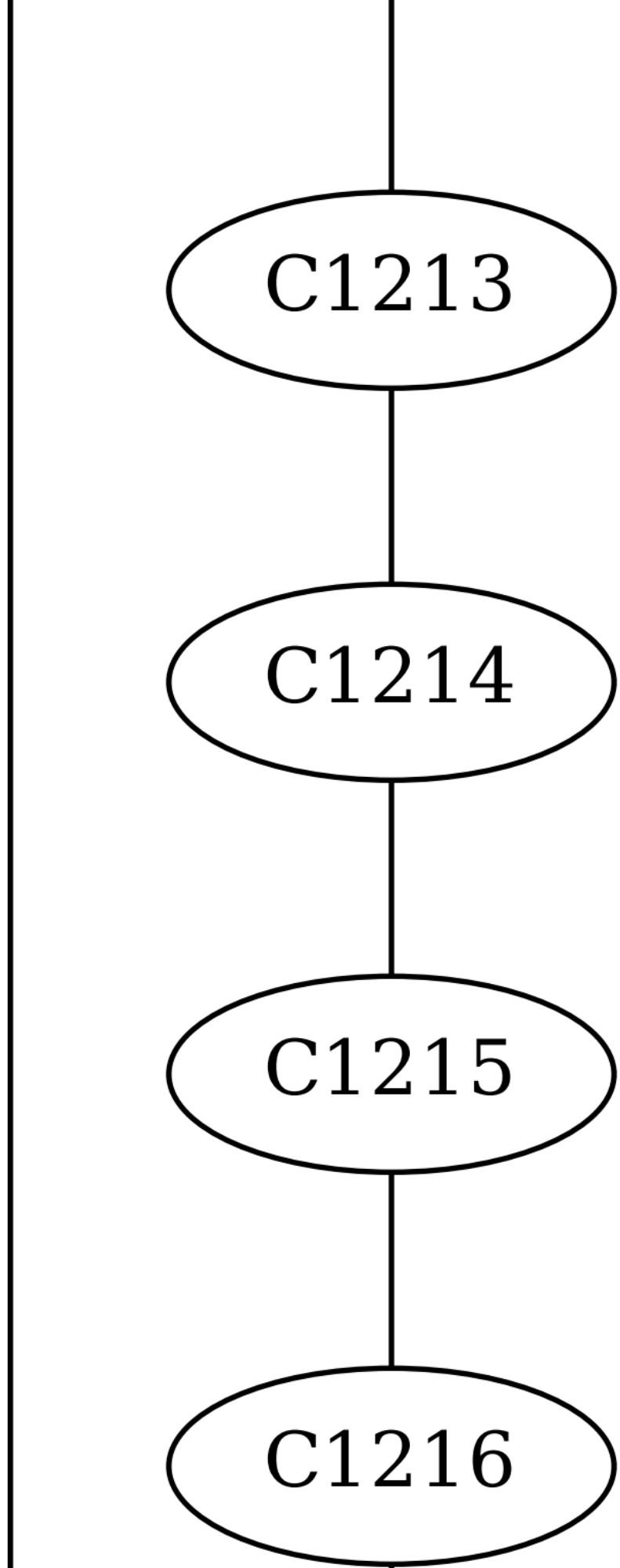
C1213
C1214
C1215
C1216

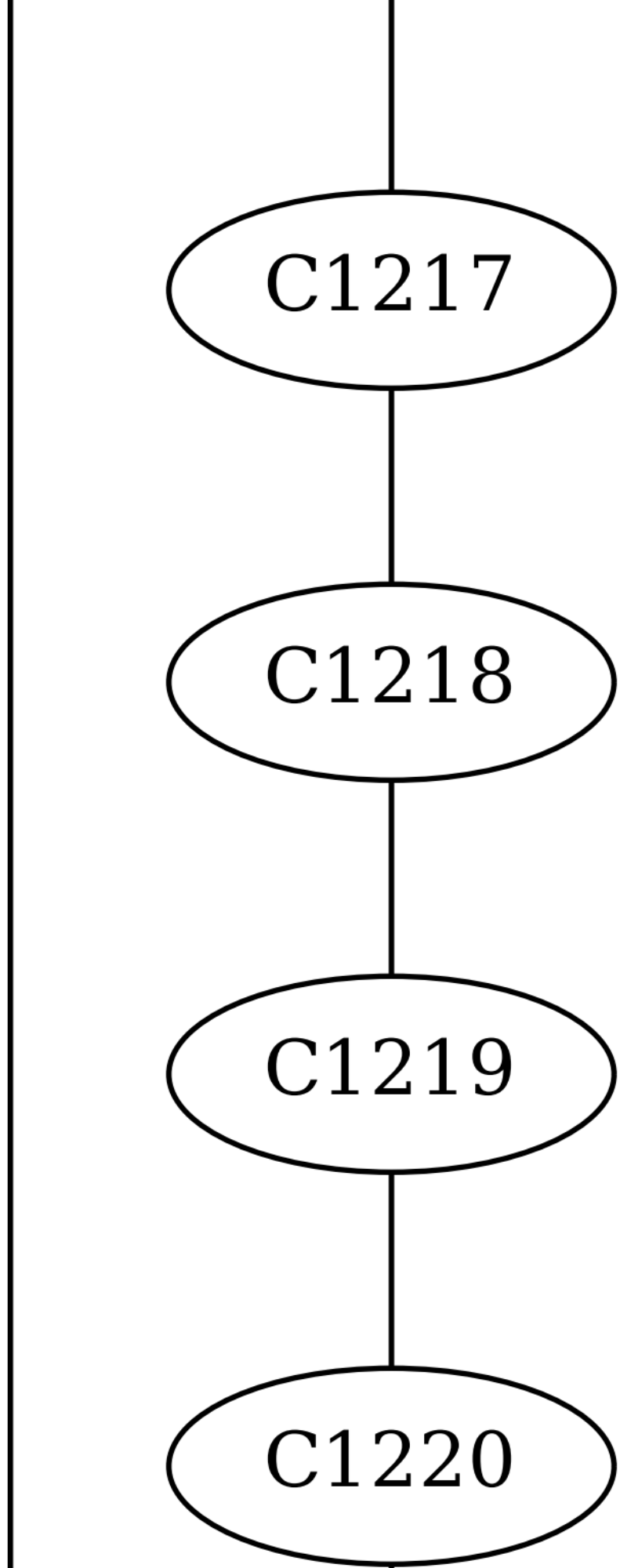
C1217
C1218
C1219
C1220

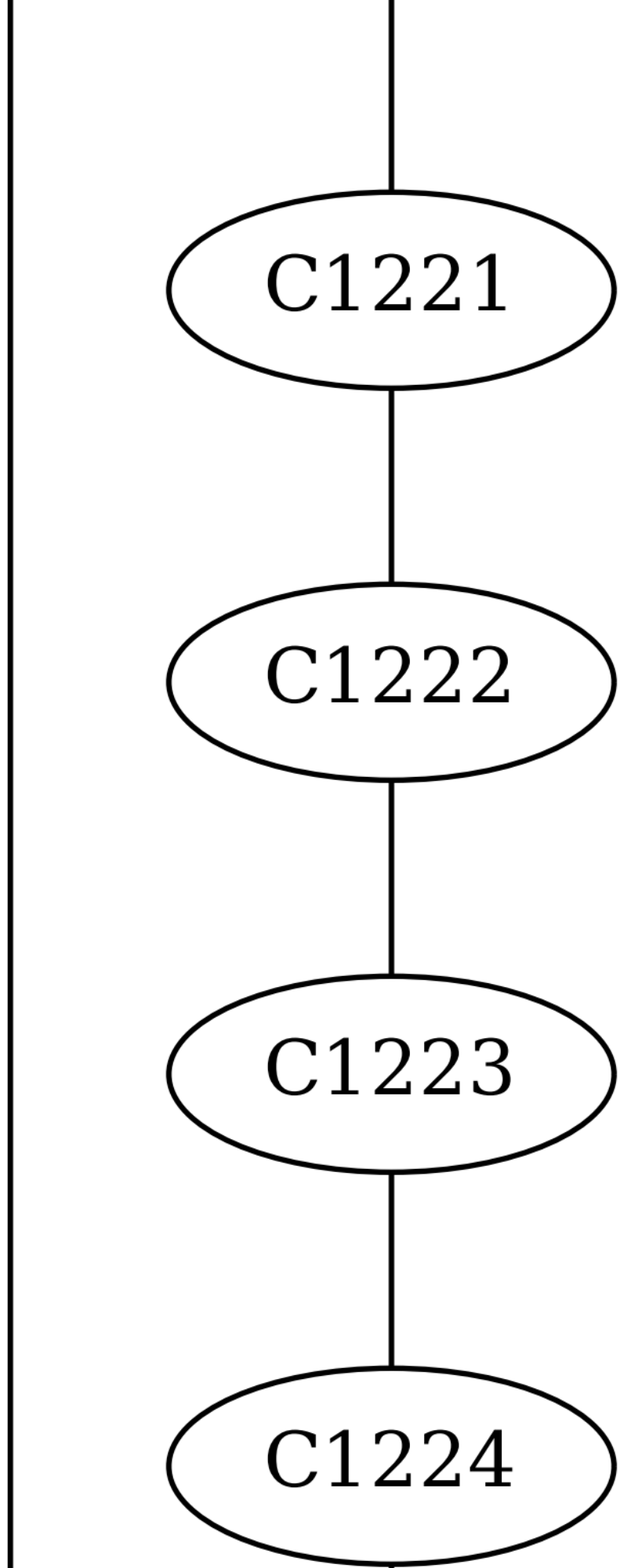
C1221
C1222
C1223
C1224

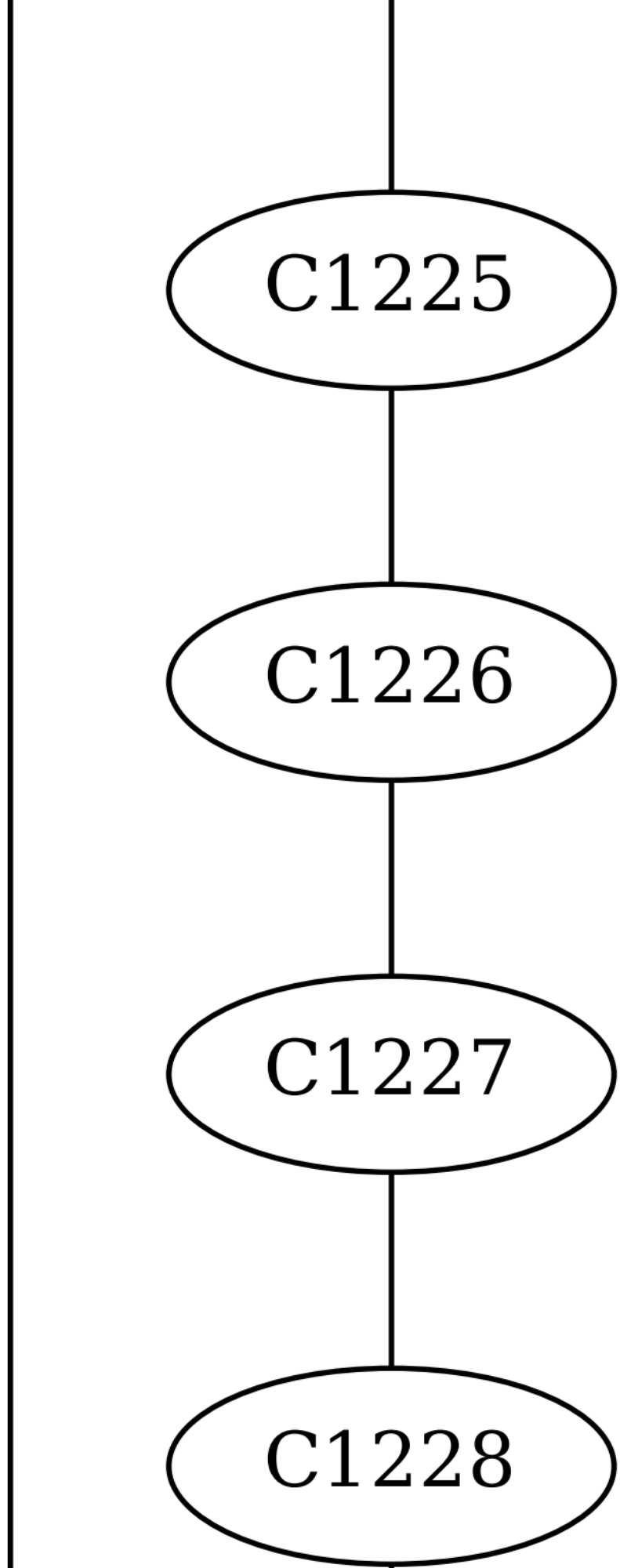
C1225
C1226
C1227
C1228

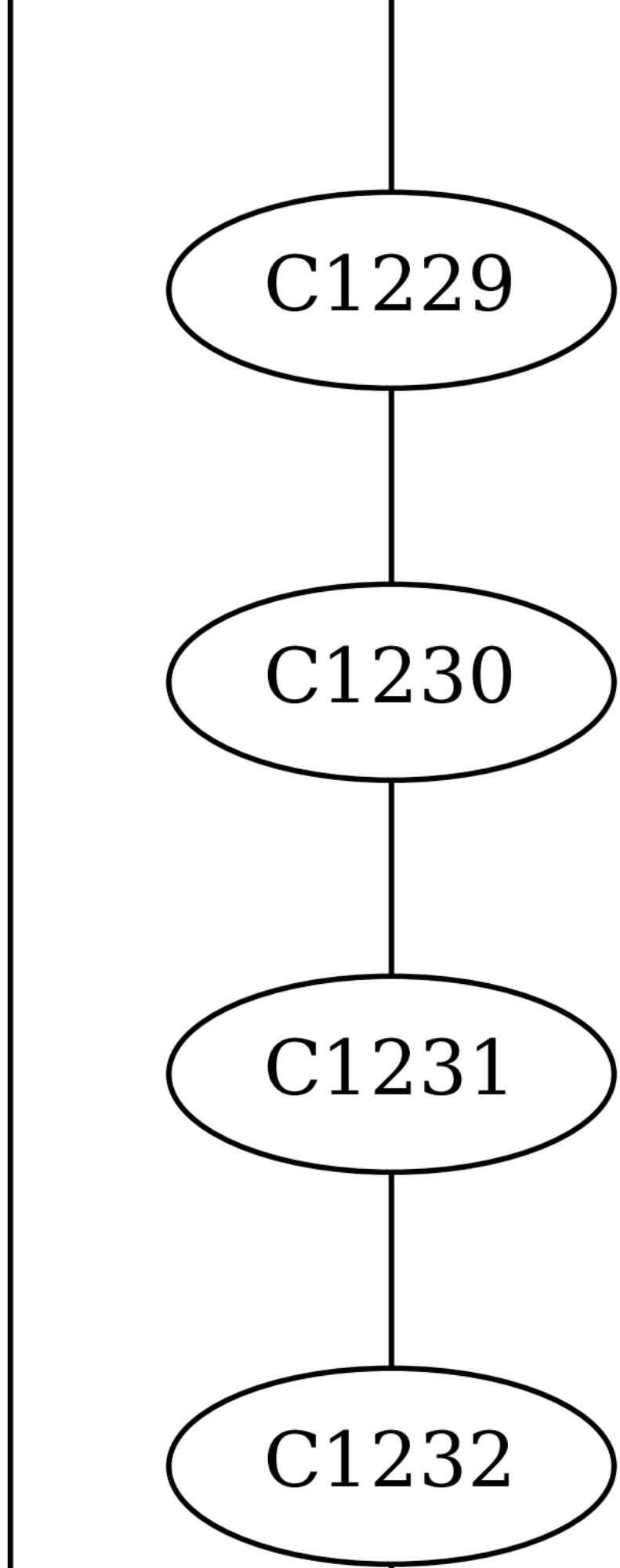
C1229
C1230
C1231
C1232

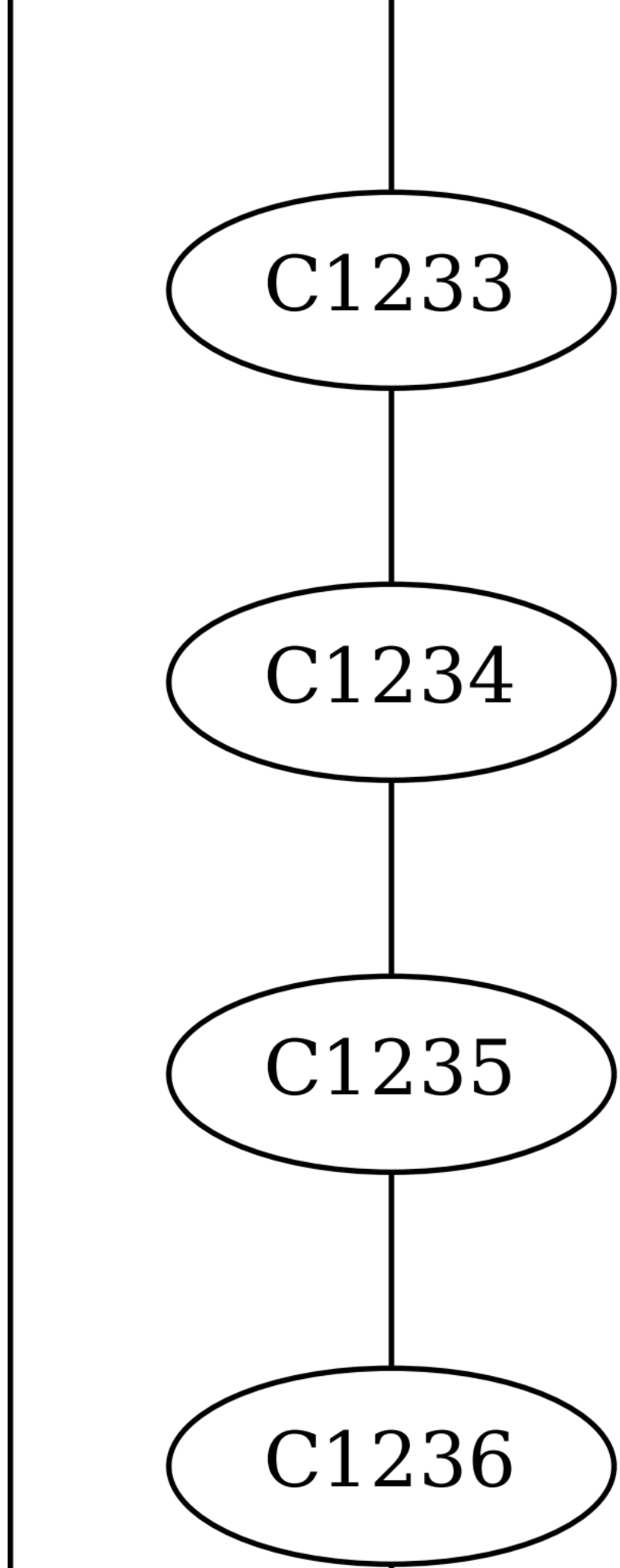
C1233
C1234
C1235
C1236

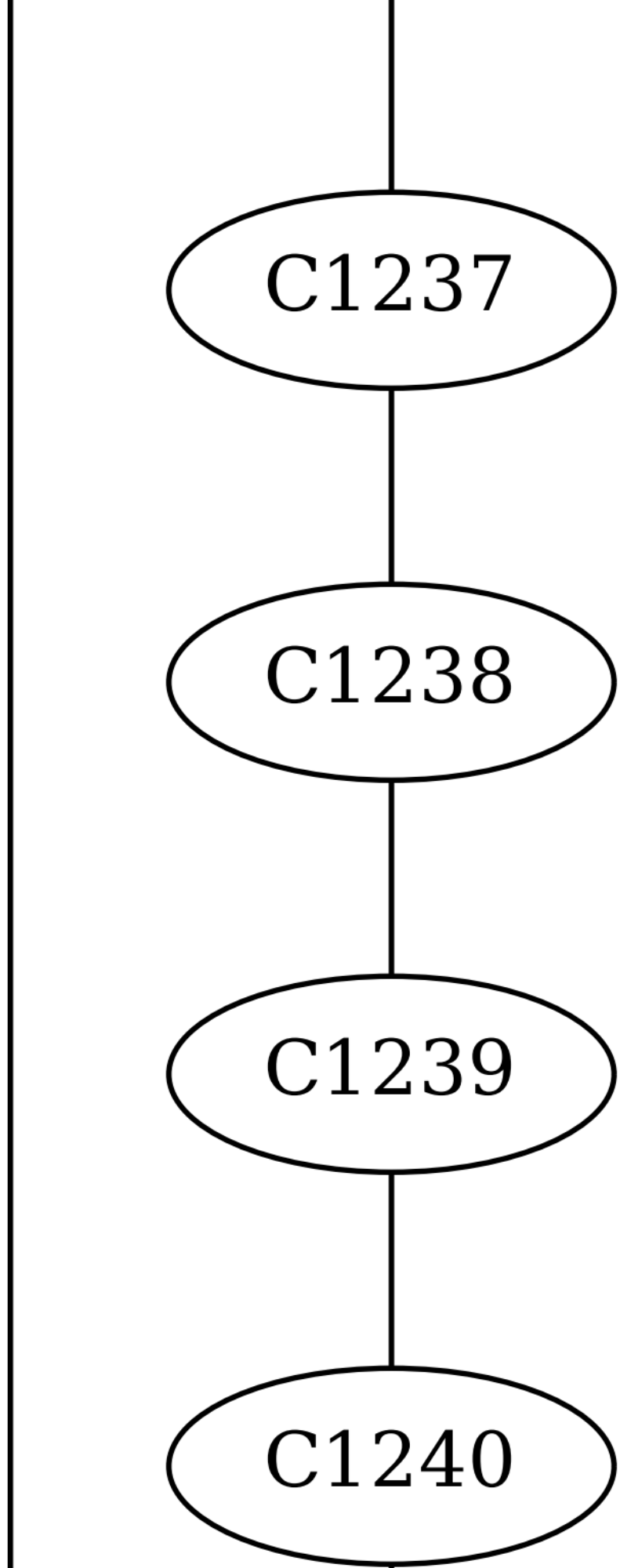
C1237
C1238
C1239
C1240

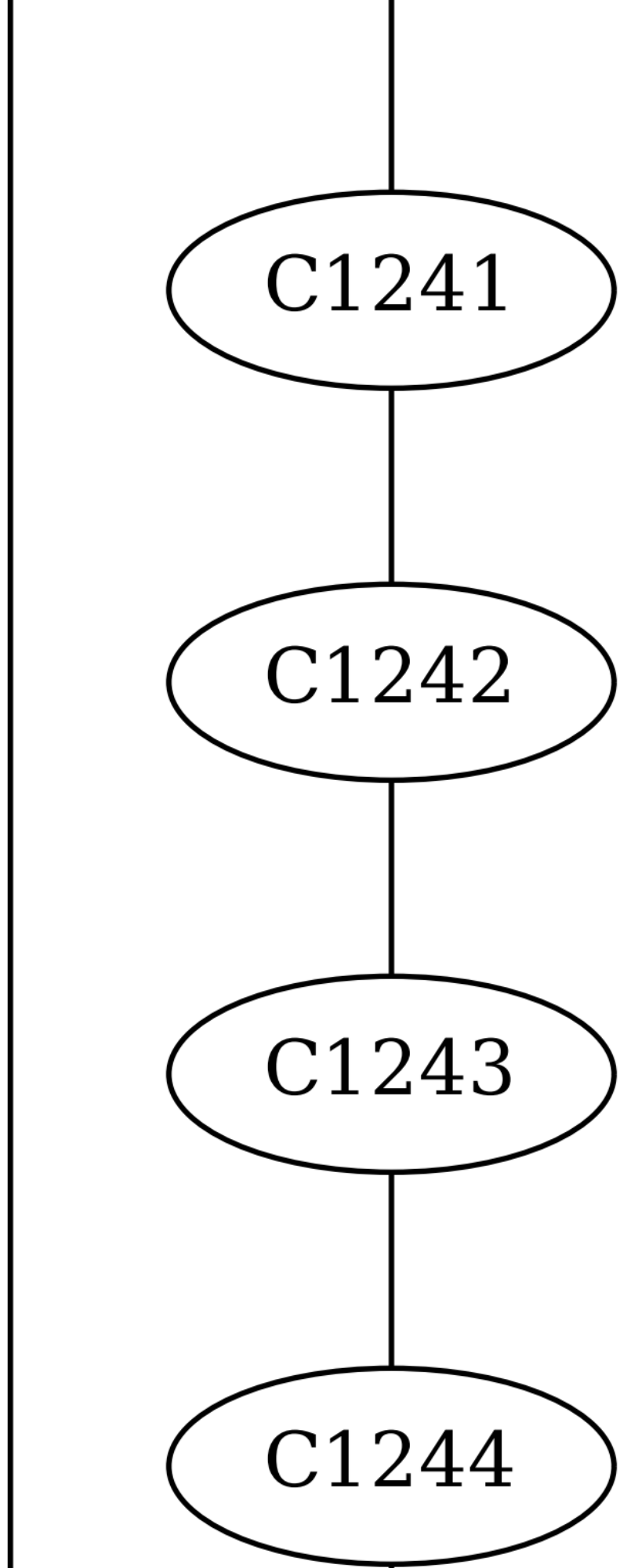
C1241
C1242
C1243
C1244

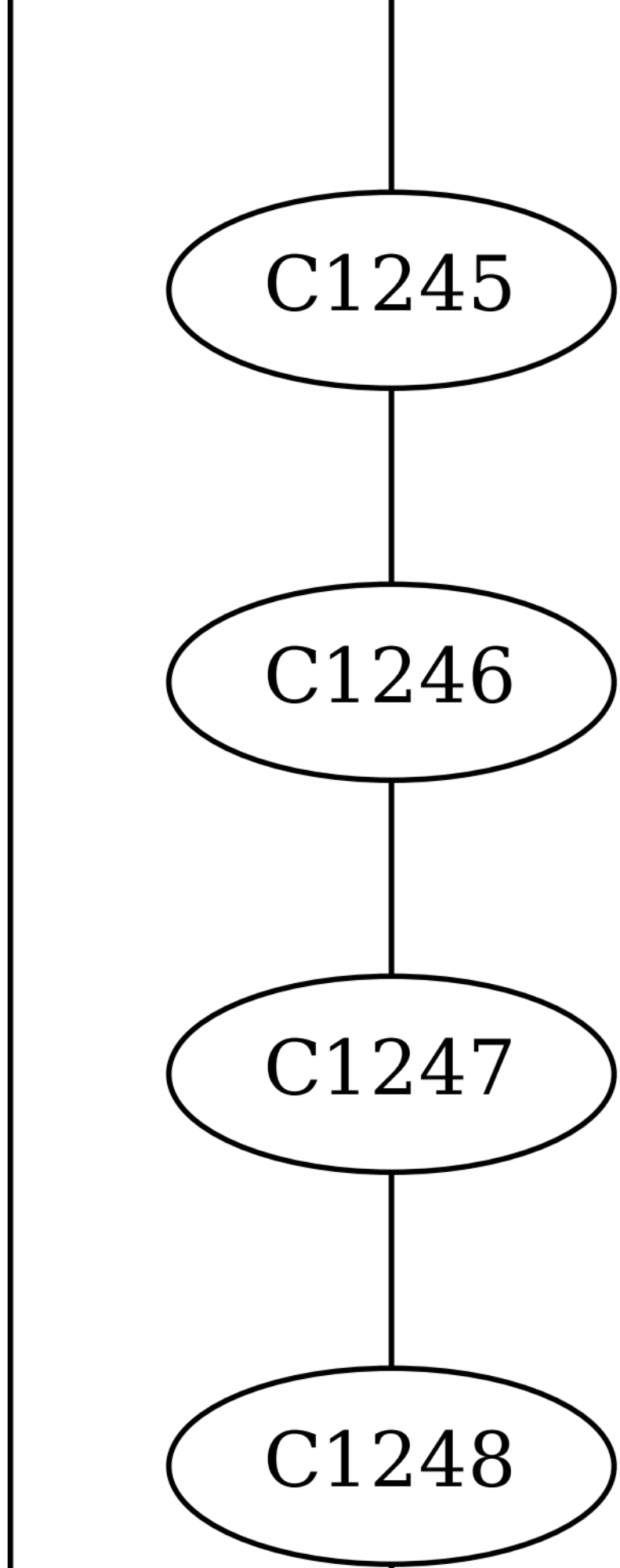
C1245
C1246
C1247
C1248

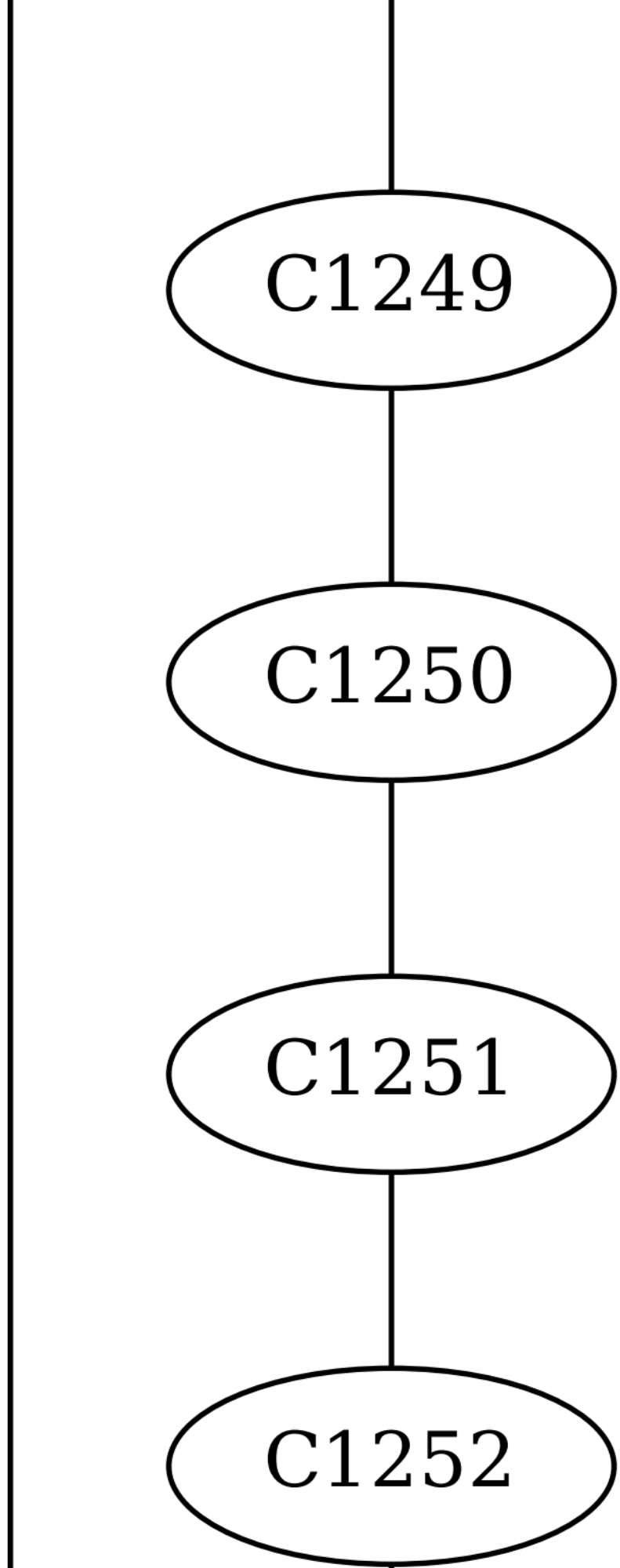
C1249
C1250
C1251
C1252

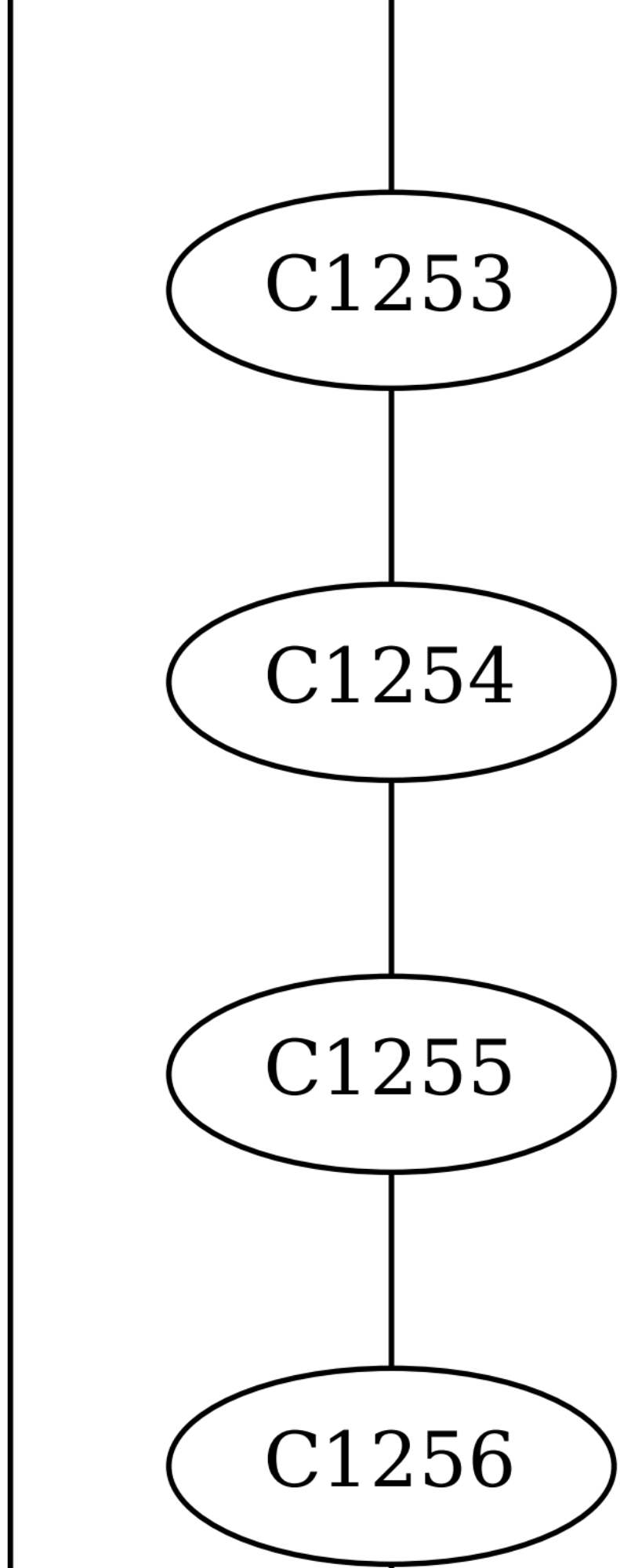
C1253
C1254
C1255
C1256

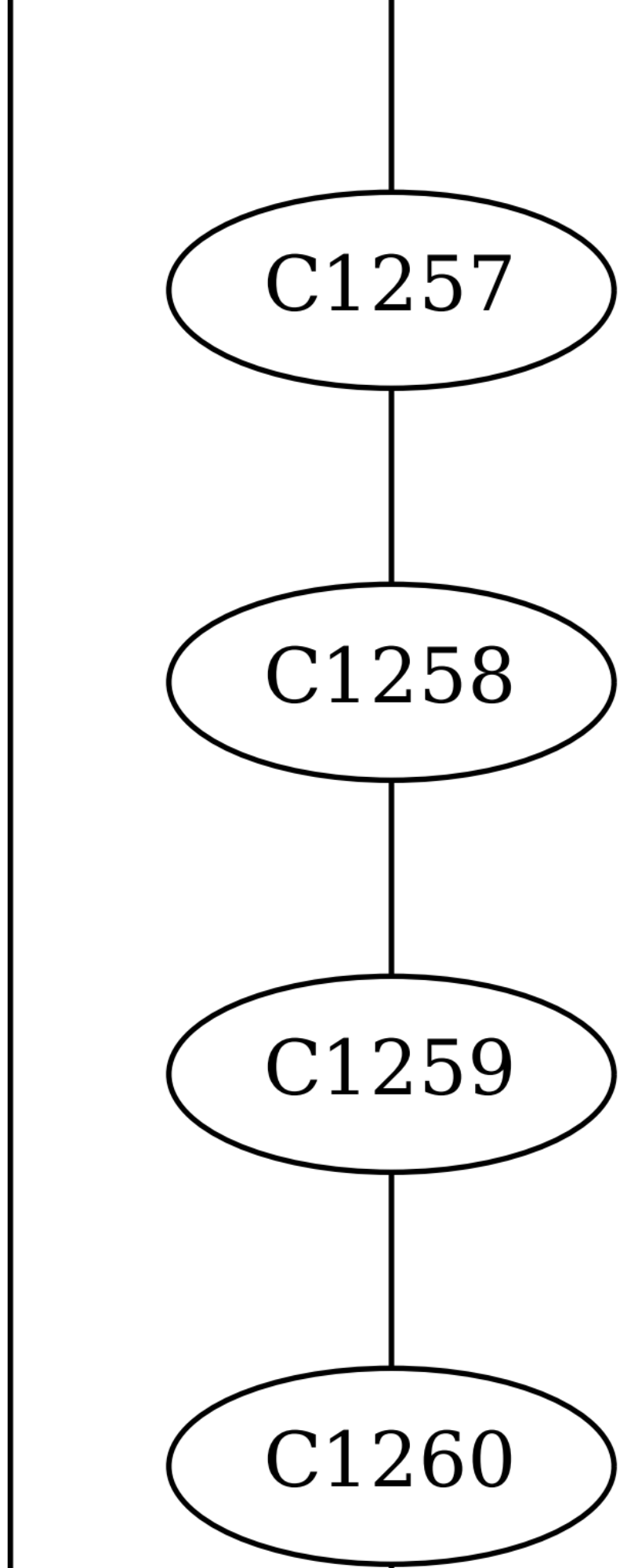
C1257
C1258
C1259
C1260

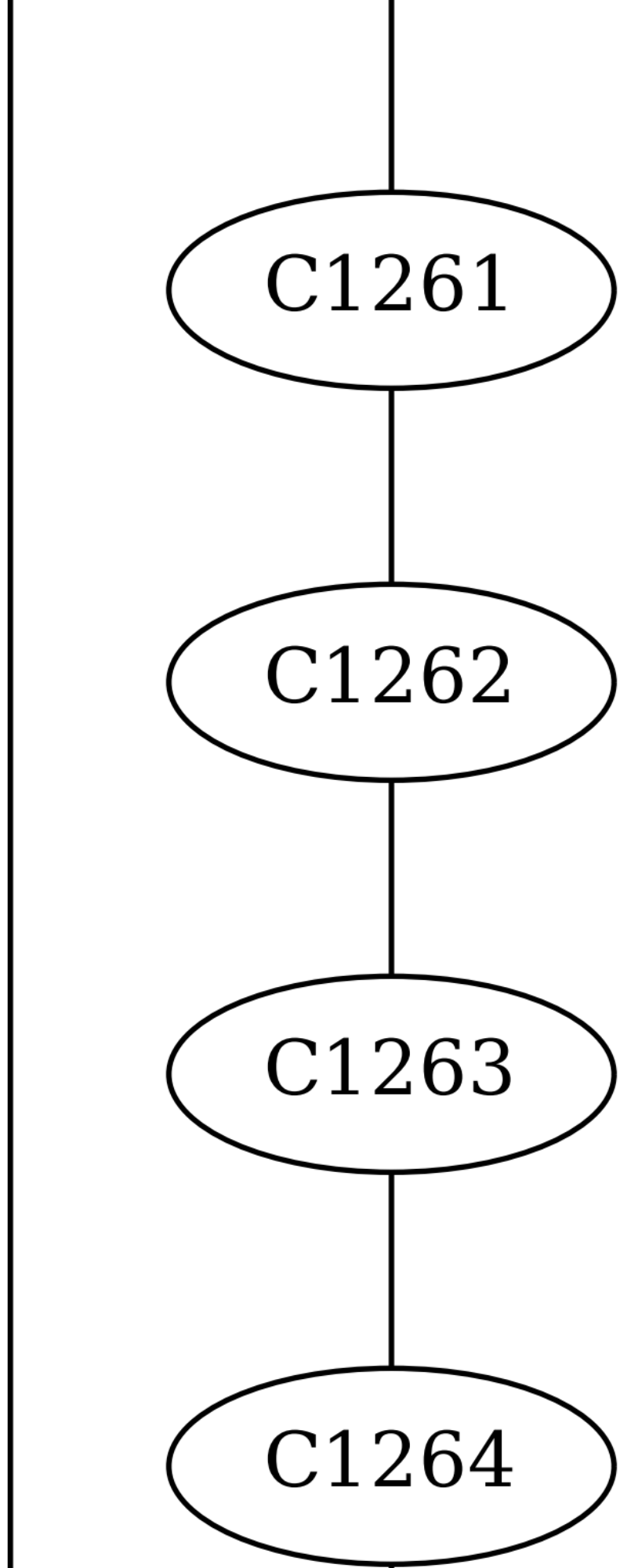
C1261
C1262
C1263
C1264

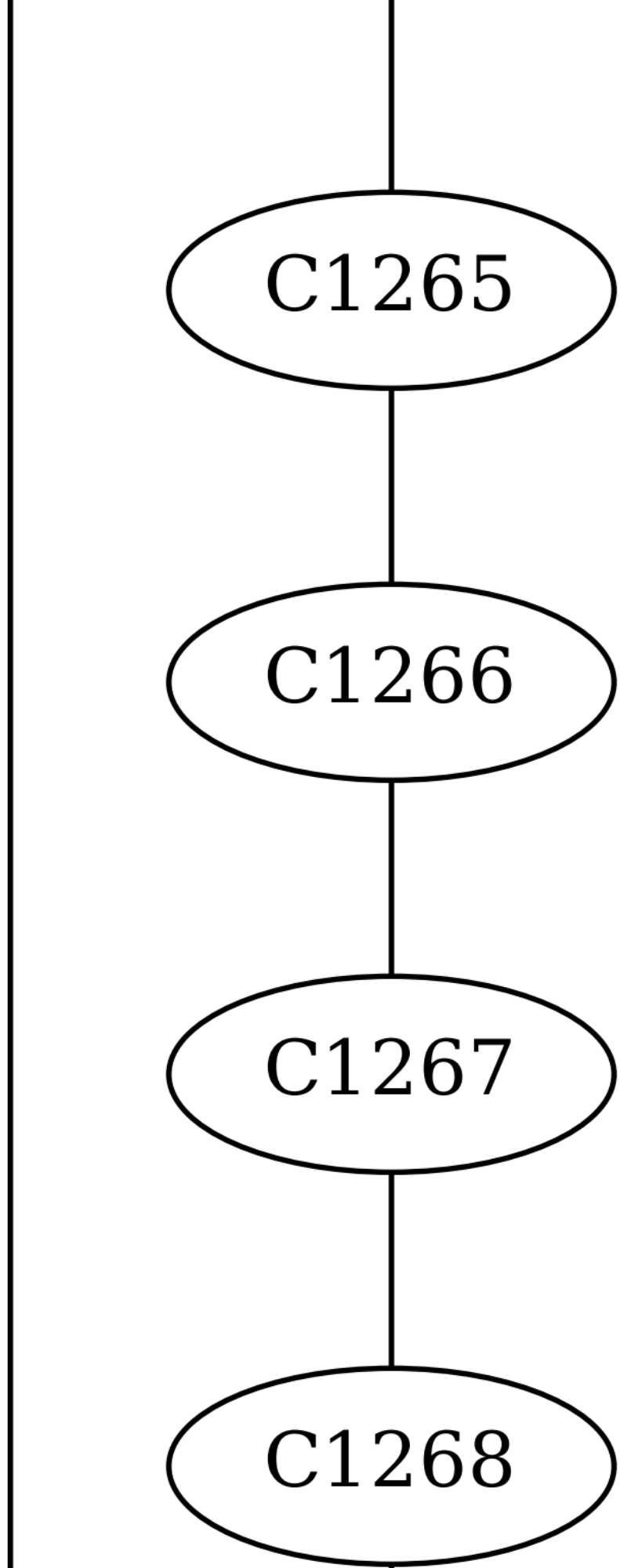
C1265
C1266
C1267
C1268

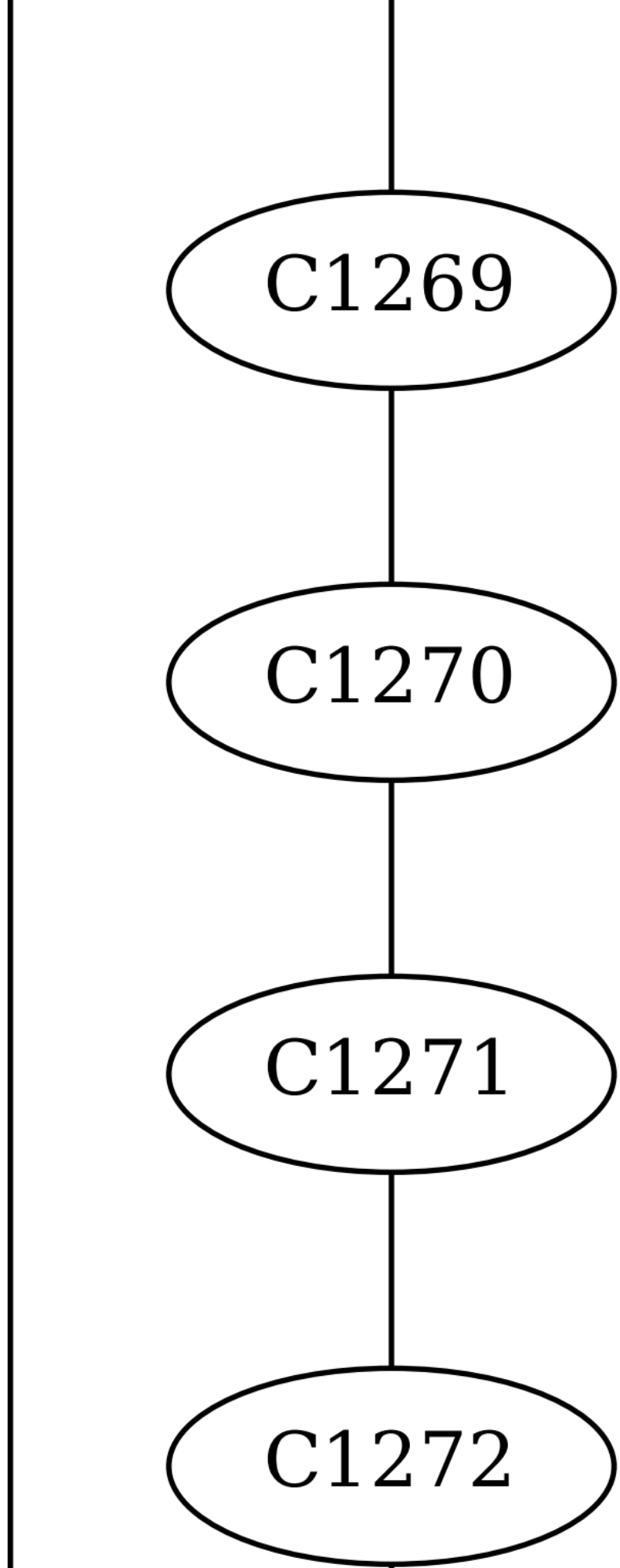
C1269
C1270
C1271
C1272

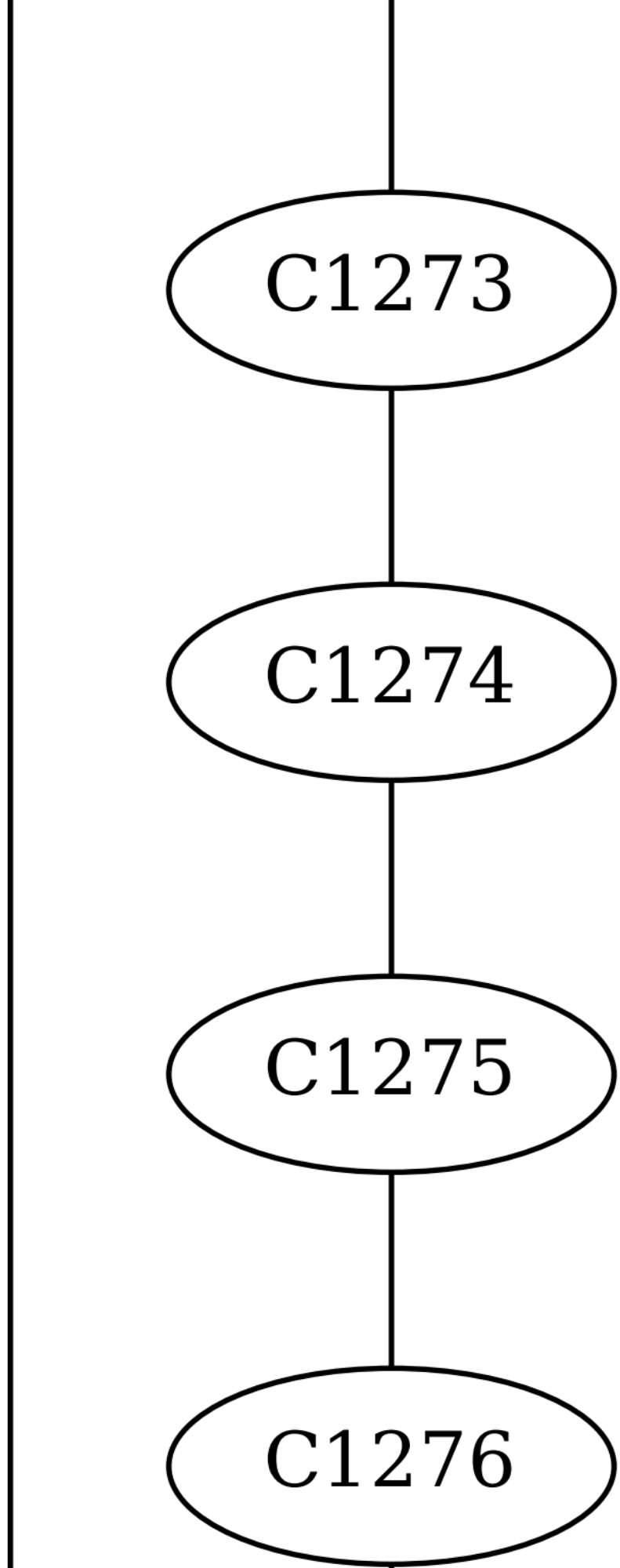
C1273
C1274
C1275
C1276

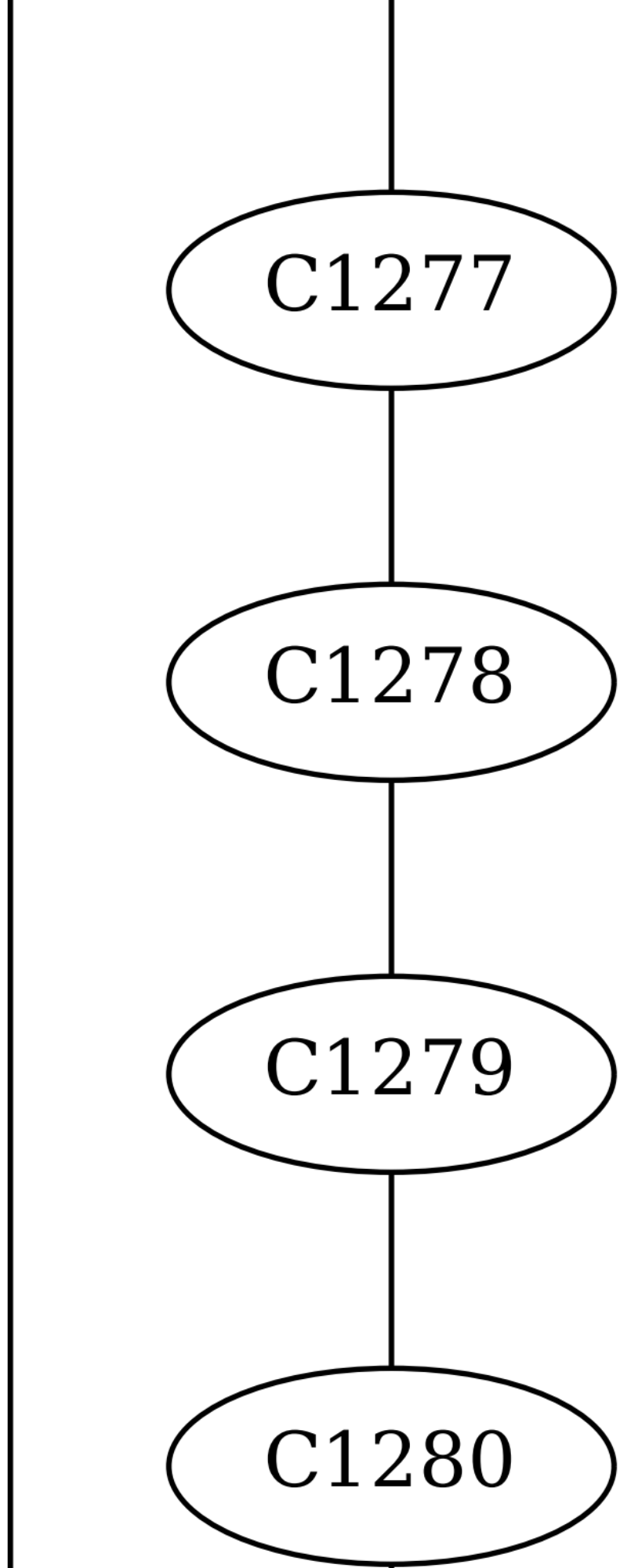
C1277
C1278
C1279
C1280

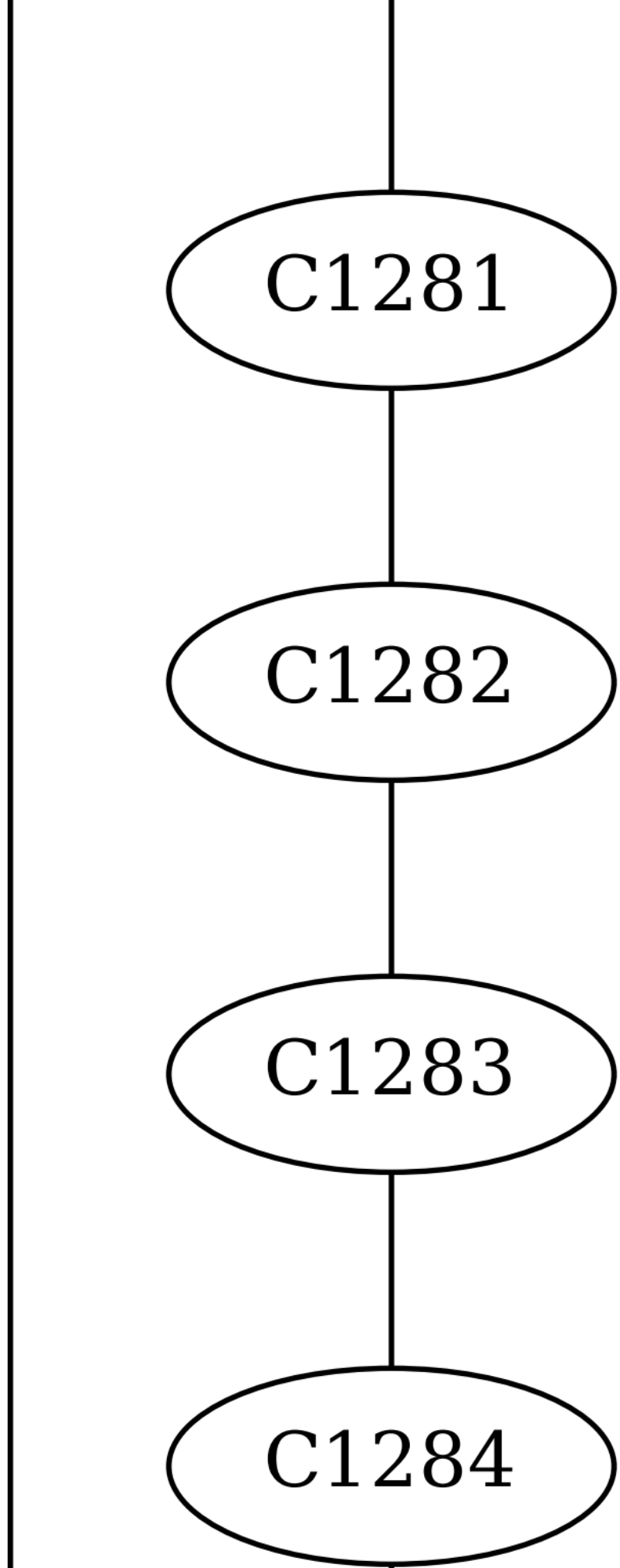
C1281
C1282
C1283
C1284

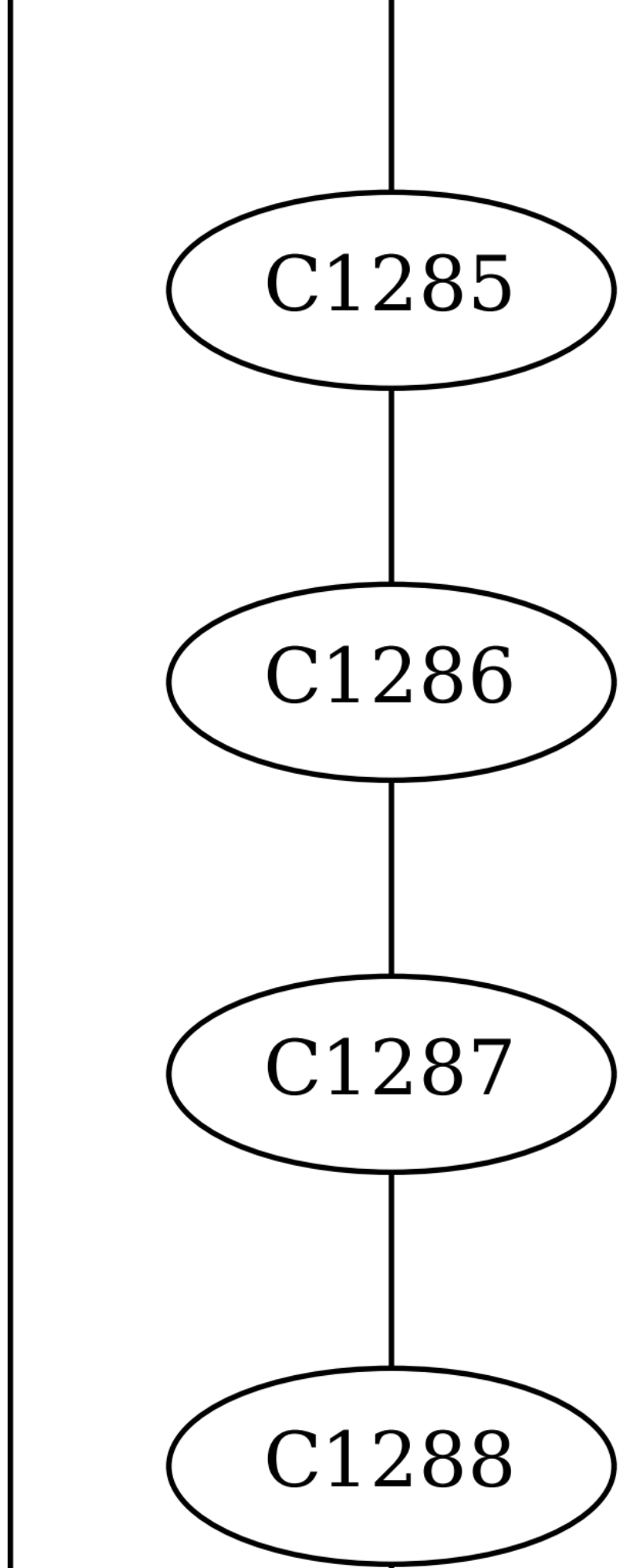
C1285
C1286
C1287
C1288

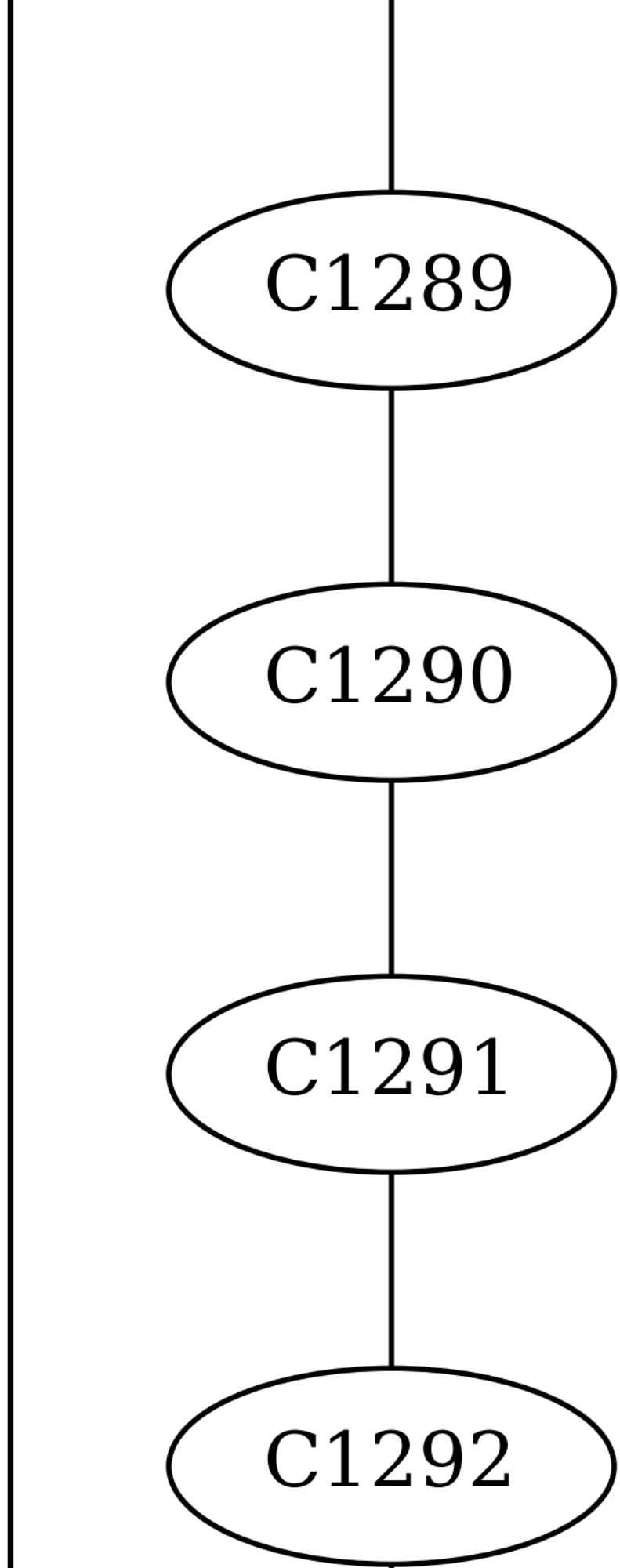
C1289
C1290
C1291
C1292

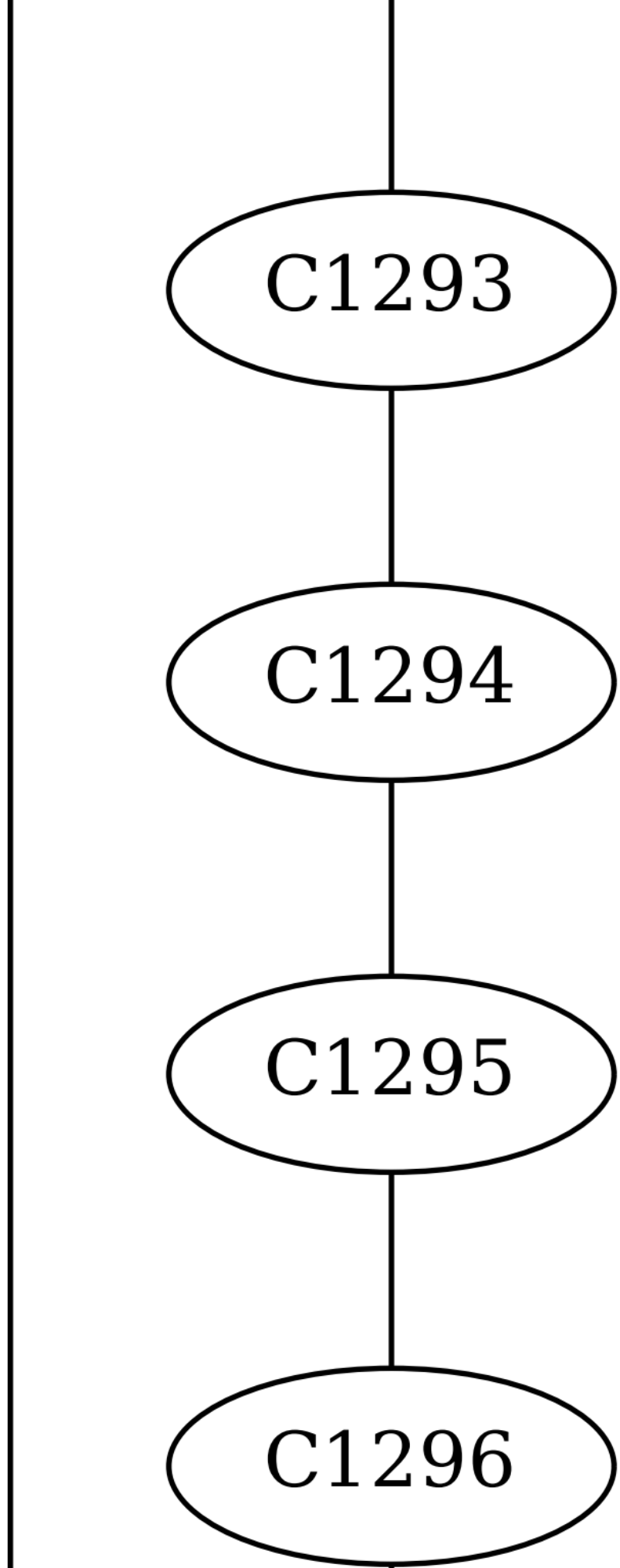
C1293
C1294
C1295
C1296

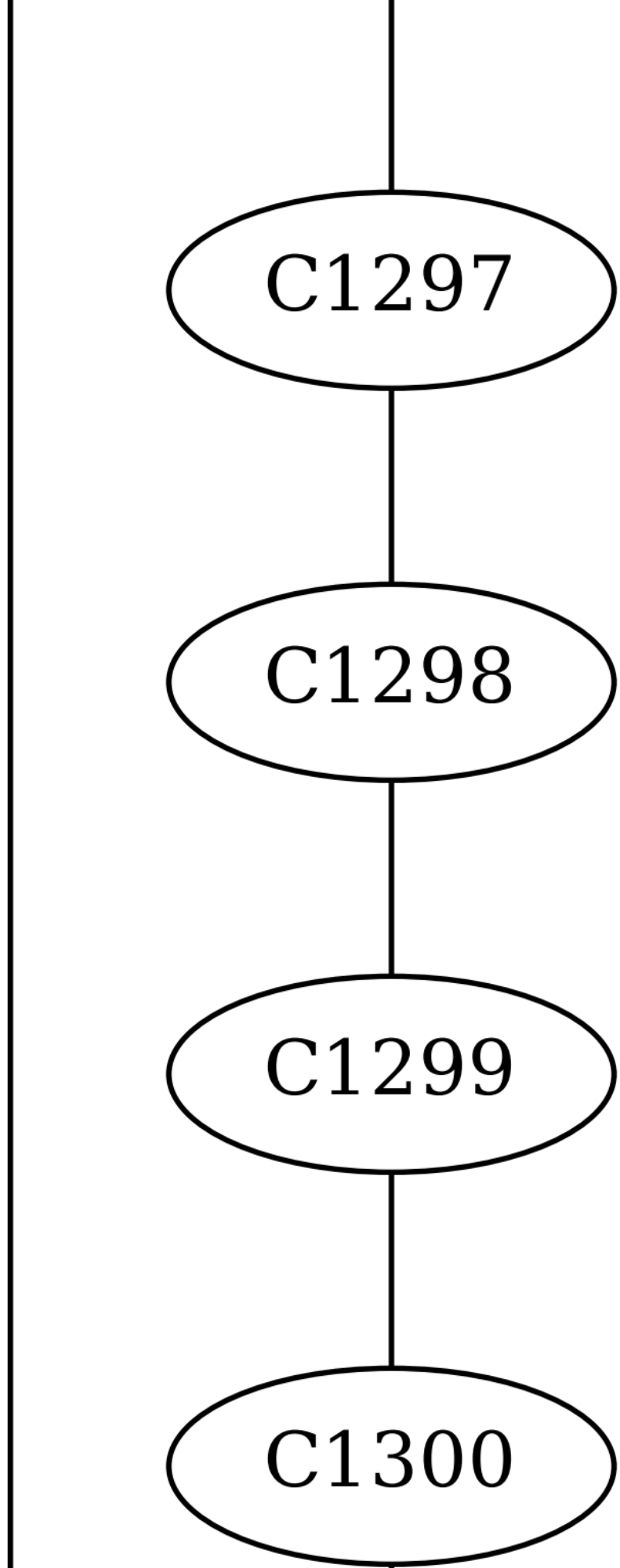
C1297
C1298
C1299
C1300

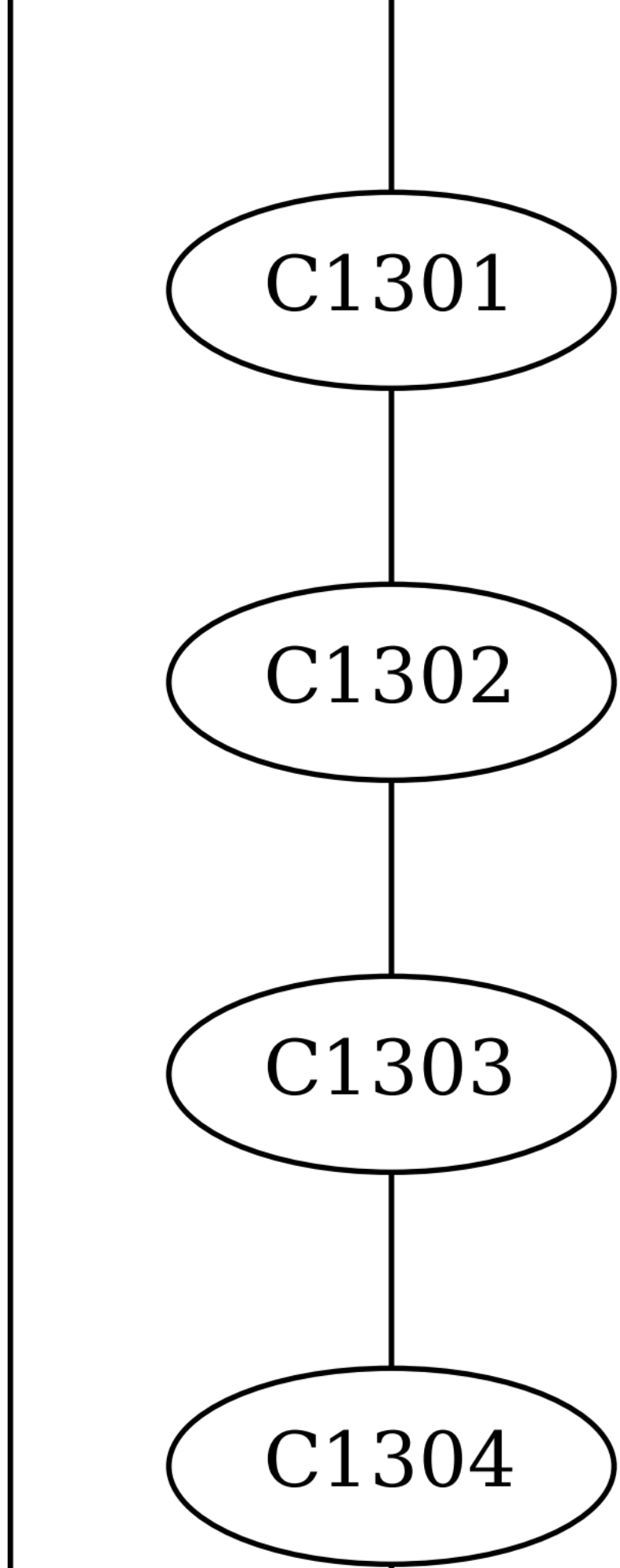
C1301
C1302
C1303
C1304

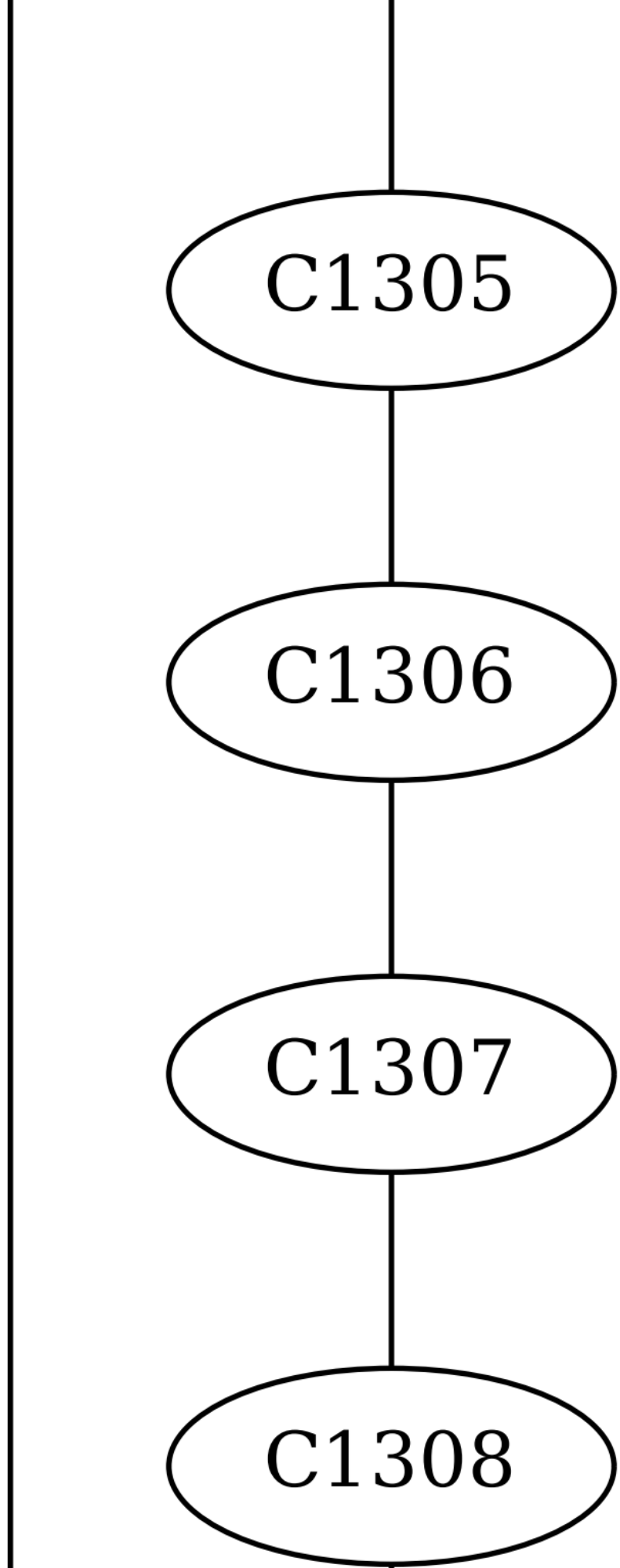
C1305
C1306
C1307
C1308

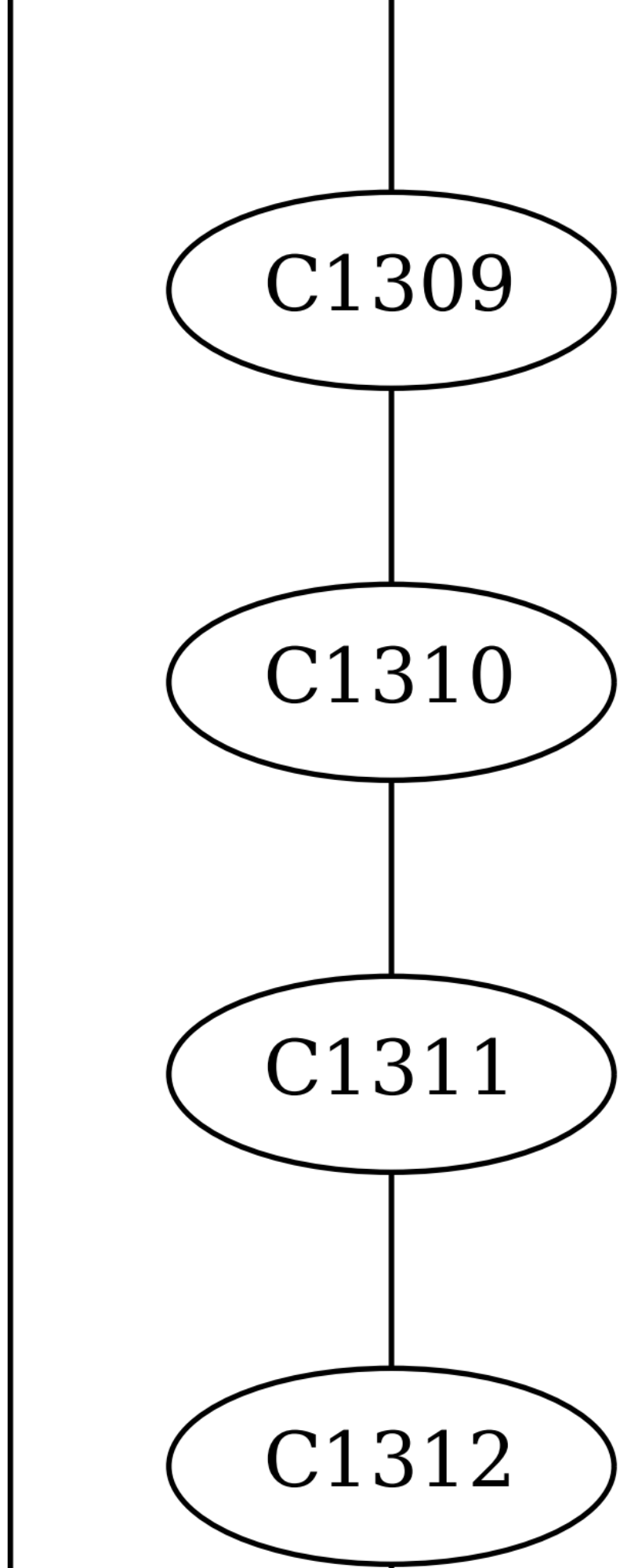
C1309
C1310
C1311
C1312

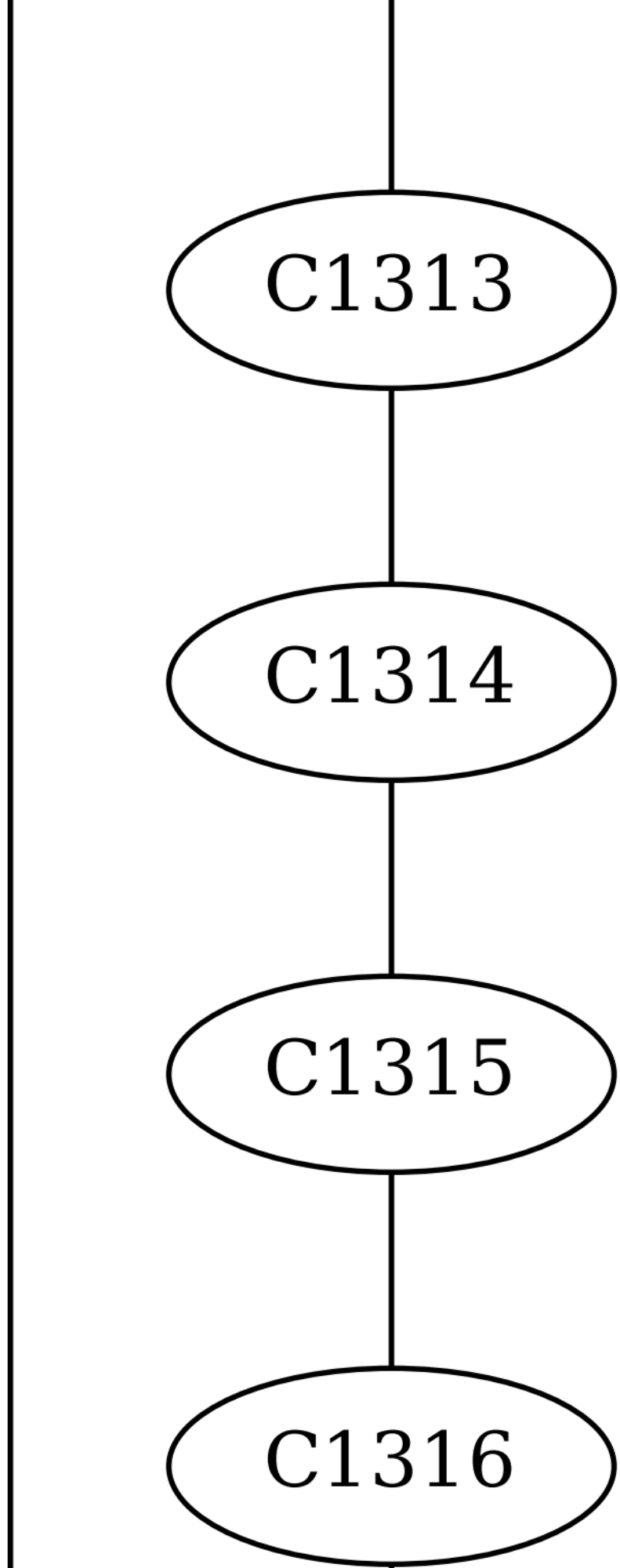
C1313
C1314
C1315
C1316

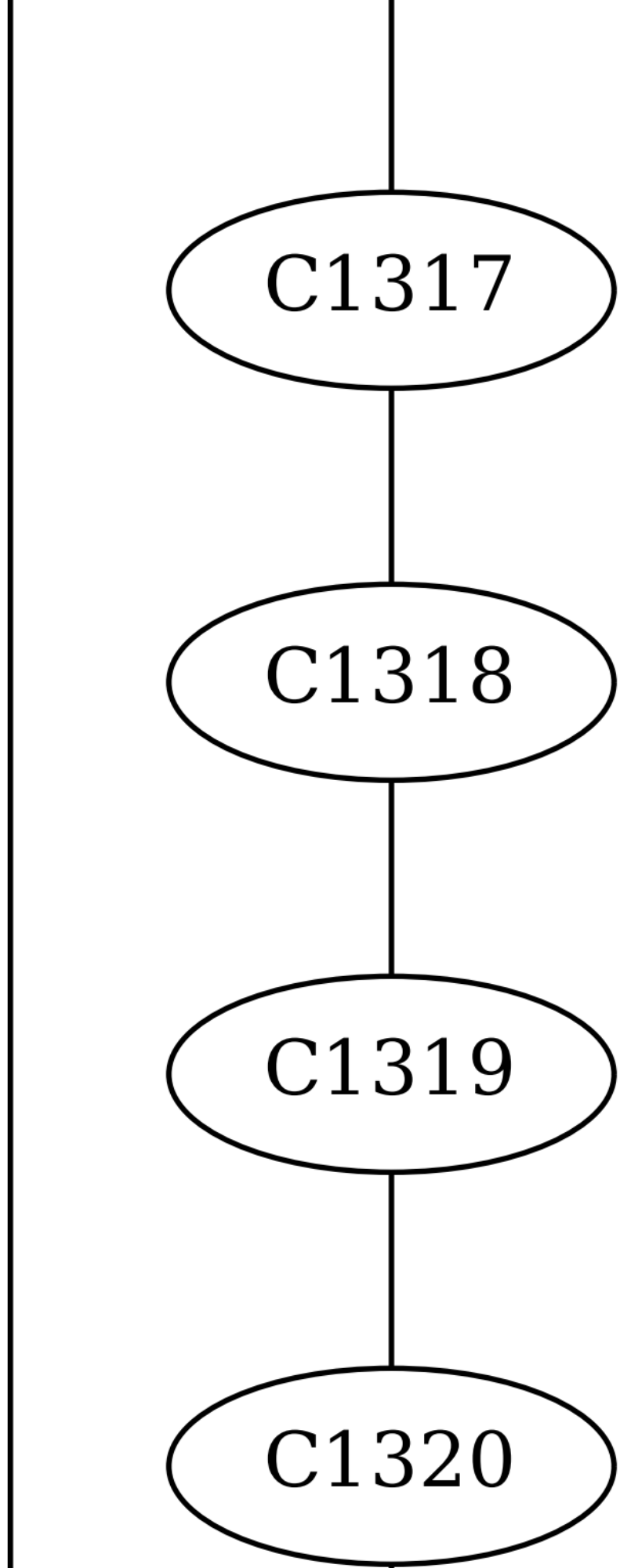
C1317
C1318
C1319
C1320

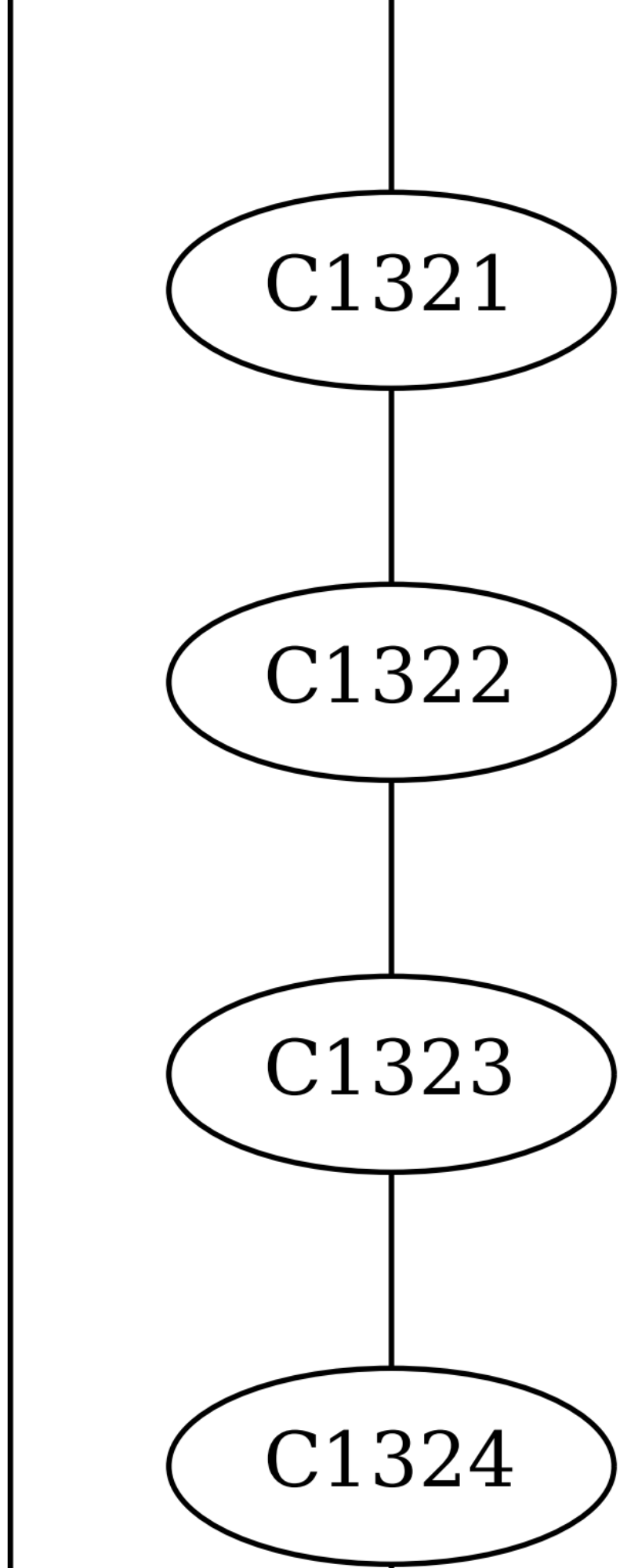
C1321
C1322
C1323
C1324

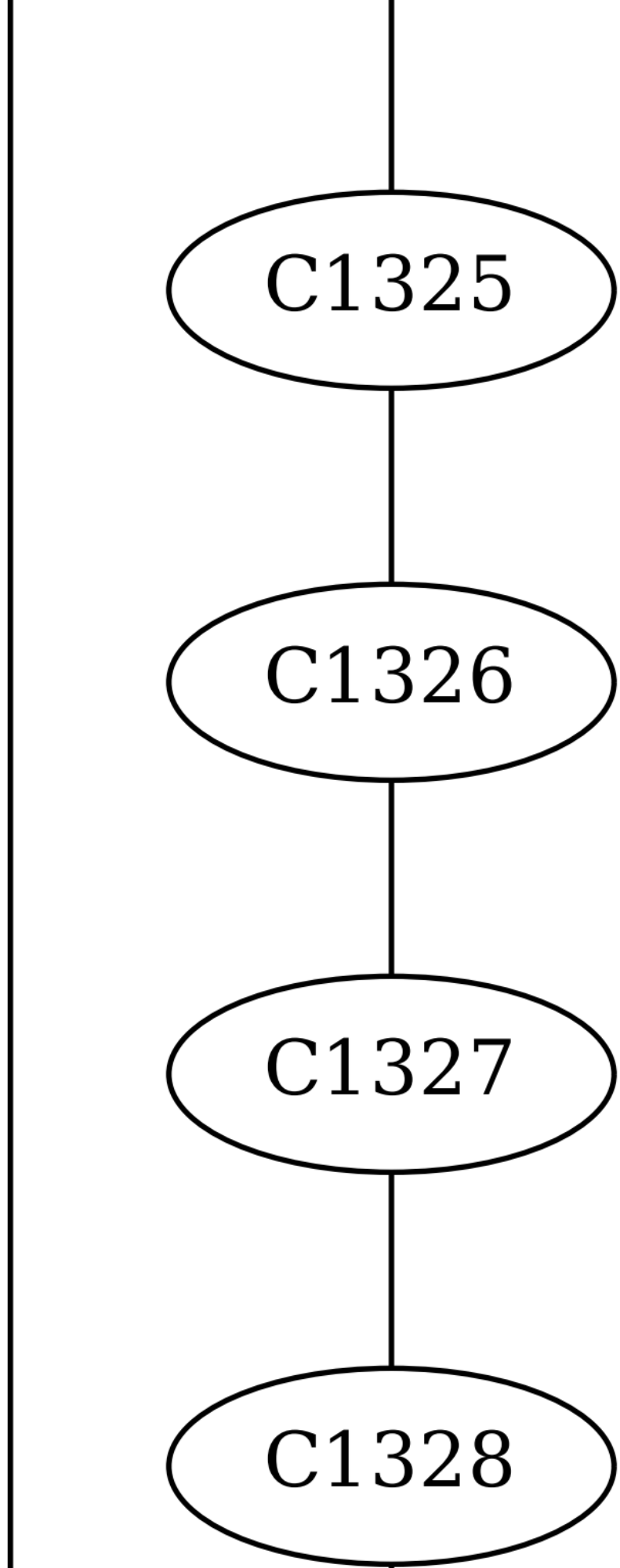
C1325
C1326
C1327
C1328

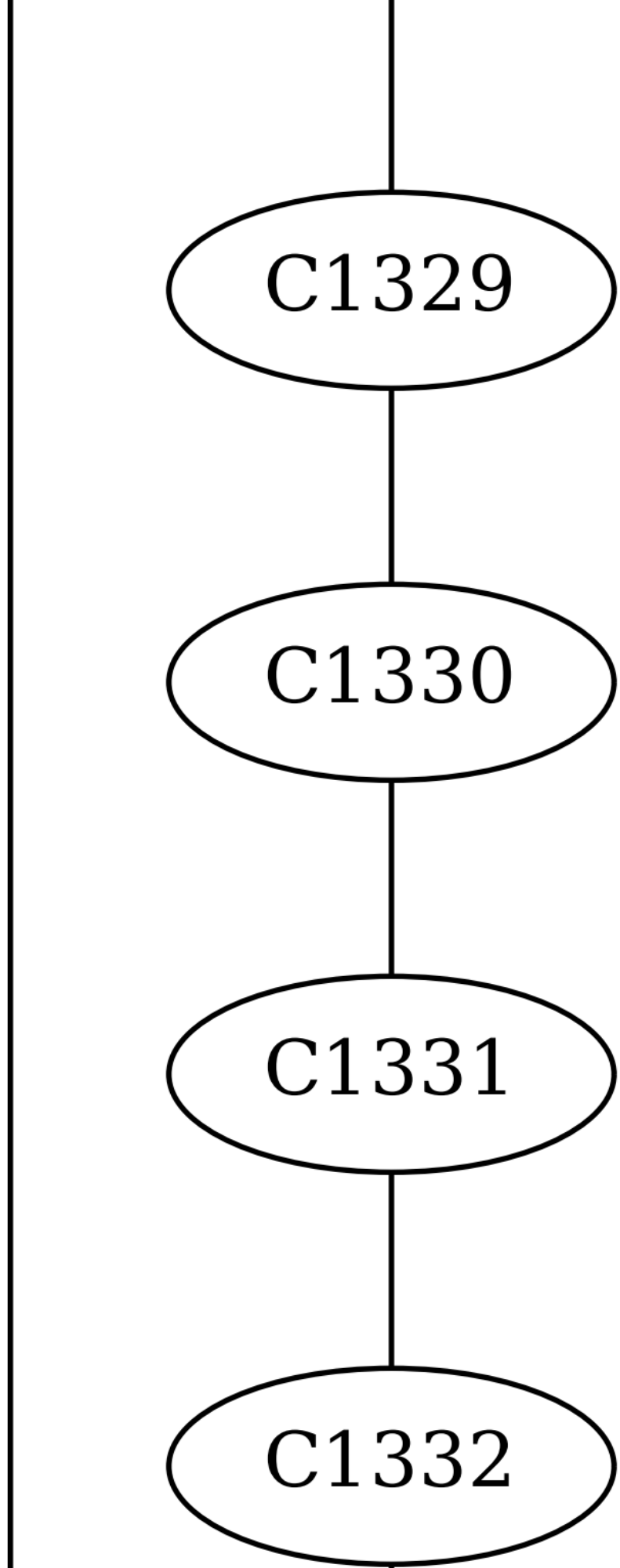
C1329
C1330
C1331
C1332

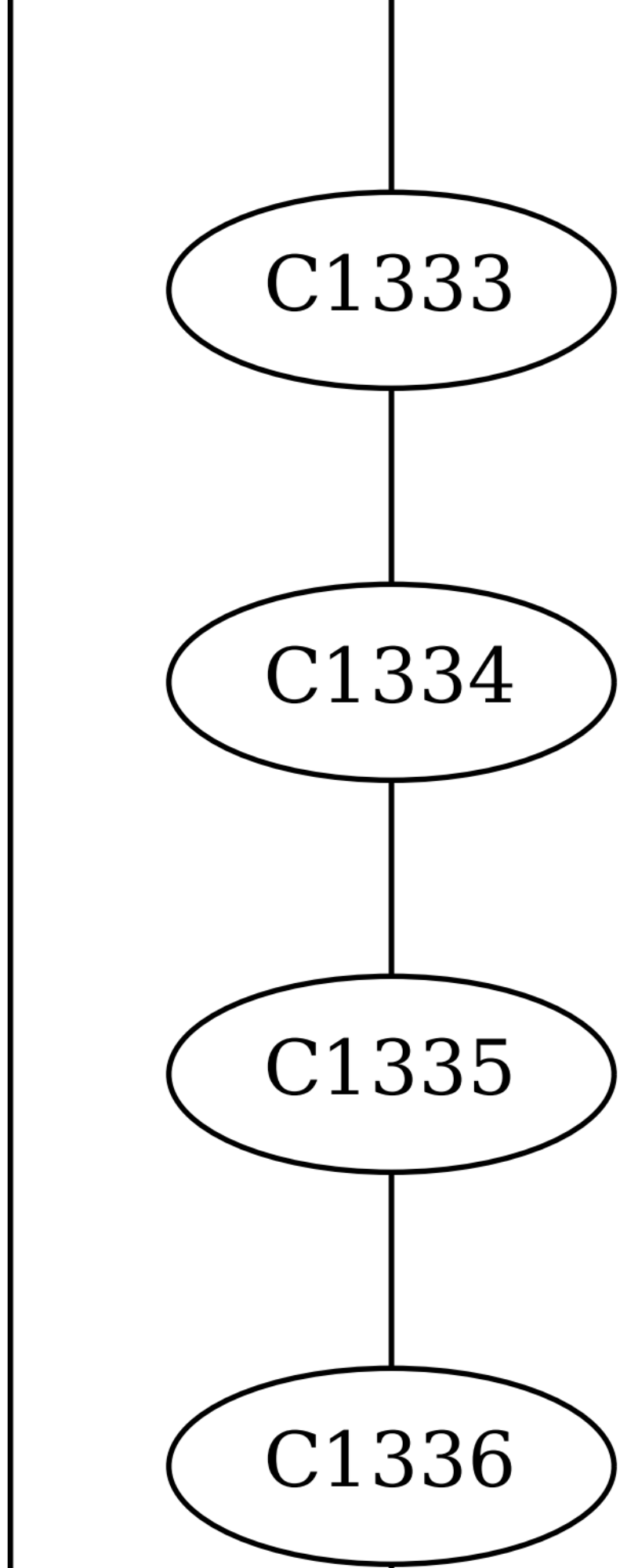
C1333
C1334
C1335
C1336

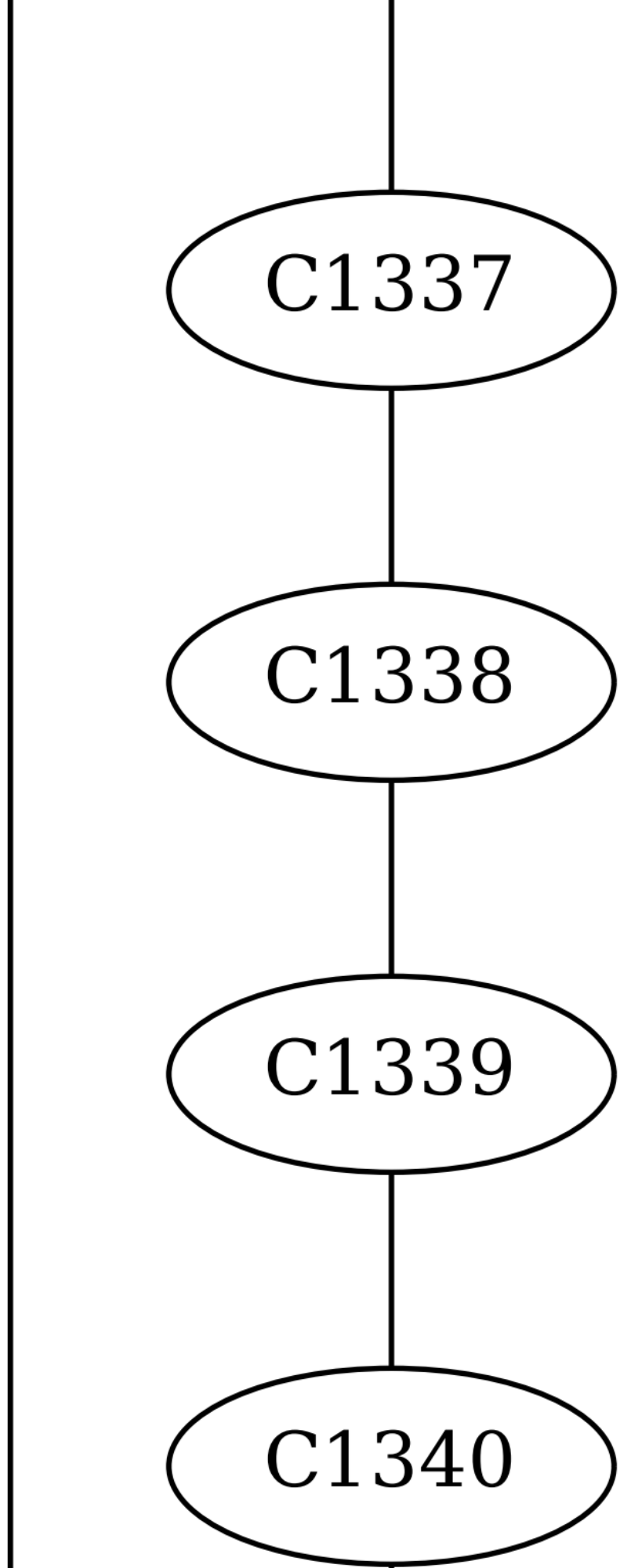
C1337
C1338
C1339
C1340

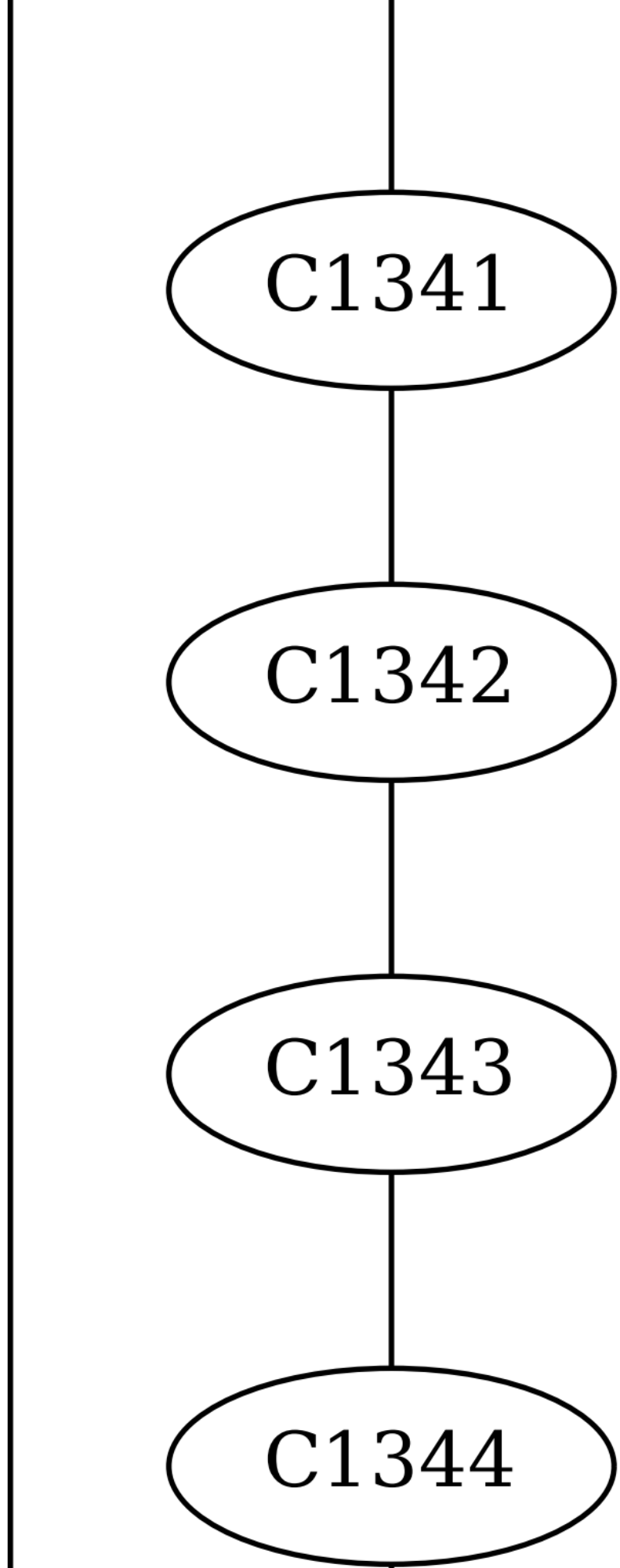
C1341
C1342
C1343
C1344

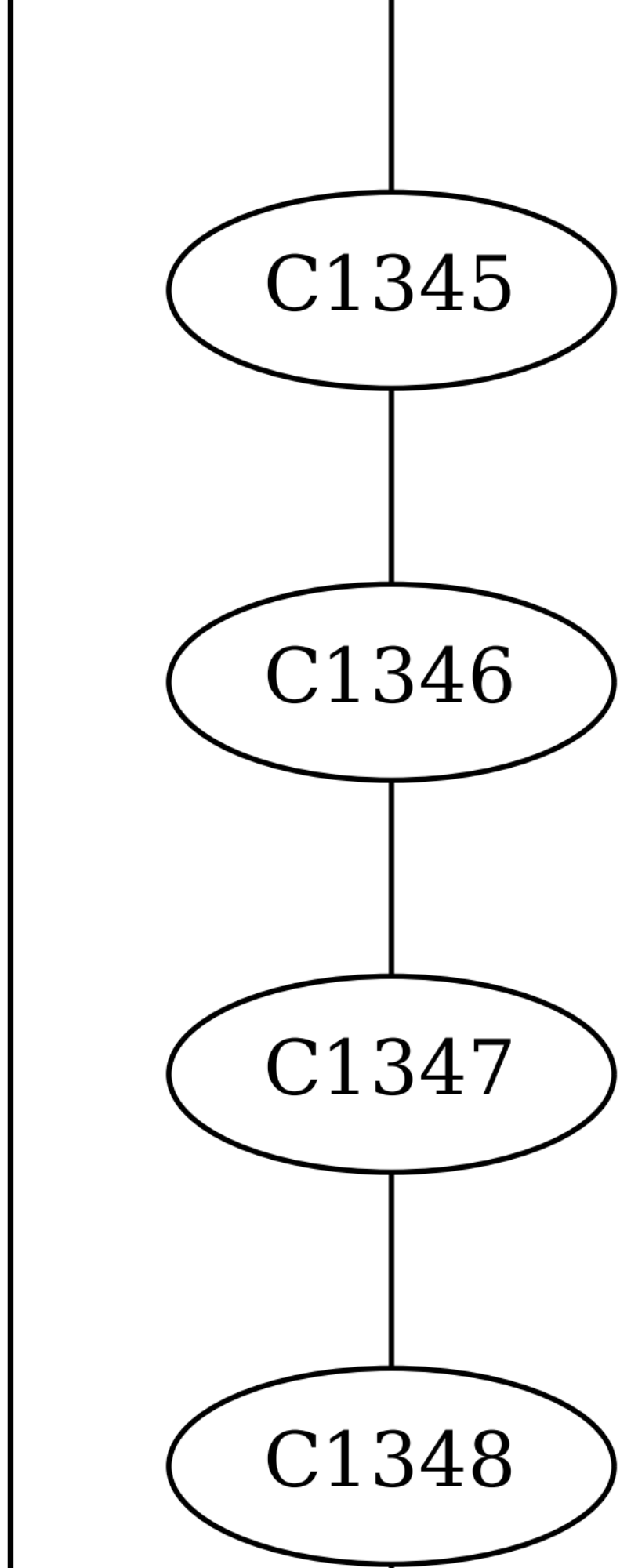
C1345
C1346
C1347
C1348

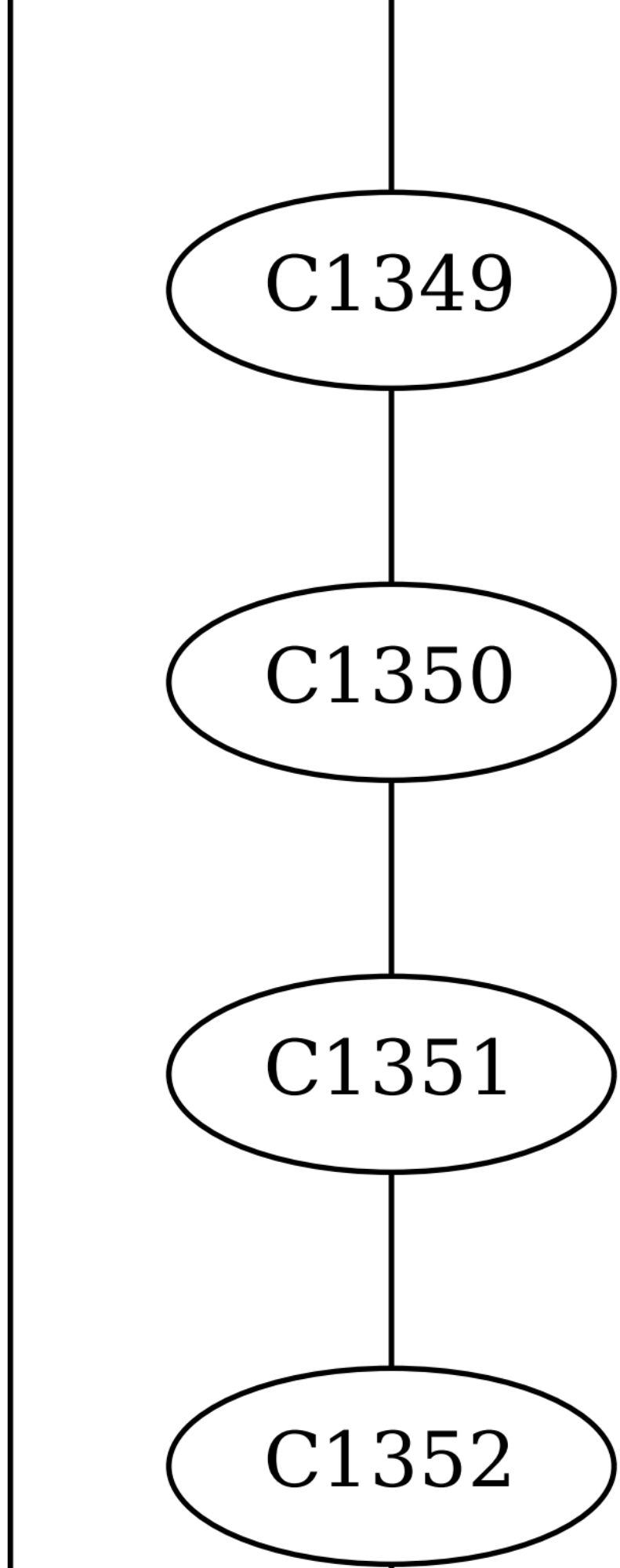
C1349
C1350
C1351
C1352

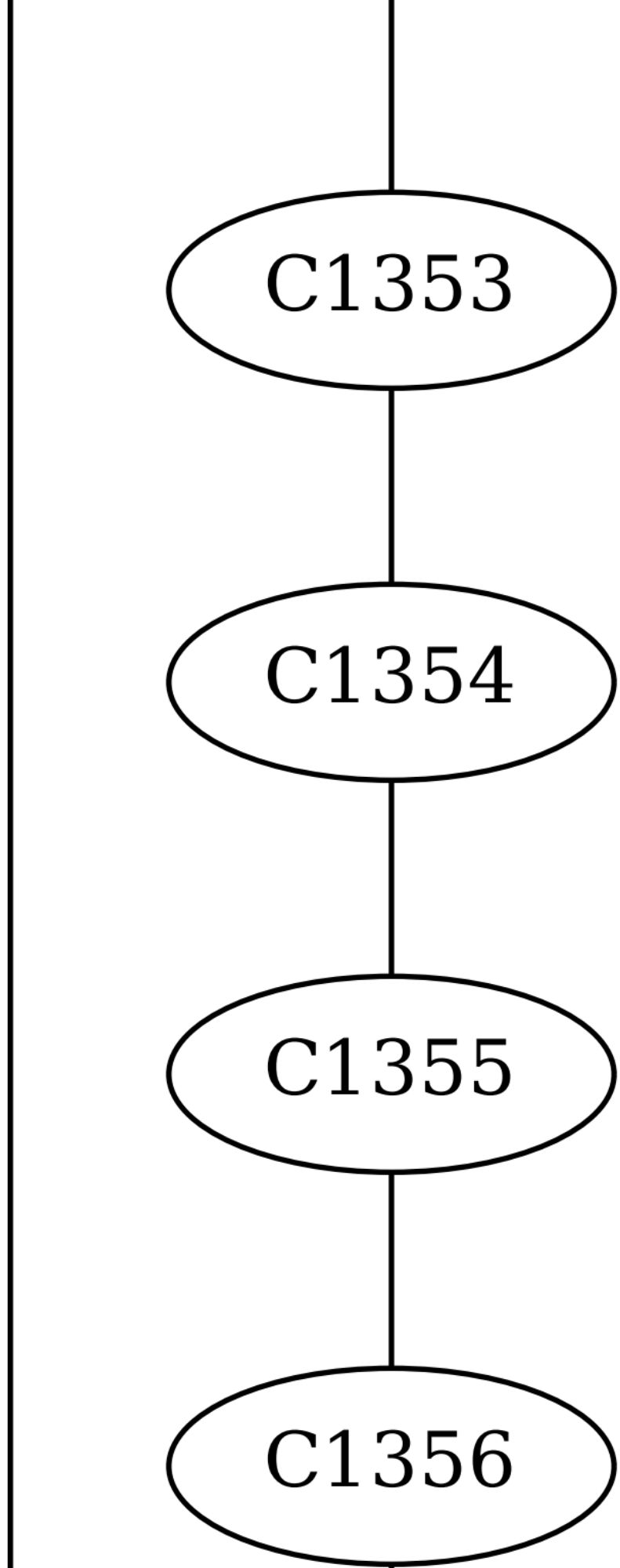
C1353
C1354
C1355
C1356

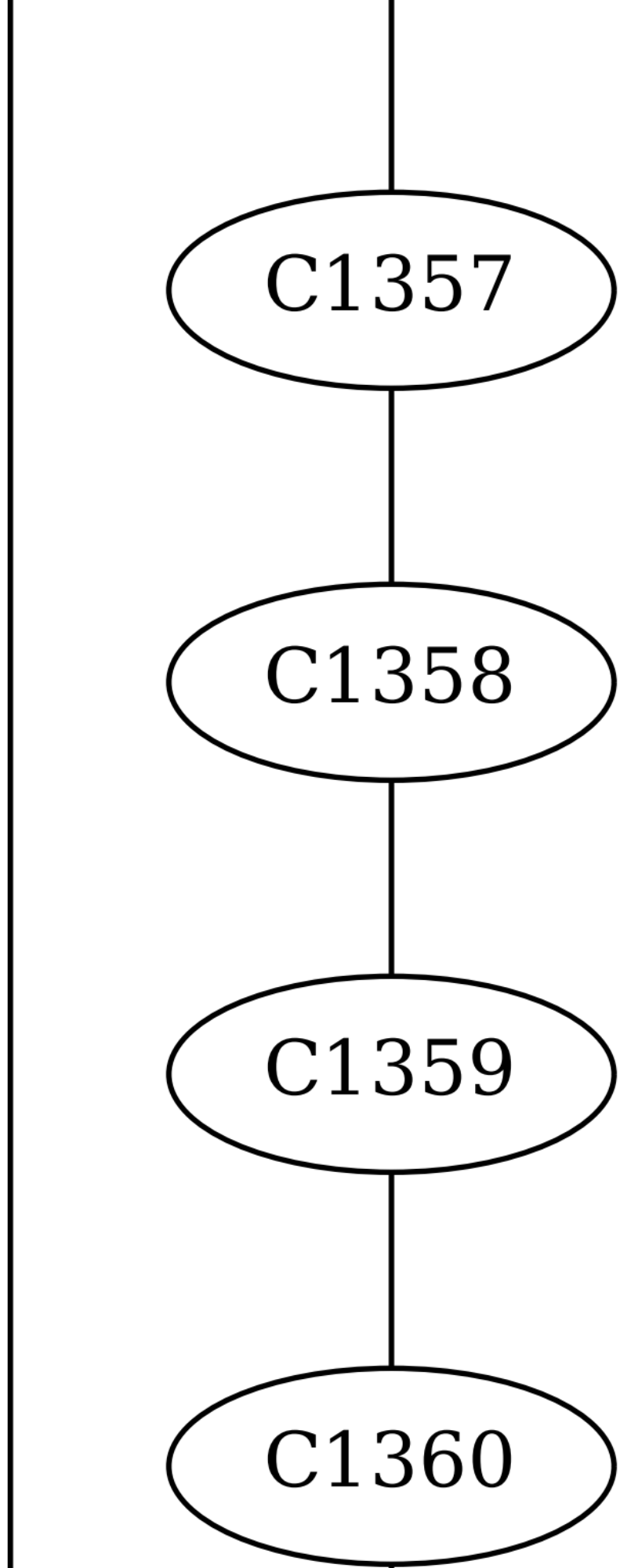
C1357
C1358
C1359
C1360

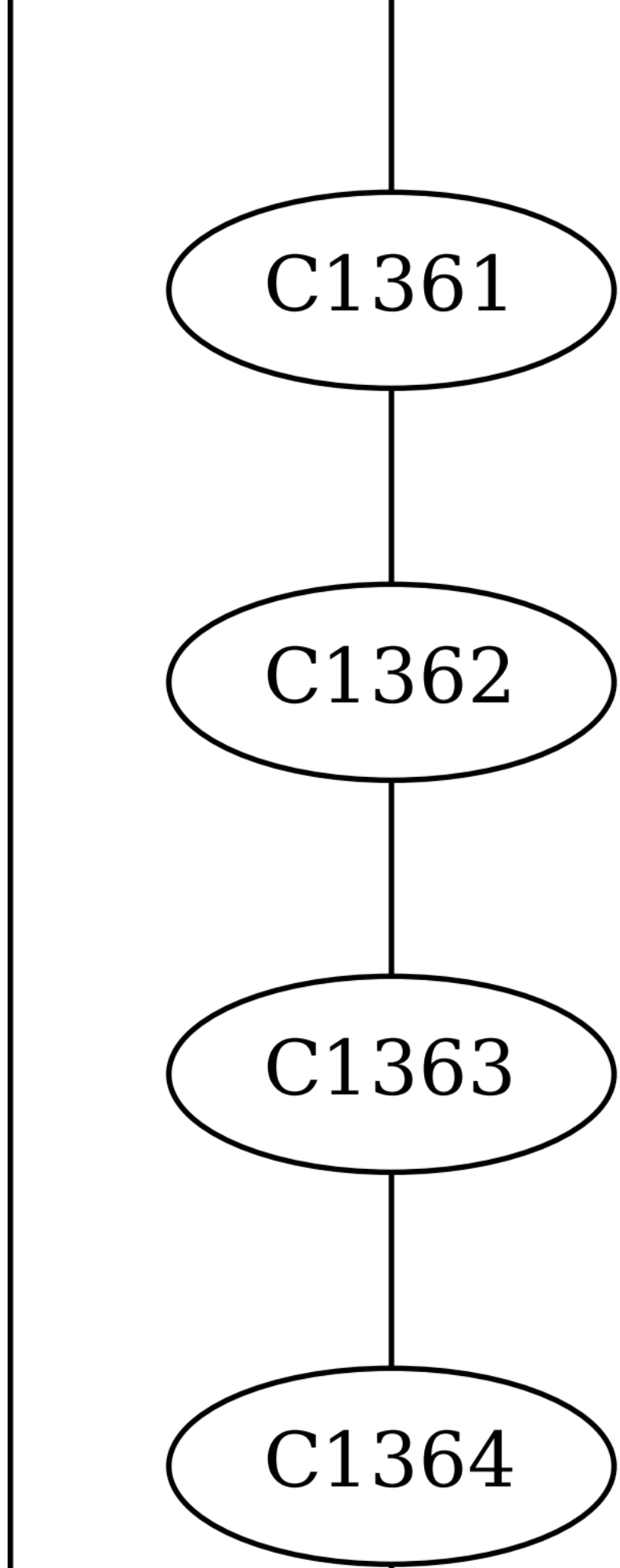
C1361
C1362
C1363
C1364

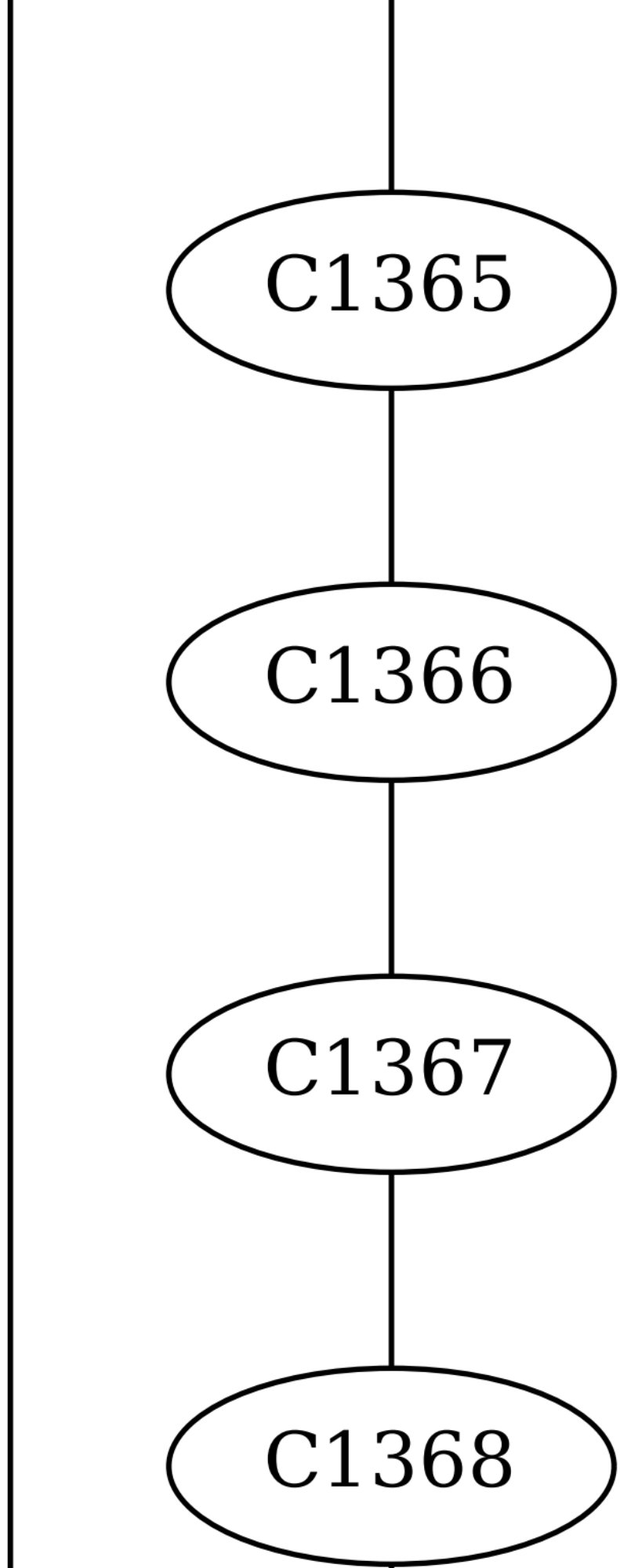
C1365
C1366
C1367
C1368

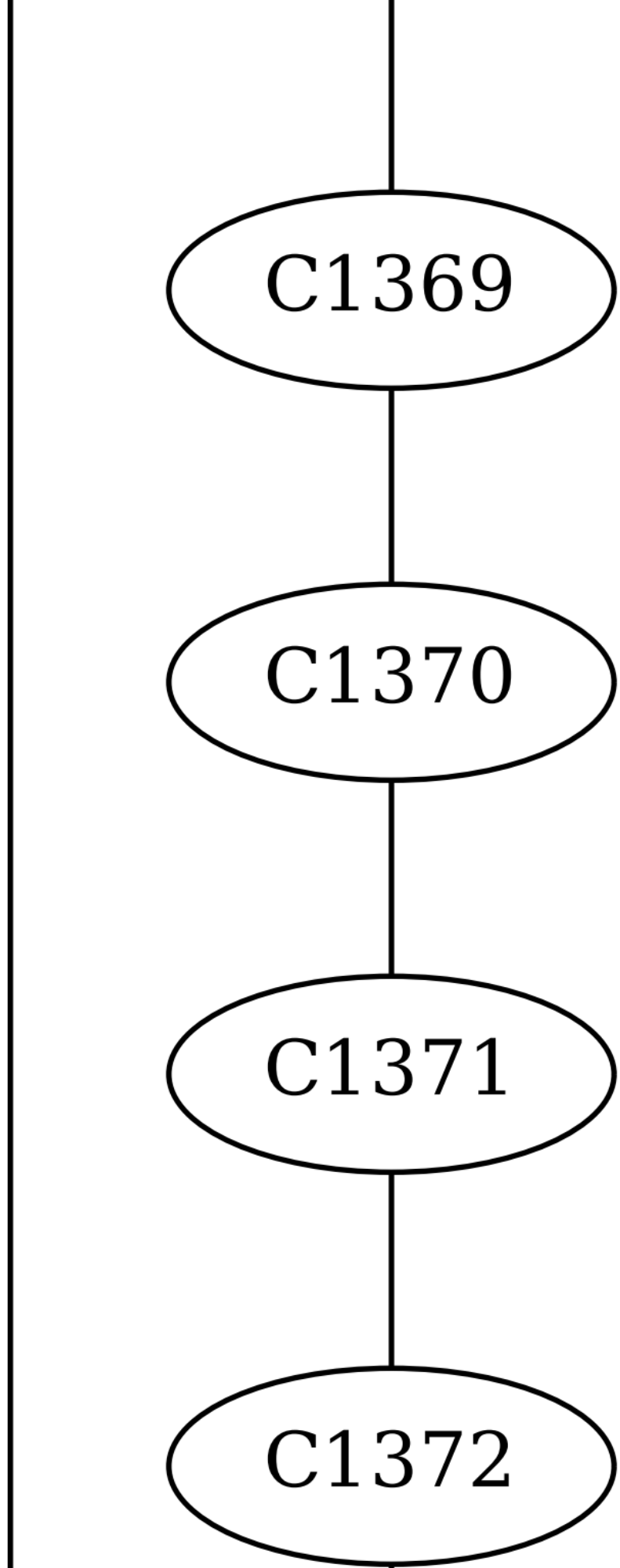
C1369
C1370
C1371
C1372

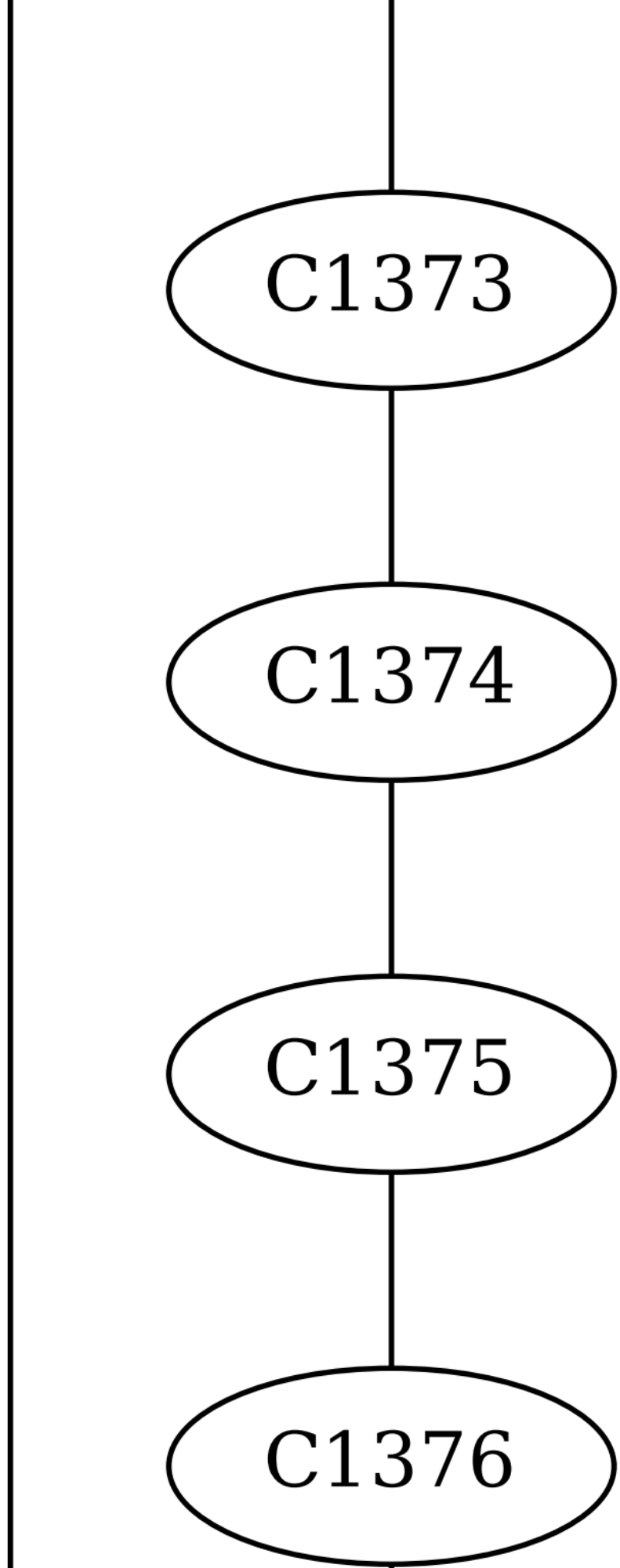
C1373
C1374
C1375
C1376

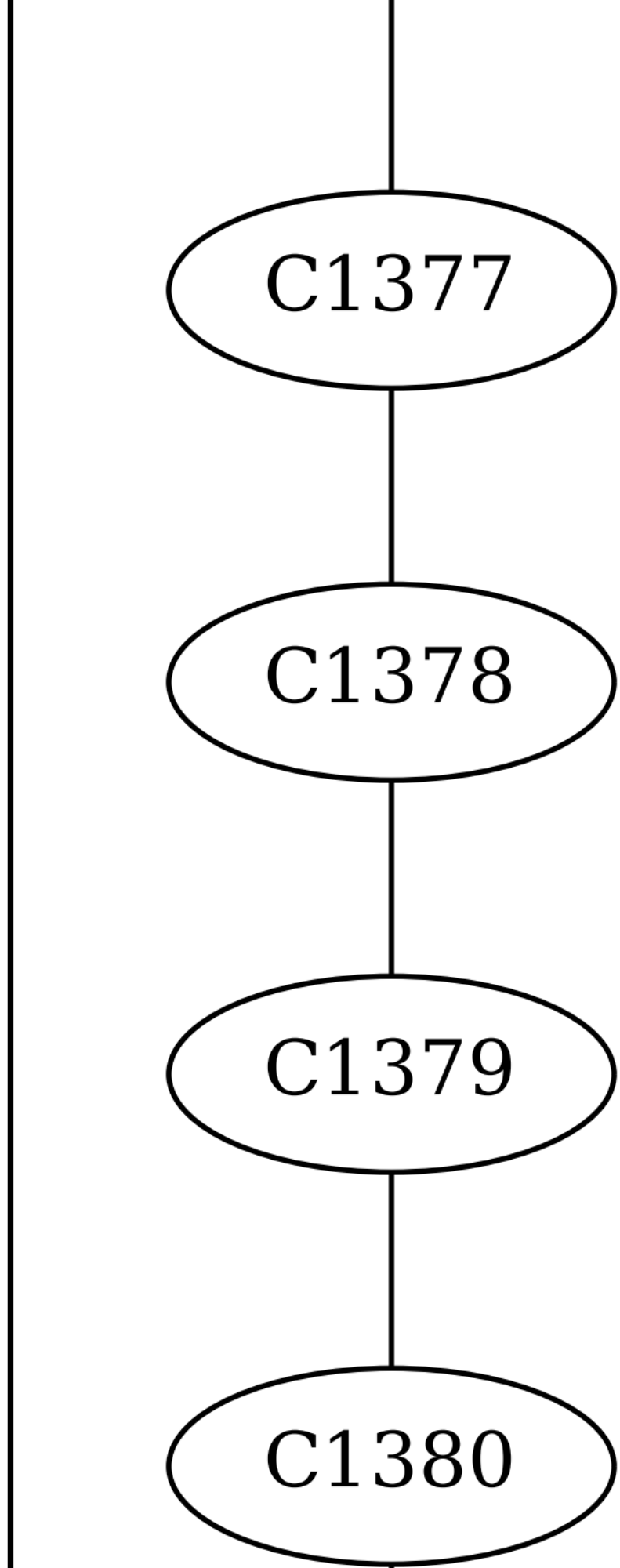
C1377
C1378
C1379
C1380

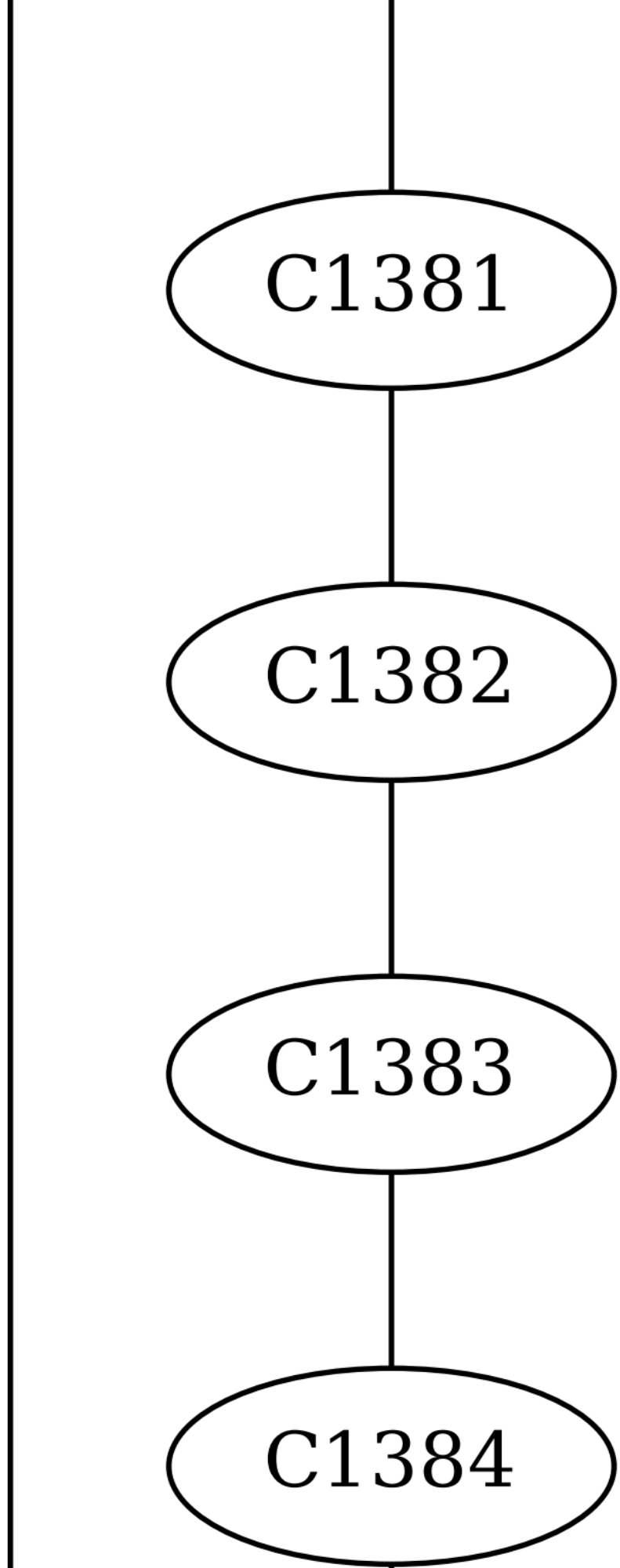
C1381
C1382
C1383
C1384

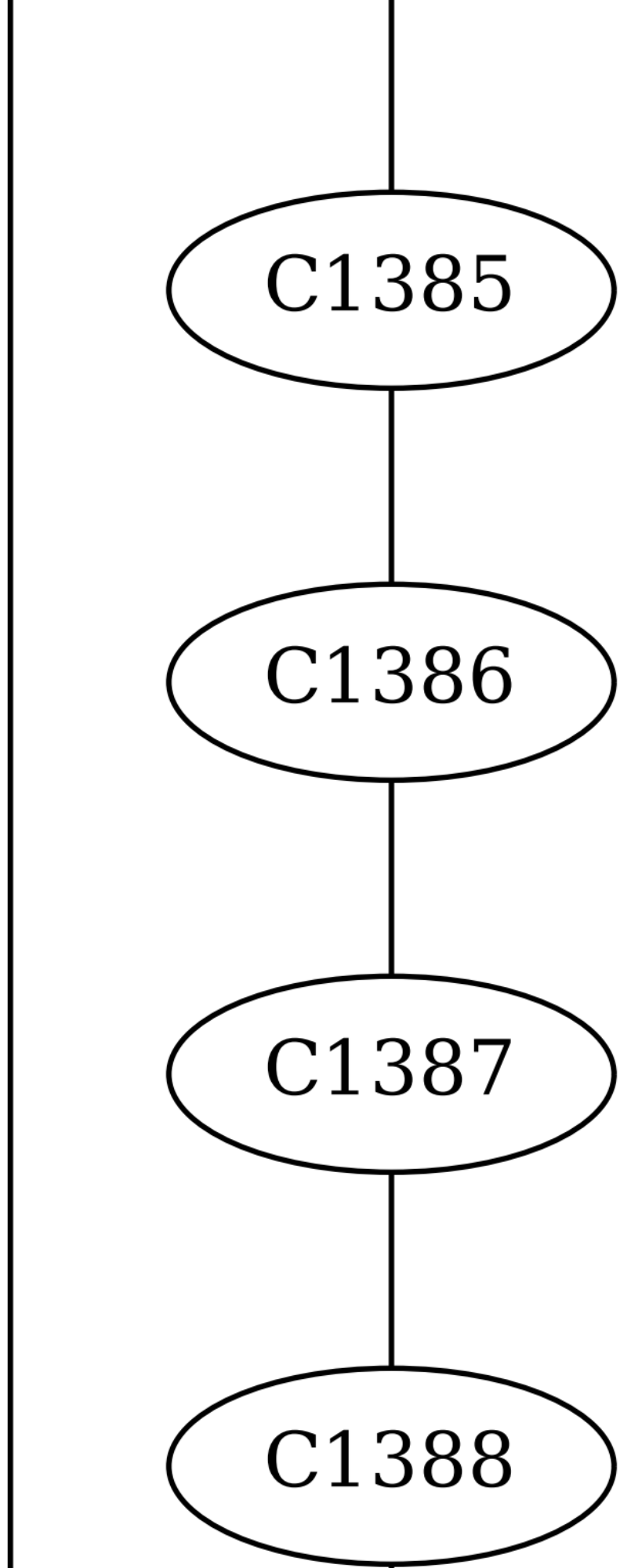
C1385
C1386
C1387
C1388

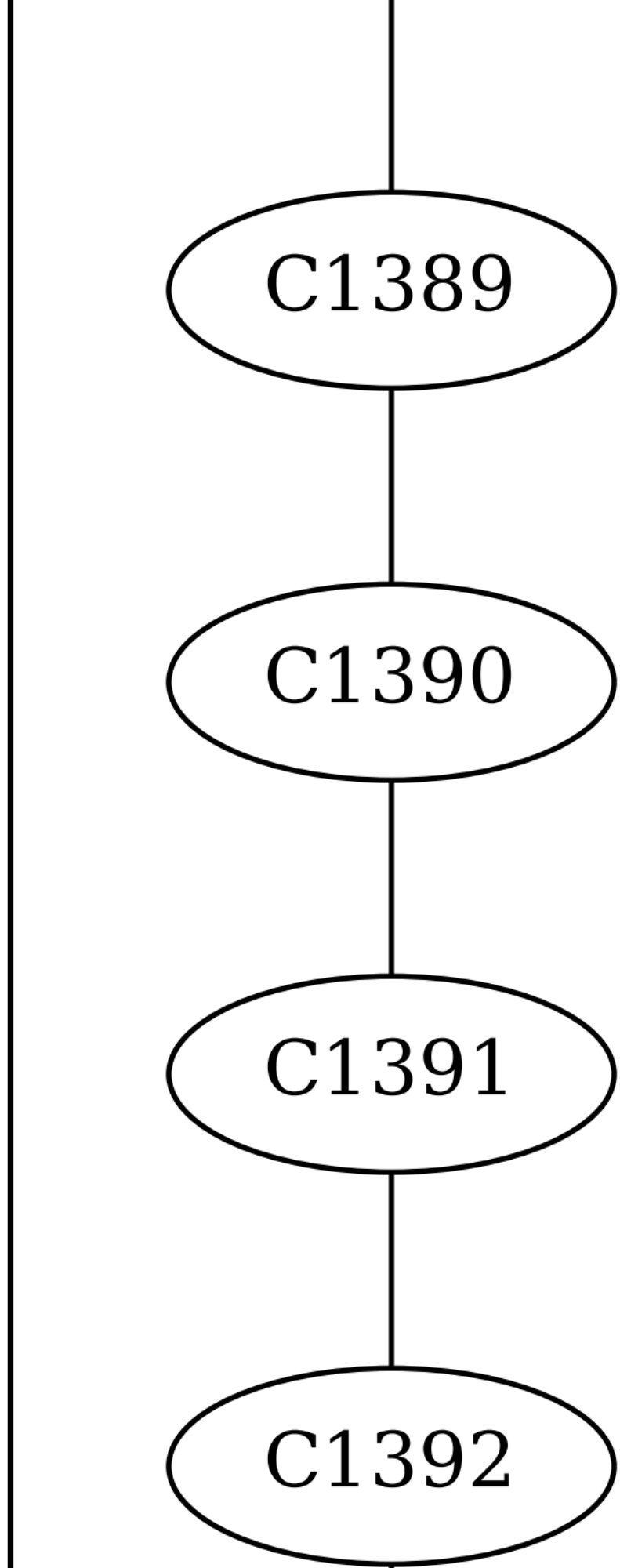
C1389
C1390
C1391
C1392

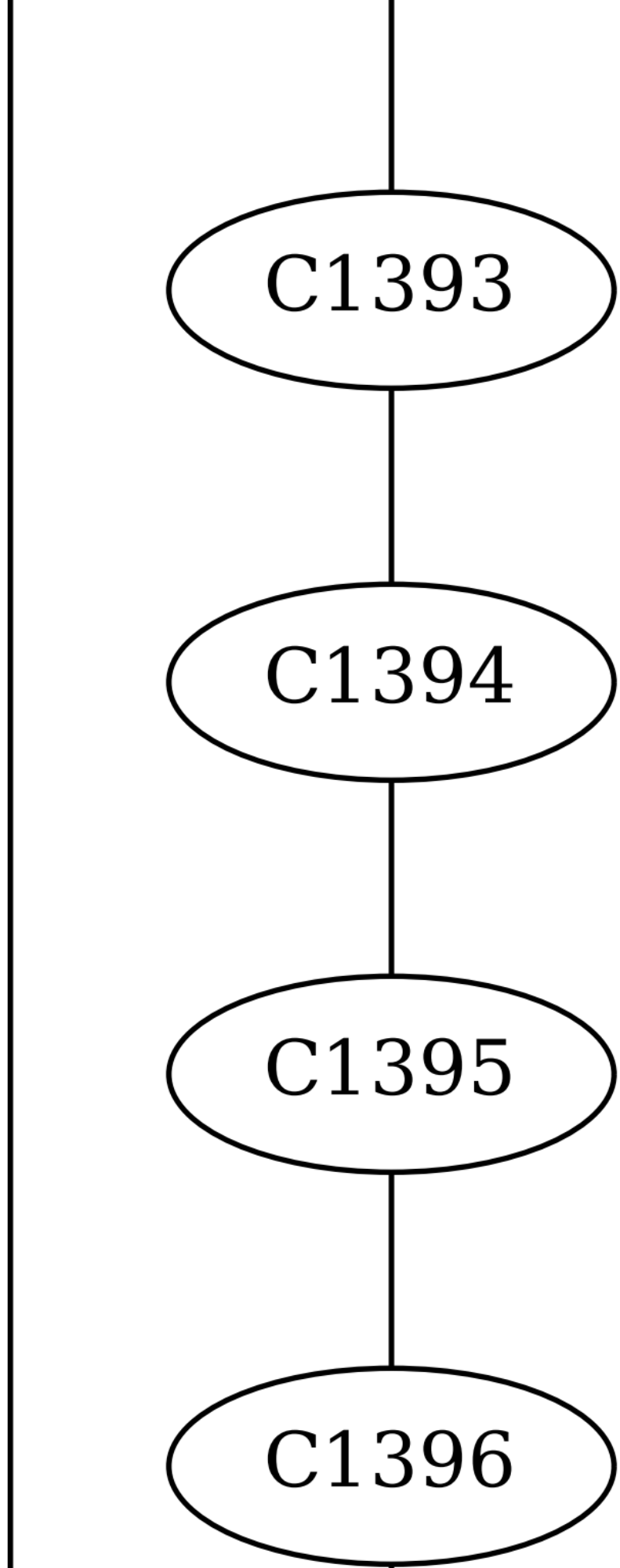
C1393
C1394
C1395
C1396

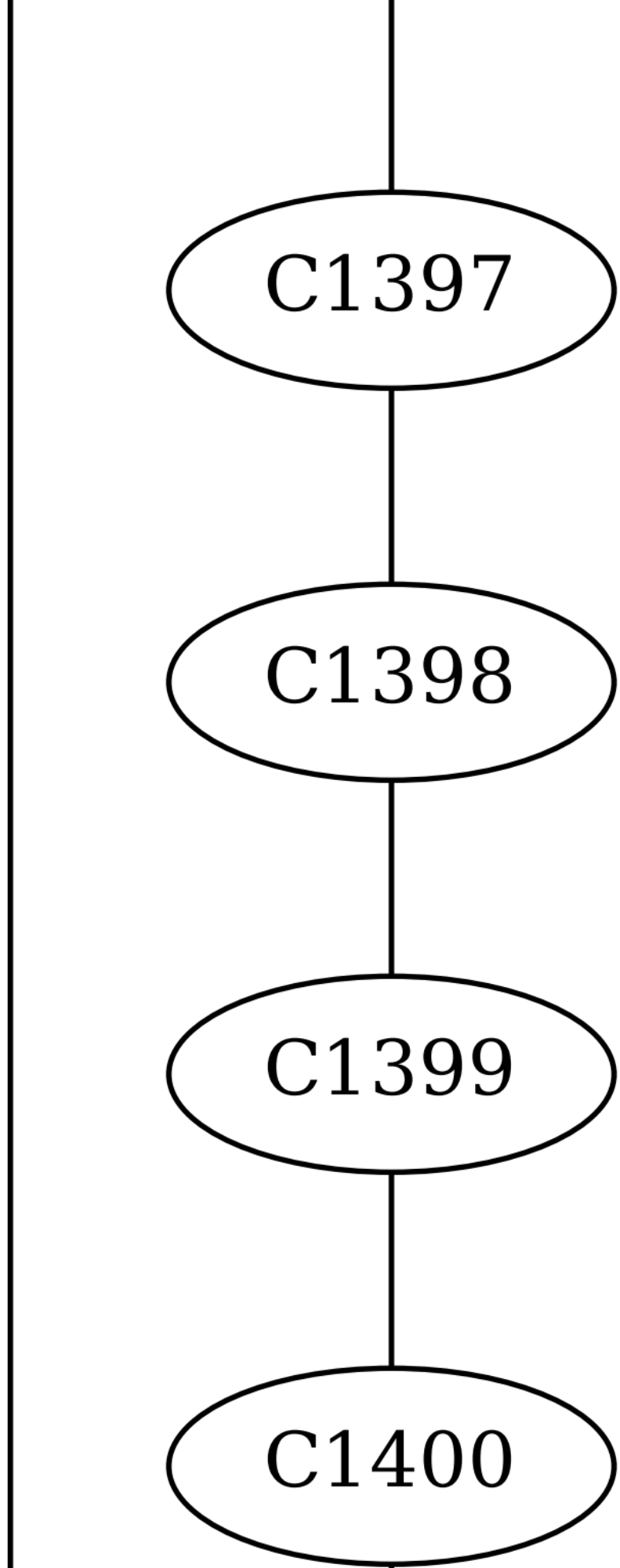
C1397
C1398
C1399
C1400

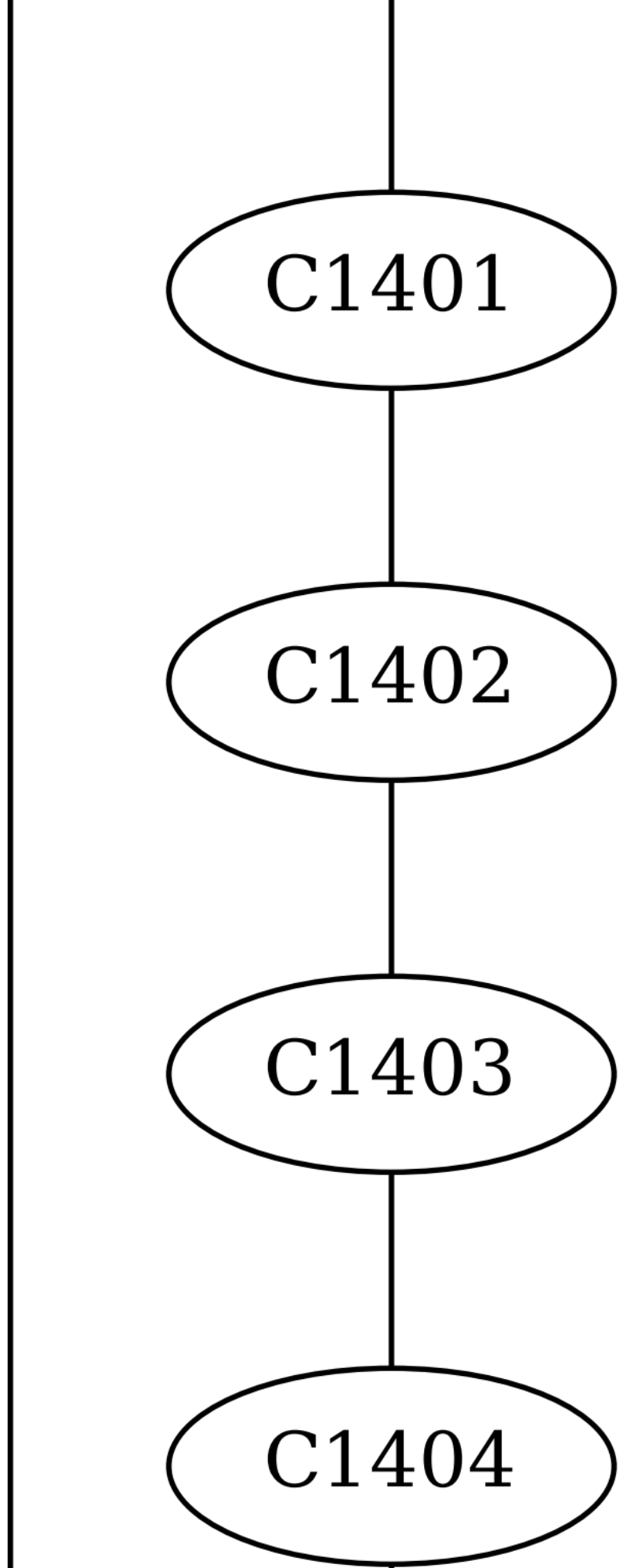
C1401
C1402
C1403
C1404

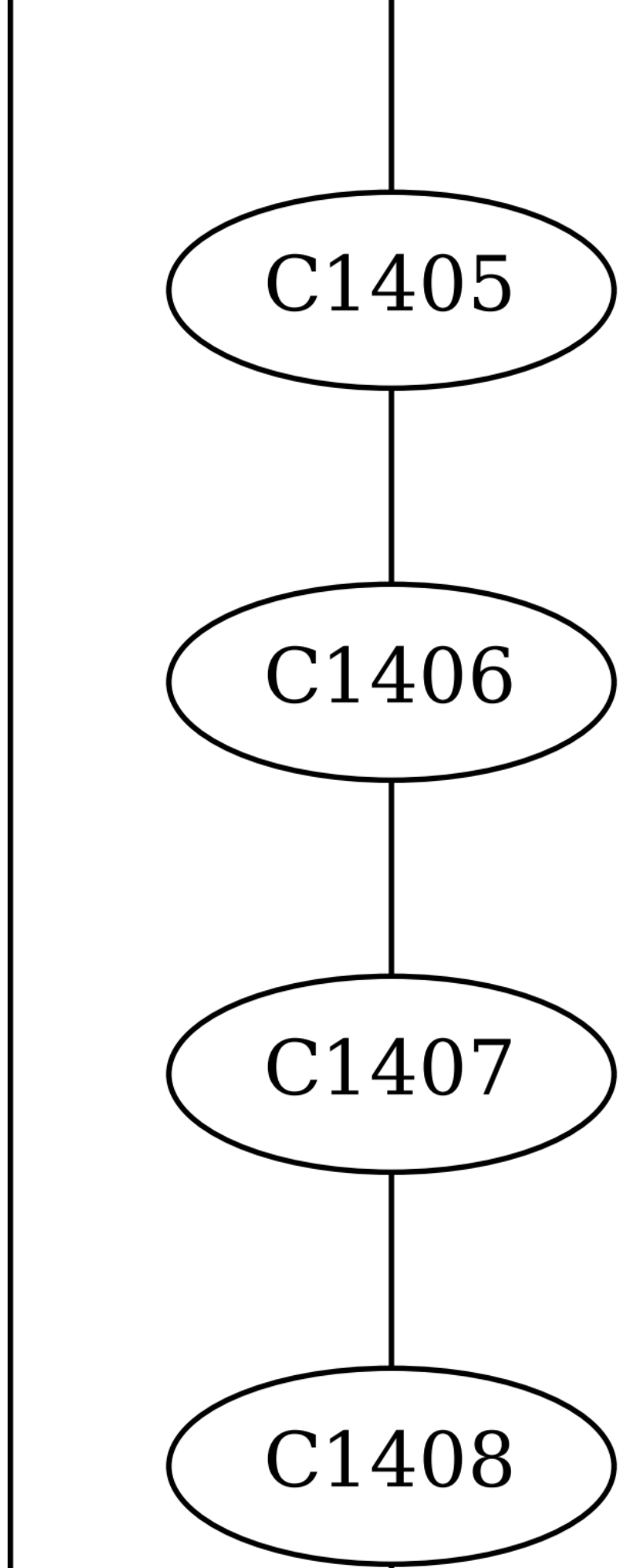
C1405
C1406
C1407
C1408

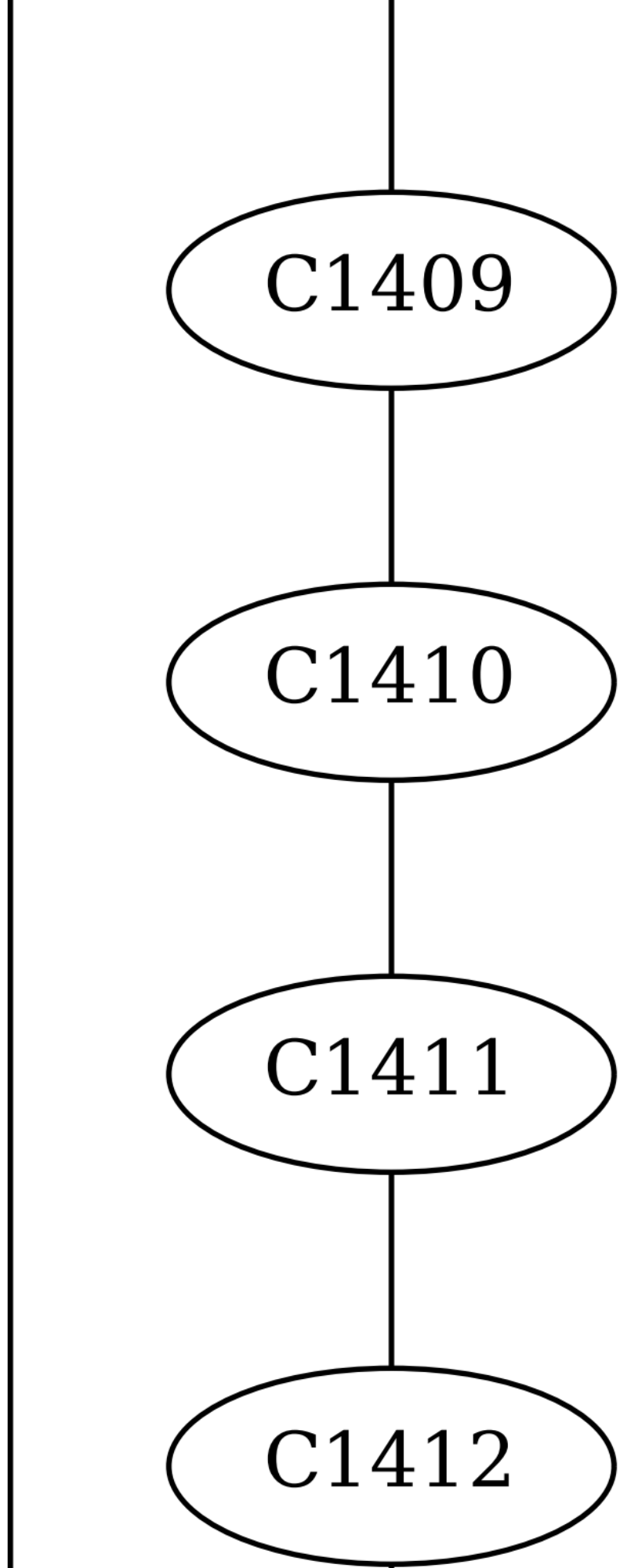
C1409
C1410
C1411
C1412

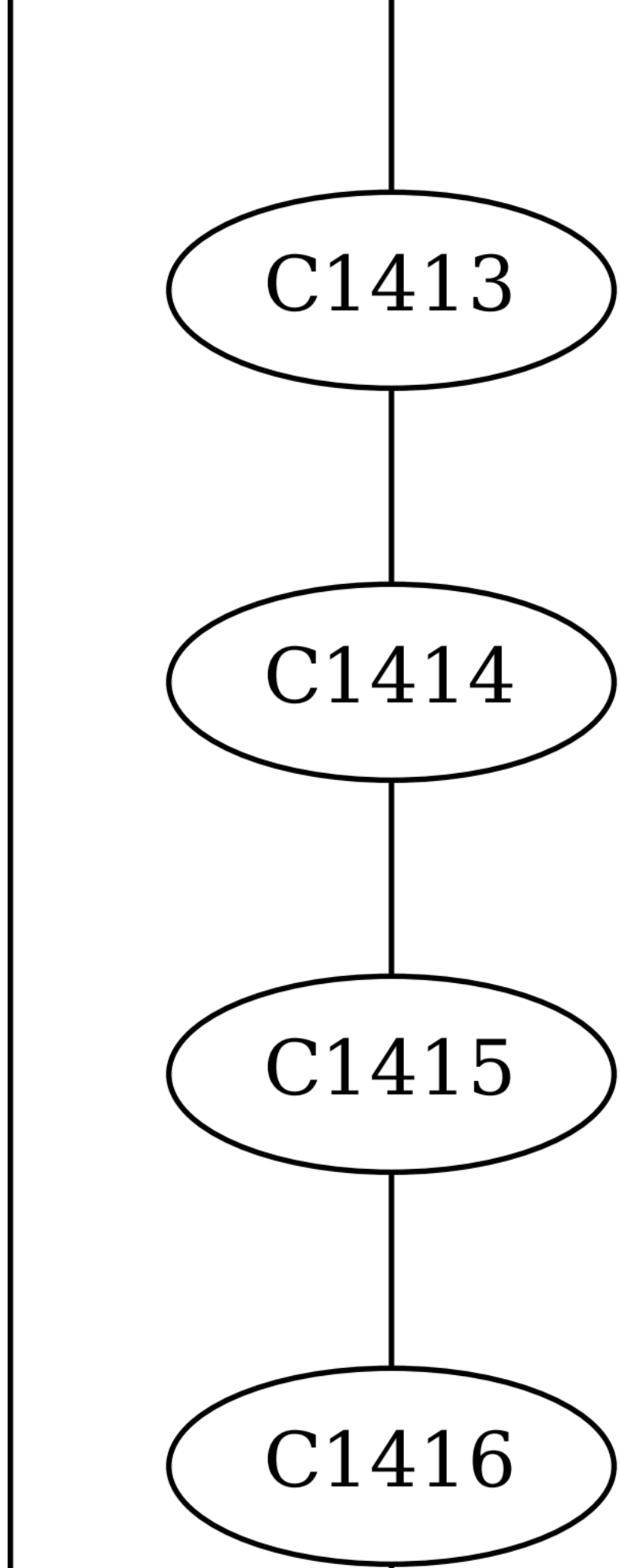
C1413
C1414
C1415
C1416

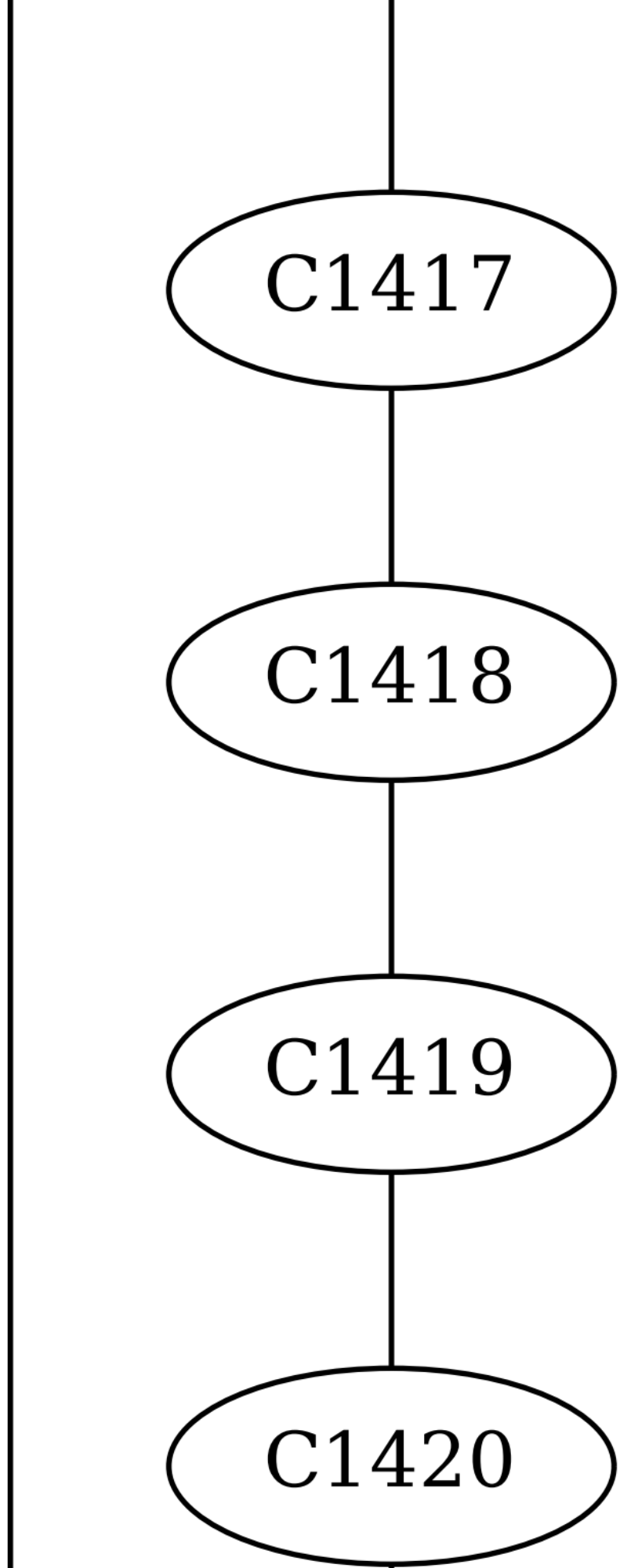
C1417
C1418
C1419
C1420

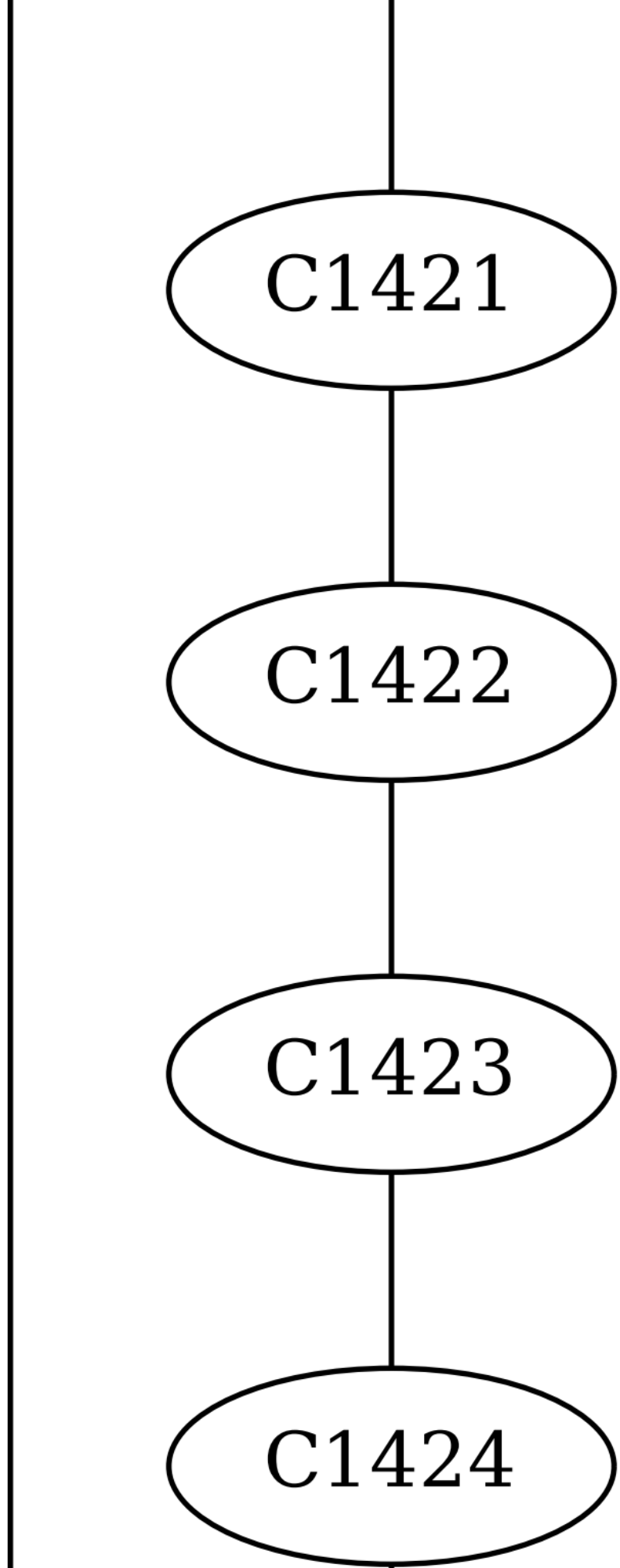
C1421
C1422
C1423
C1424

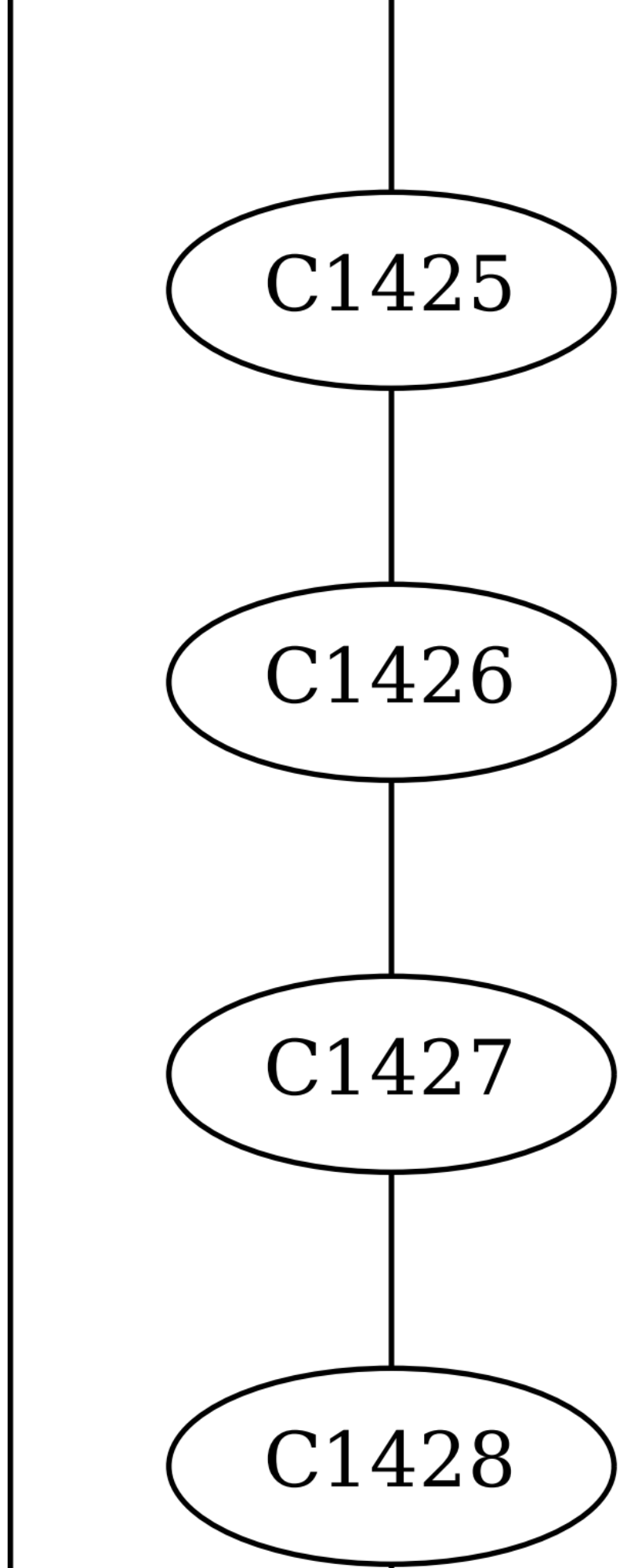
C1425
C1426
C1427
C1428

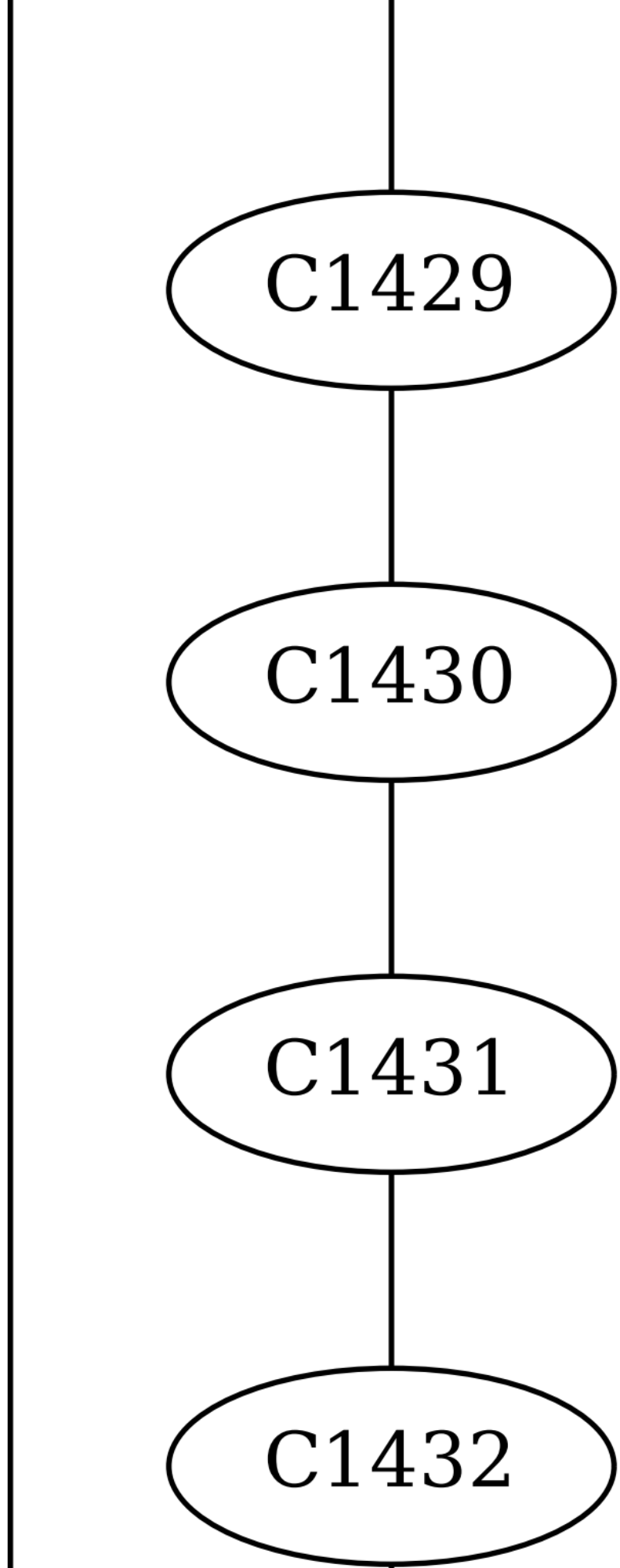
C1429
C1430
C1431
C1432

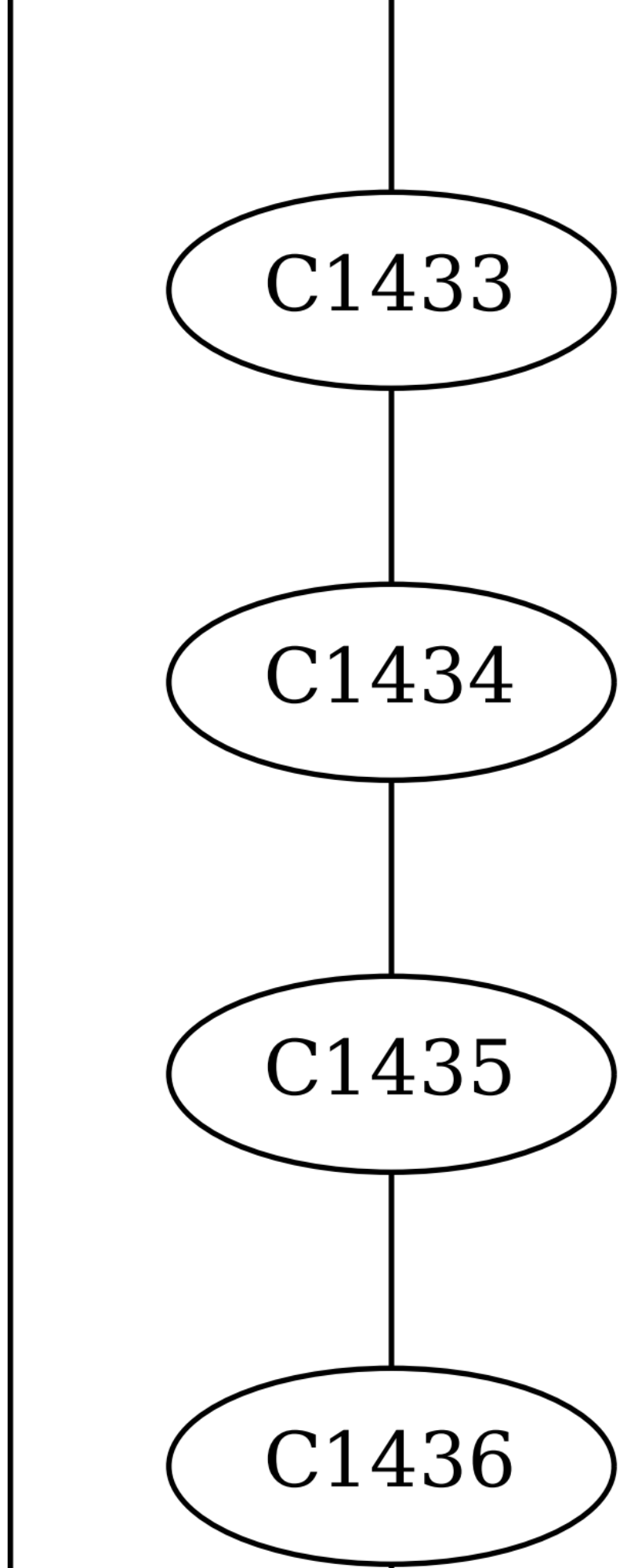
C1433
C1434
C1435
C1436

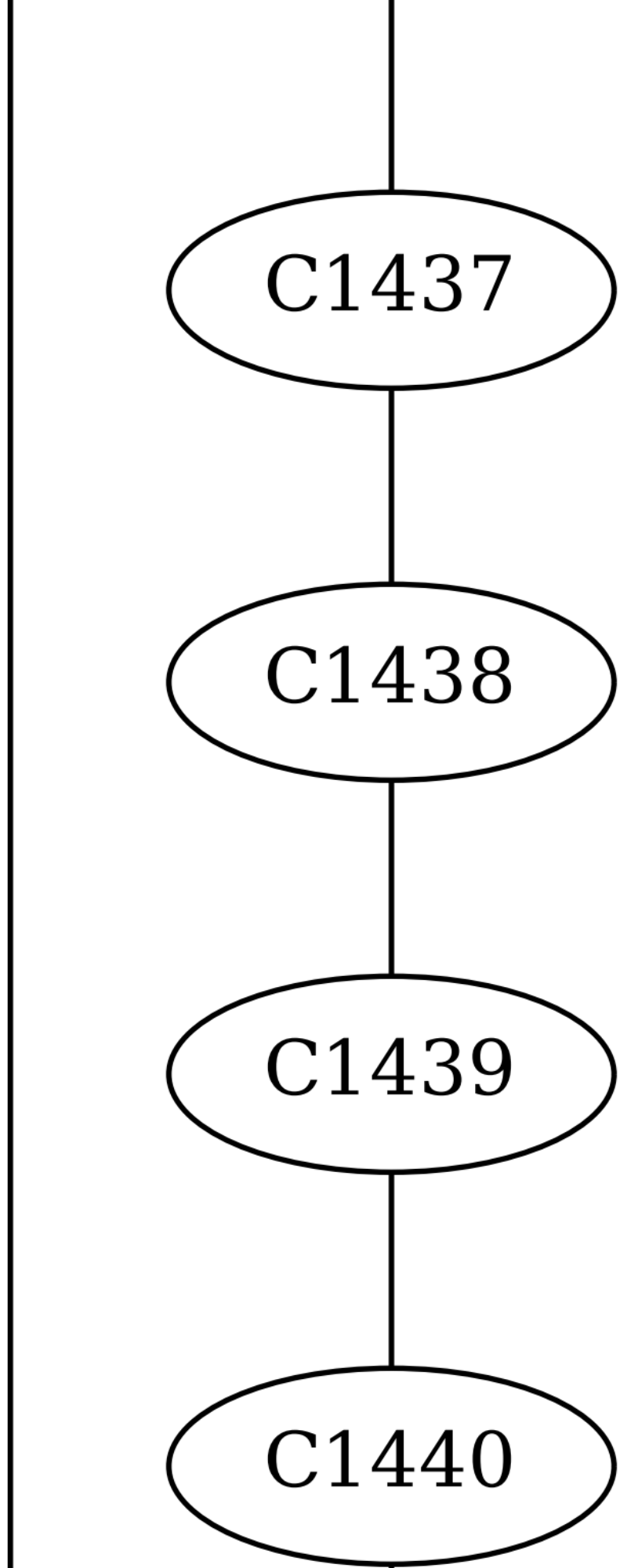
C1437
C1438
C1439
C1440

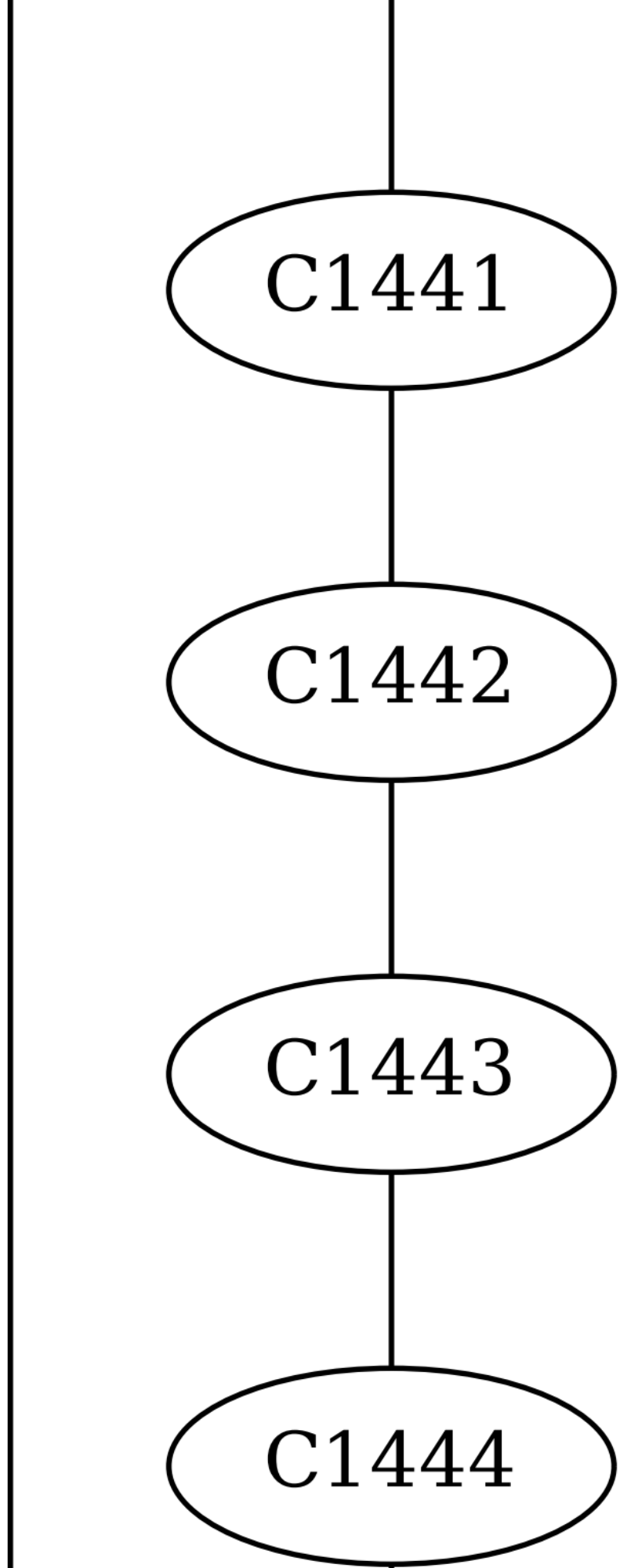
C1441
C1442
C1443
C1444

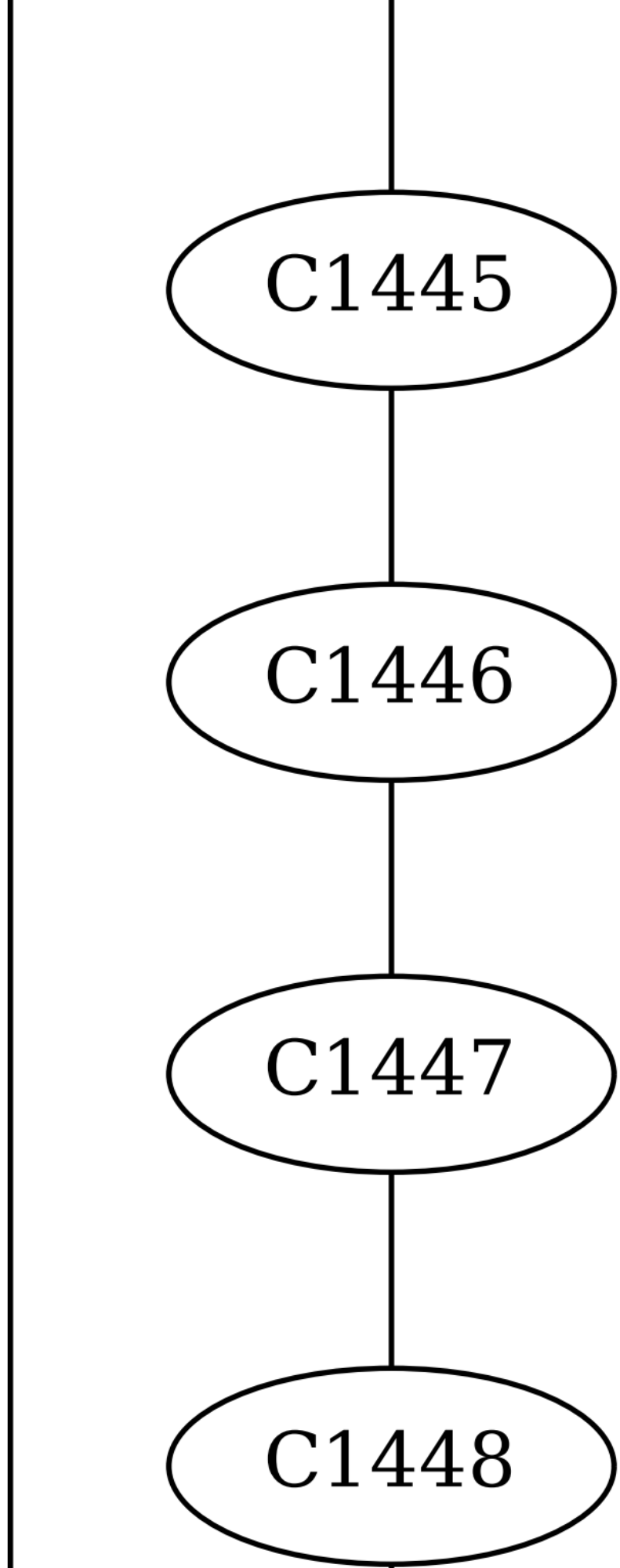
C1445
C1446
C1447
C1448

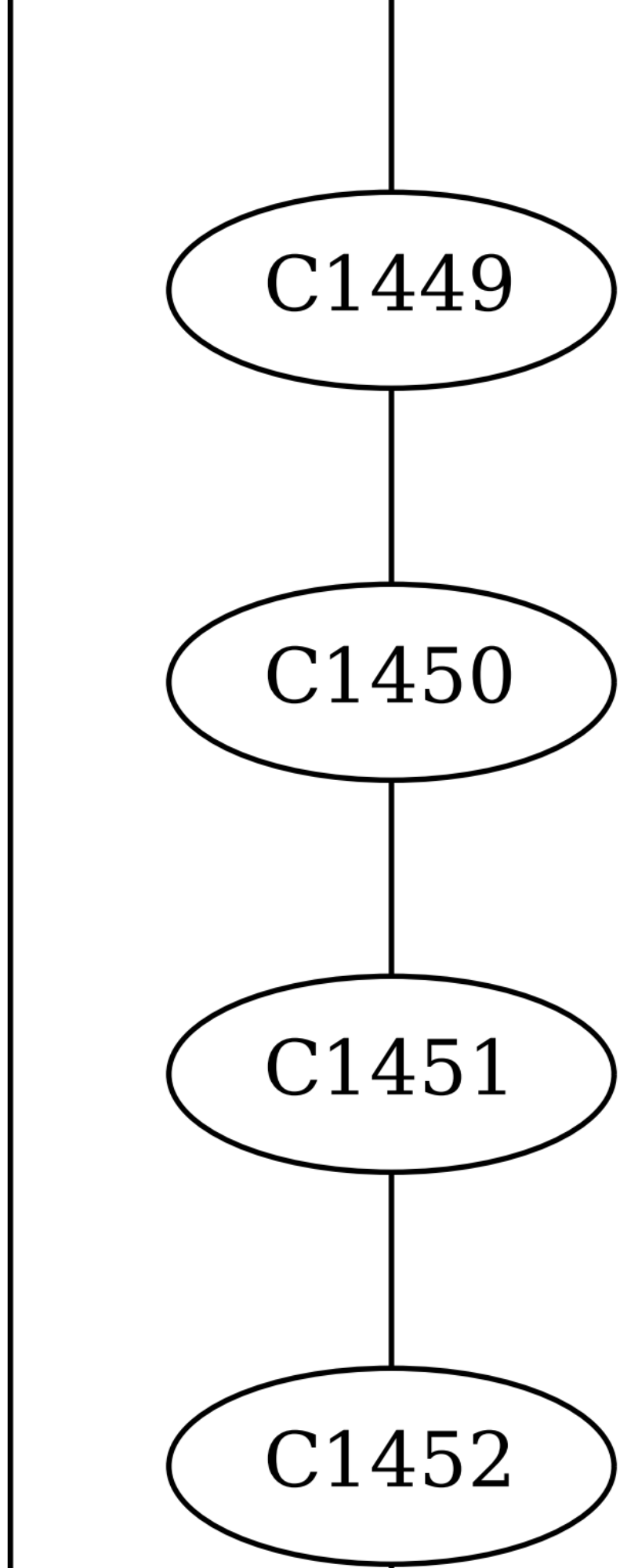
C1449
C1450
C1451
C1452

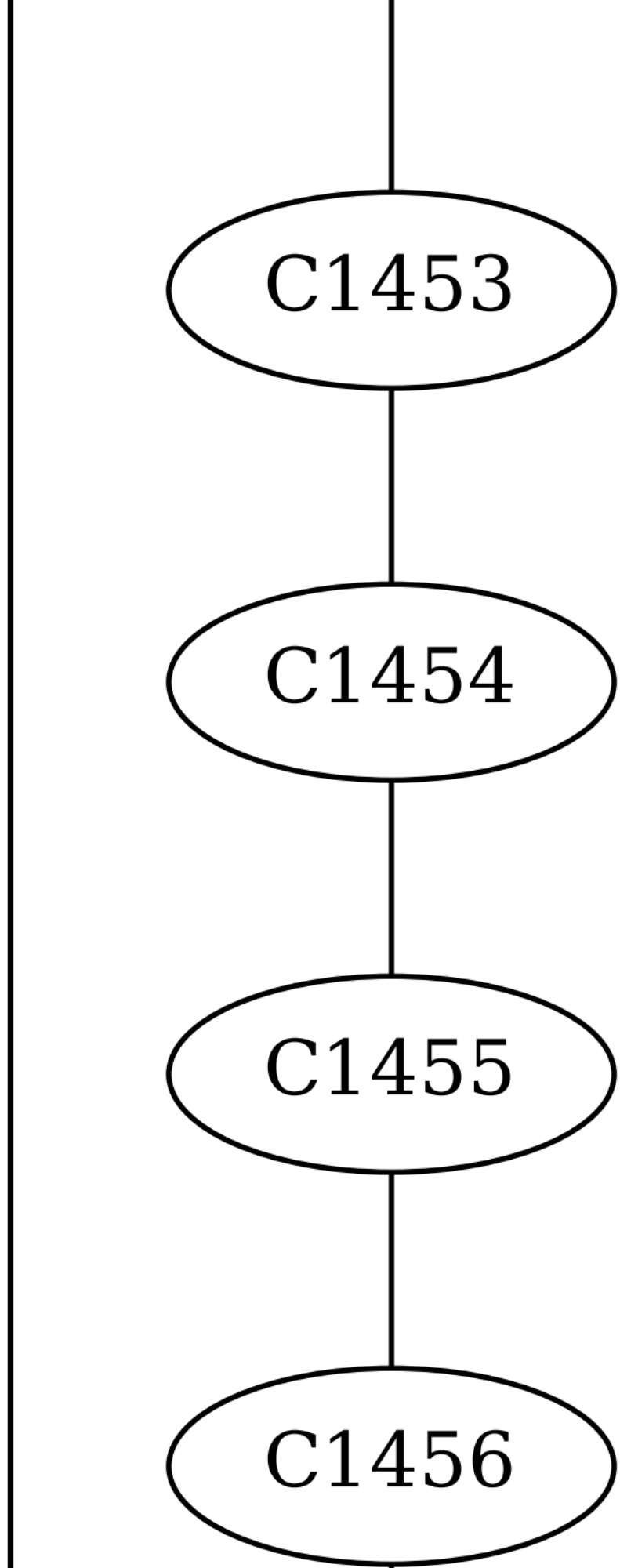
C1453
C1454
C1455
C1456

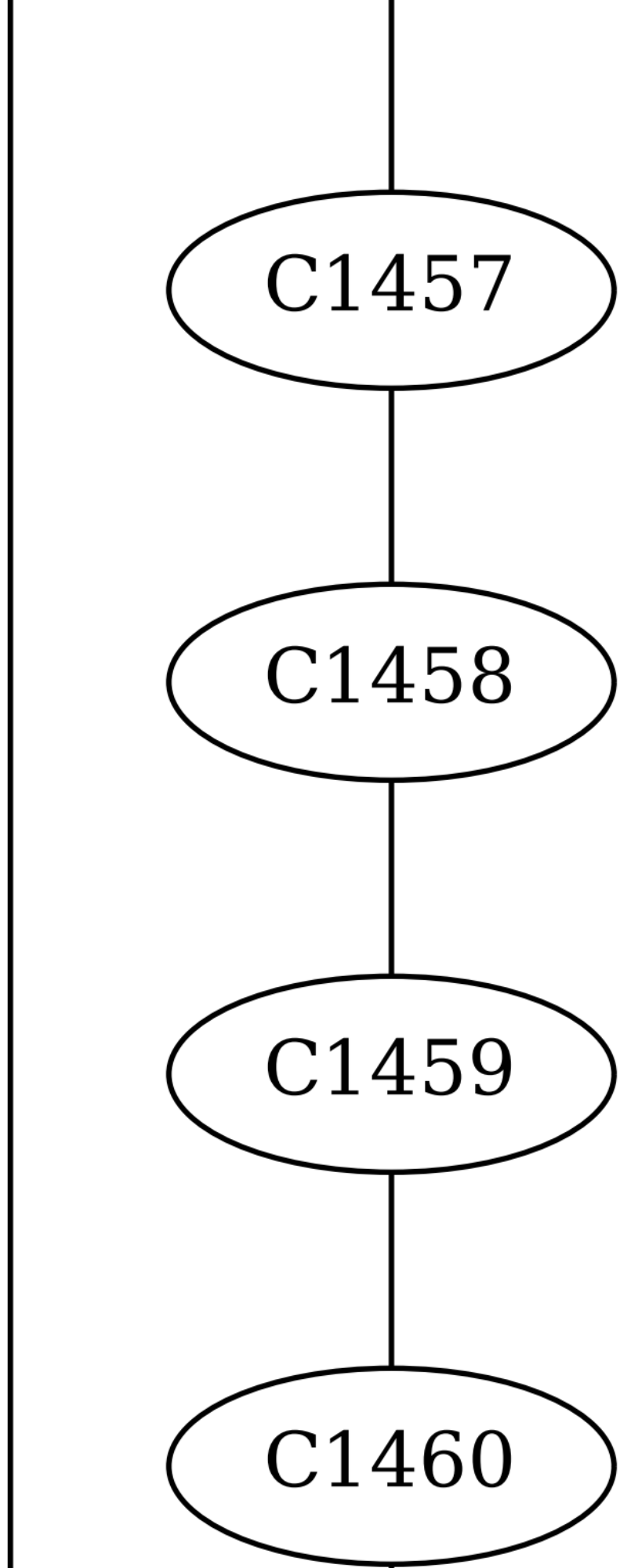
C1457
C1458
C1459
C1460

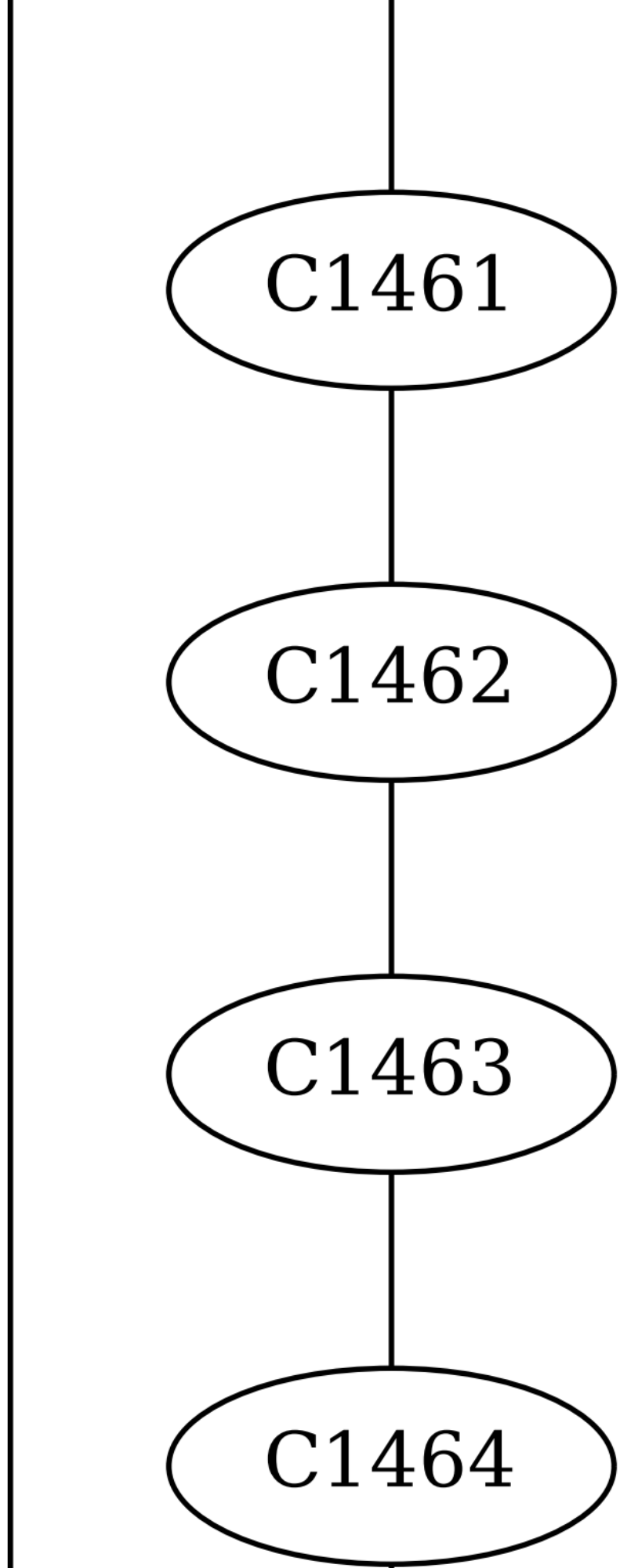
C1461
C1462
C1463
C1464

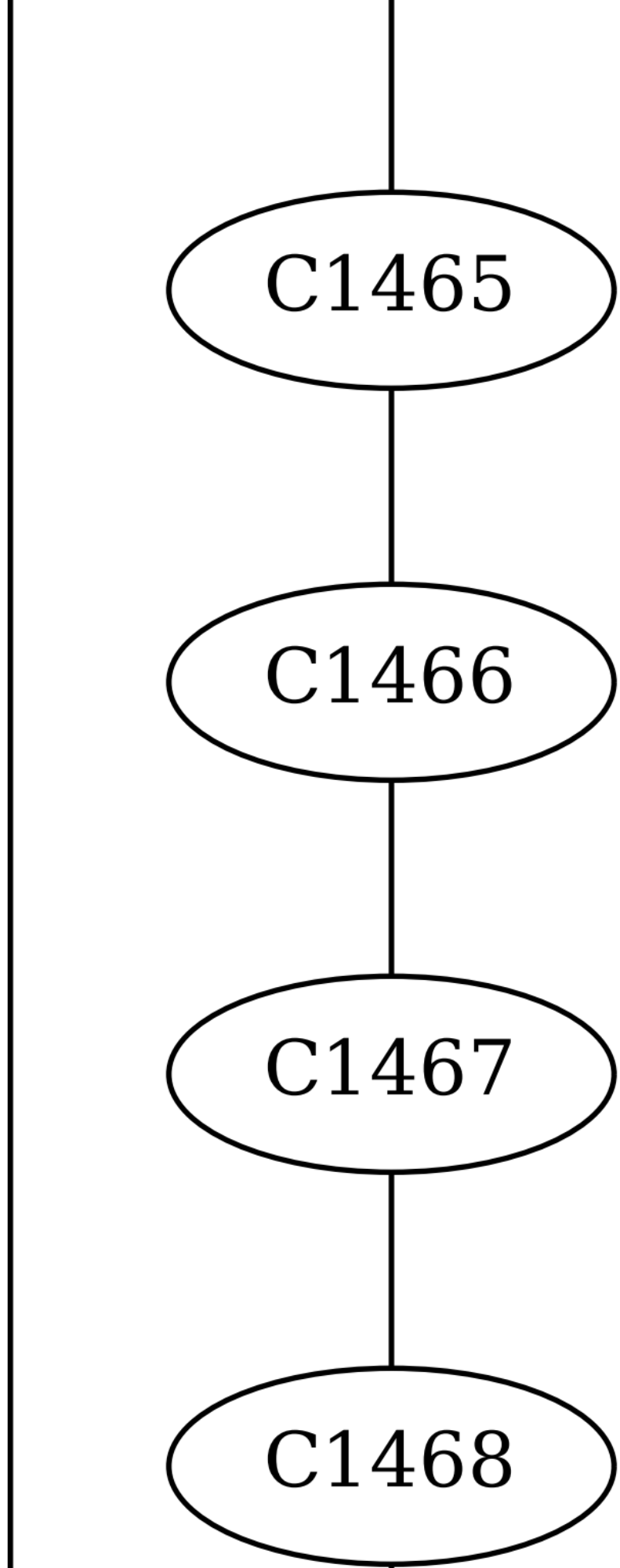
C1465
C1466
C1467
C1468

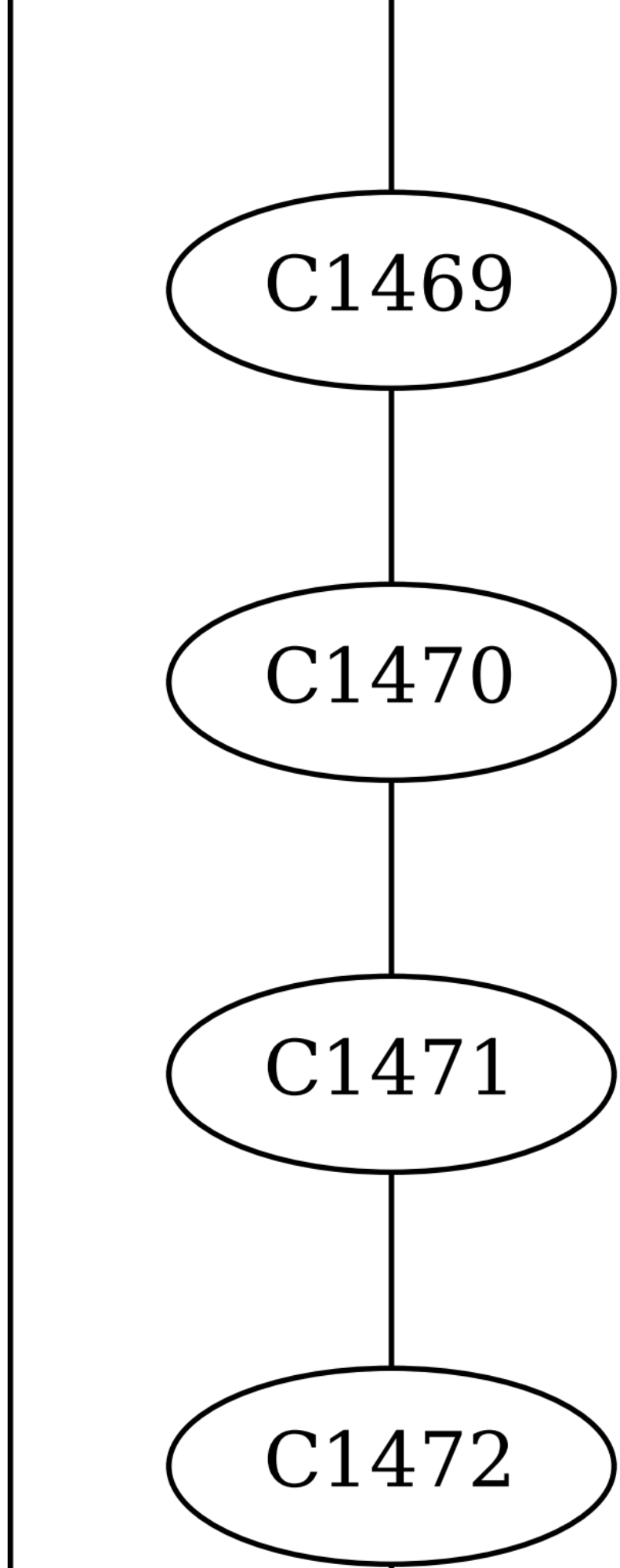
C1469
C1470
C1471
C1472

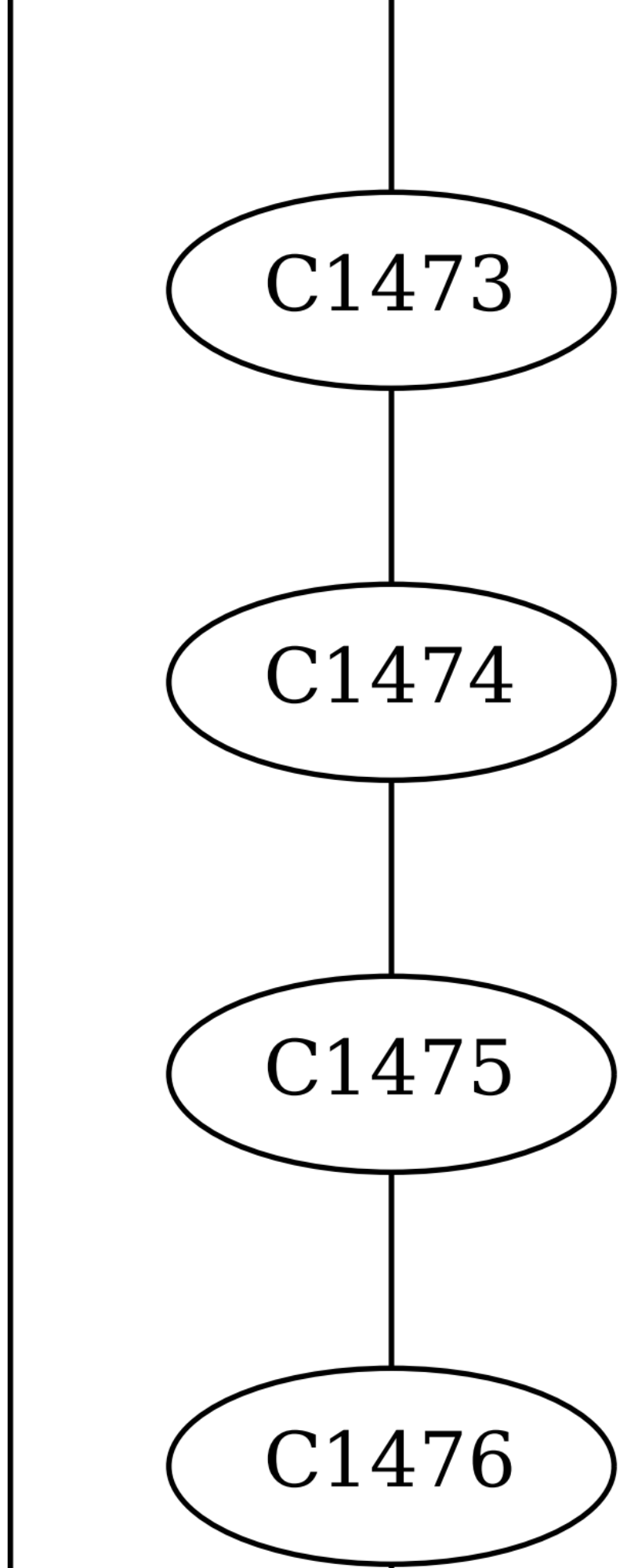
C1473
C1474
C1475
C1476

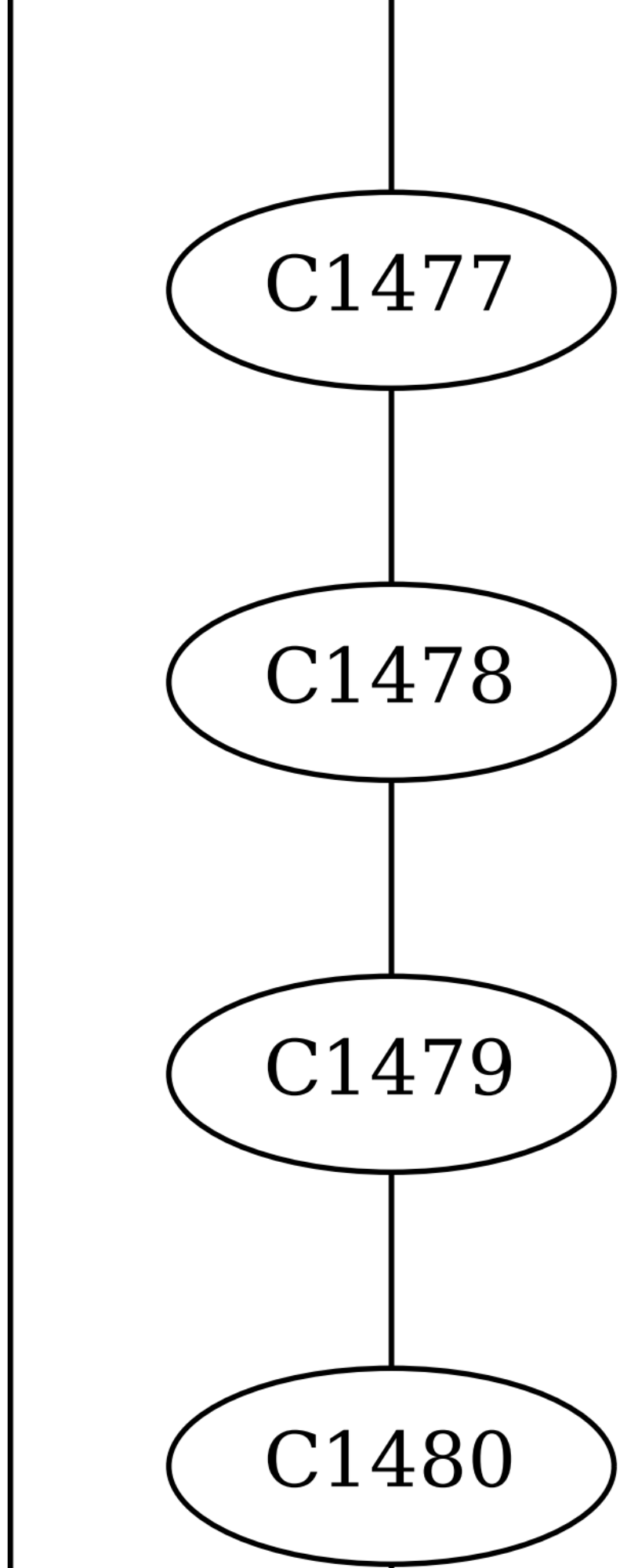
C1477
C1478
C1479
C1480

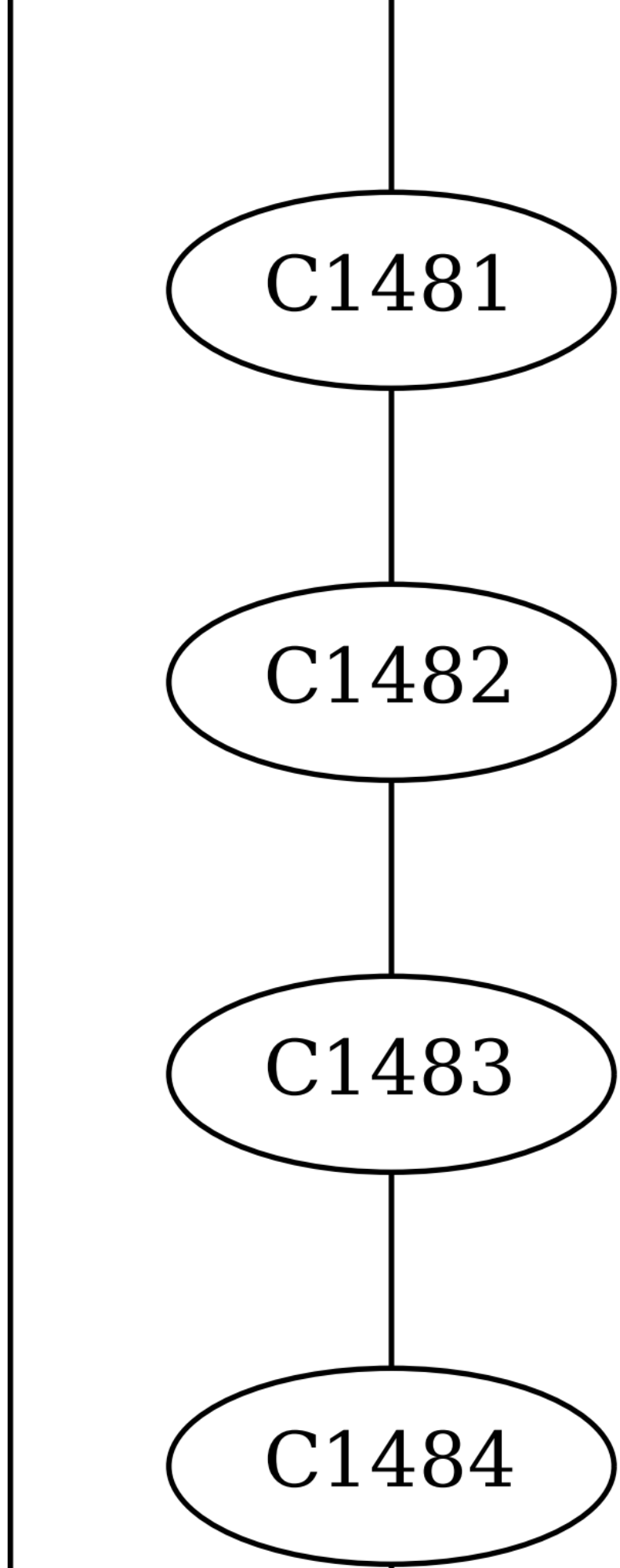
C1481
C1482
C1483
C1484

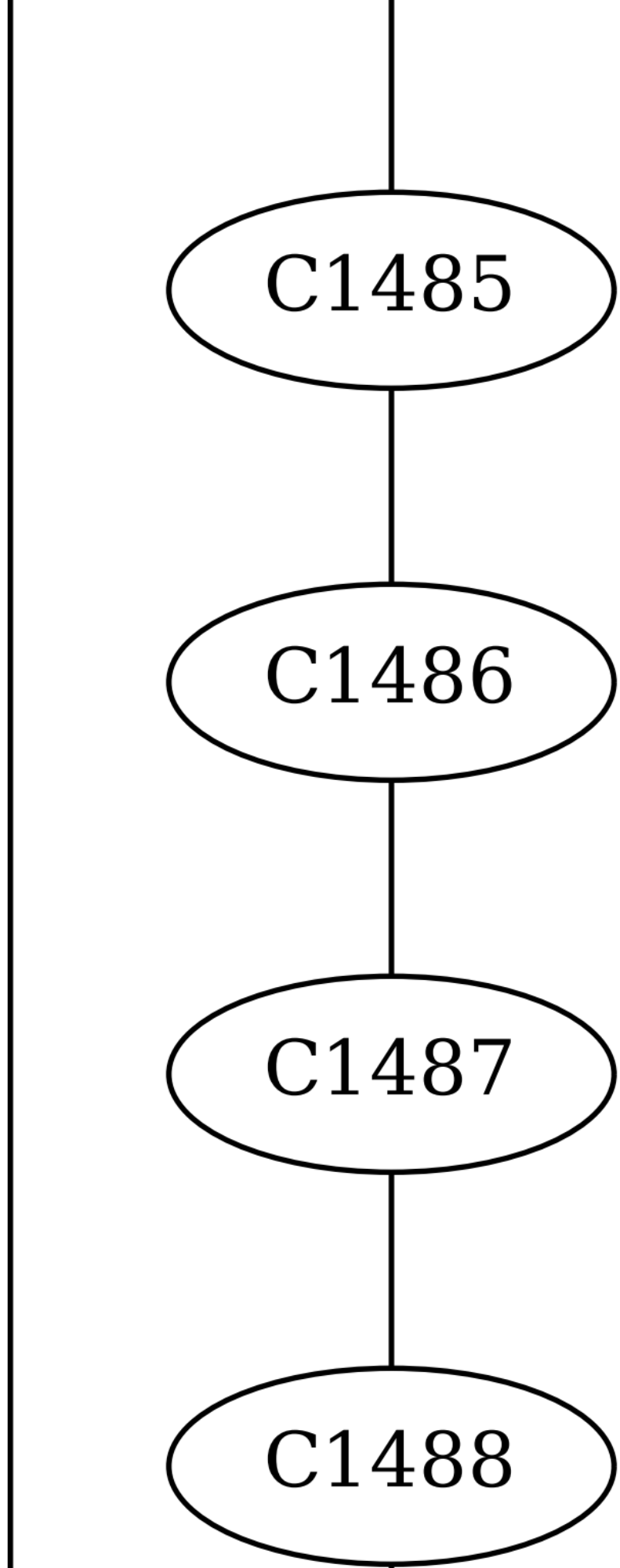
C1485
C1486
C1487
C1488

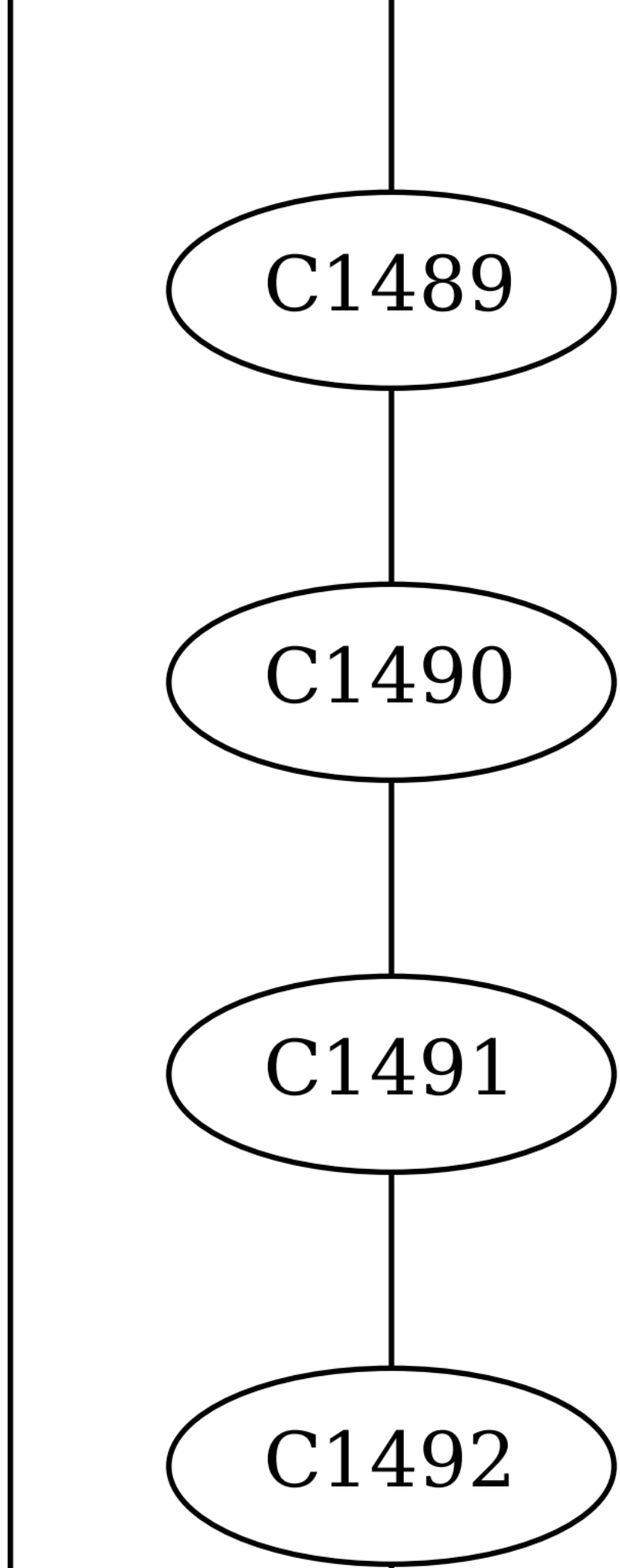
C1489
C1490
C1491
C1492

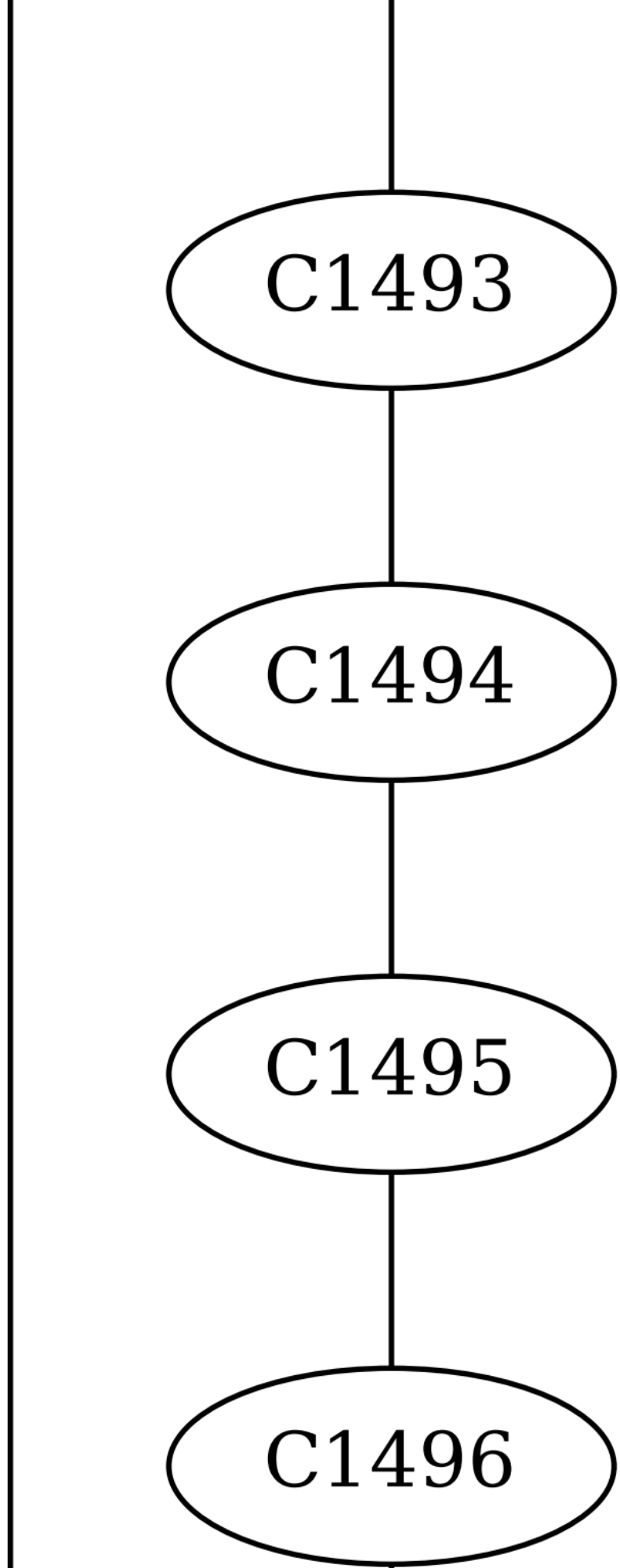
C1493
C1494
C1495
C1496

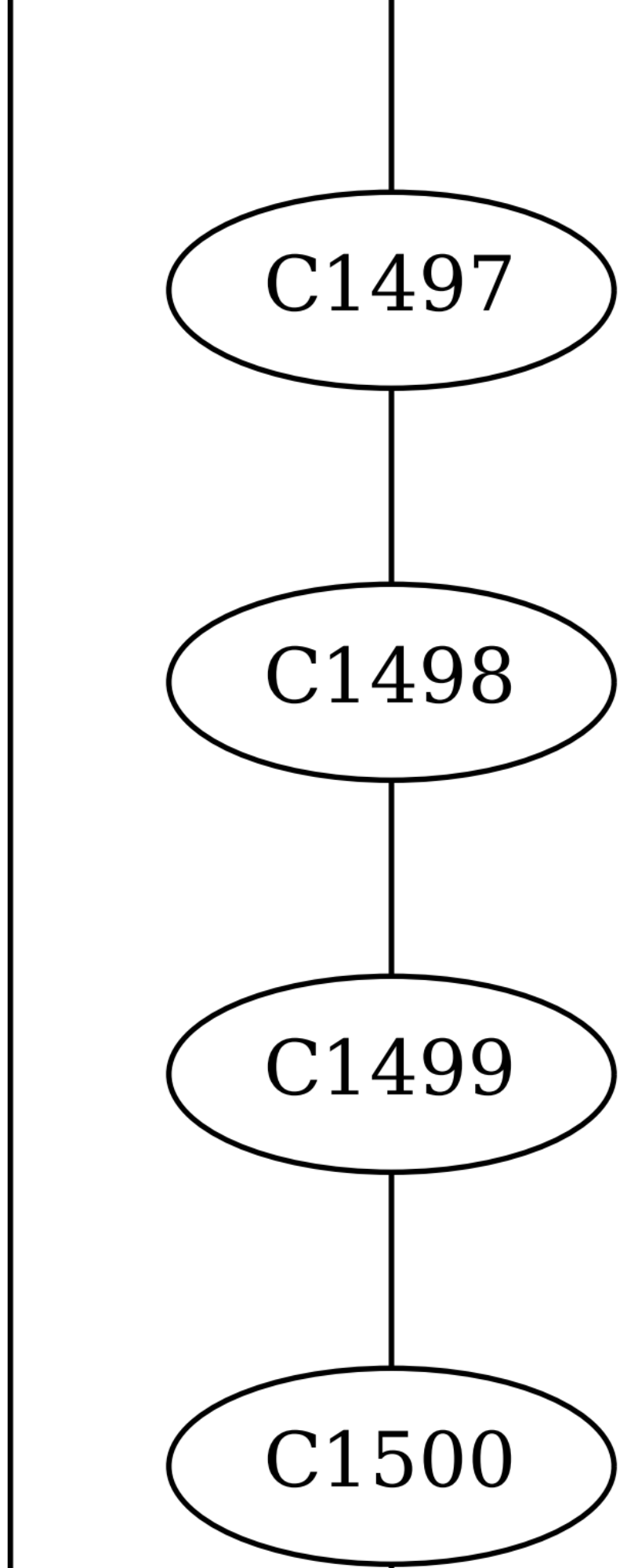
C1497
C1498
C1499
C1500

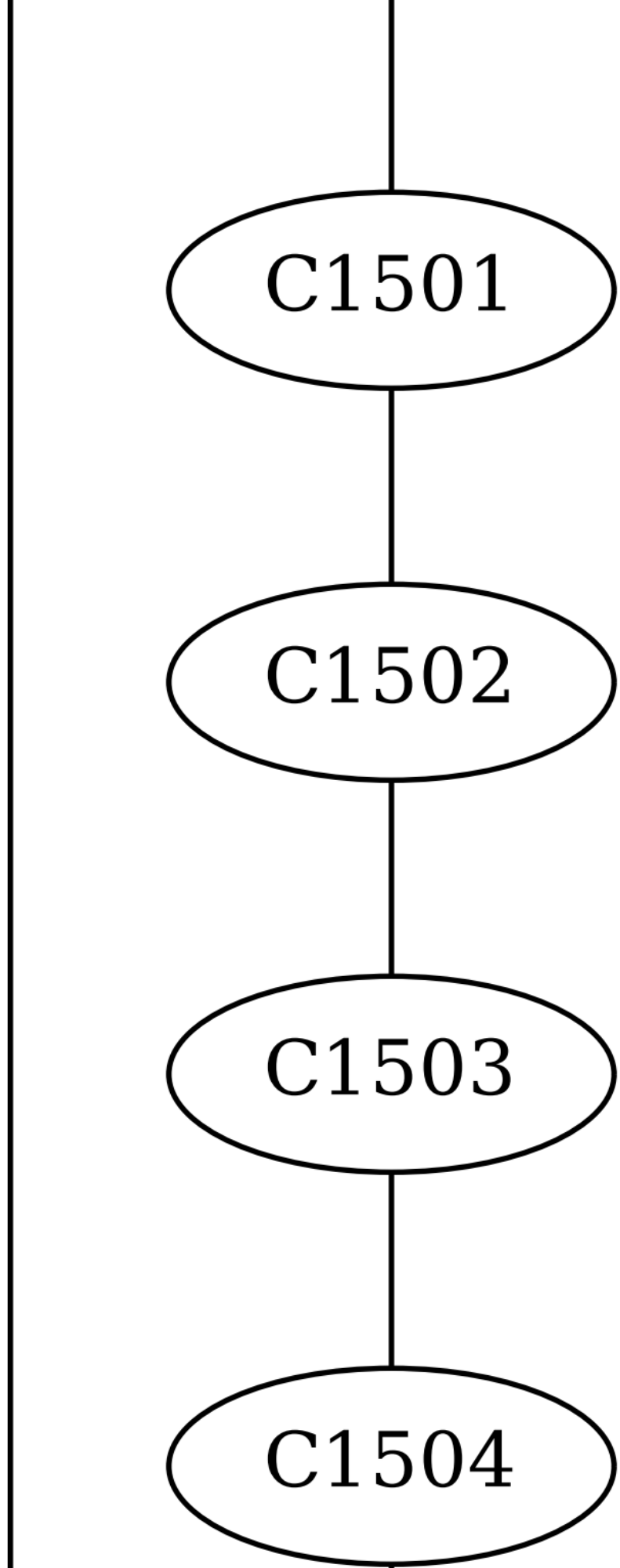
C1501
C1502
C1503
C1504

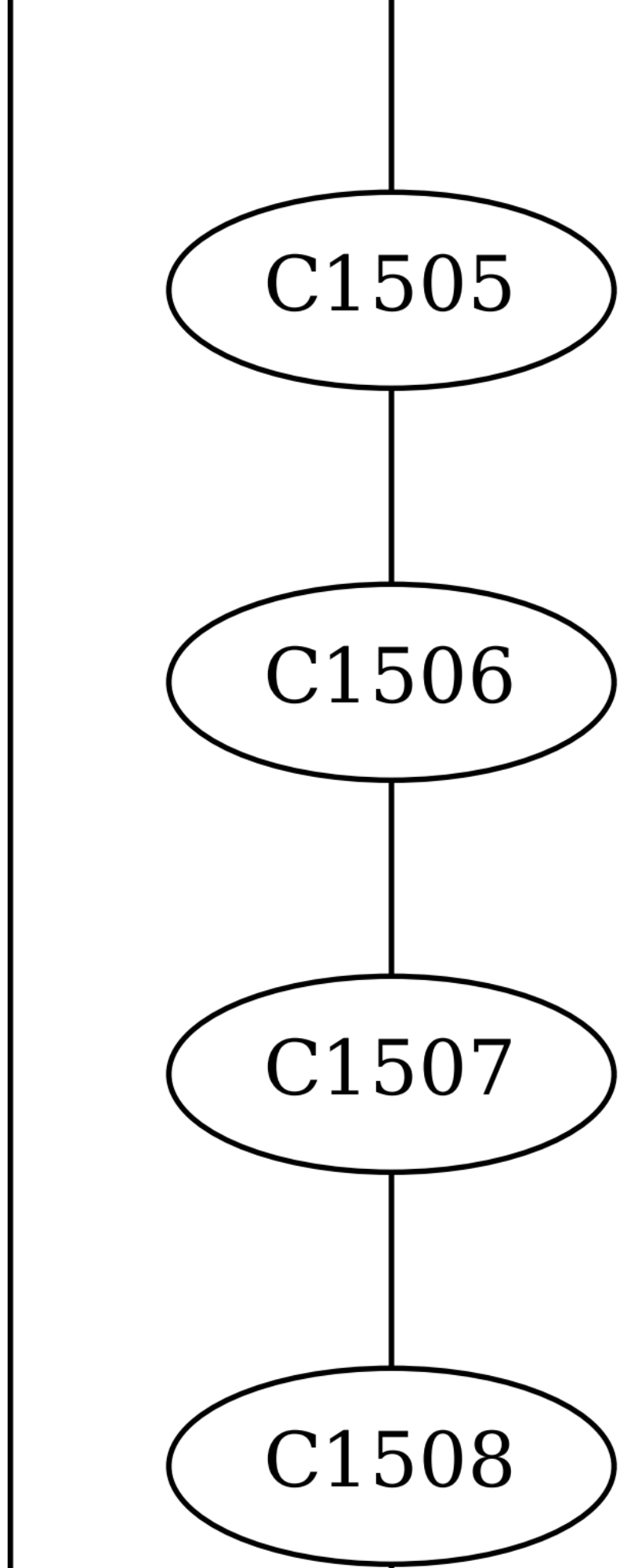
C1505
C1506
C1507
C1508

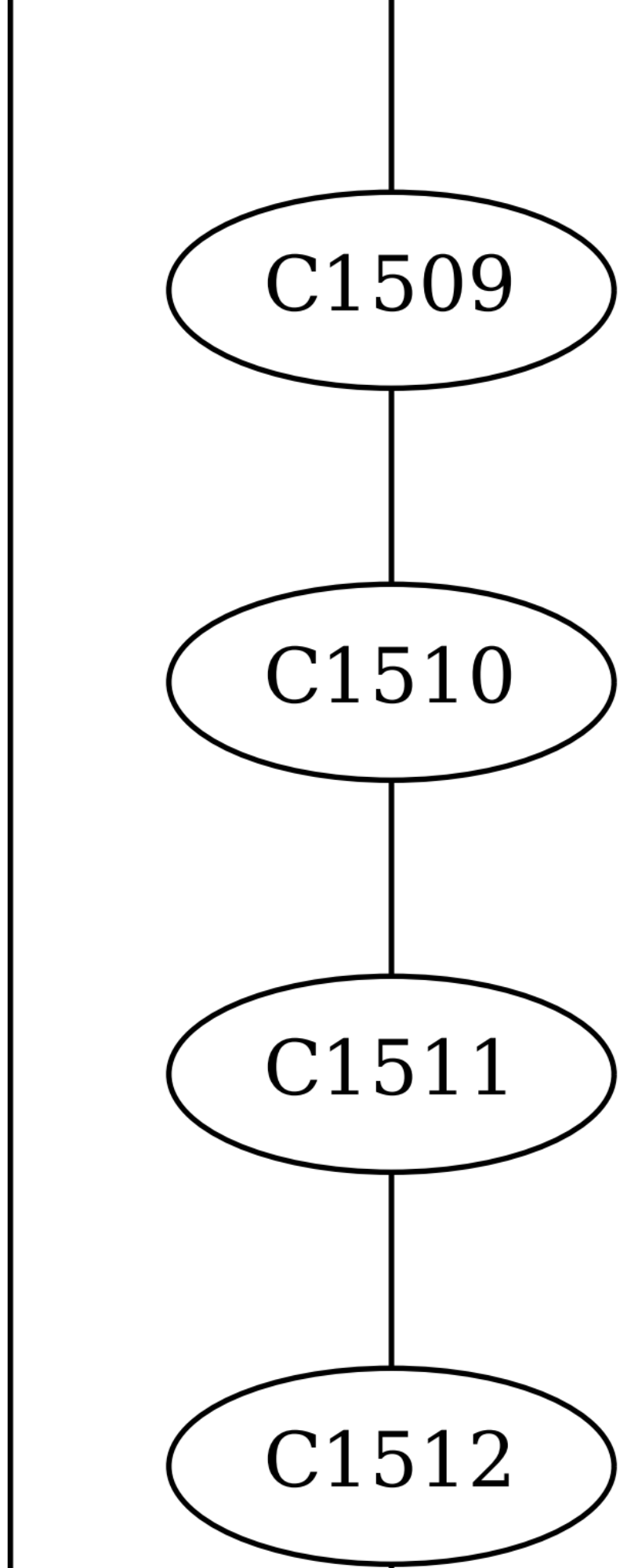
C1509
C1510
C1511
C1512

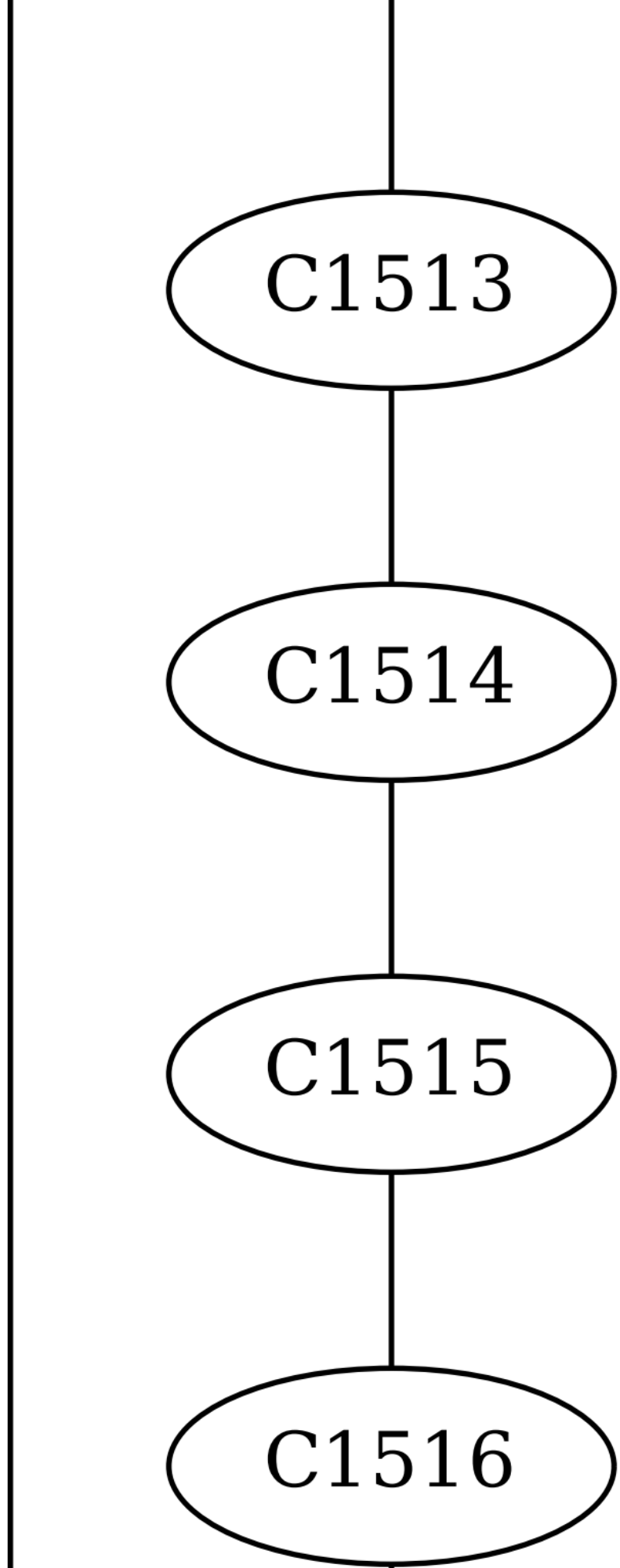
C1513
C1514
C1515
C1516

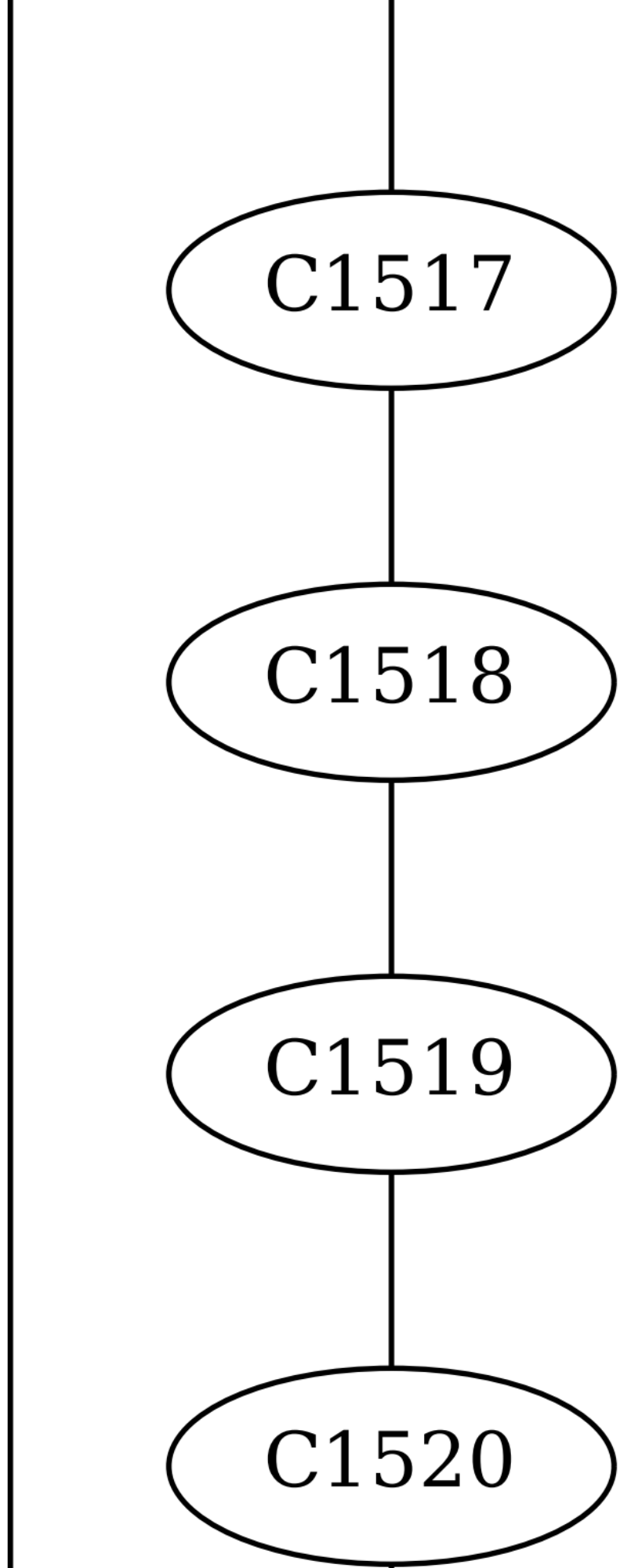
C1517
C1518
C1519
C1520

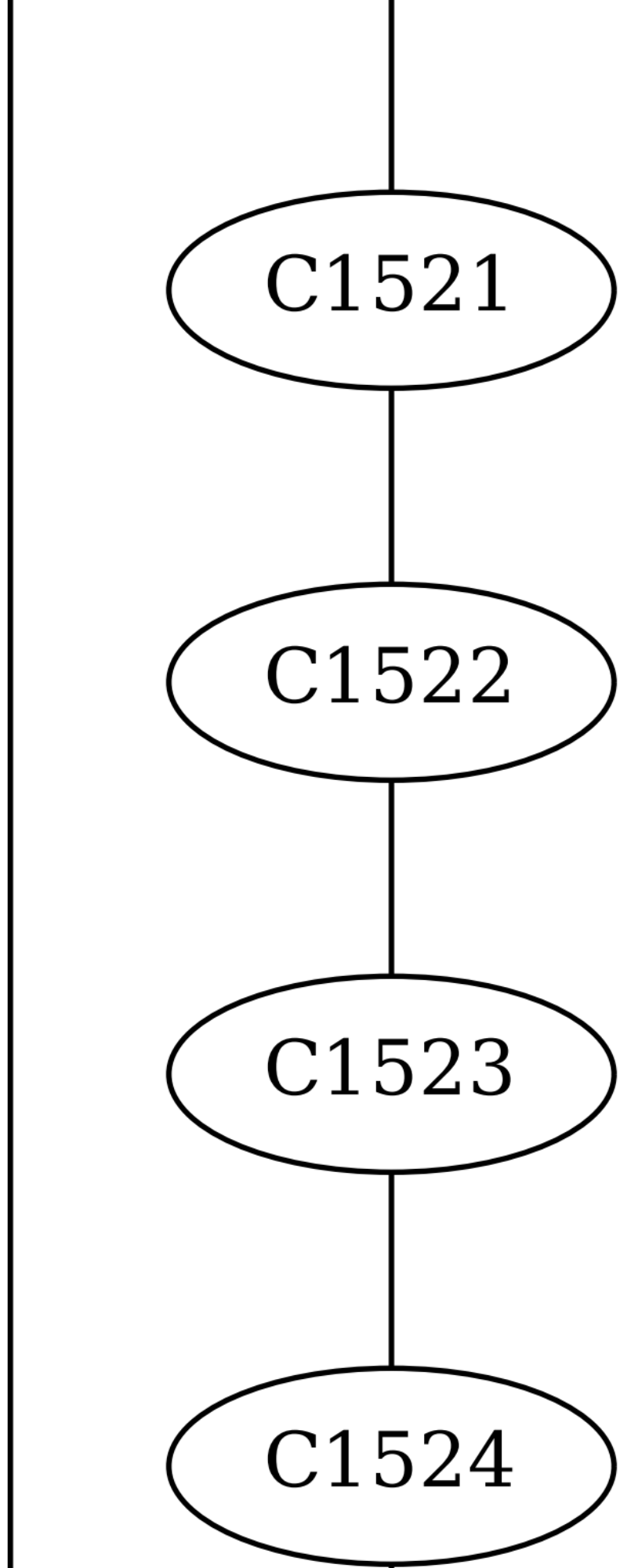
C1521
C1522
C1523
C1524

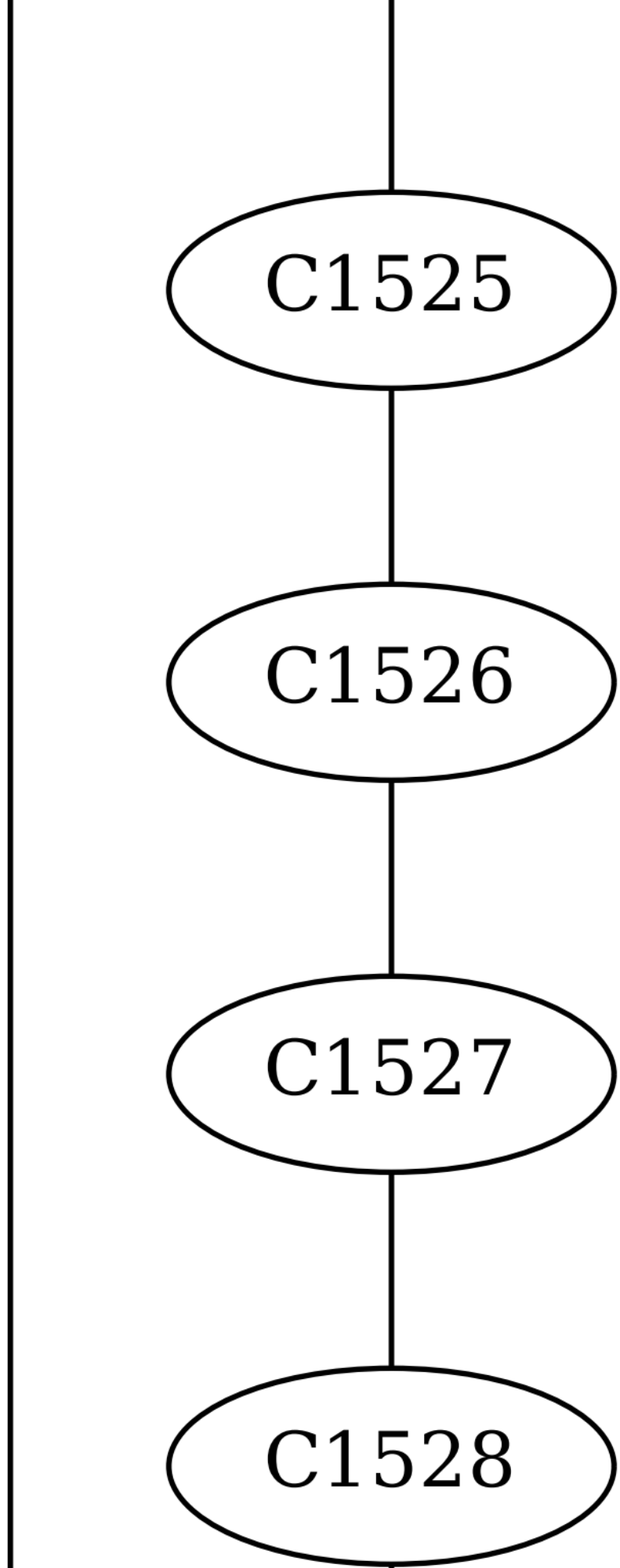
C1525
C1526
C1527
C1528

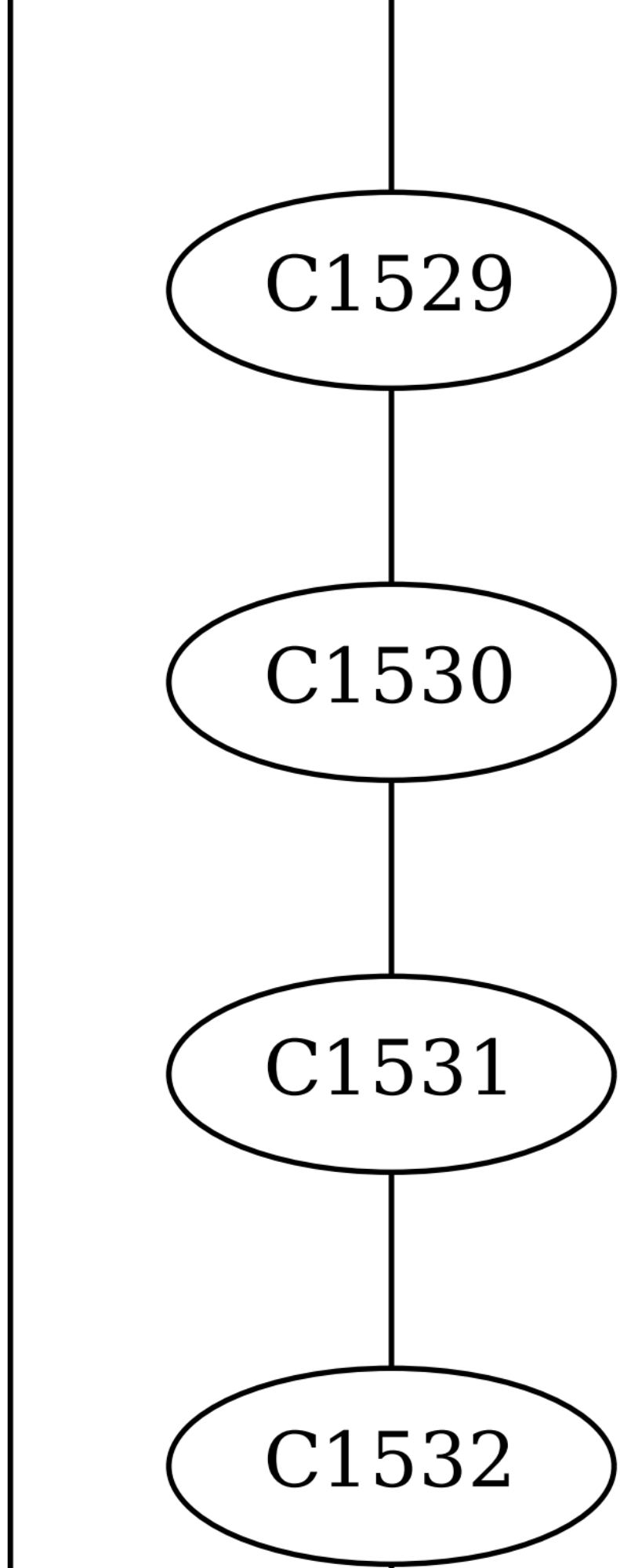
C1529
C1530
C1531
C1532

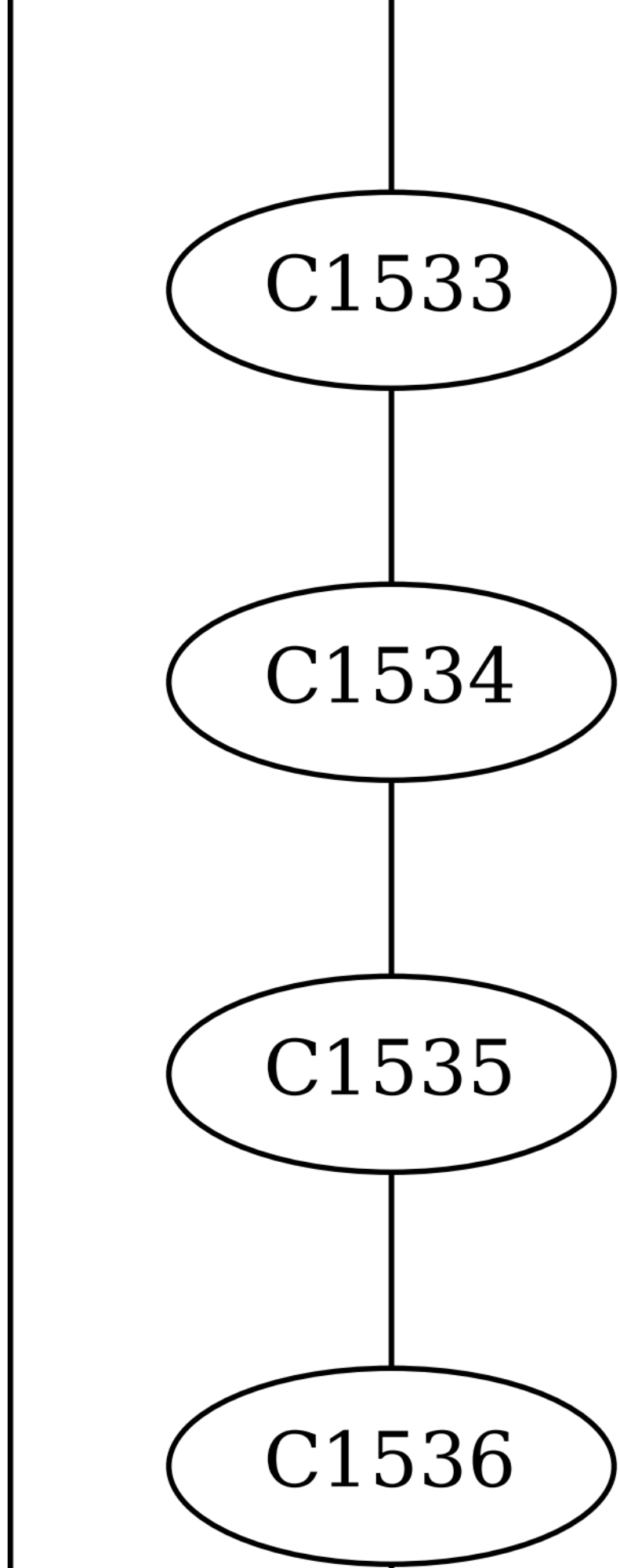
C1533
C1534
C1535
C1536

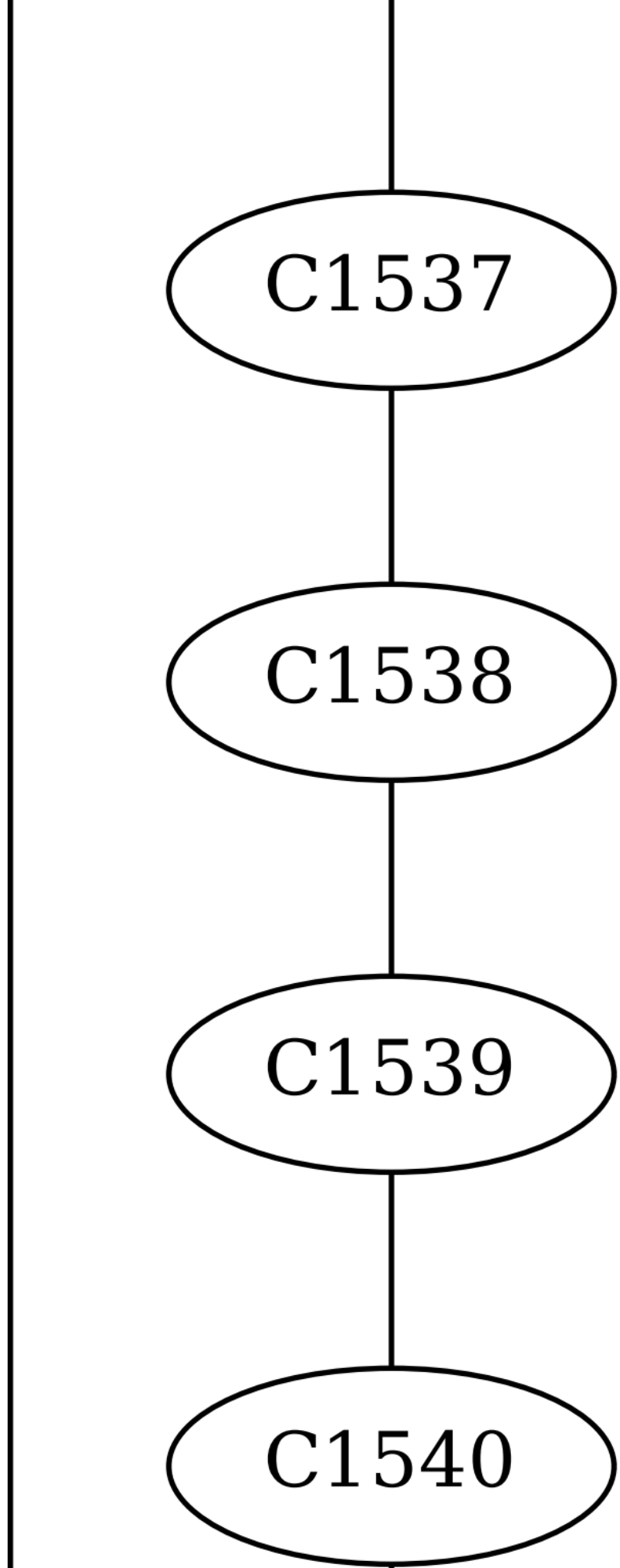
C1537
C1538
C1539
C1540

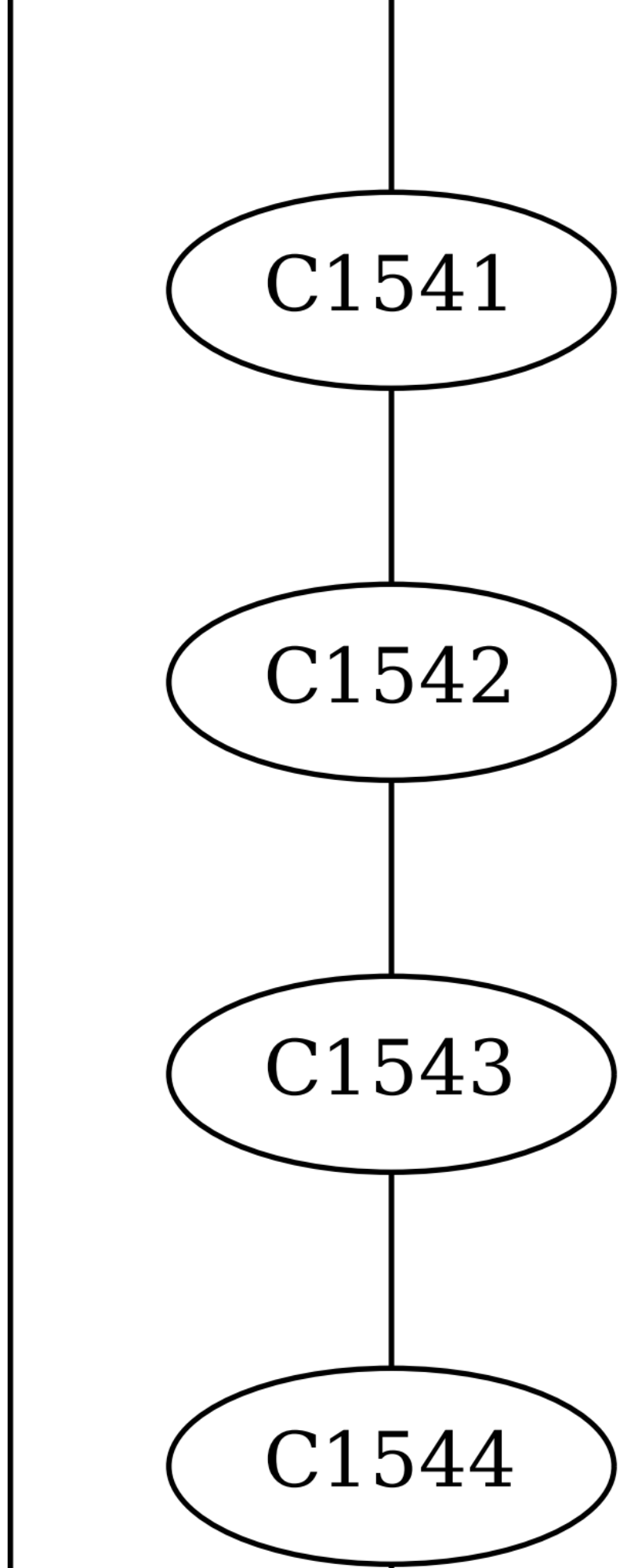
C1541
C1542
C1543
C1544

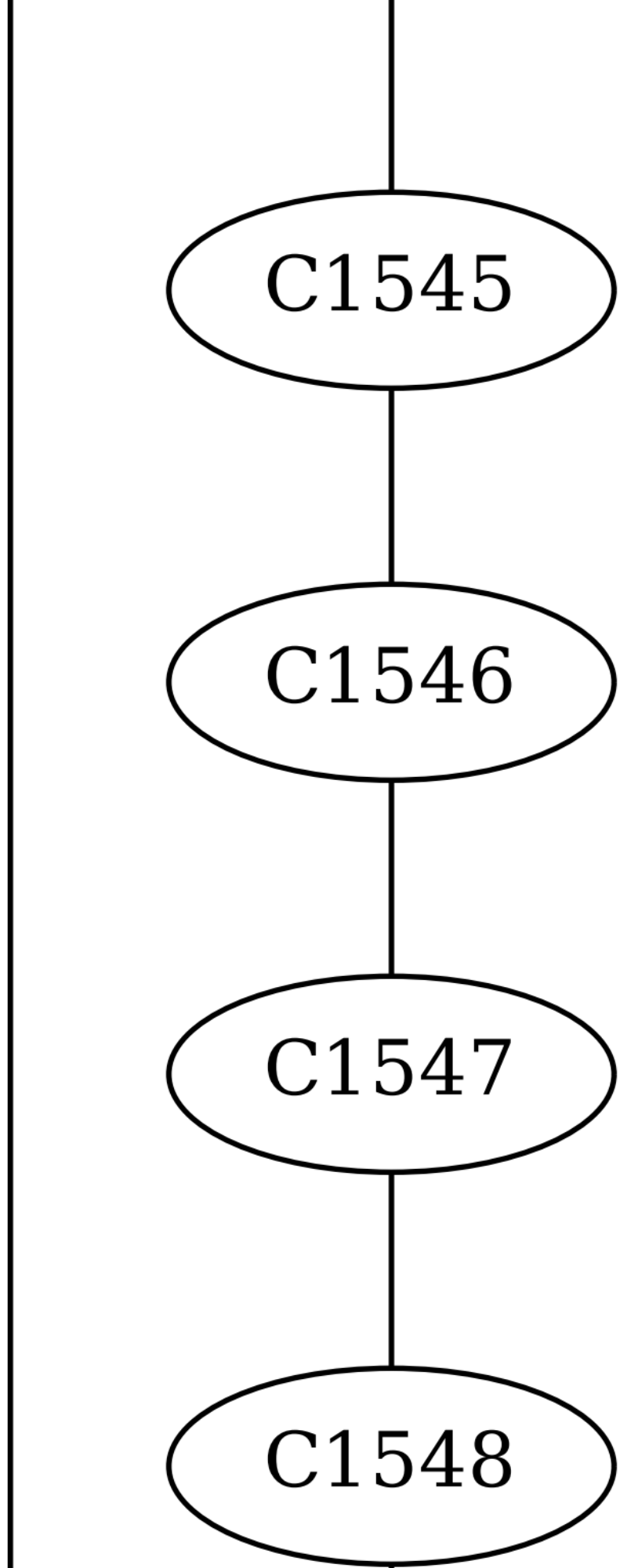
C1545
C1546
C1547
C1548

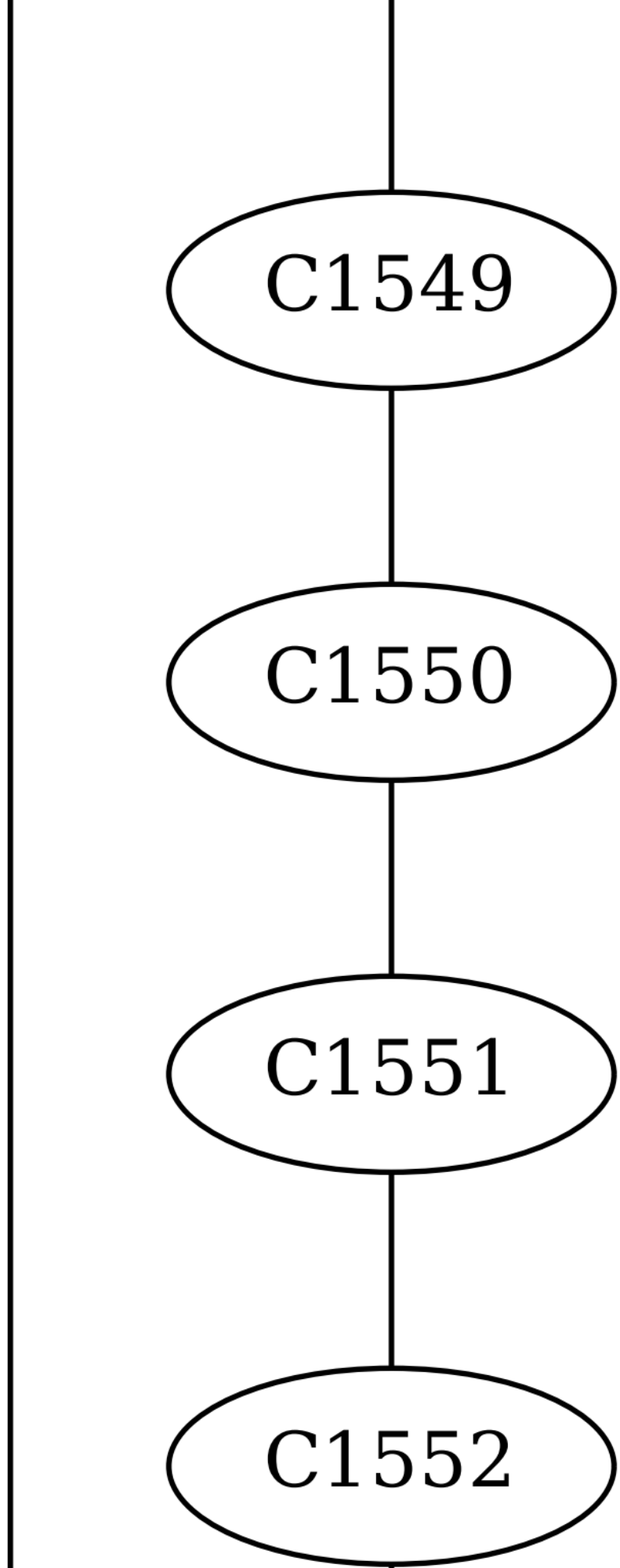
C1549
C1550
C1551
C1552

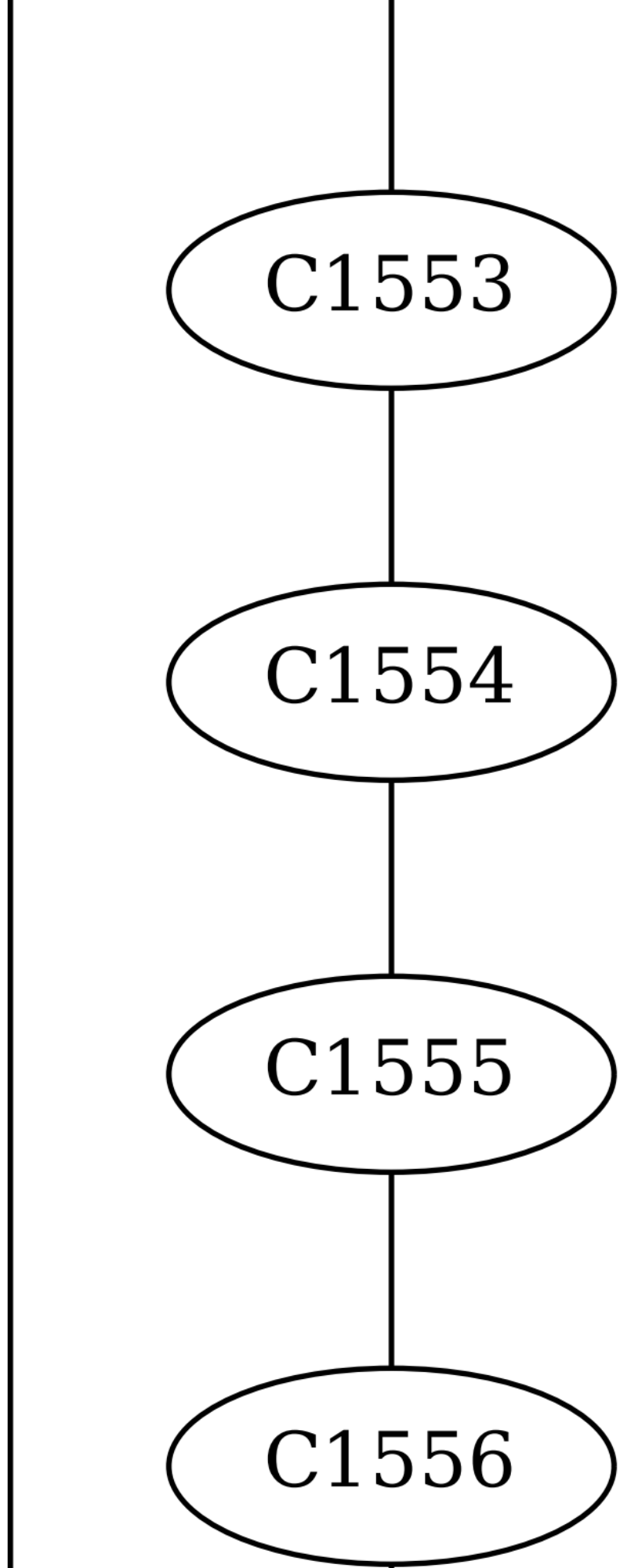
C1553
C1554
C1555
C1556

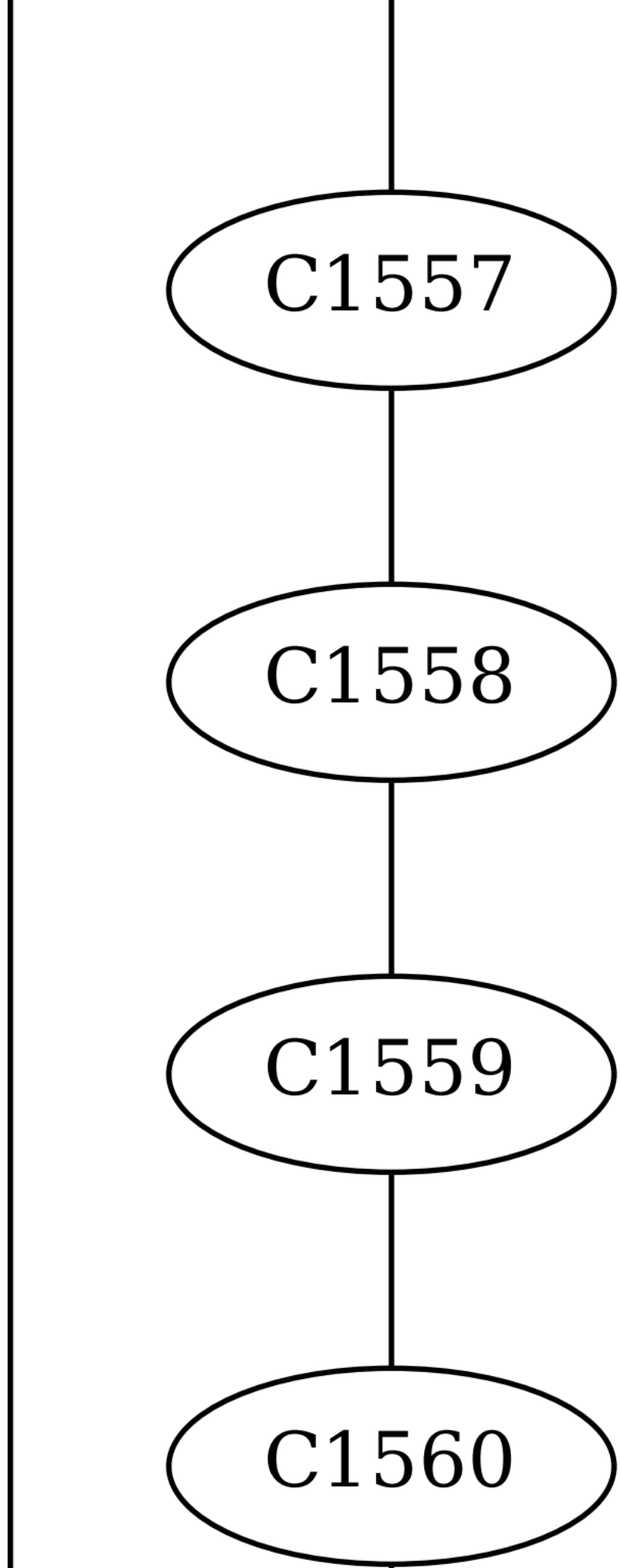
C1557
C1558
C1559
C1560

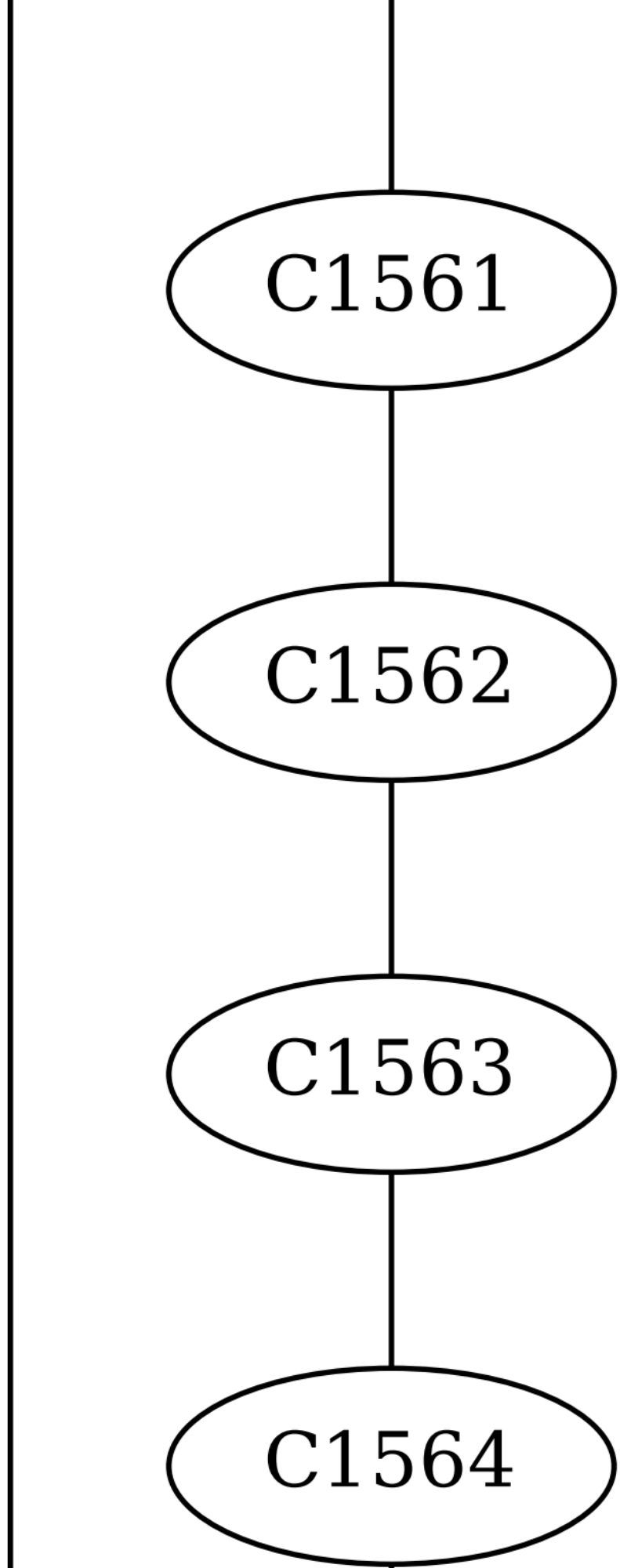
C1561
C1562
C1563
C1564

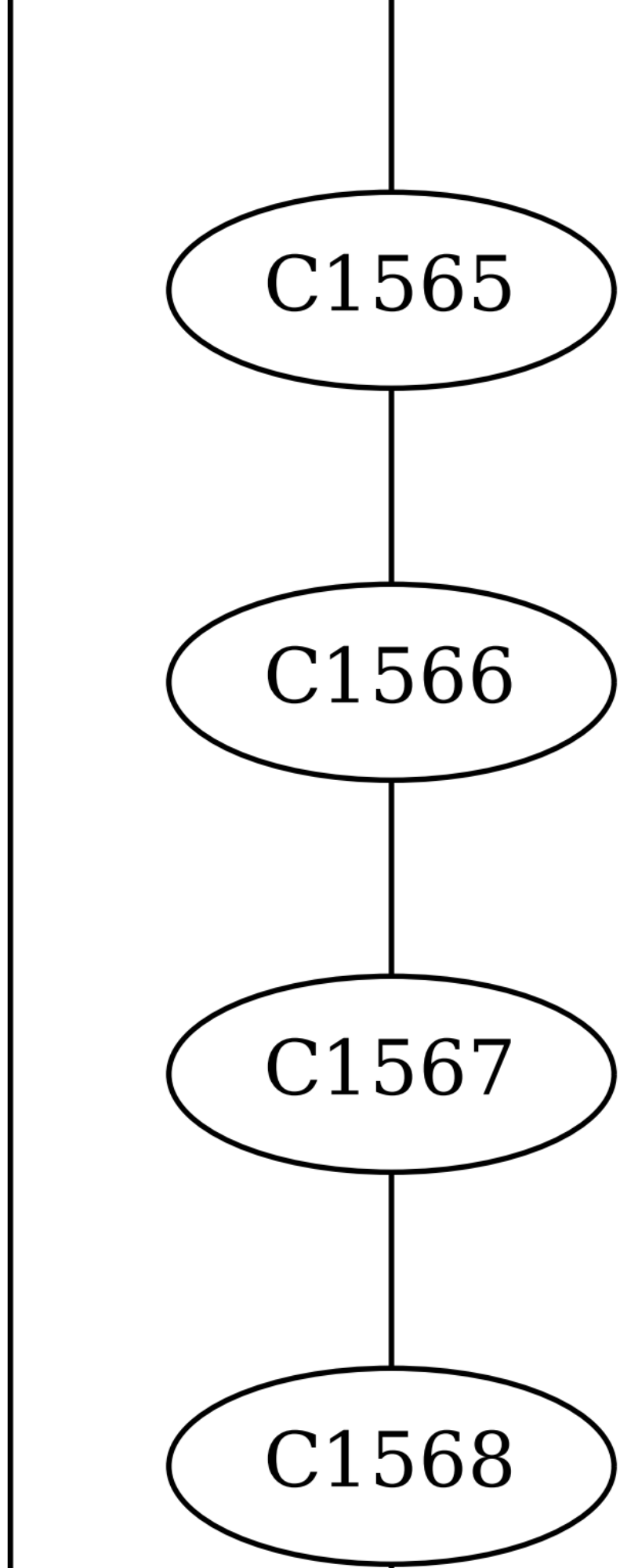
C1565
C1566
C1567
C1568

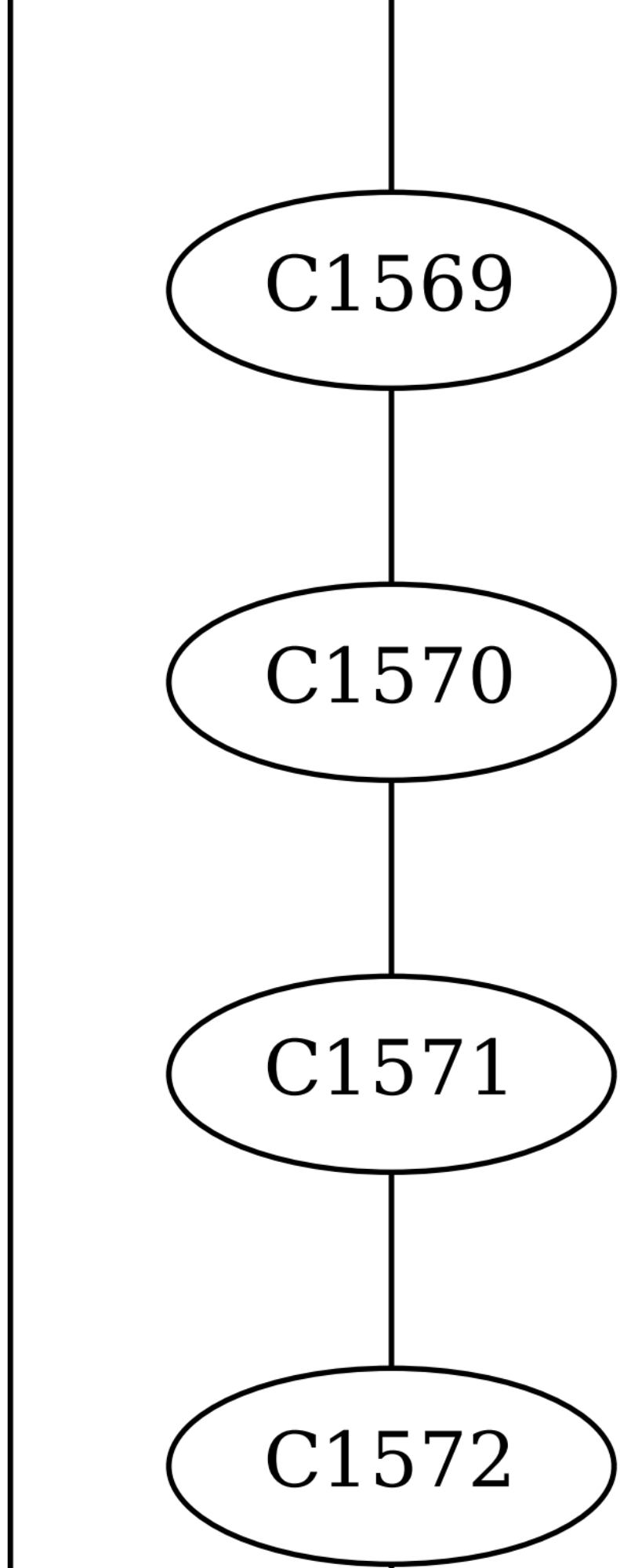
C1569
C1570
C1571
C1572

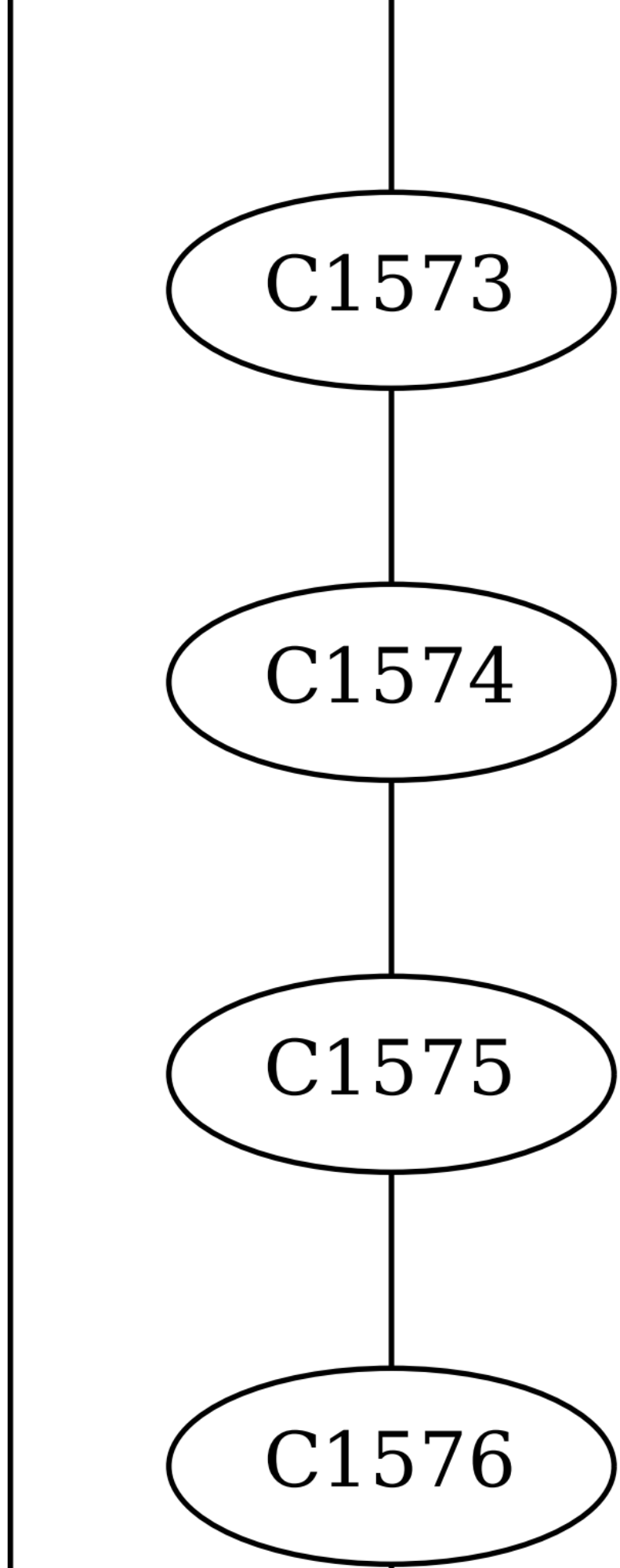
C1573
C1574
C1575
C1576

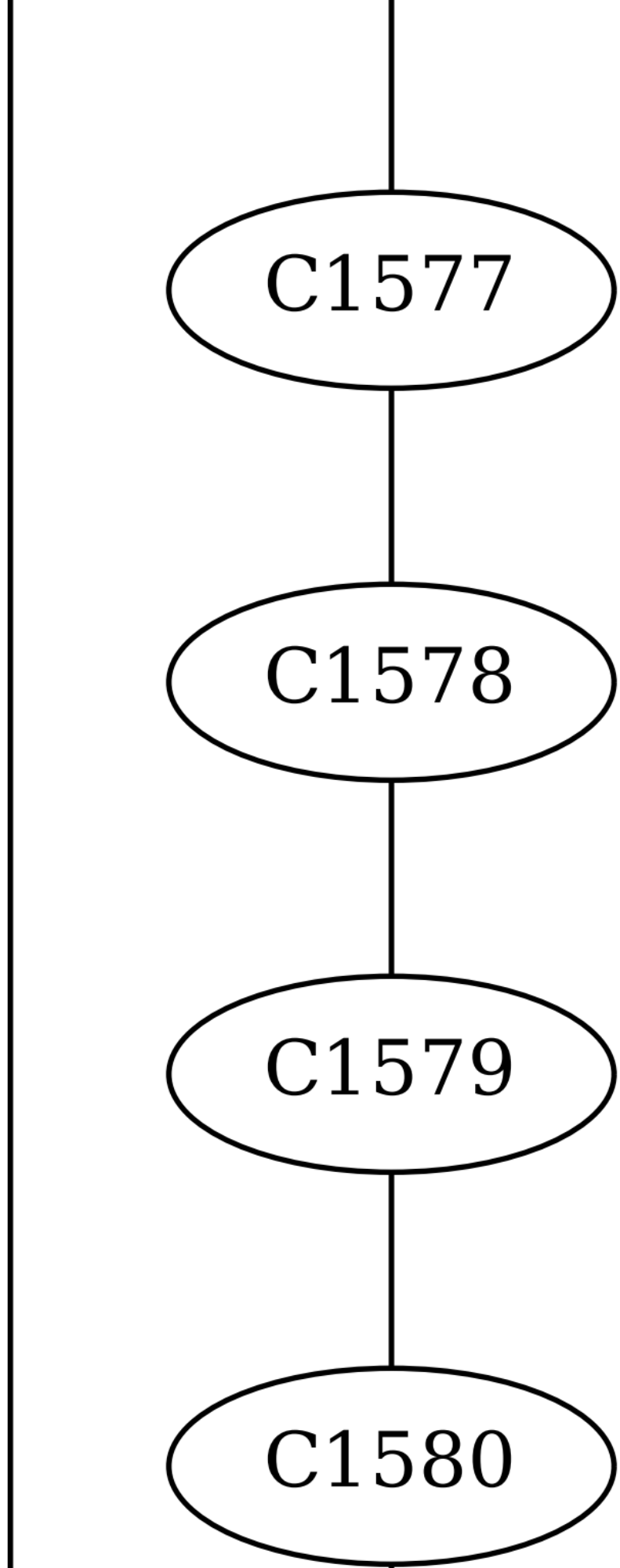
C1577
C1578
C1579
C1580

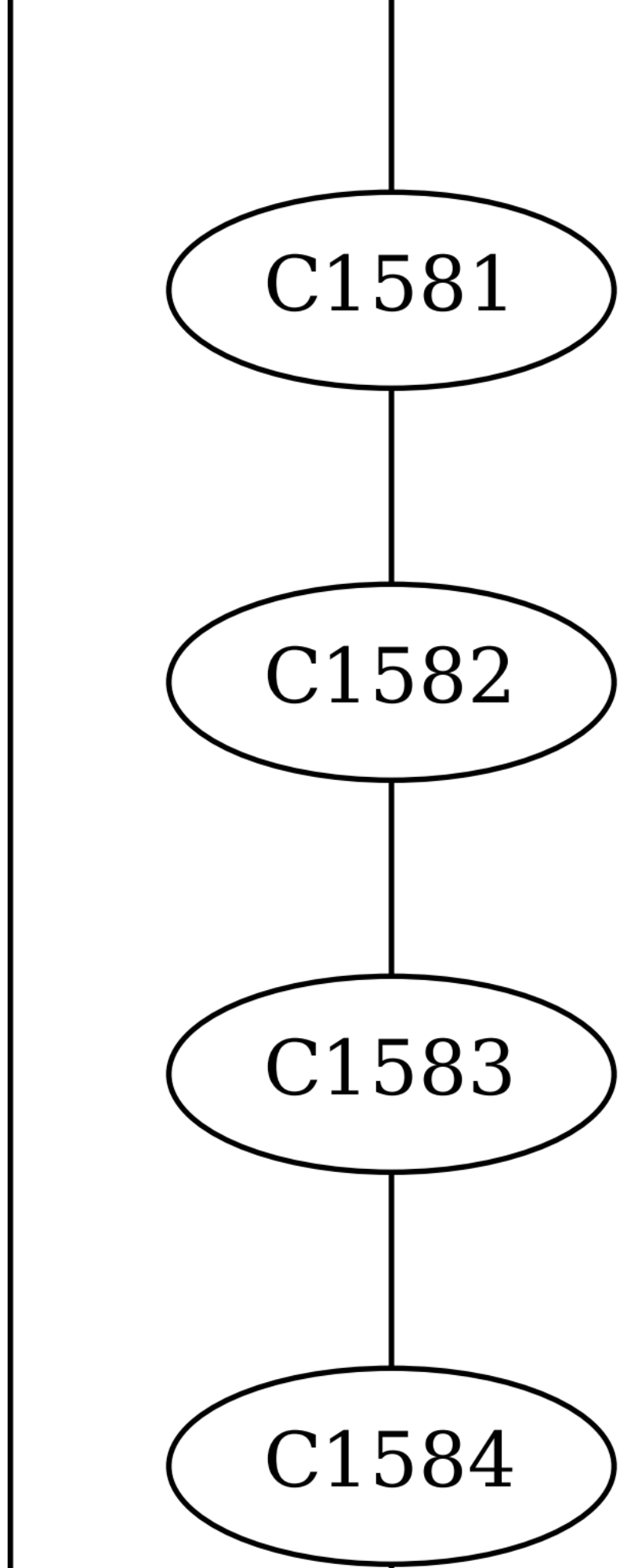
C1581
C1582
C1583
C1584

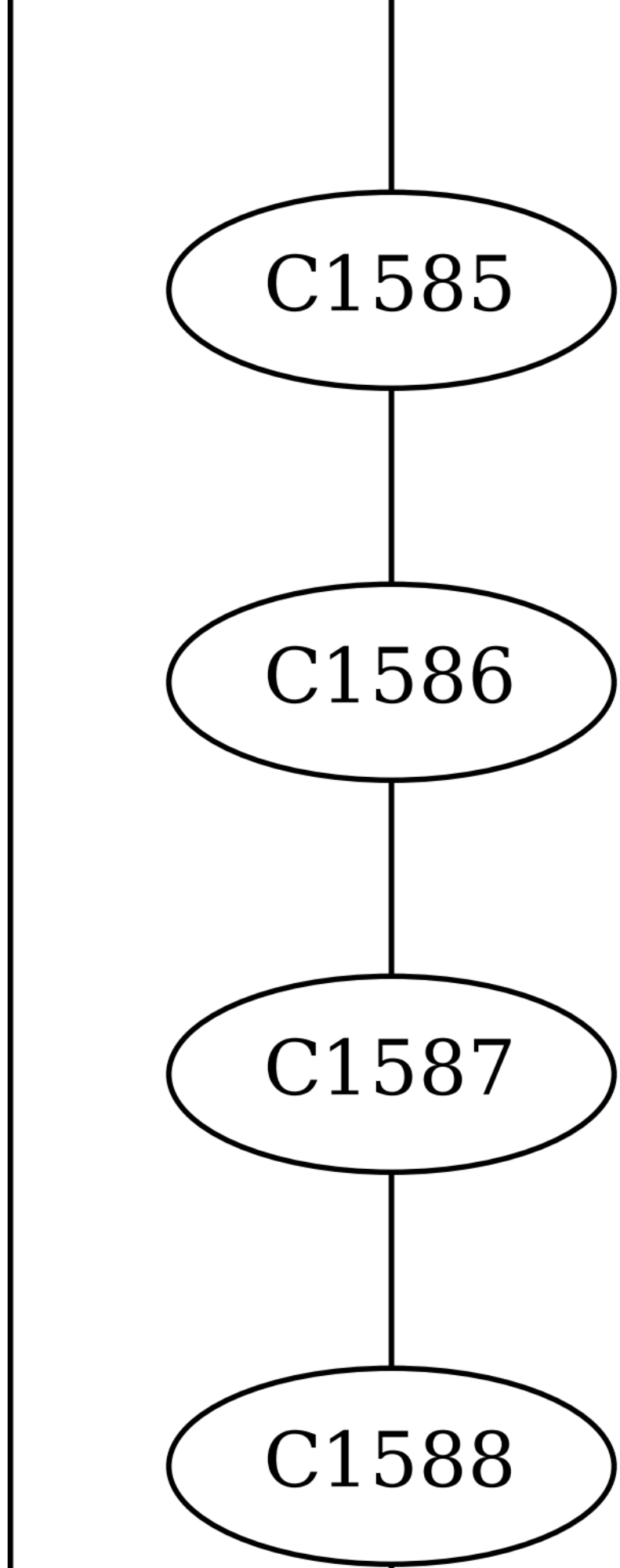
C1585
C1586
C1587
C1588

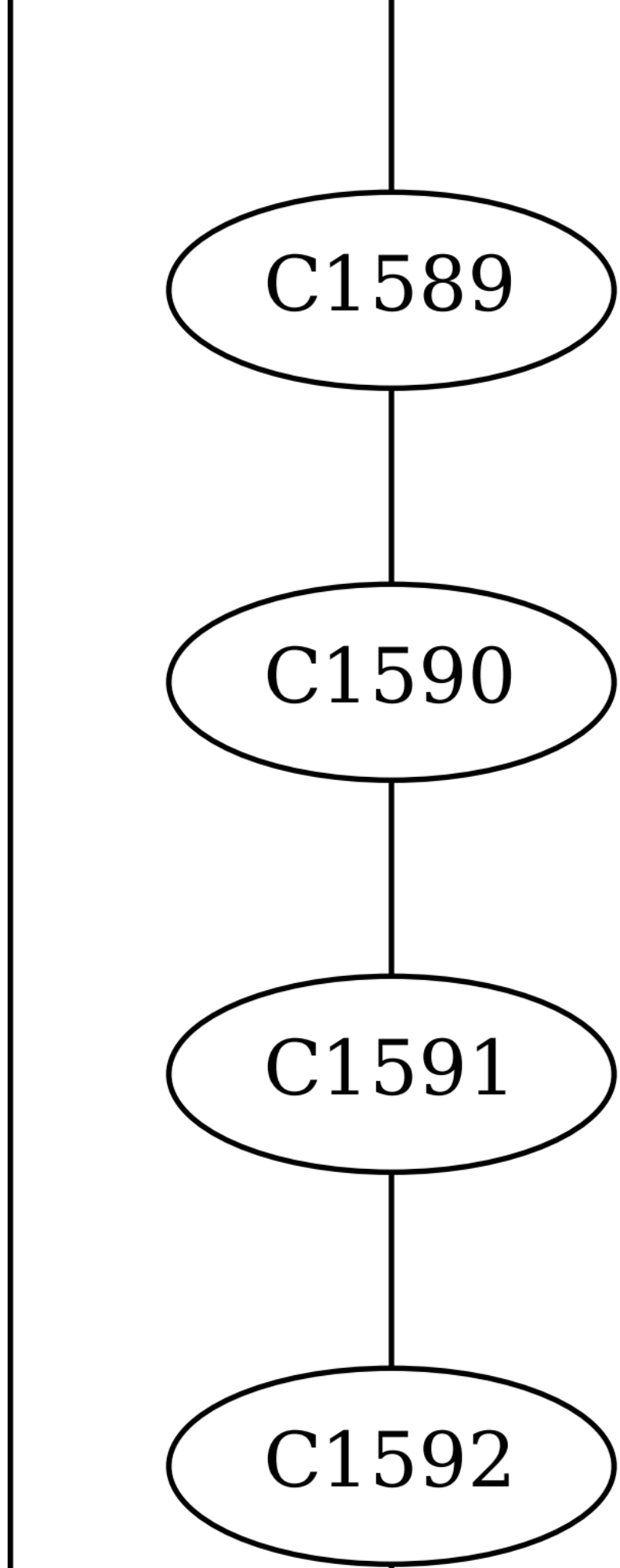
C1589
C1590
C1591
C1592

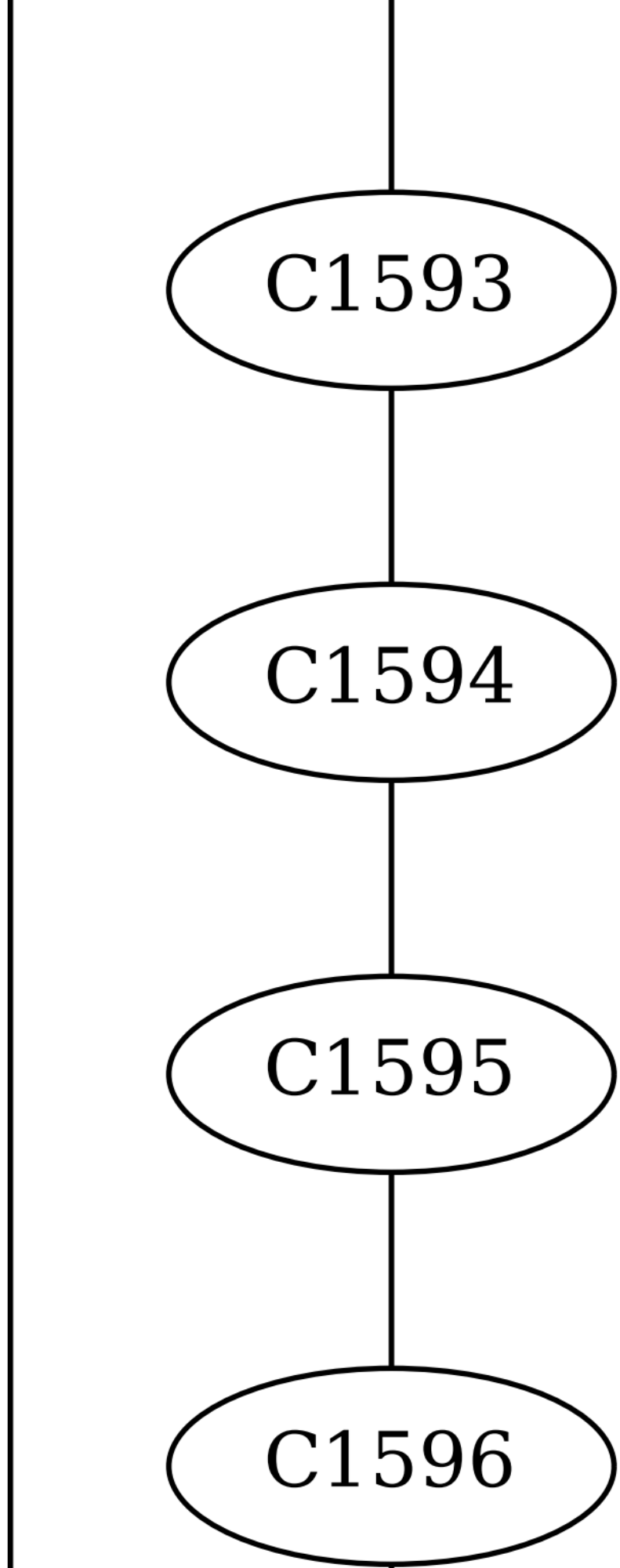
C1593
C1594
C1595
C1596

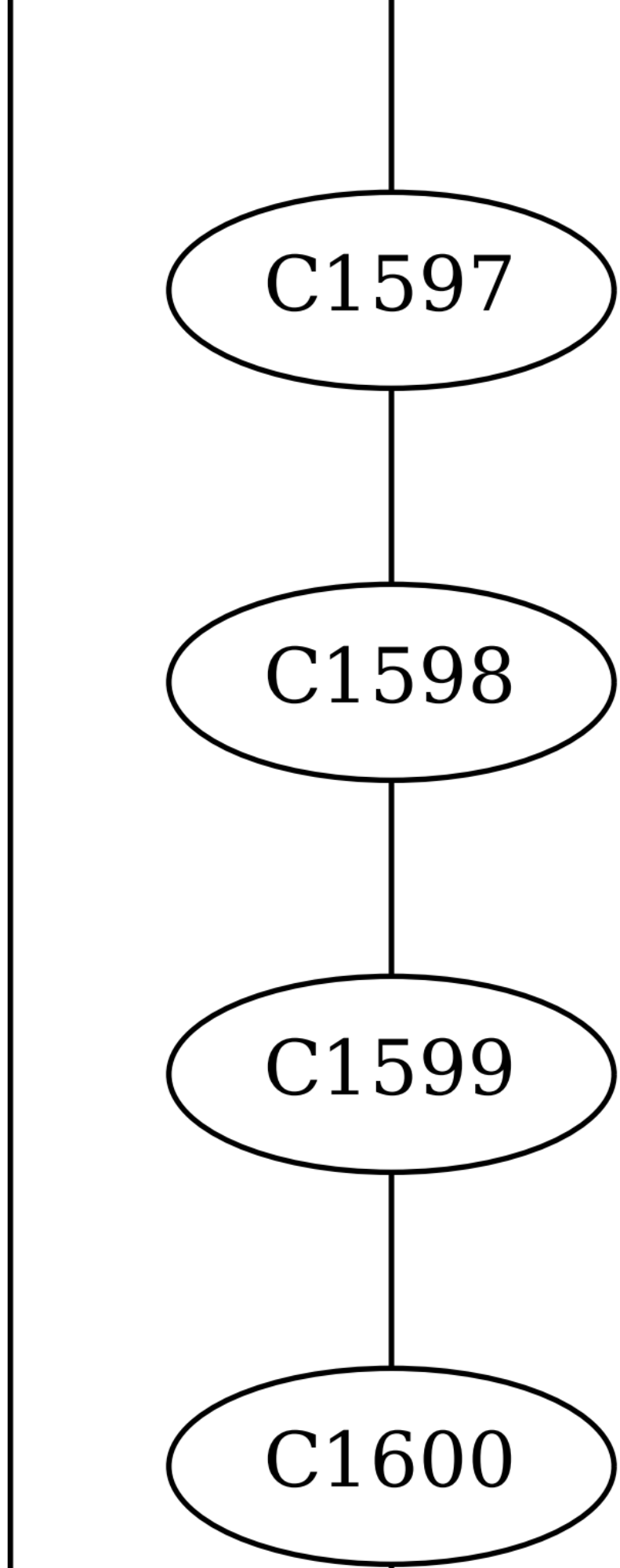
C1597
C1598
C1599
C1600

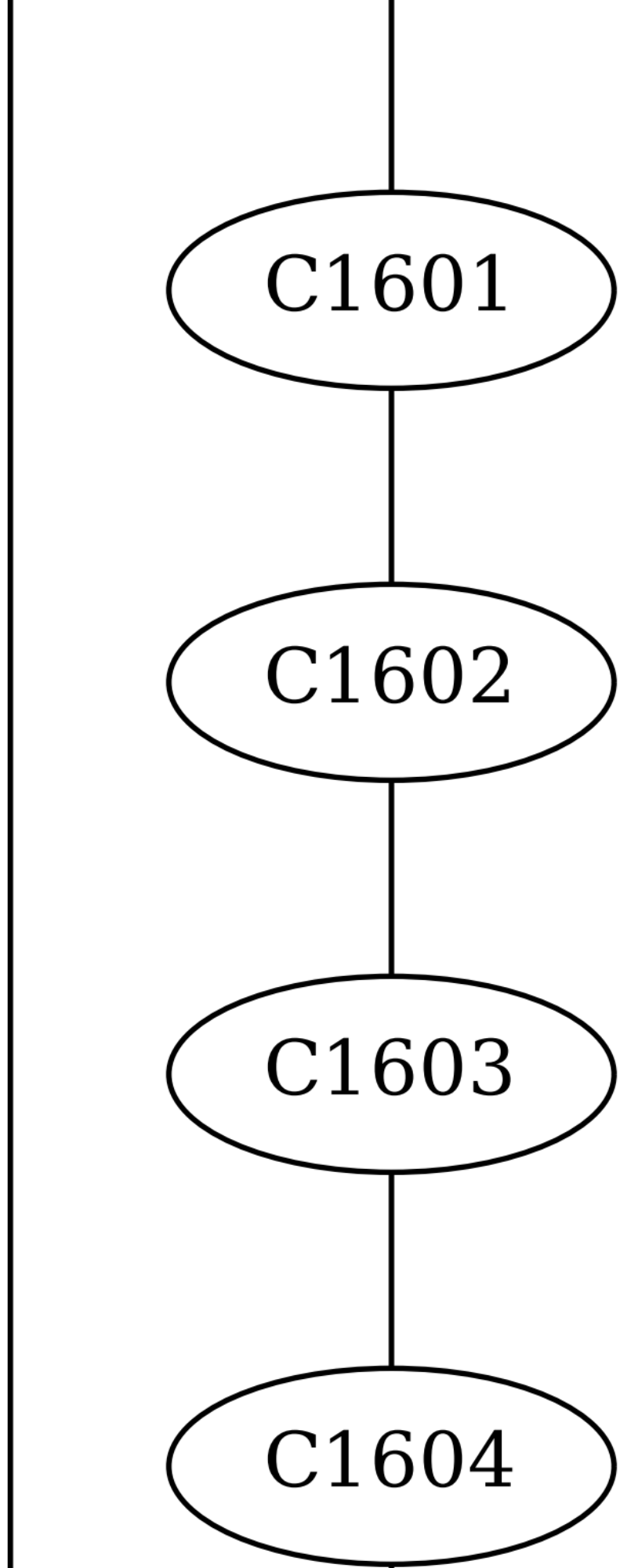
C1601
C1602
C1603
C1604

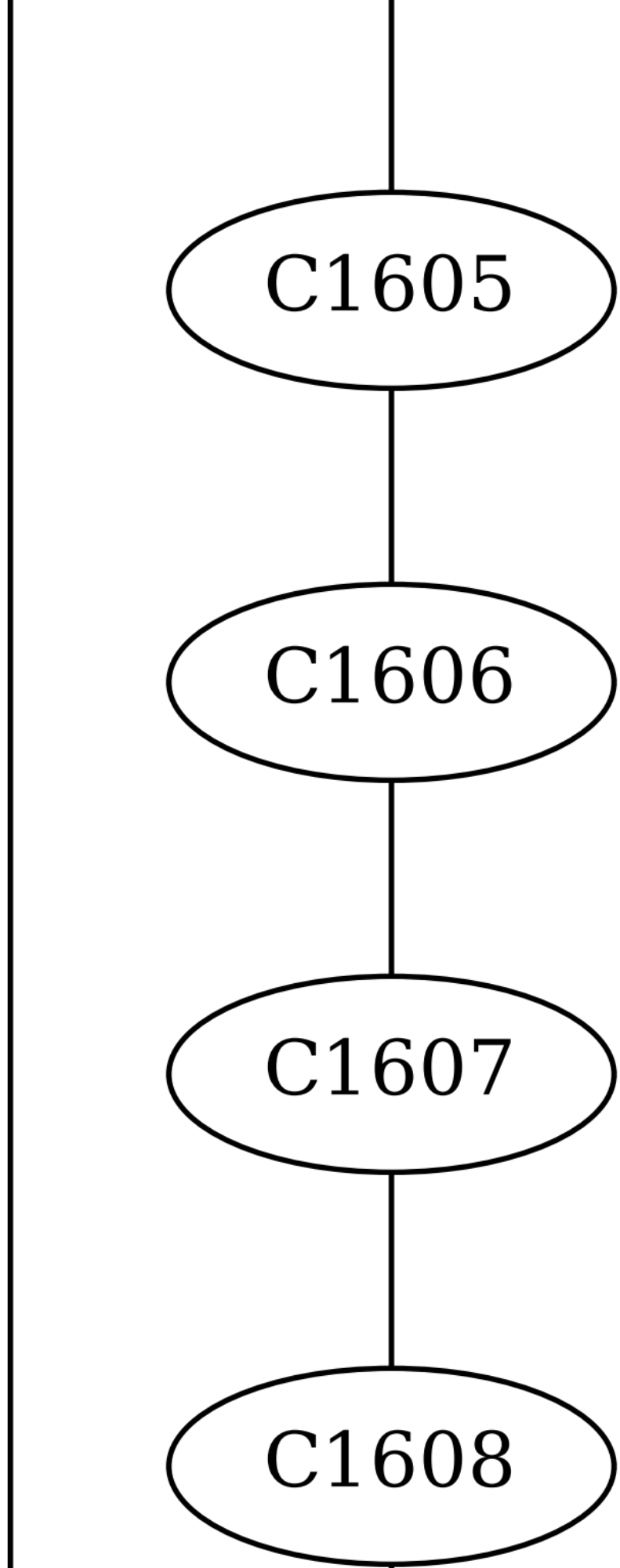
C1605
C1606
C1607
C1608

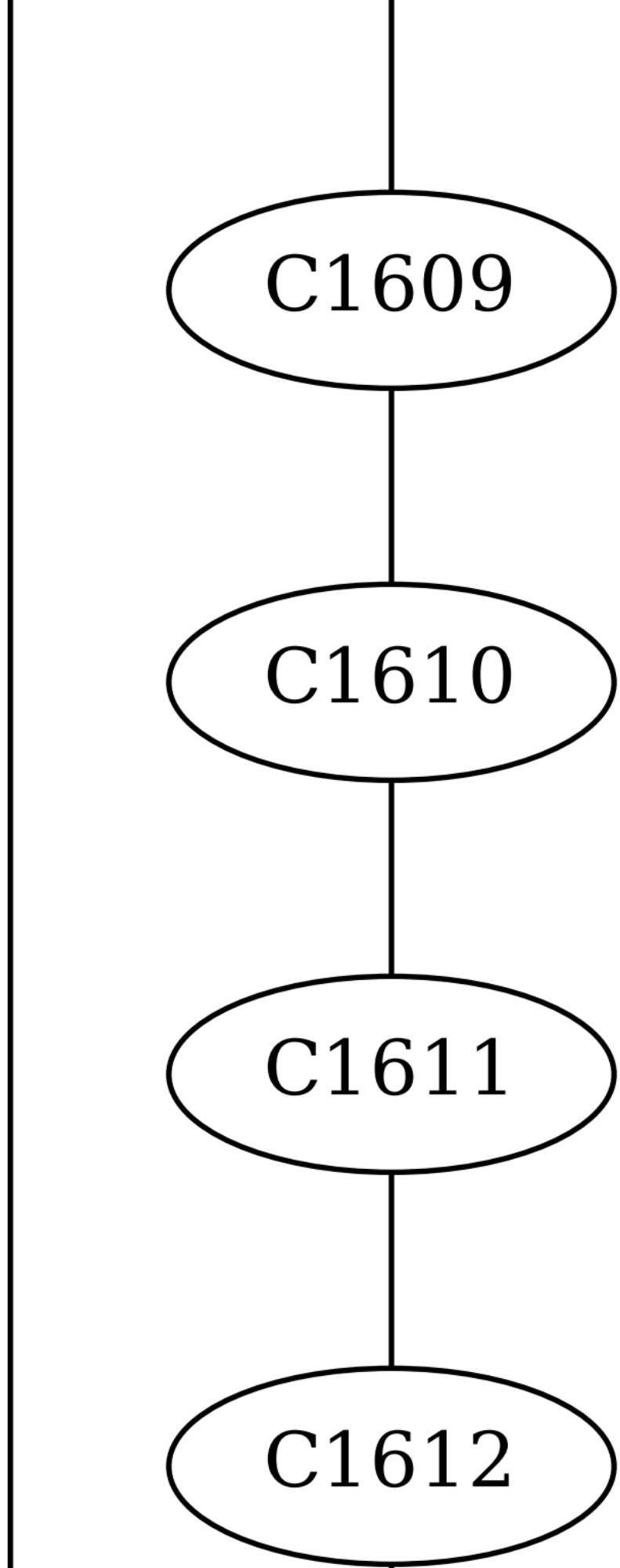
C1609
C1610
C1611
C1612

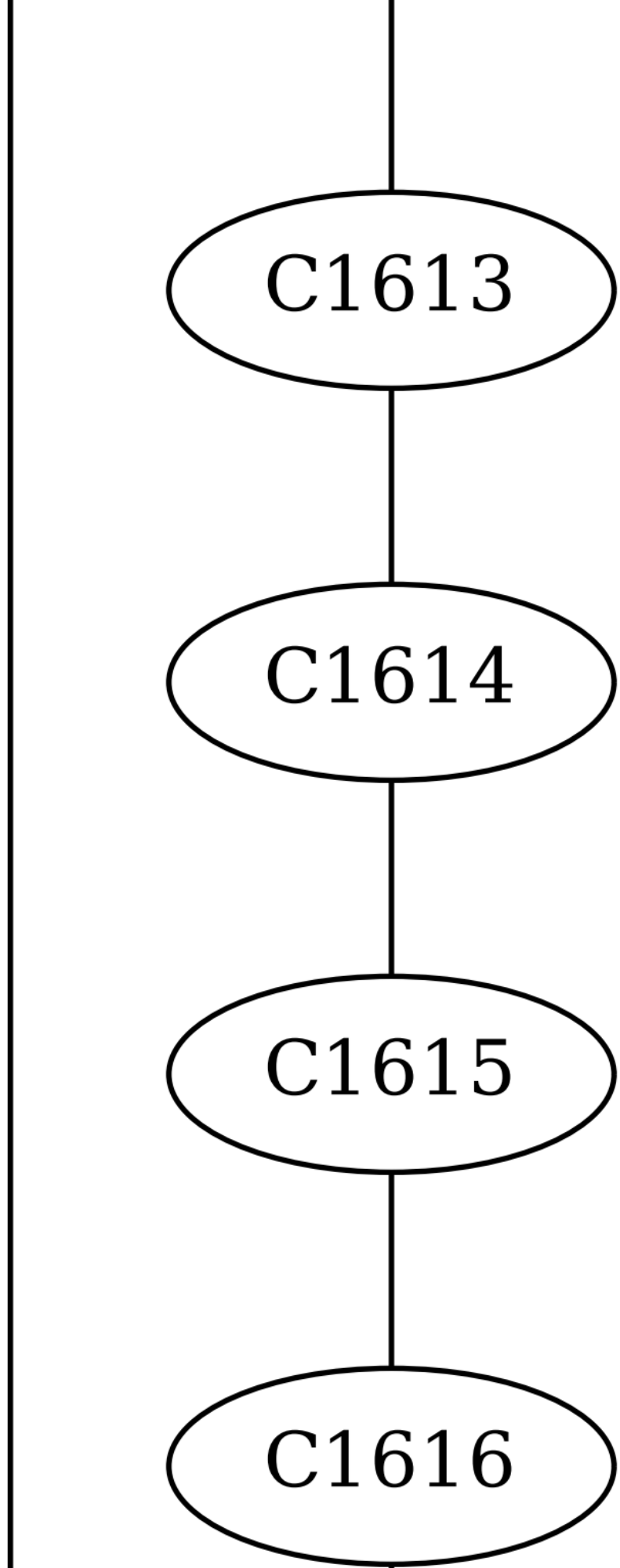
C1613
C1614
C1615
C1616

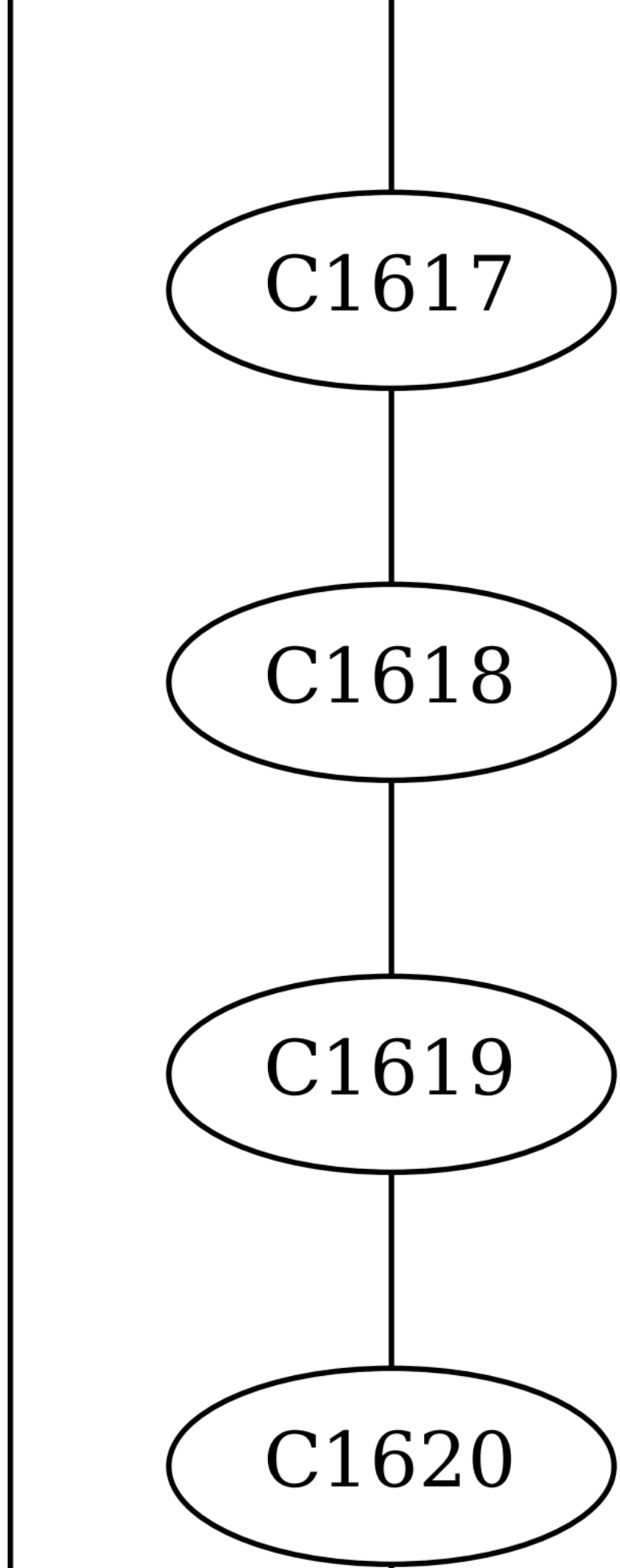
C1617
C1618
C1619
C1620

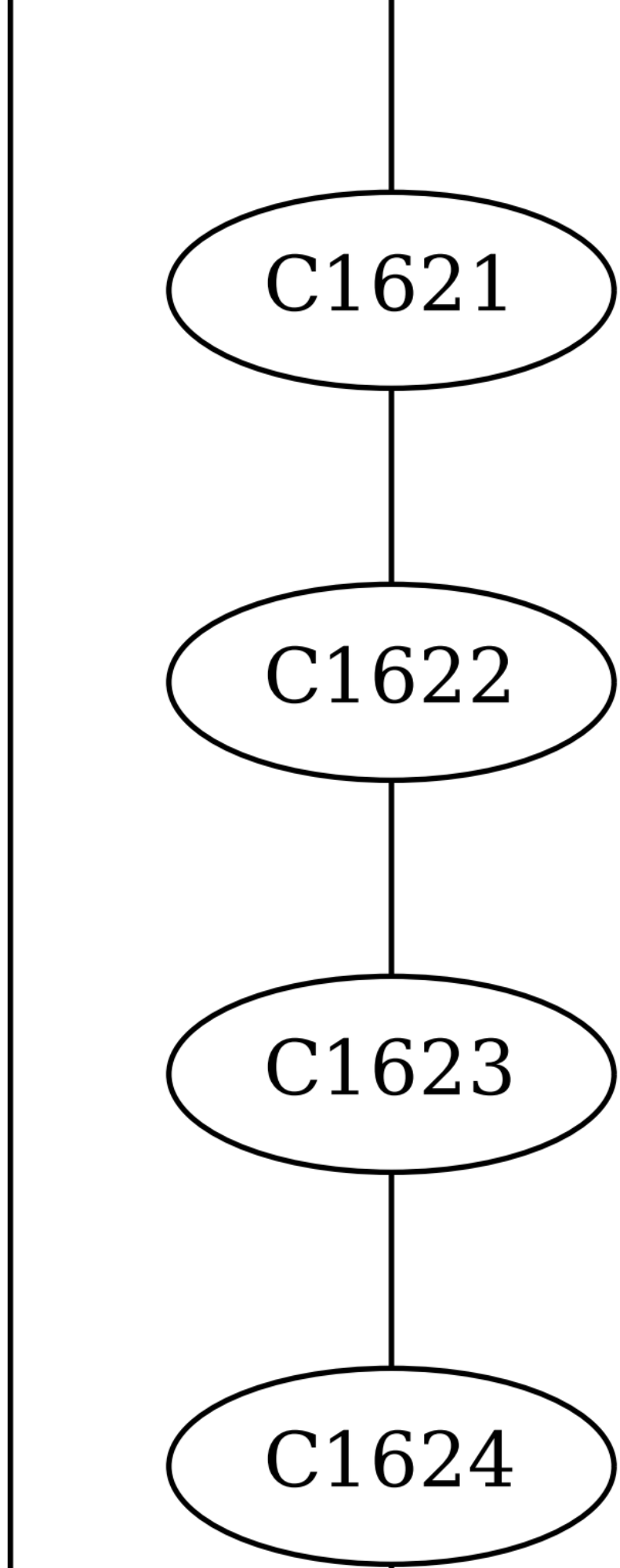
C1621
C1622
C1623
C1624

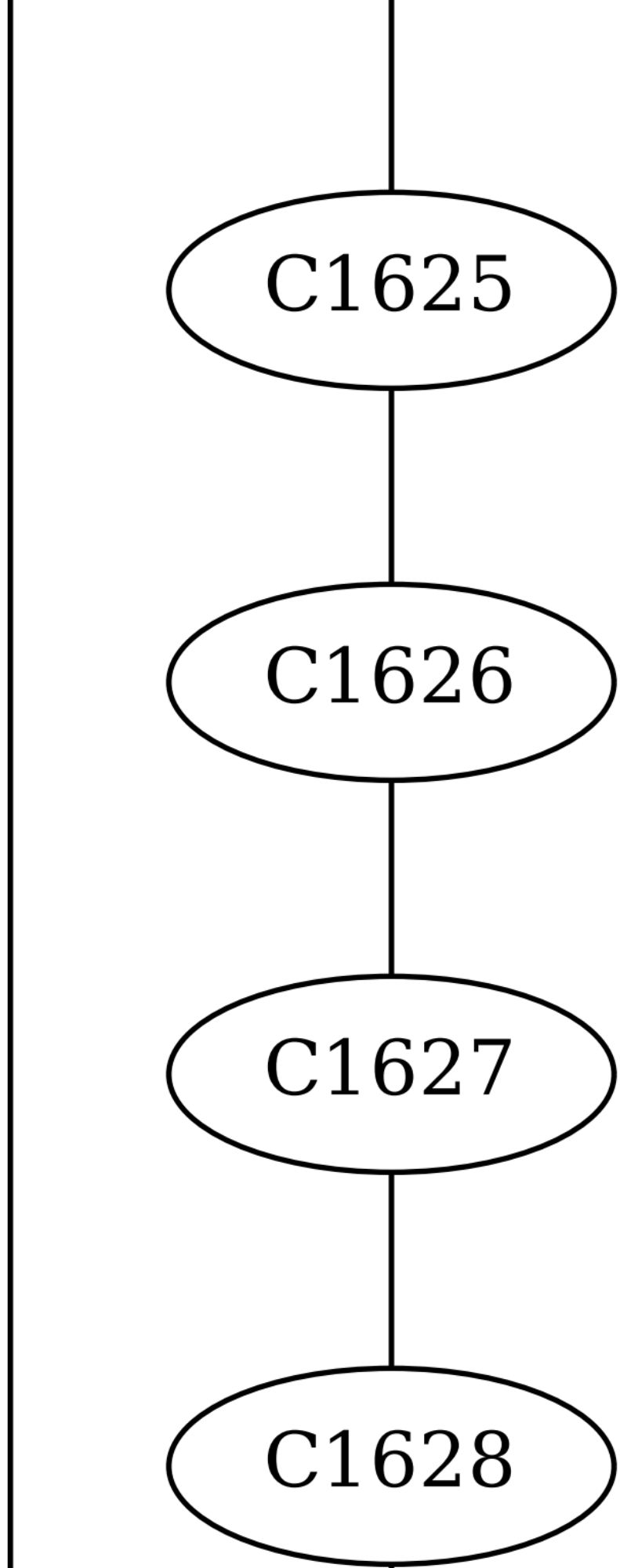
C1625
C1626
C1627
C1628

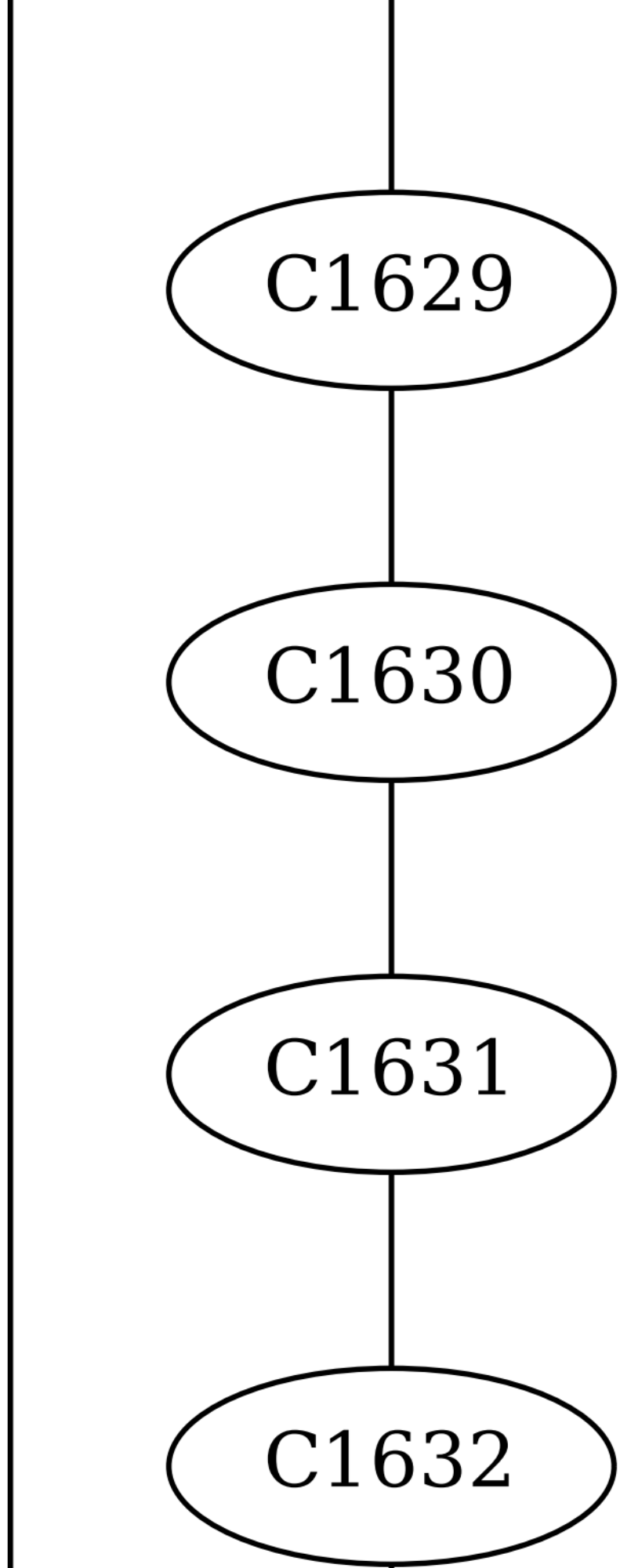
C1629
C1630
C1631
C1632

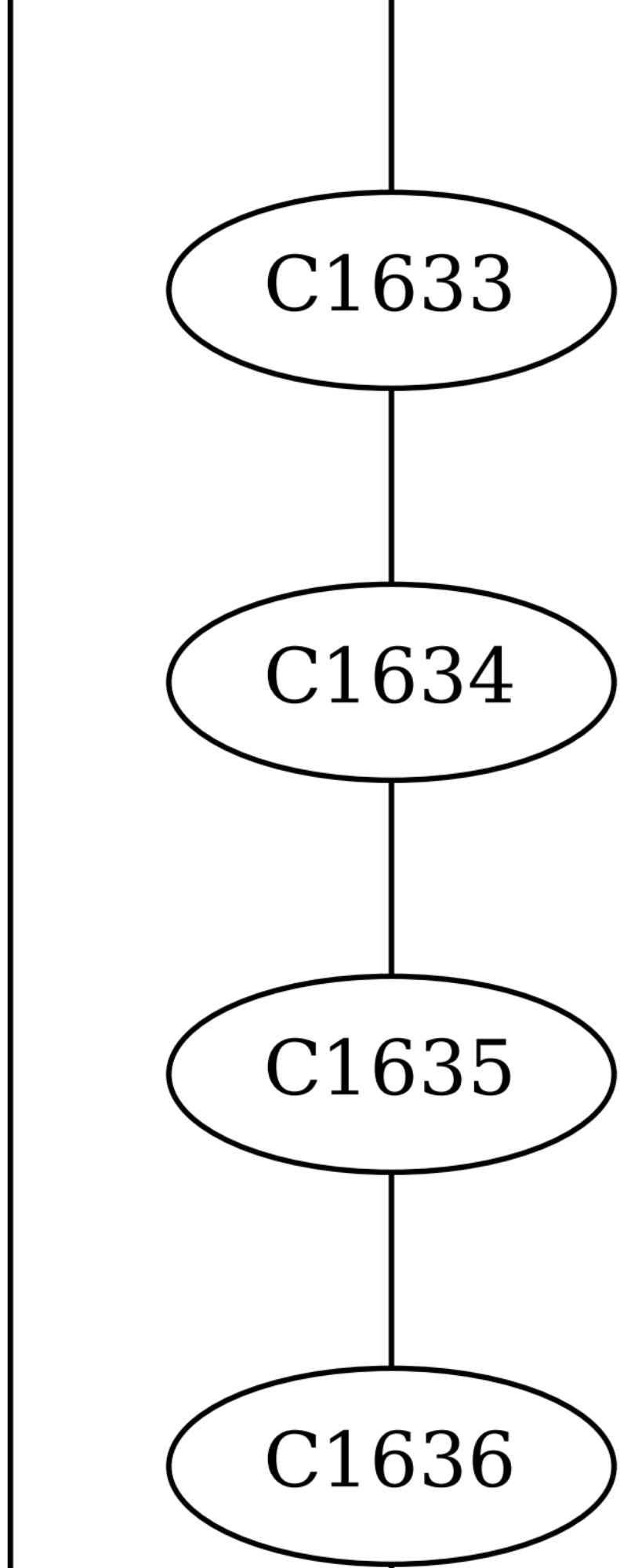
C1633
C1634
C1635
C1636

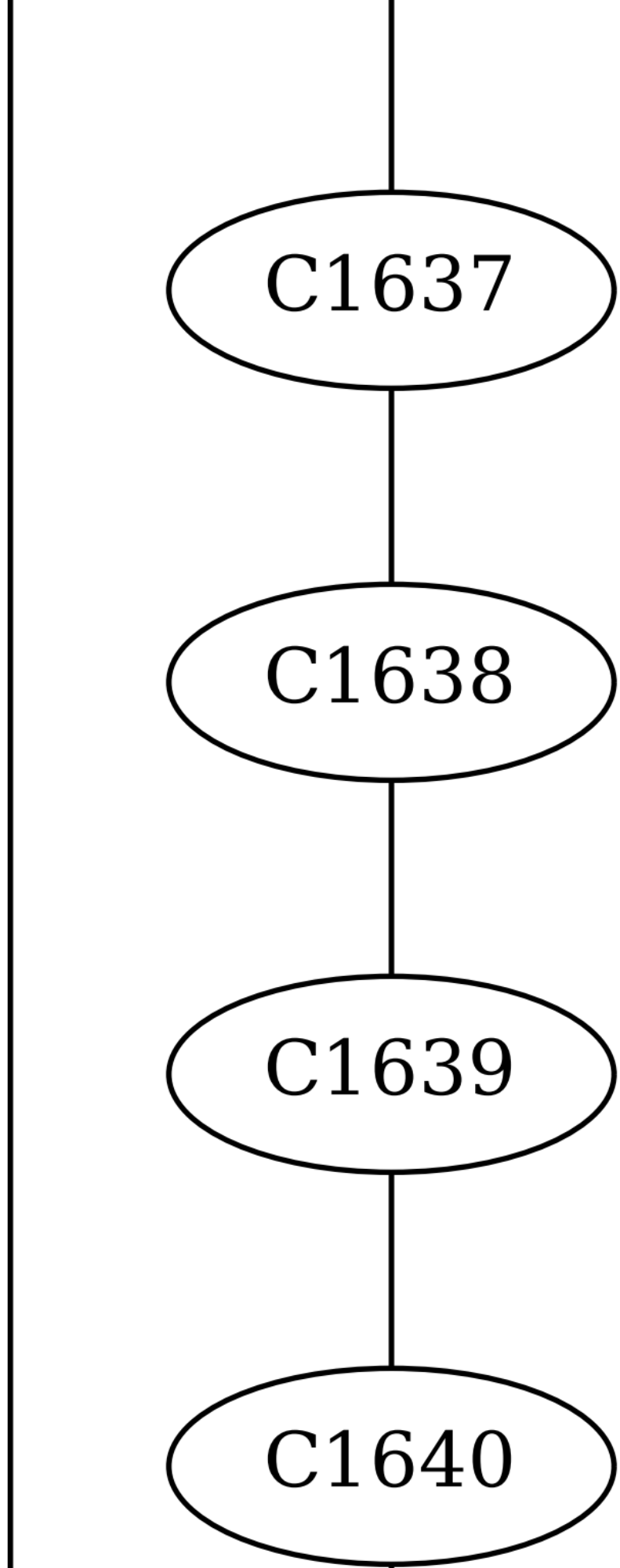
C1637
C1638
C1639
C1640

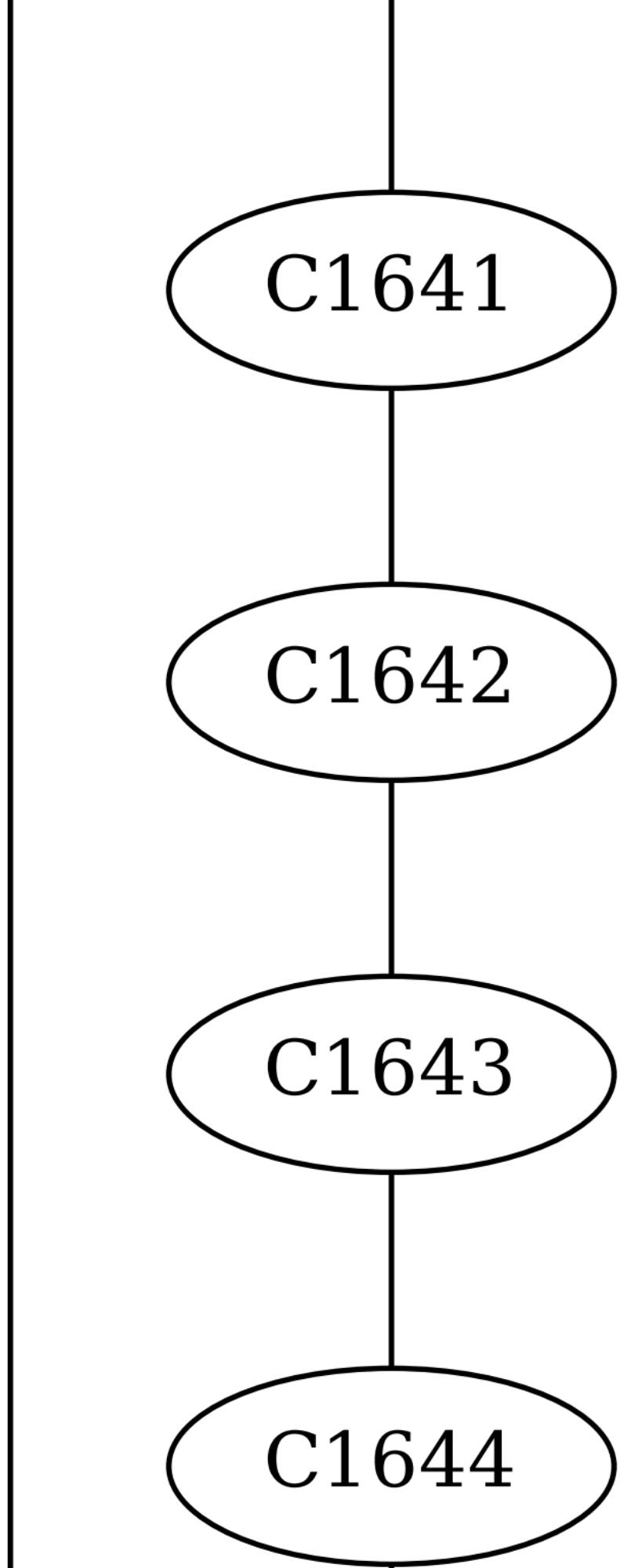
C1641
C1642
C1643
C1644

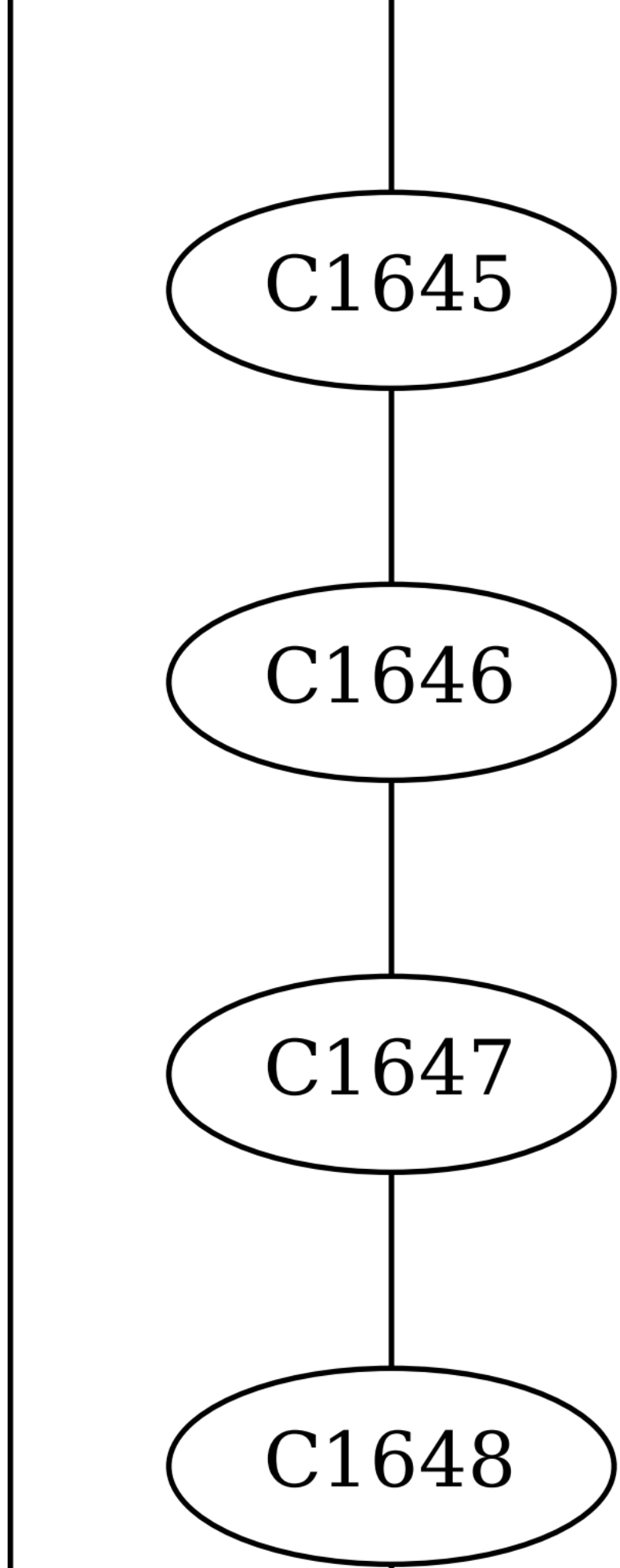
C1645
C1646
C1647
C1648

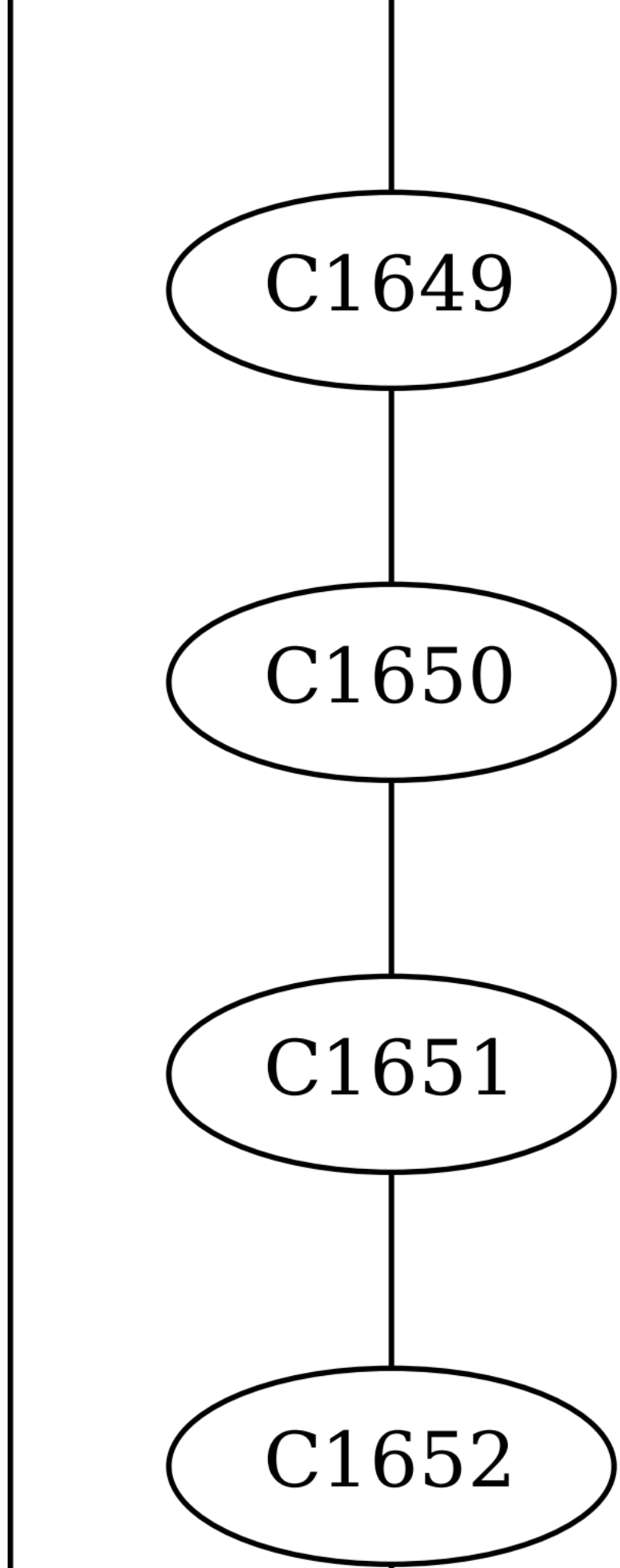
C1649
C1650
C1651
C1652

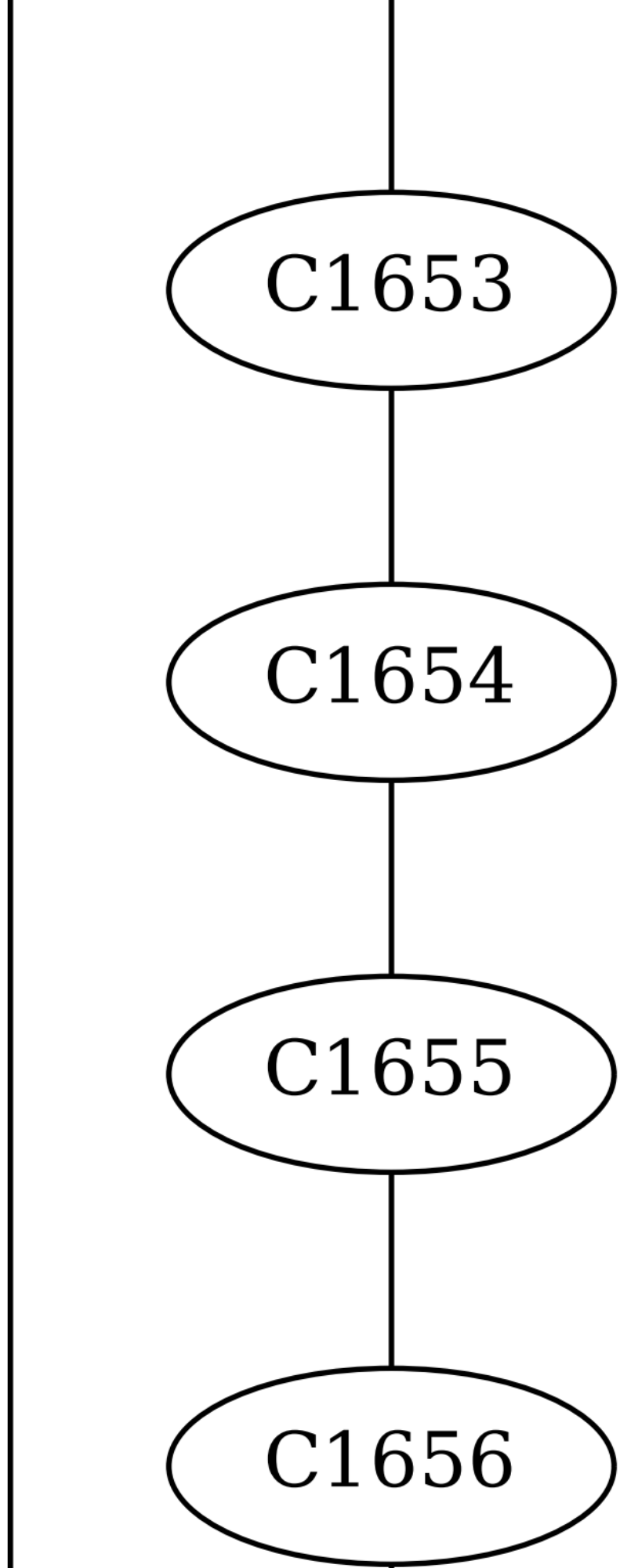
C1653
C1654
C1655
C1656

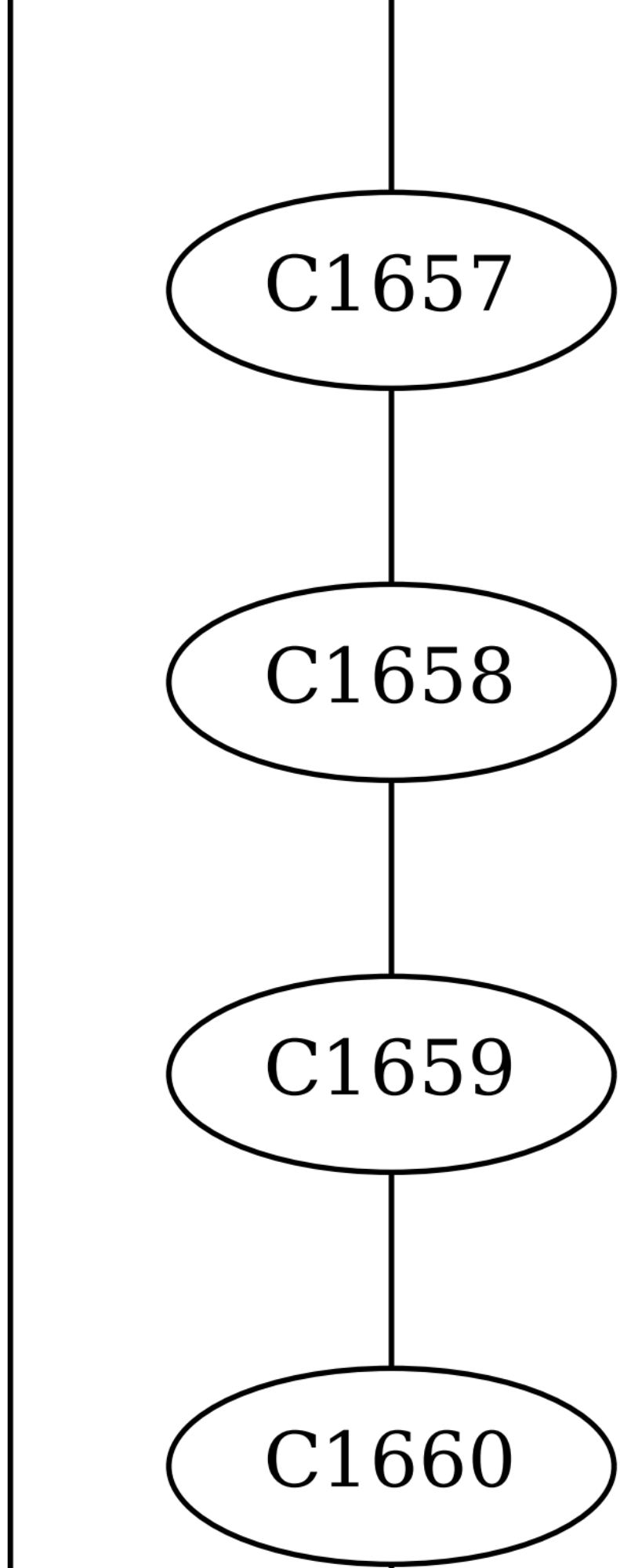
C1657
C1658
C1659
C1660

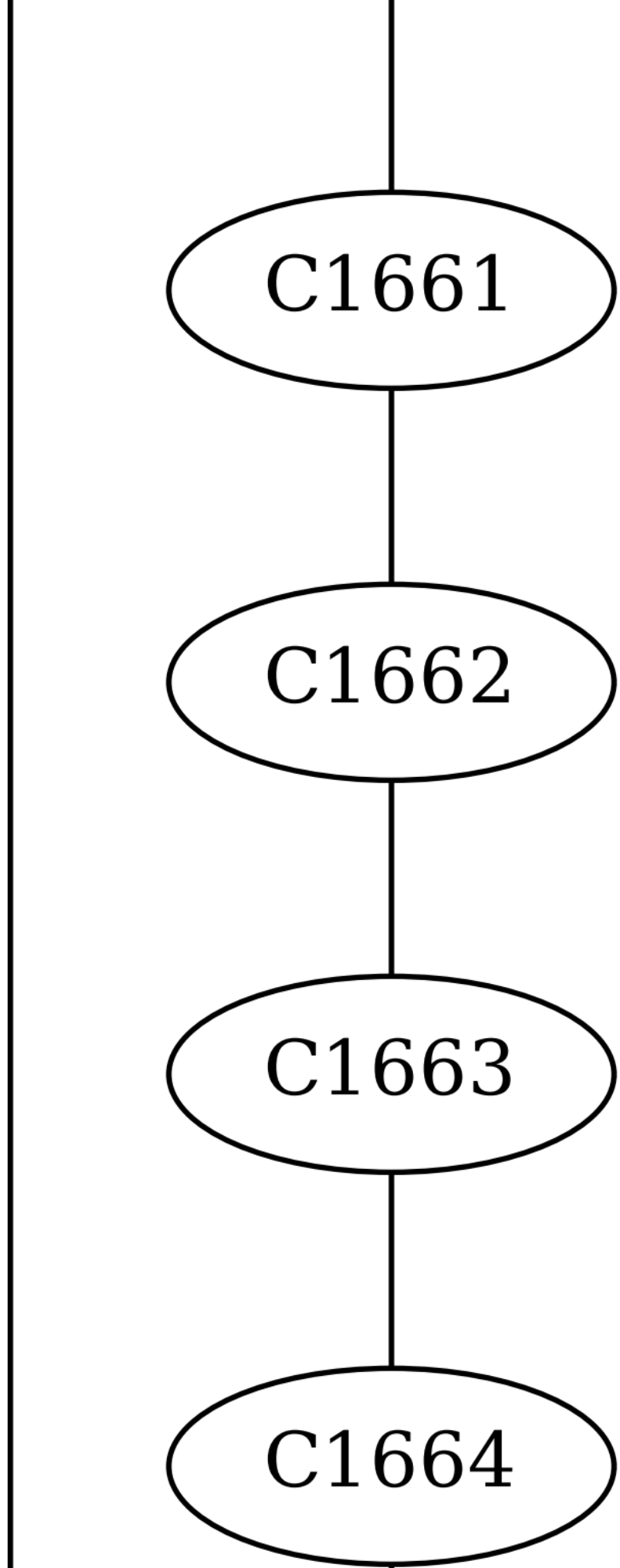
C1661
C1662
C1663
C1664

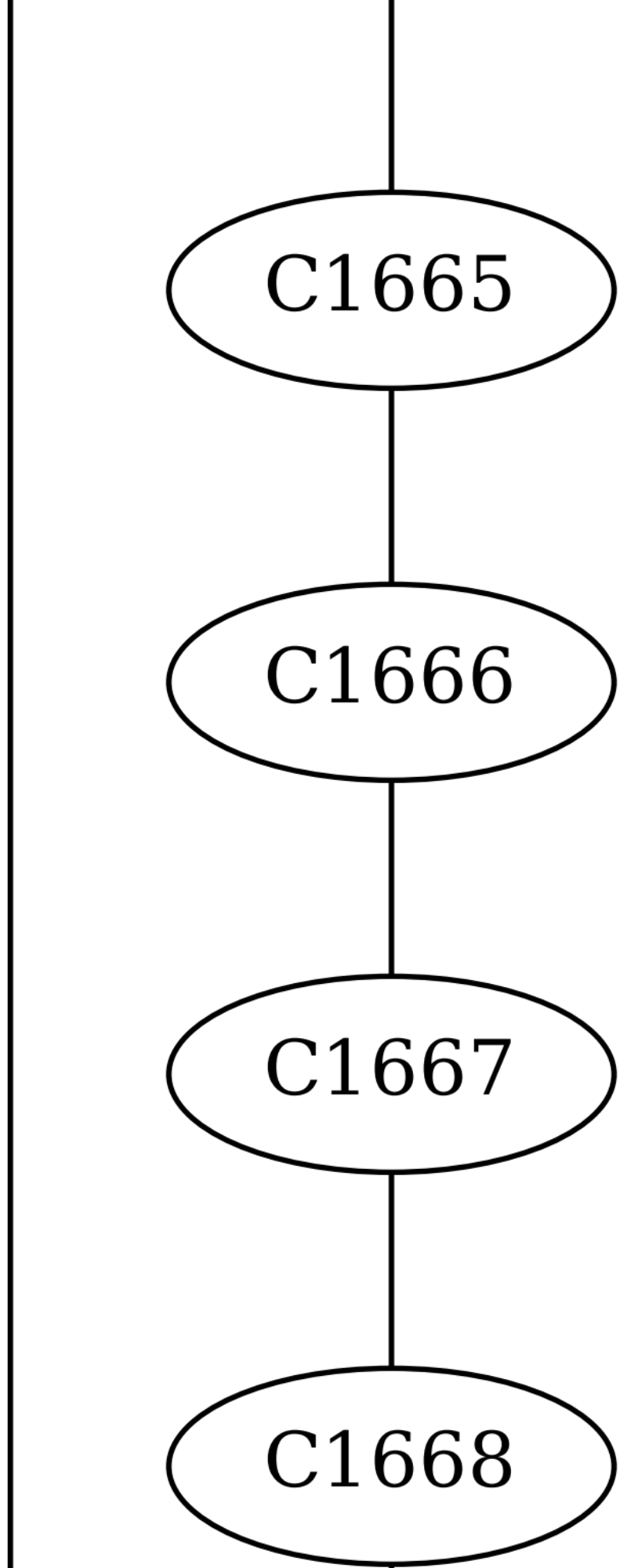
C1665
C1666
C1667
C1668

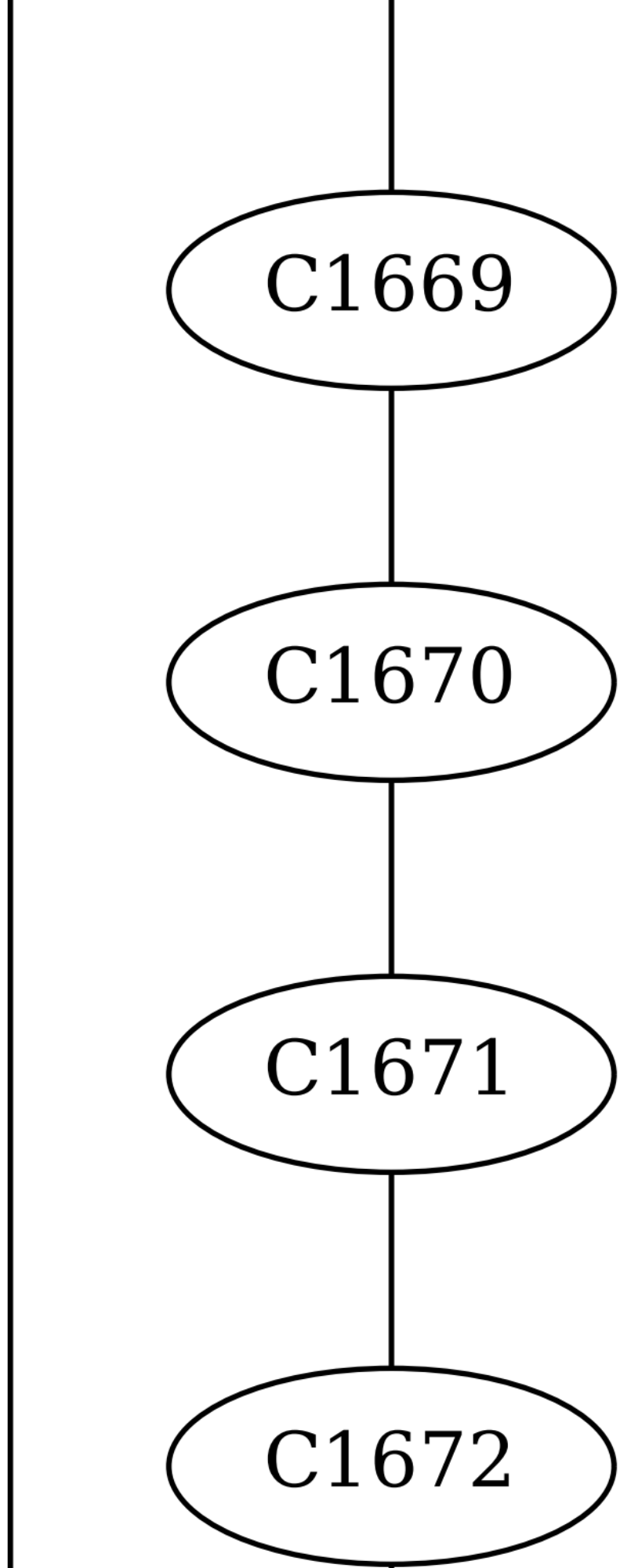
C1669
C1670
C1671
C1672

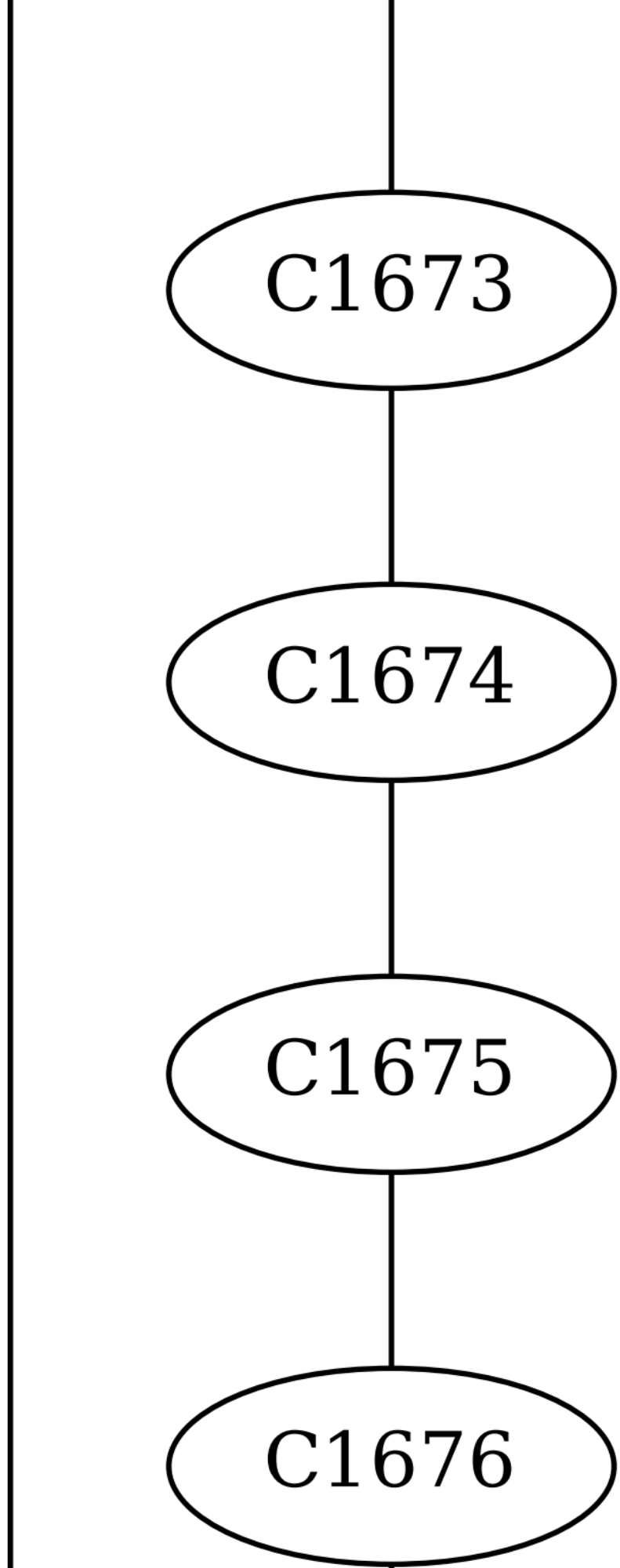
C1673
C1674
C1675
C1676

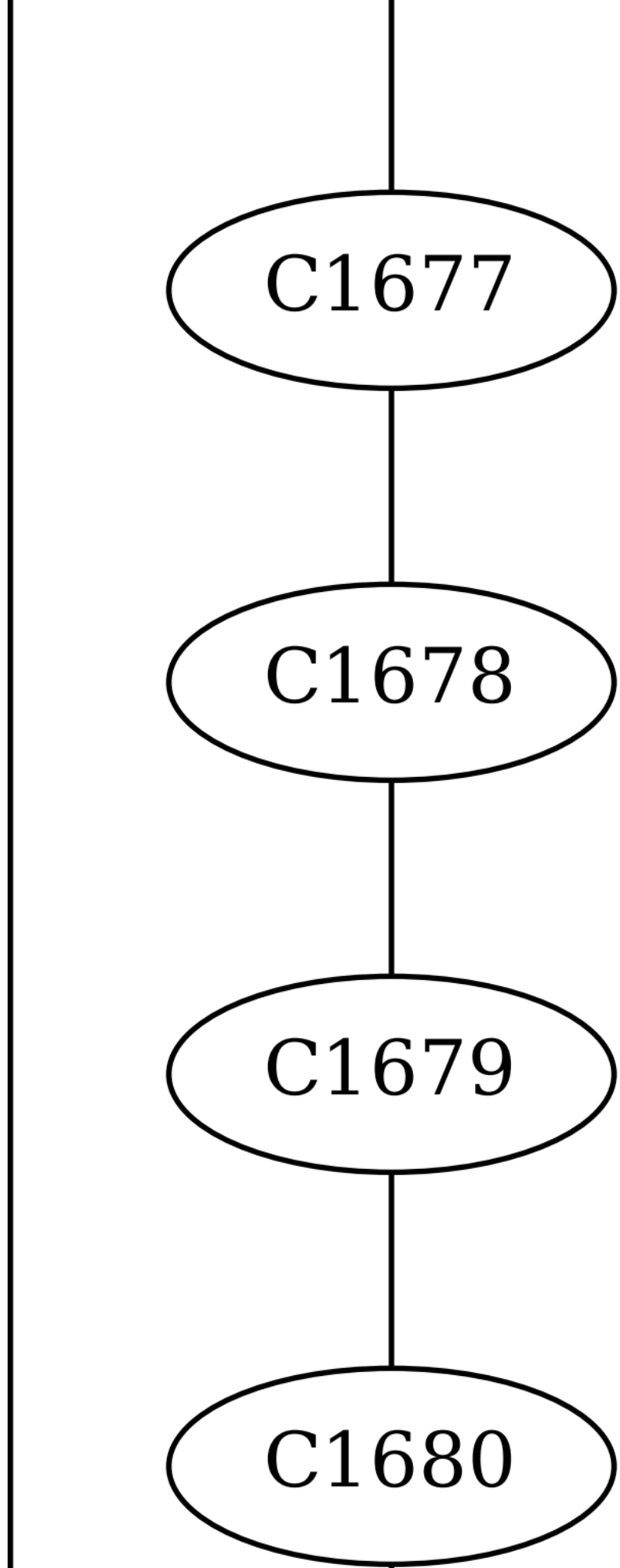
C1677
C1678
C1679
C1680

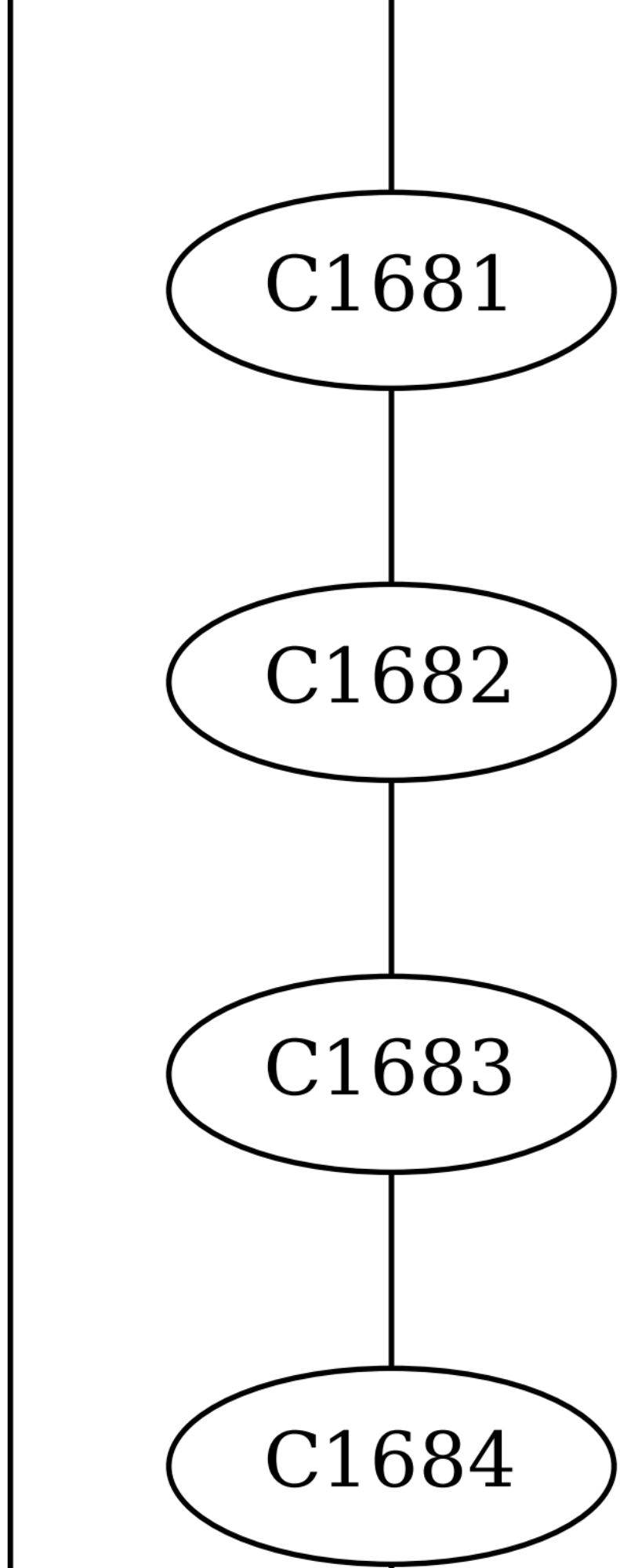
C1681
C1682
C1683
C1684

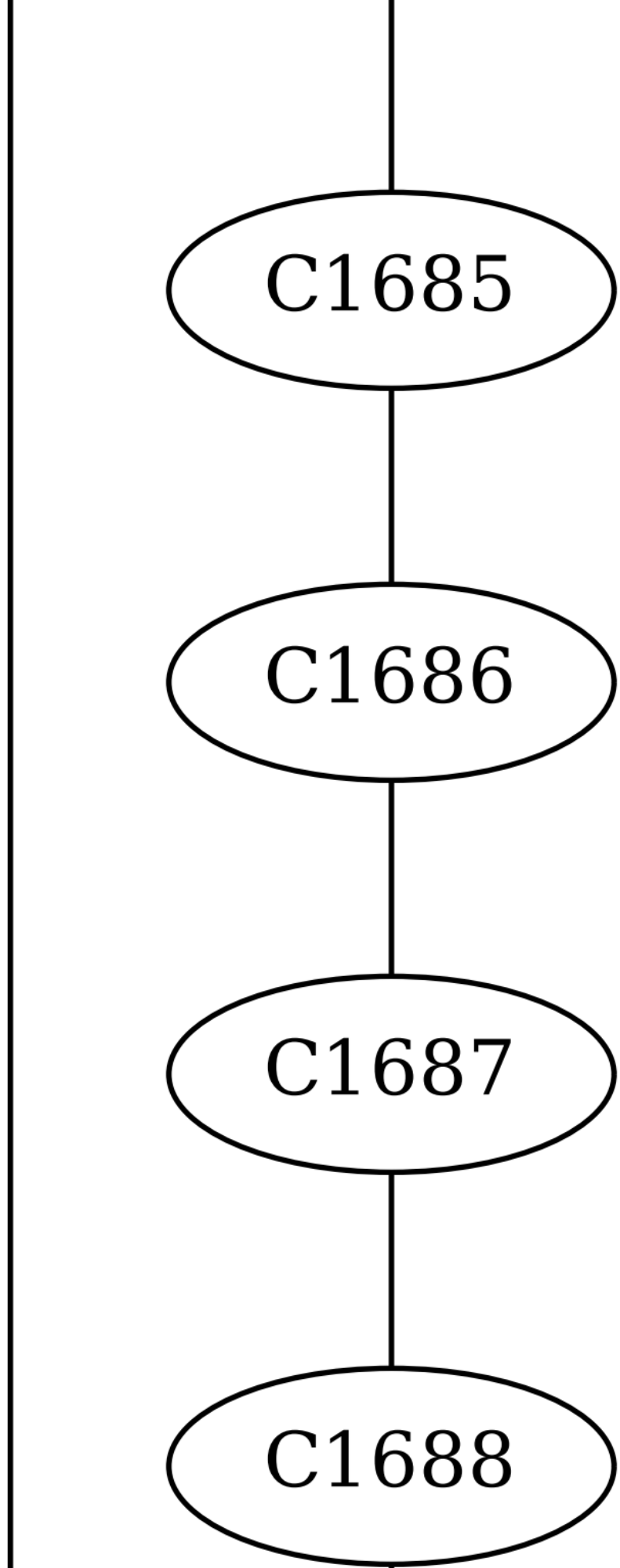
C1685
C1686
C1687
C1688

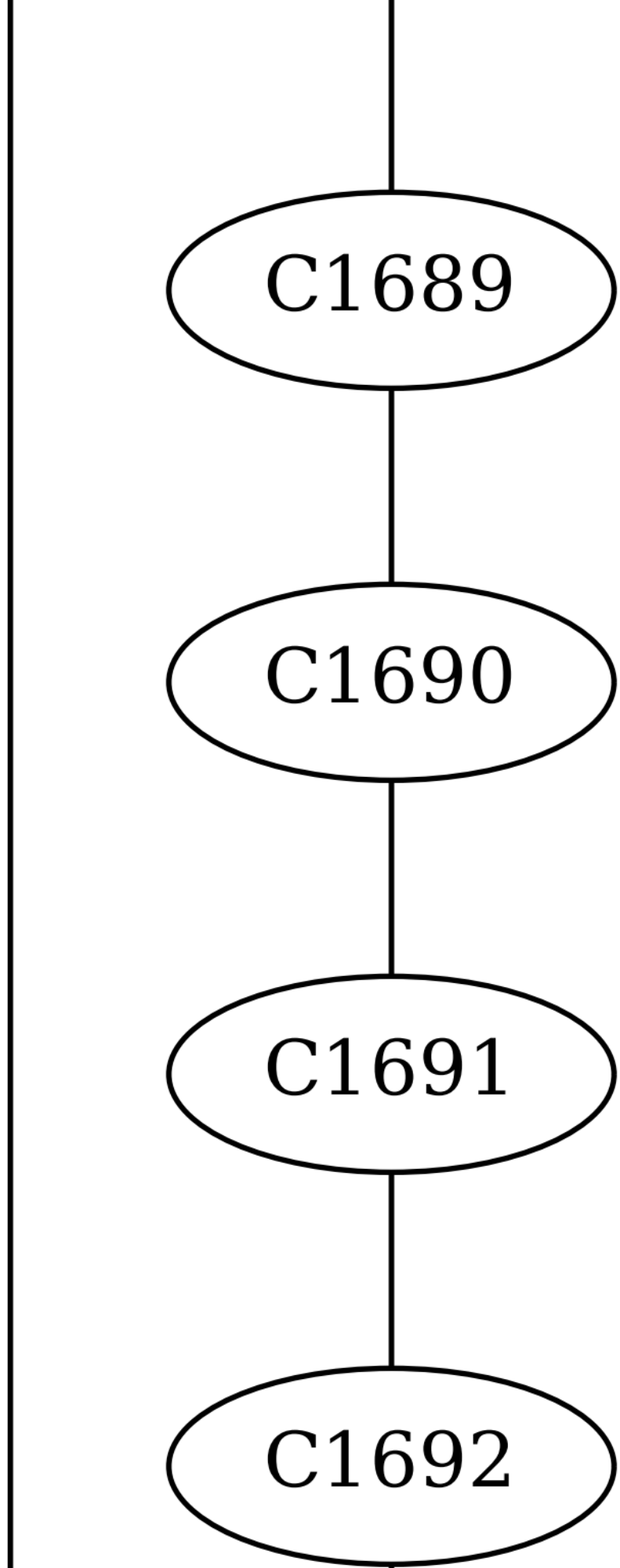
C1689
C1690
C1691
C1692

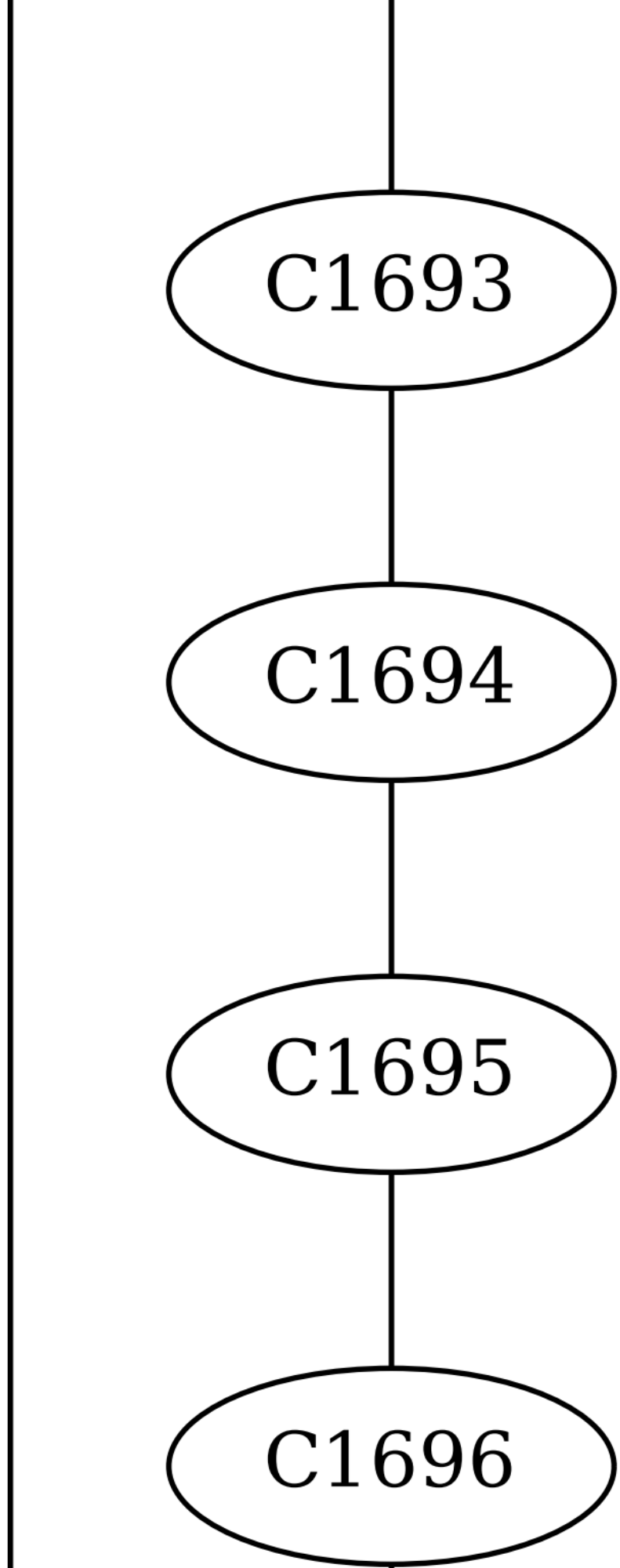
C1693
C1694
C1695
C1696

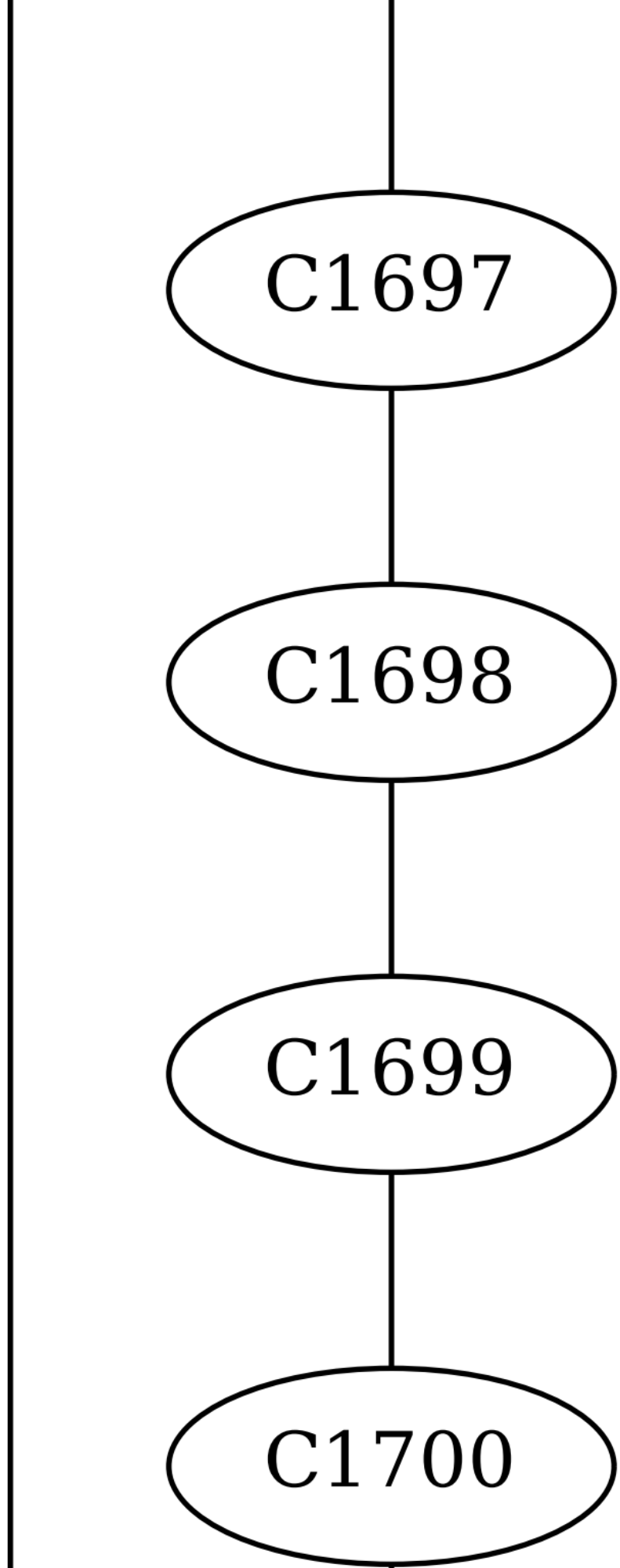
C1697
C1698
C1699
C1700

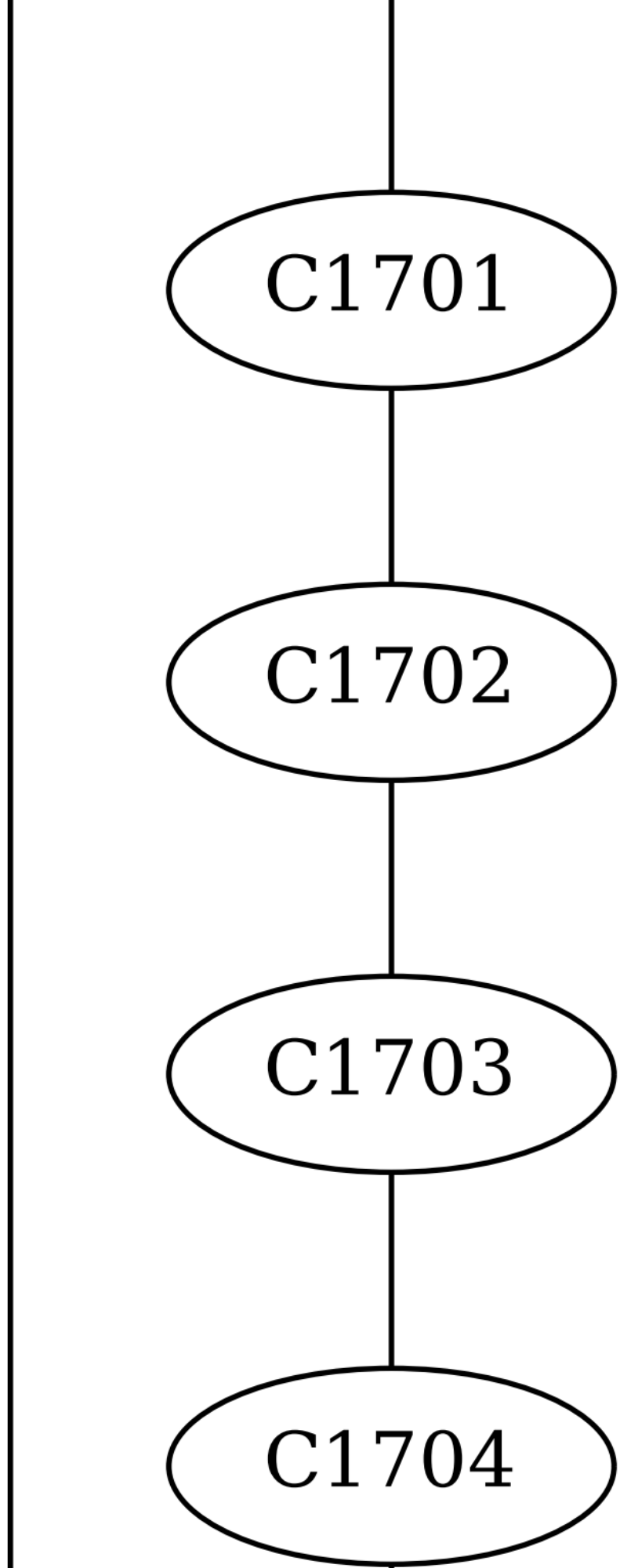
C1701
C1702
C1703
C1704

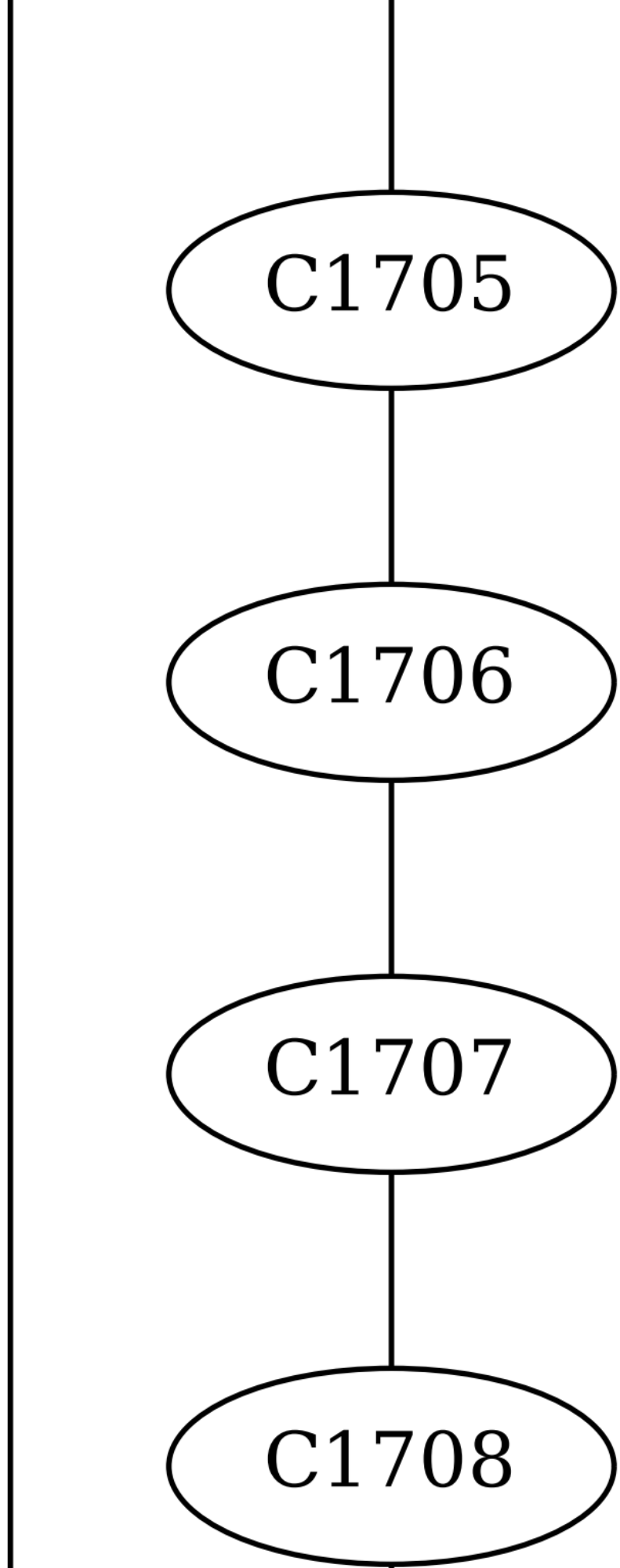
C1705
C1706
C1707
C1708

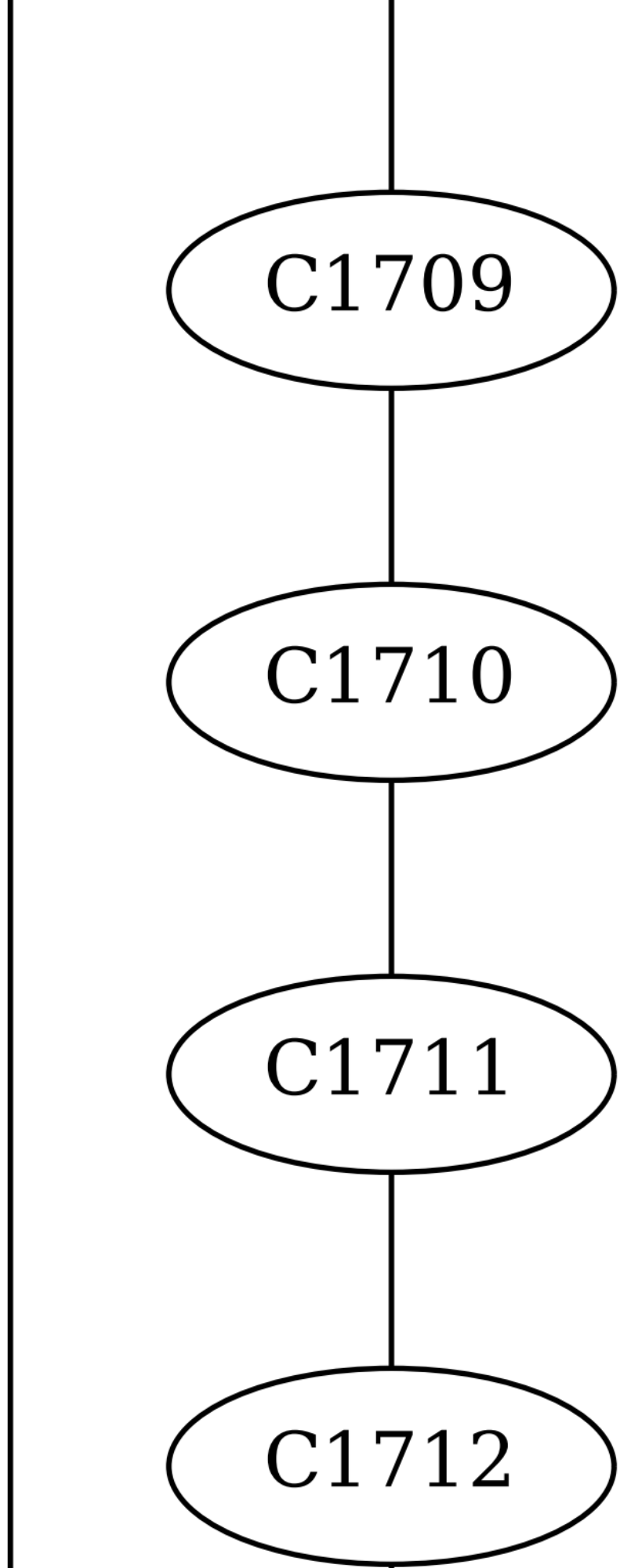
C1709
C1710
C1711
C1712

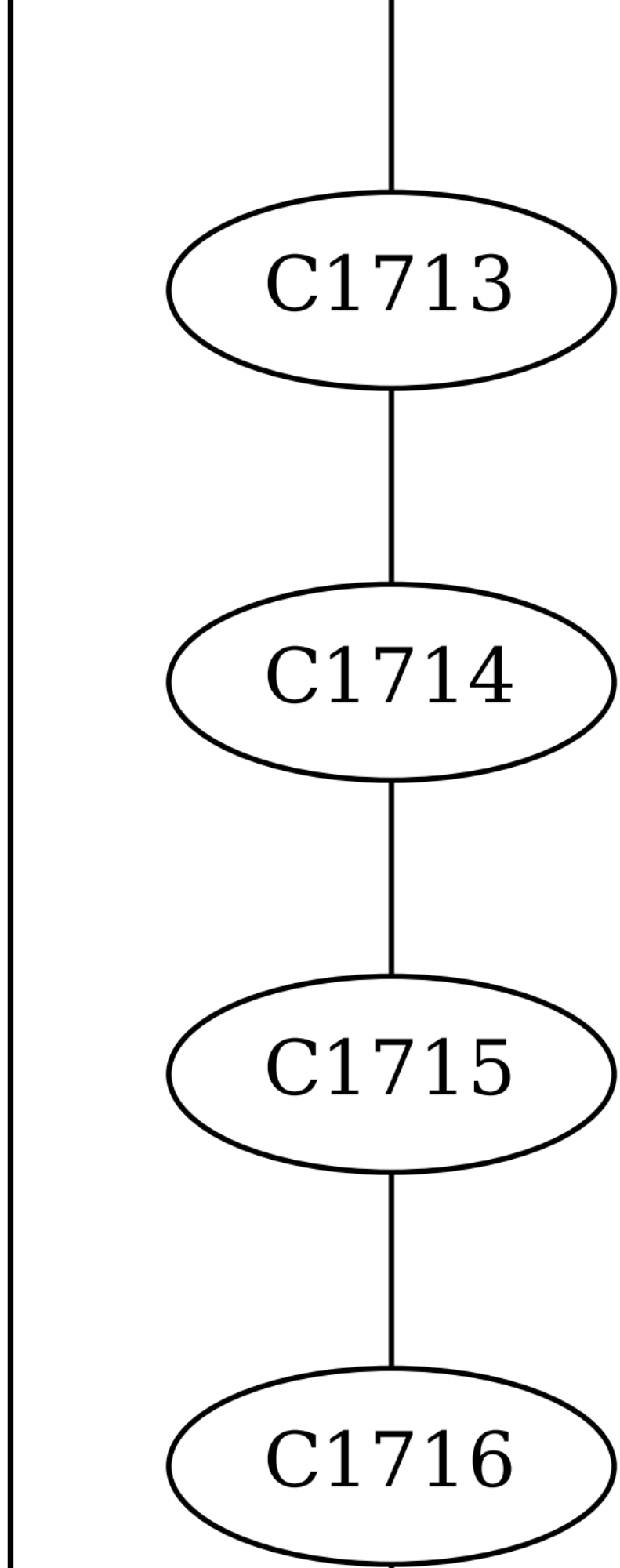
C1713
C1714
C1715
C1716

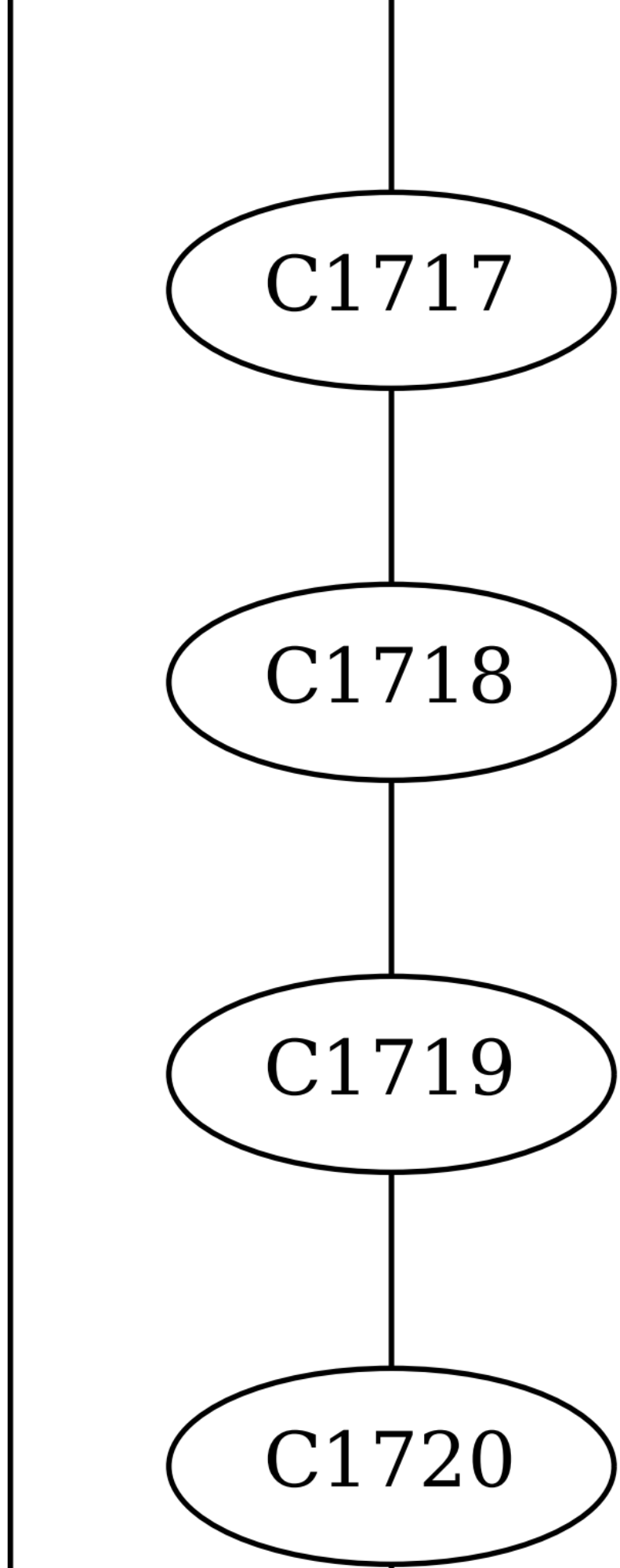
C1717
C1718
C1719
C1720

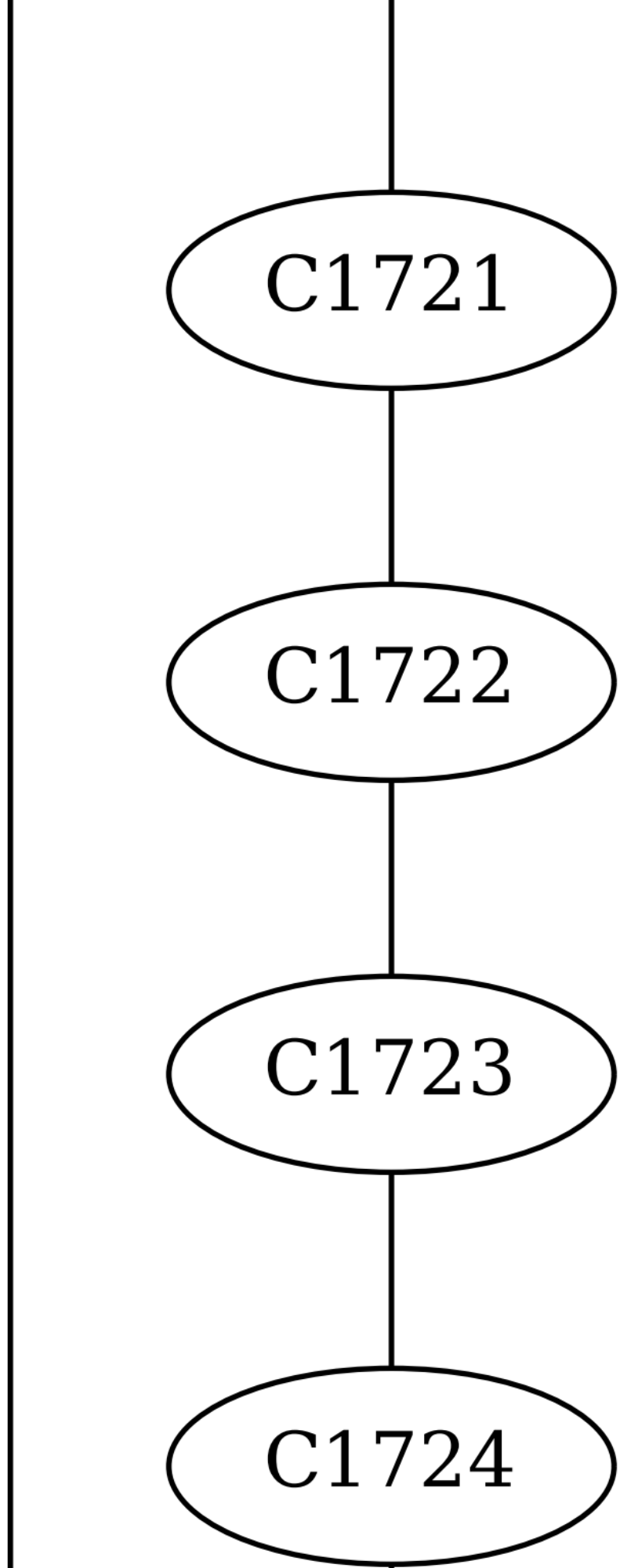
C1721
C1722
C1723
C1724

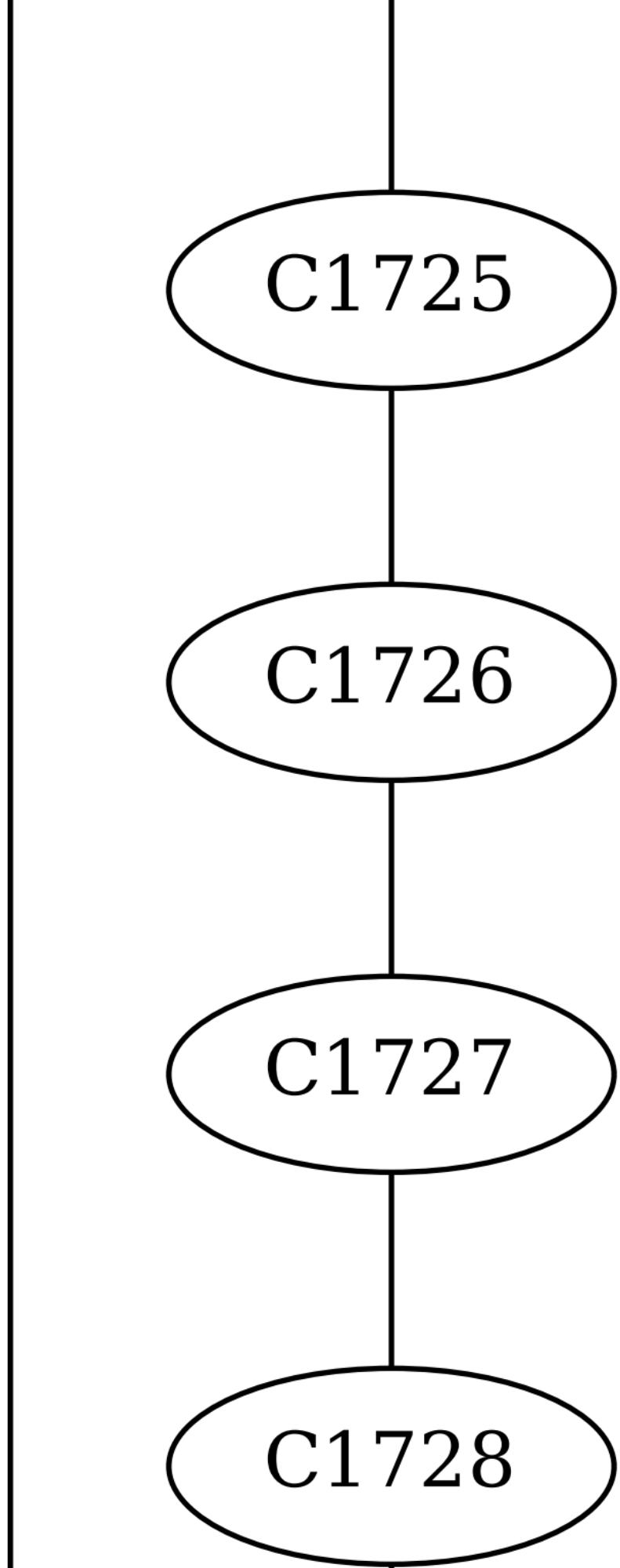
C1725
C1726
C1727
C1728

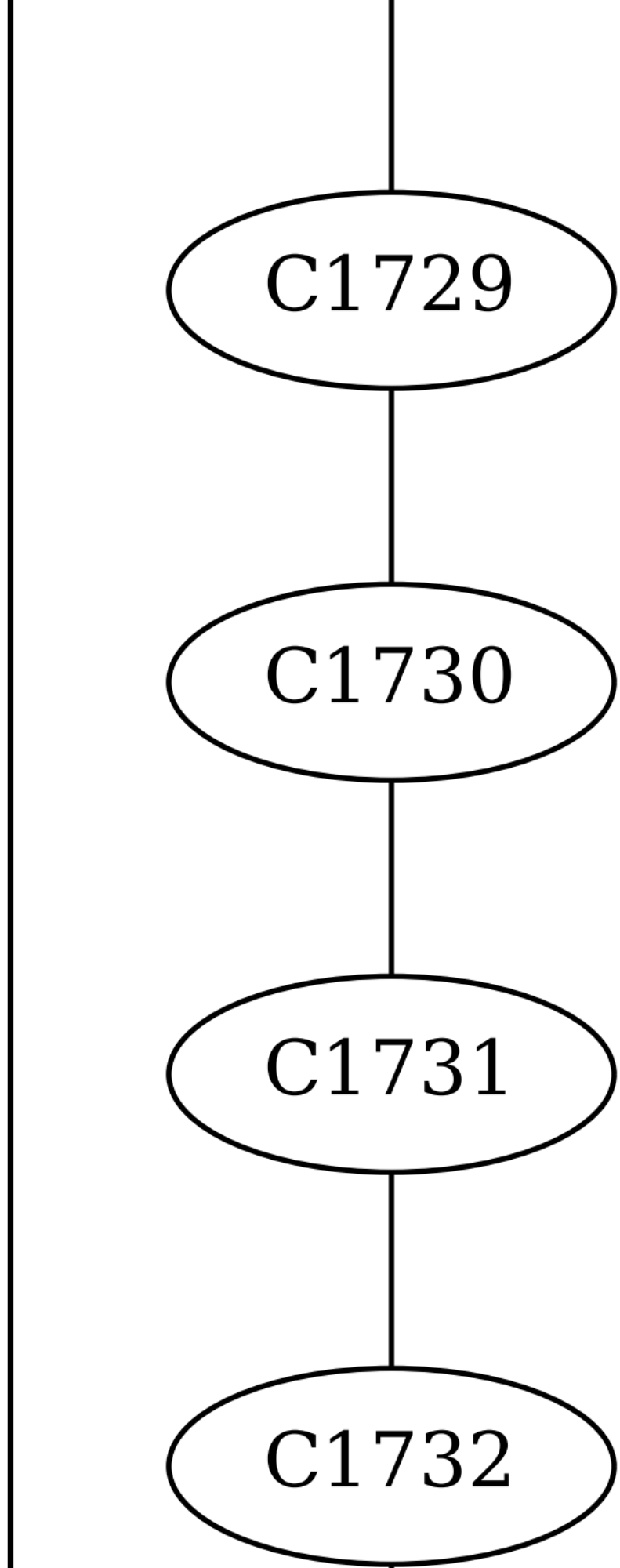
C1729
C1730
C1731
C1732

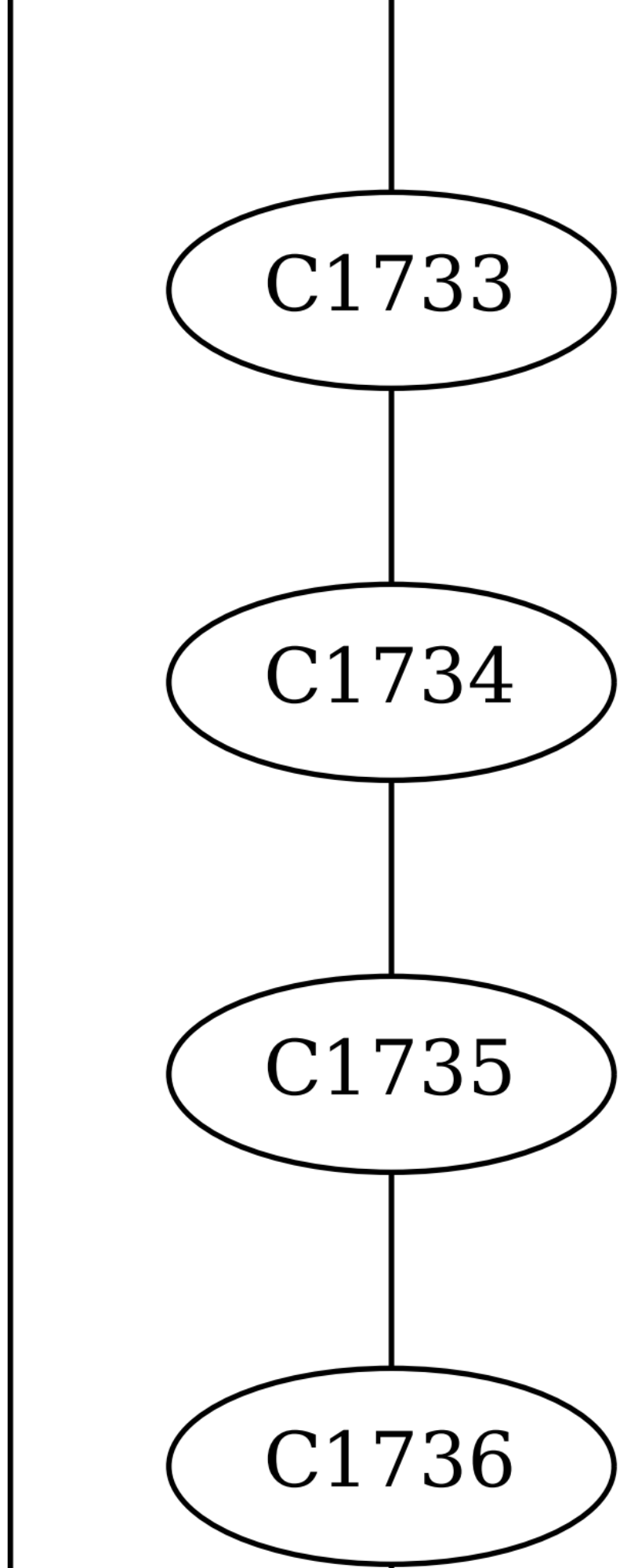
C1733
C1734
C1735
C1736

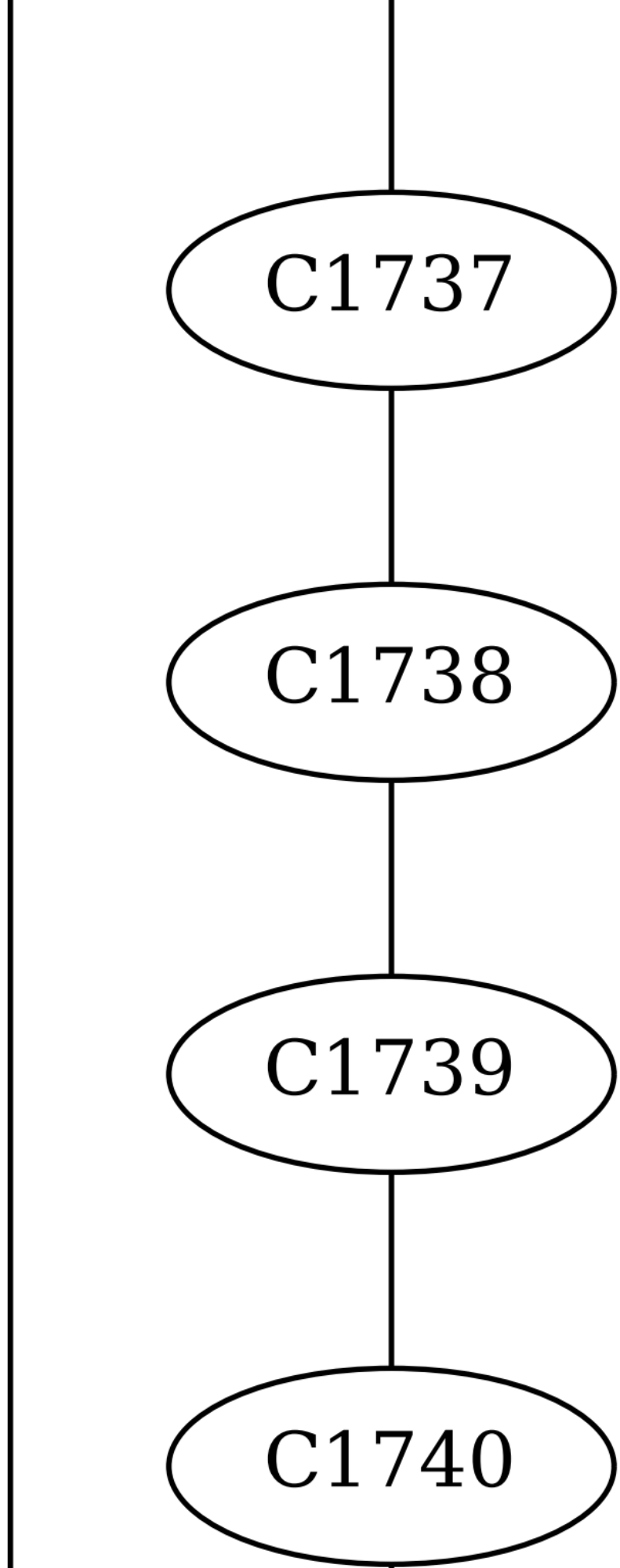
C1737
C1738
C1739
C1740

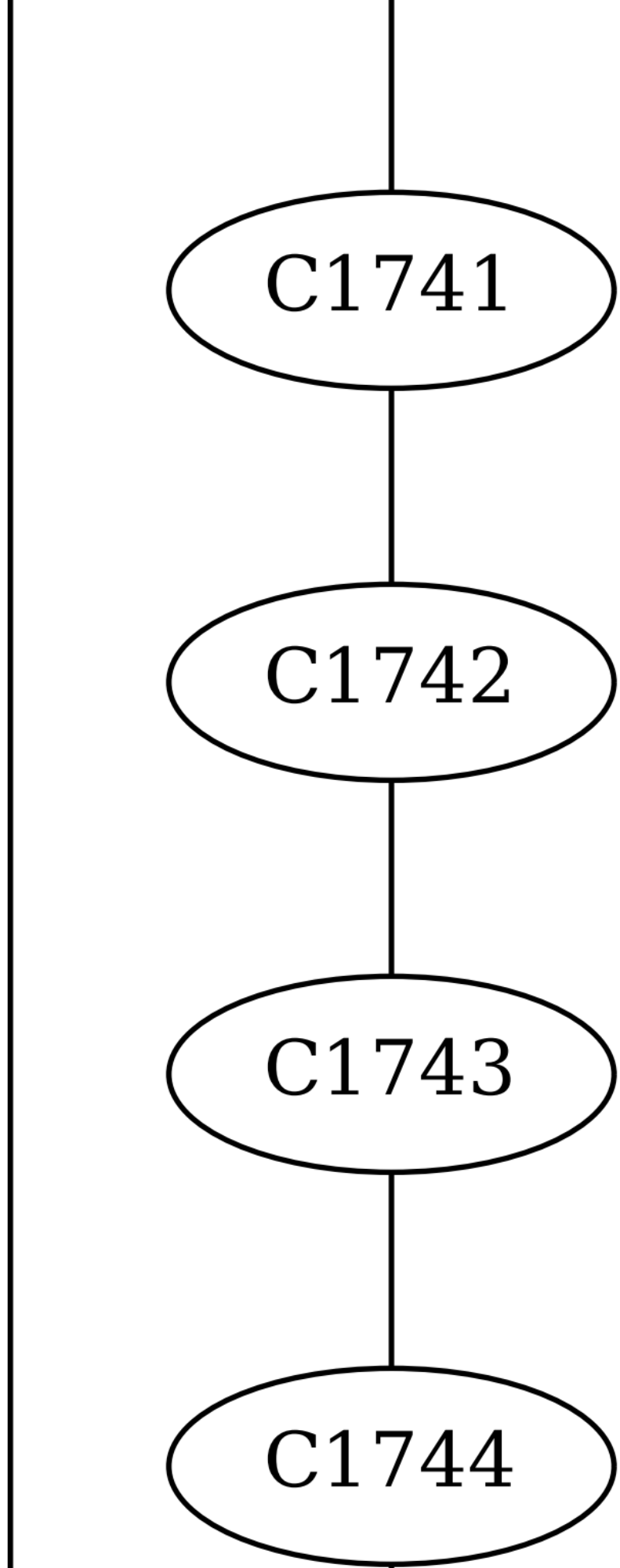
C1741
C1742
C1743
C1744

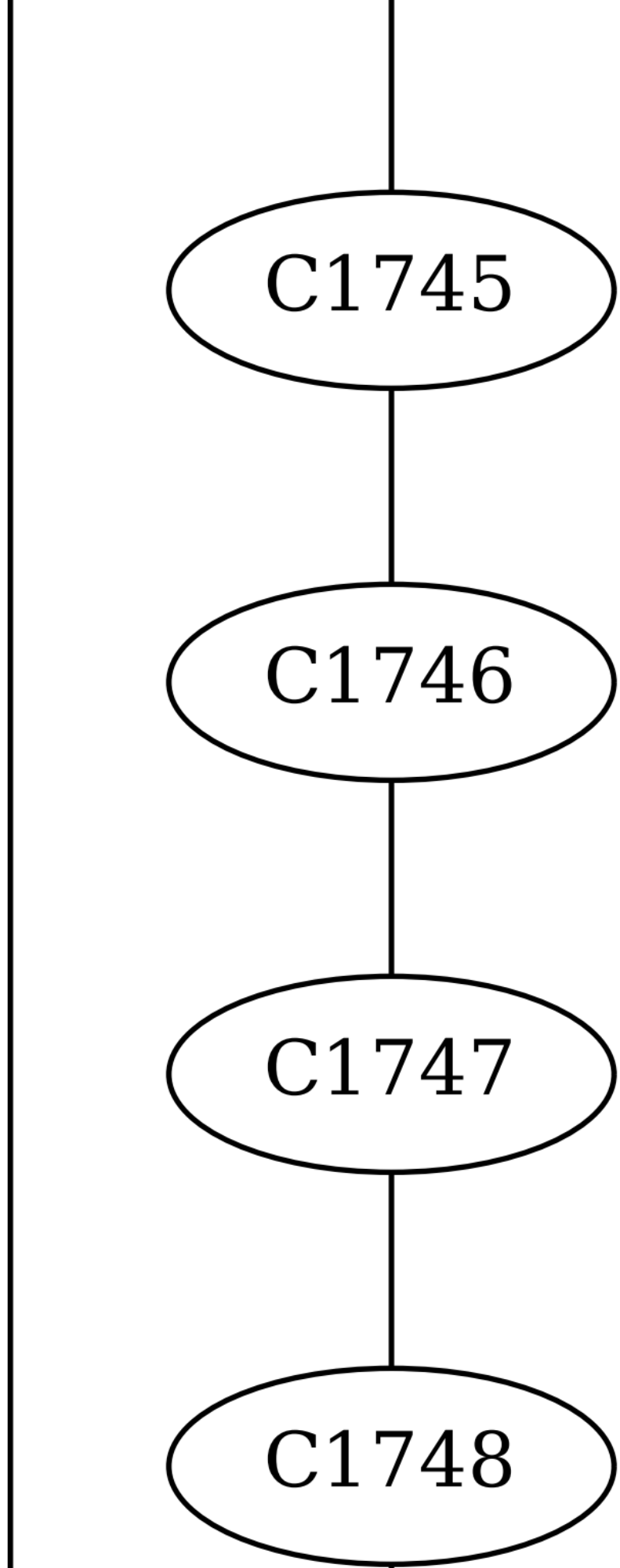
C1745
C1746
C1747
C1748

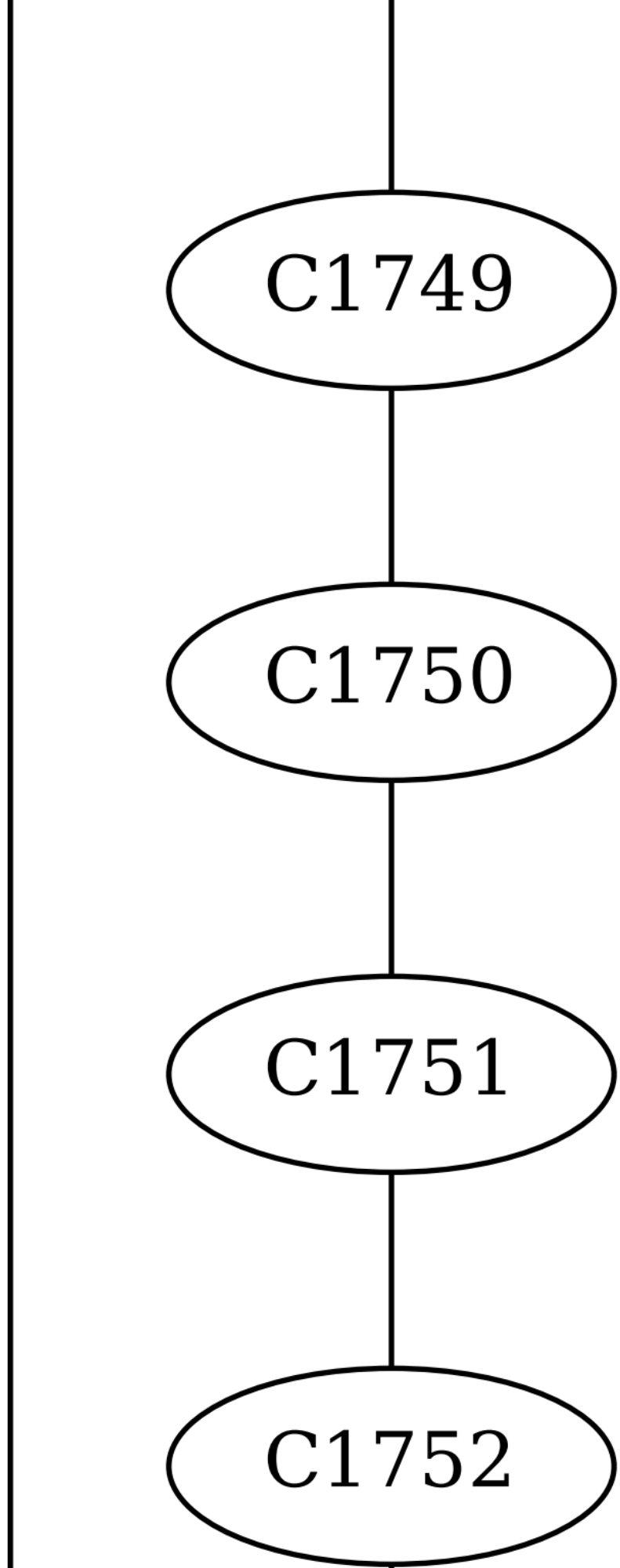
C1749
C1750
C1751
C1752

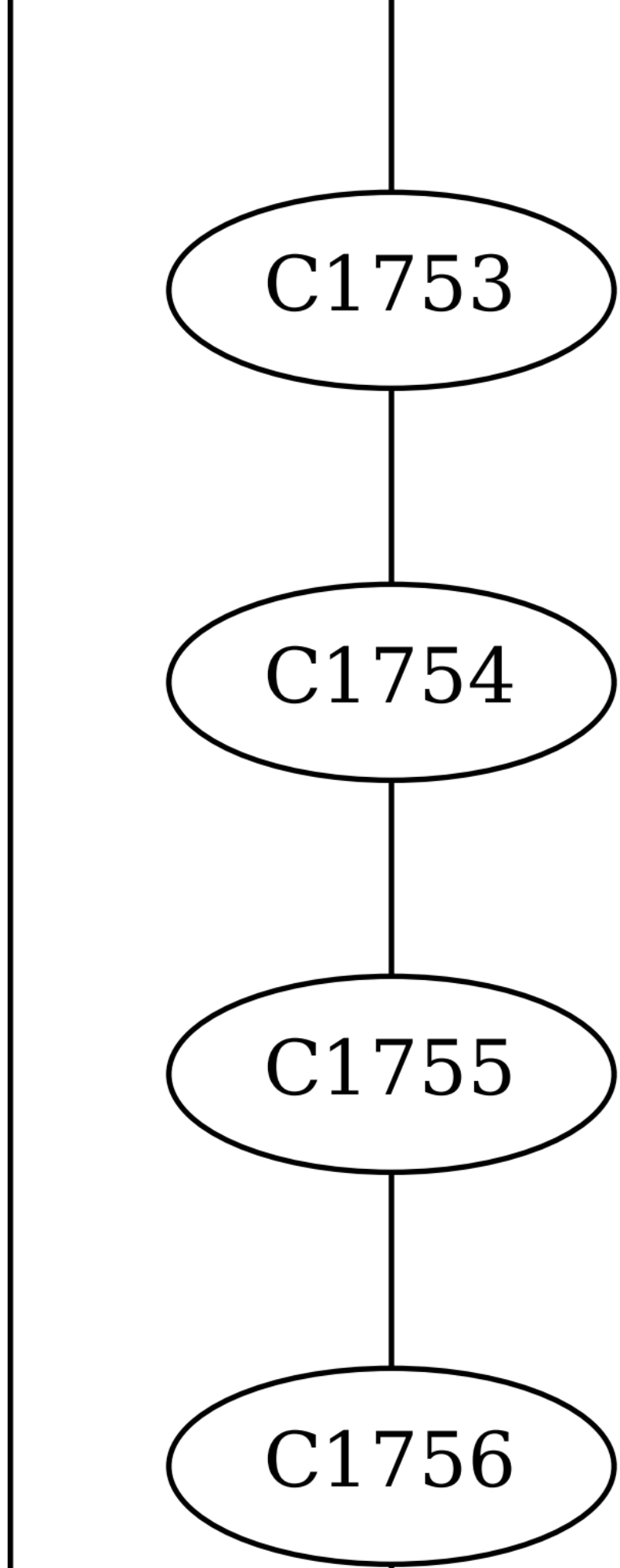
C1753
C1754
C1755
C1756

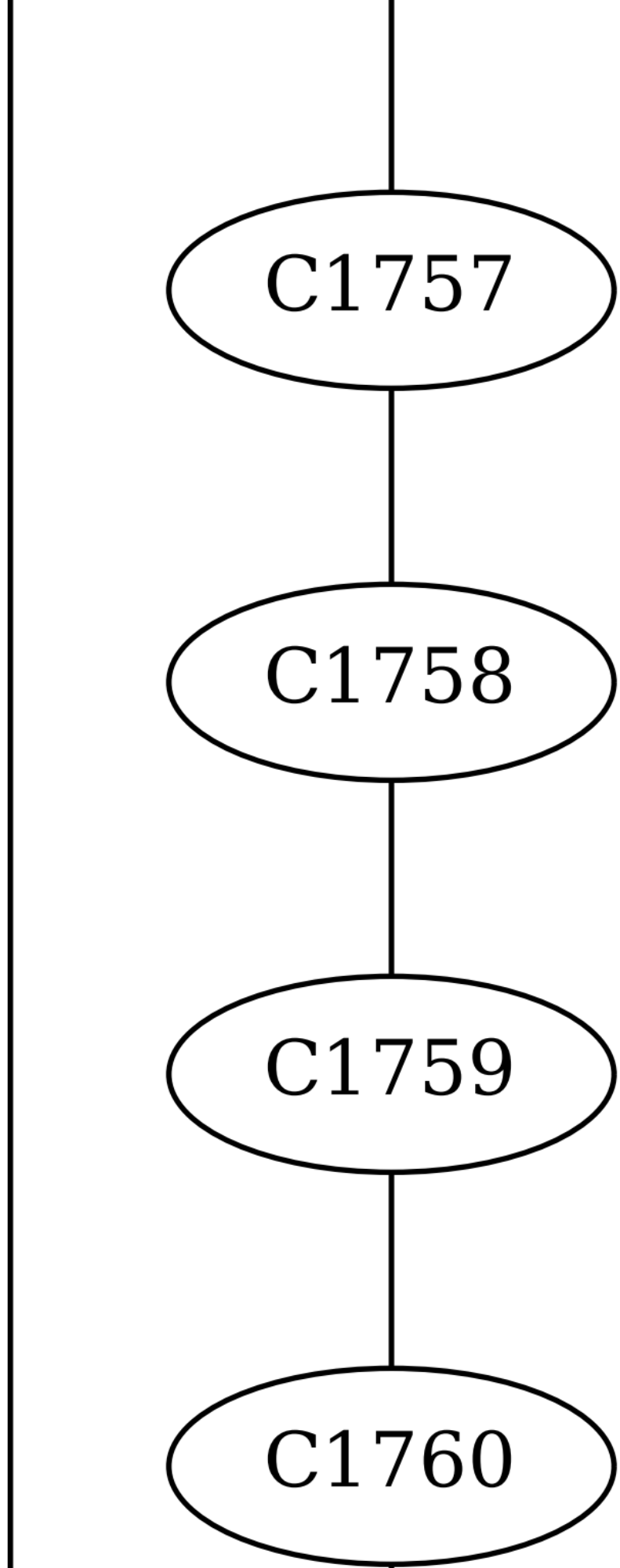
C1757
C1758
C1759
C1760

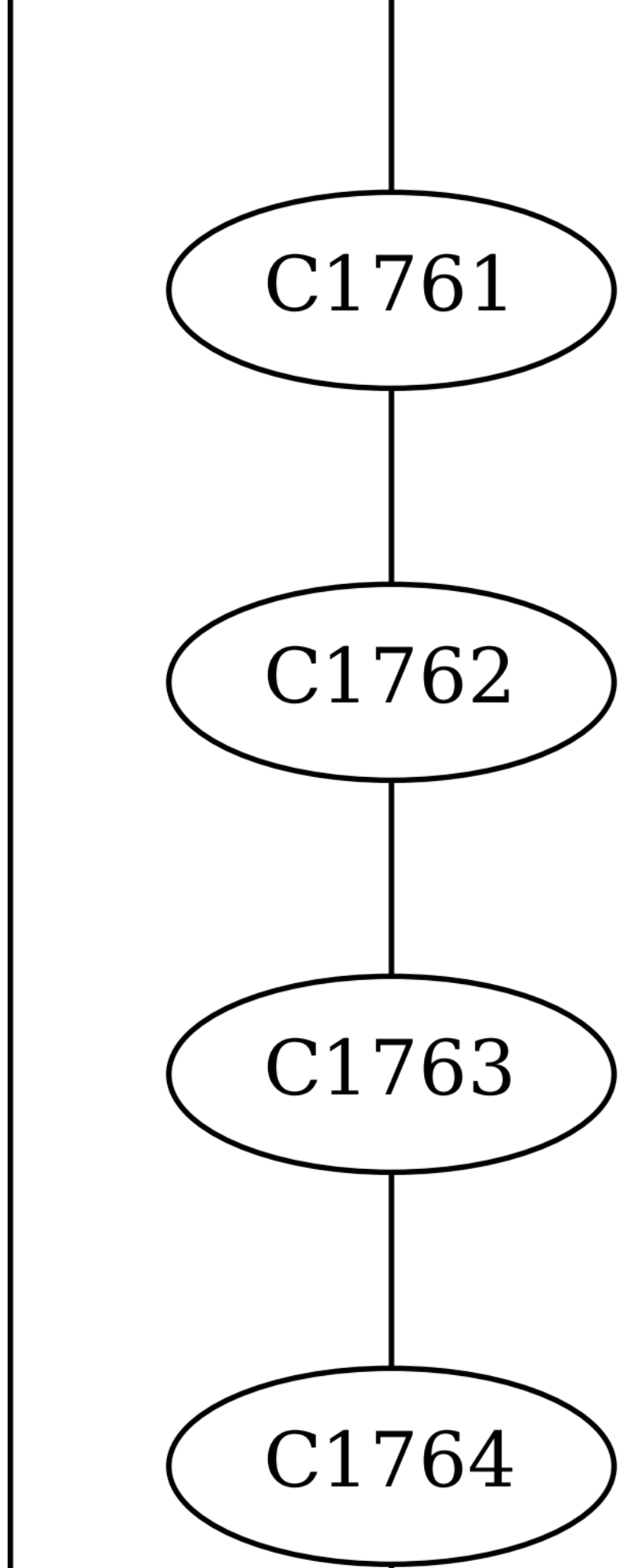
C1761
C1762
C1763
C1764

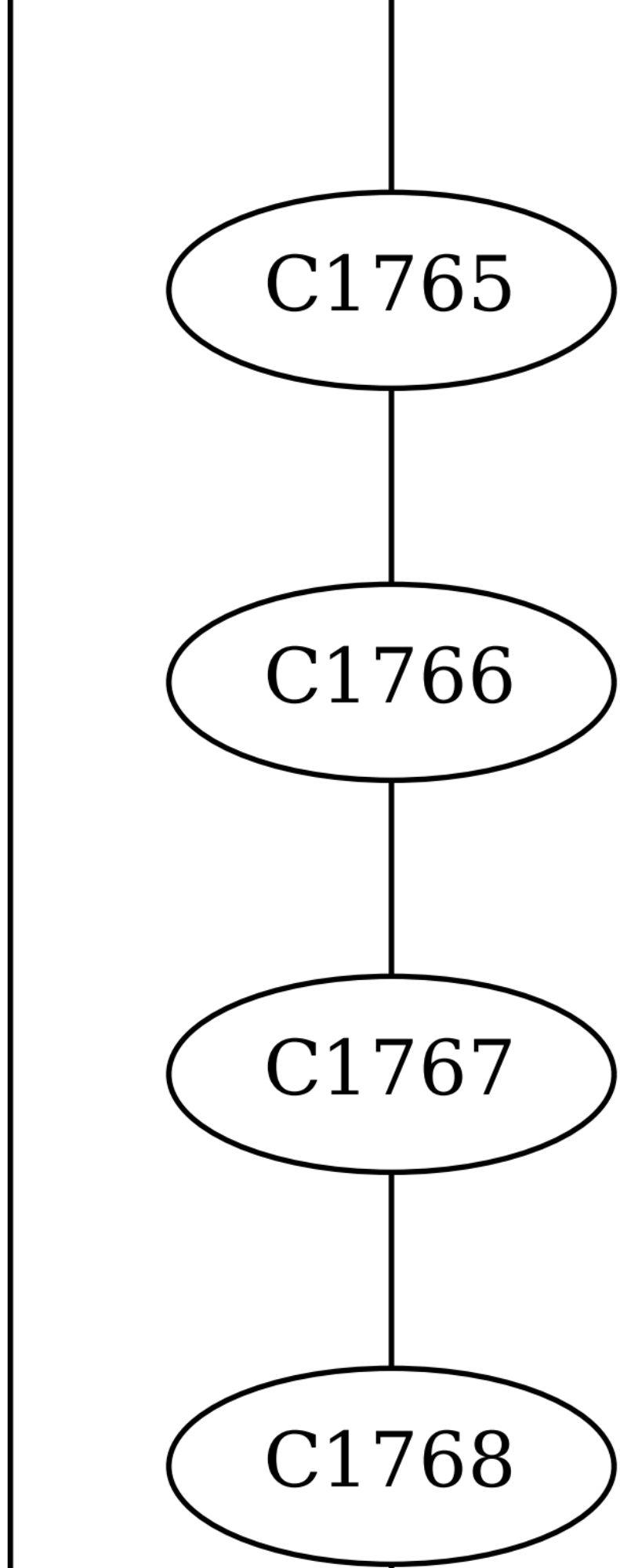
C1765
C1766
C1767
C1768

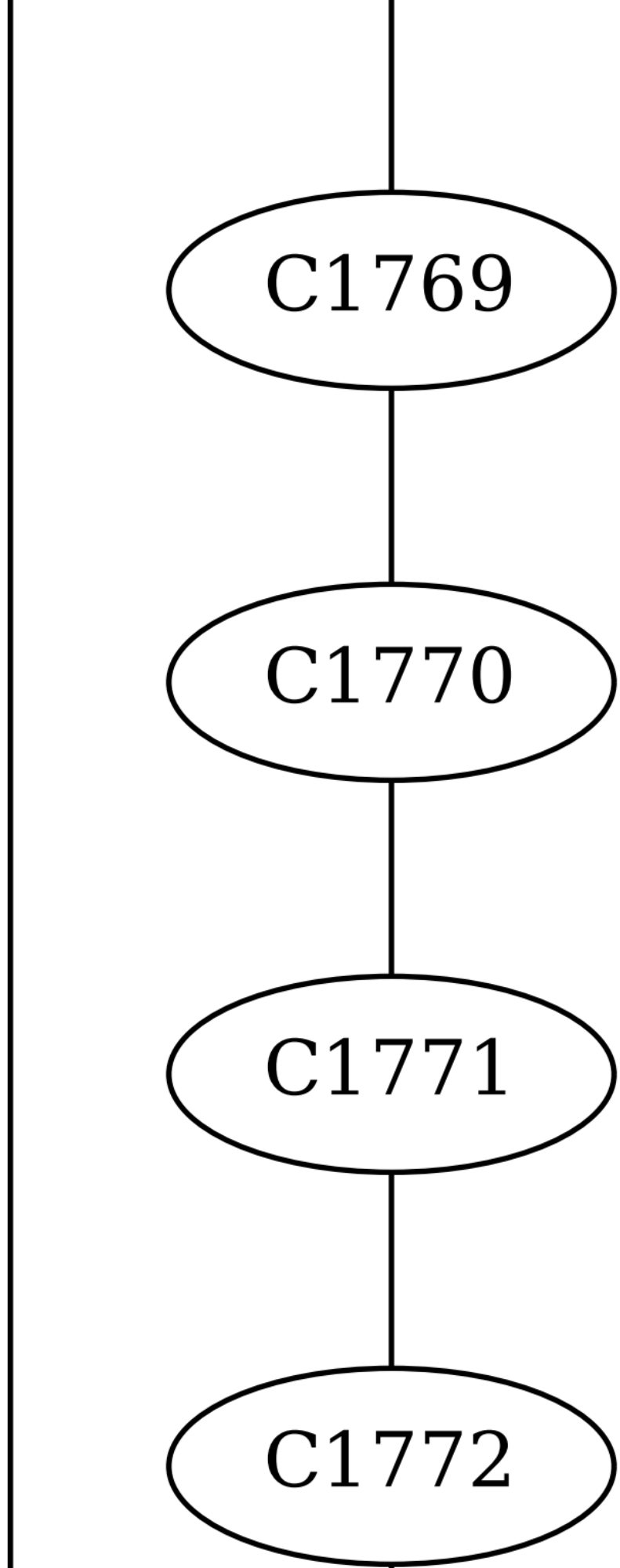
C1769
C1770
C1771
C1772

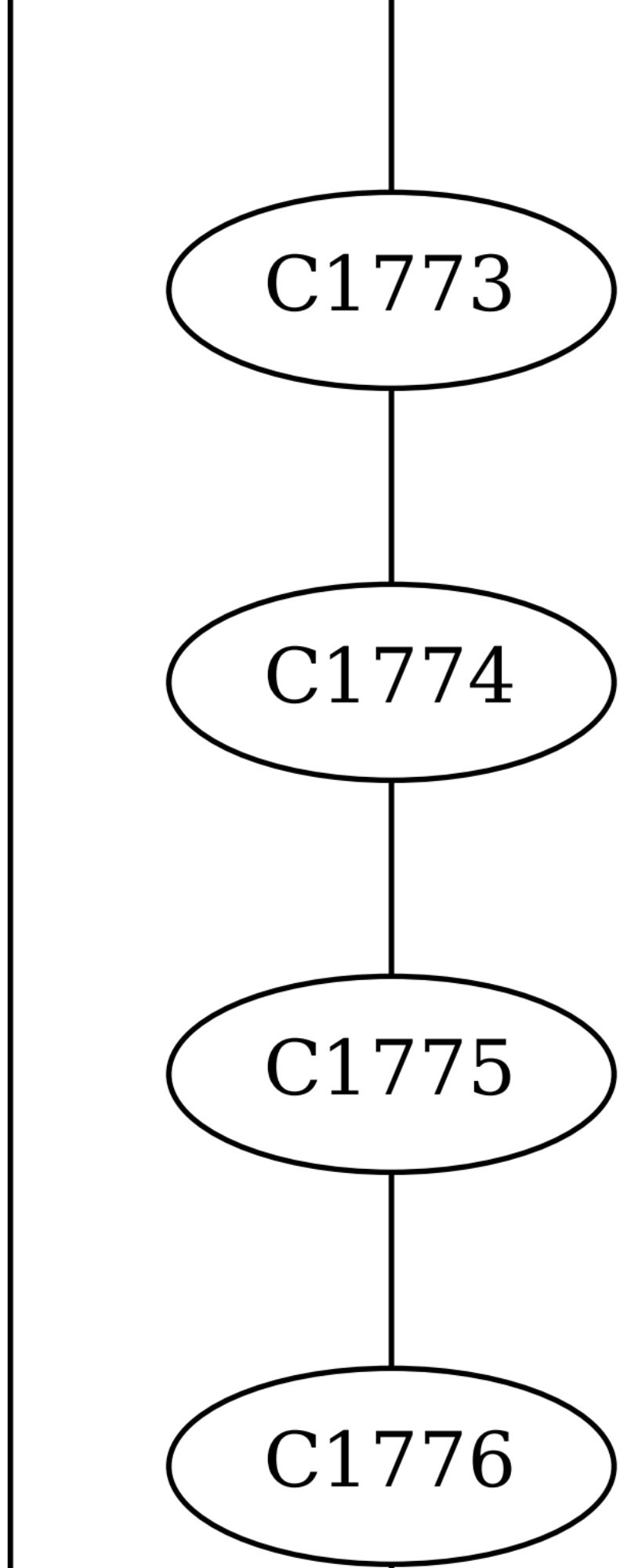
C1773
C1774
C1775
C1776

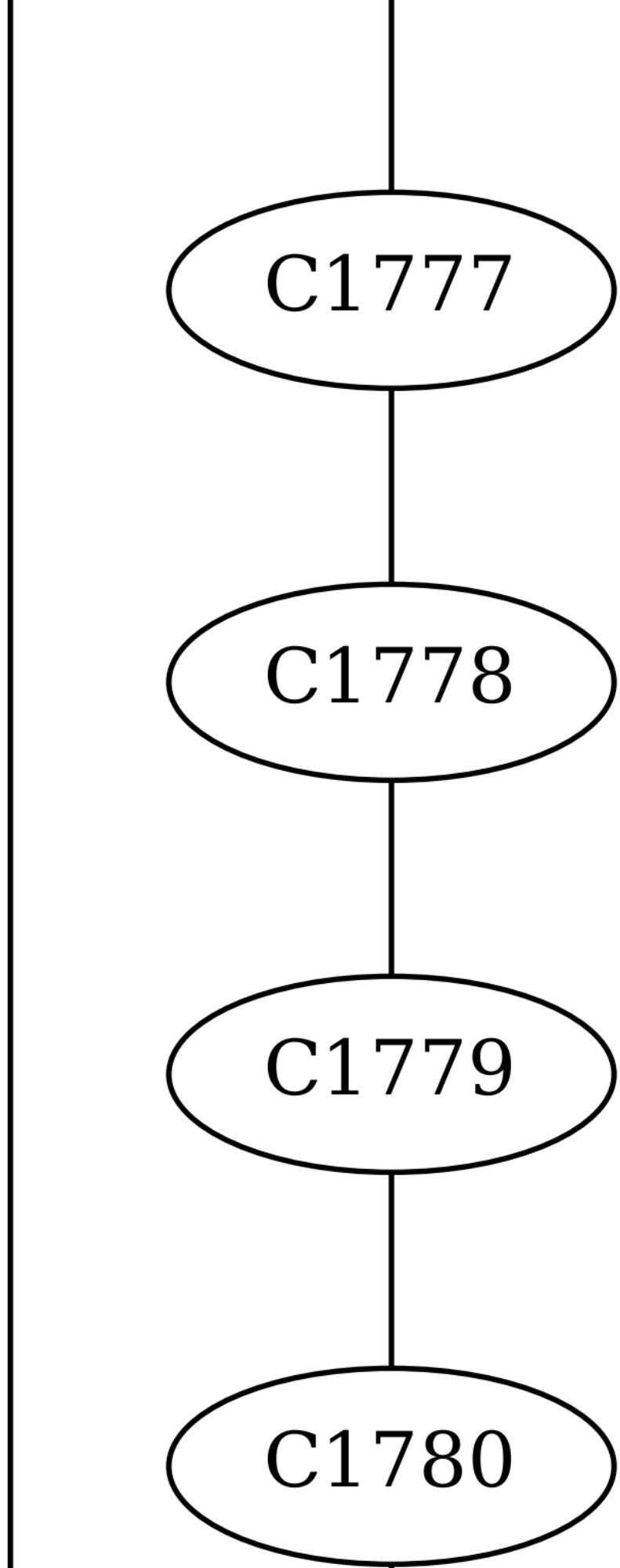
C1777
C1778
C1779
C1780

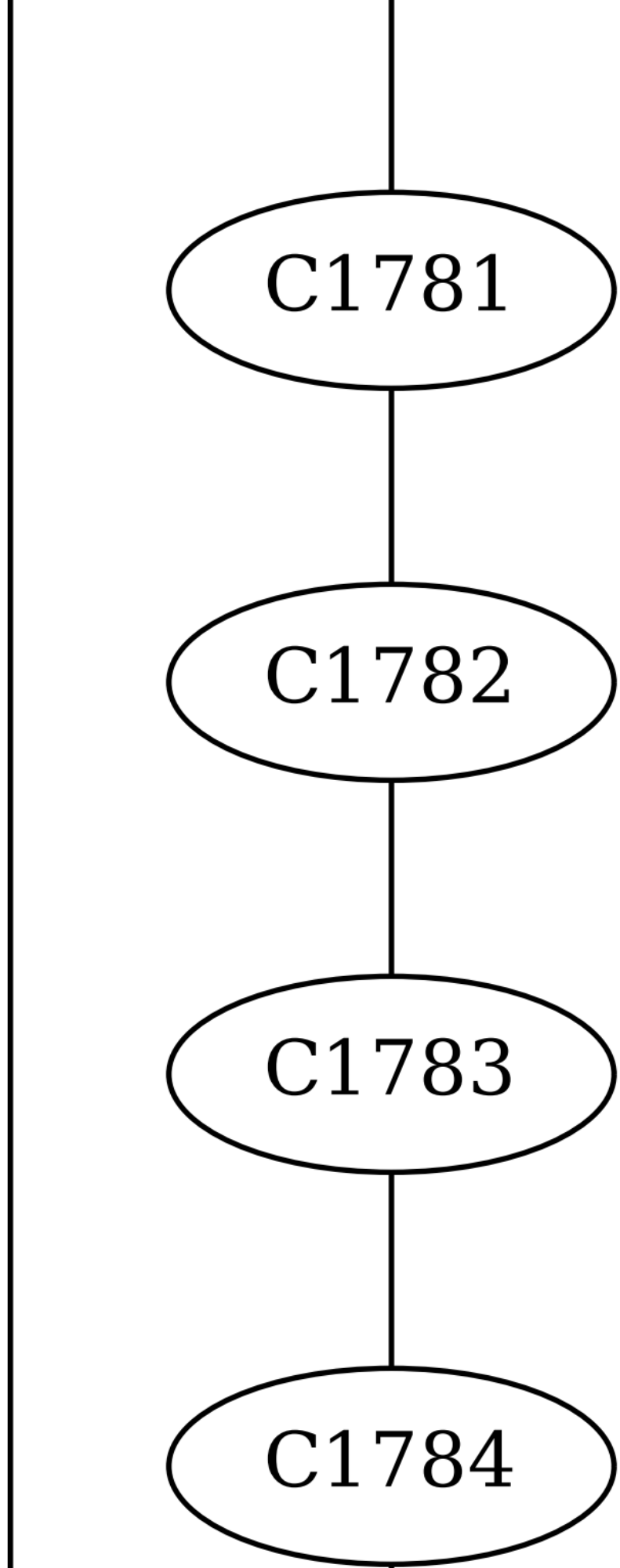
C1781
C1782
C1783
C1784

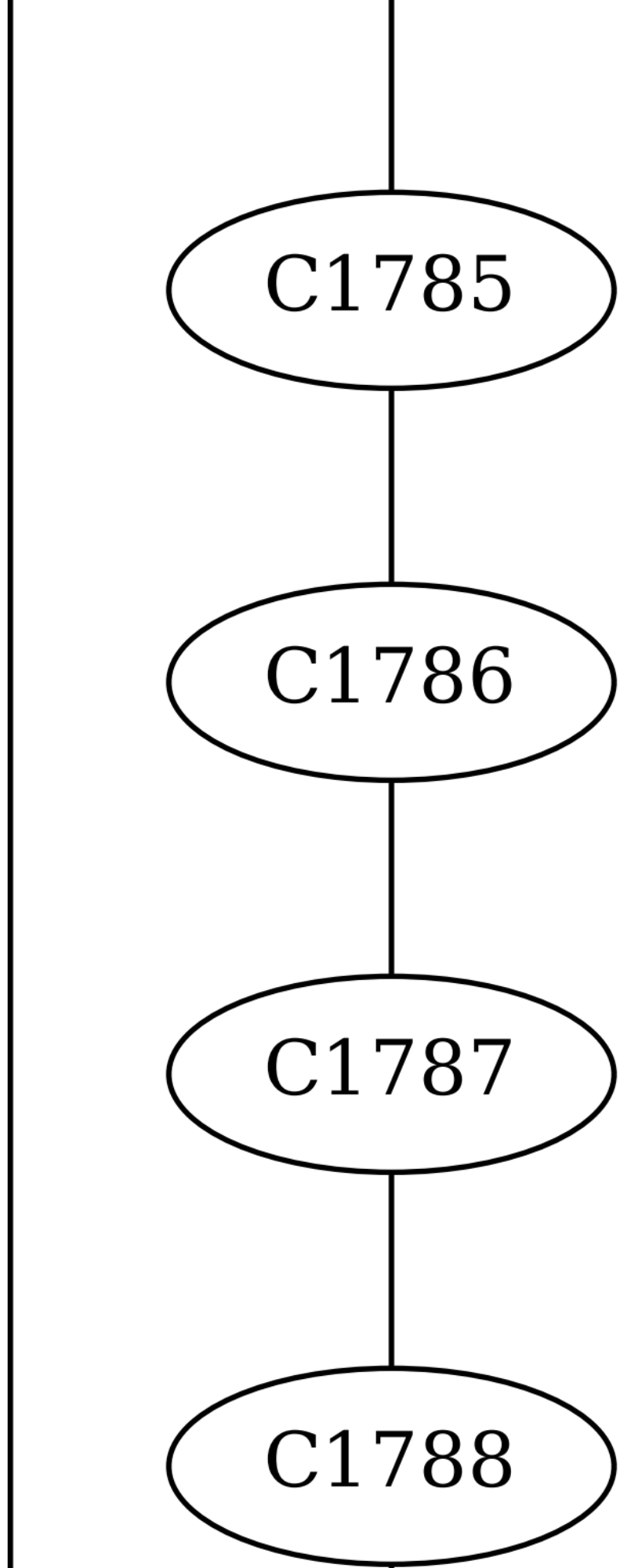
C1785
C1786
C1787
C1788

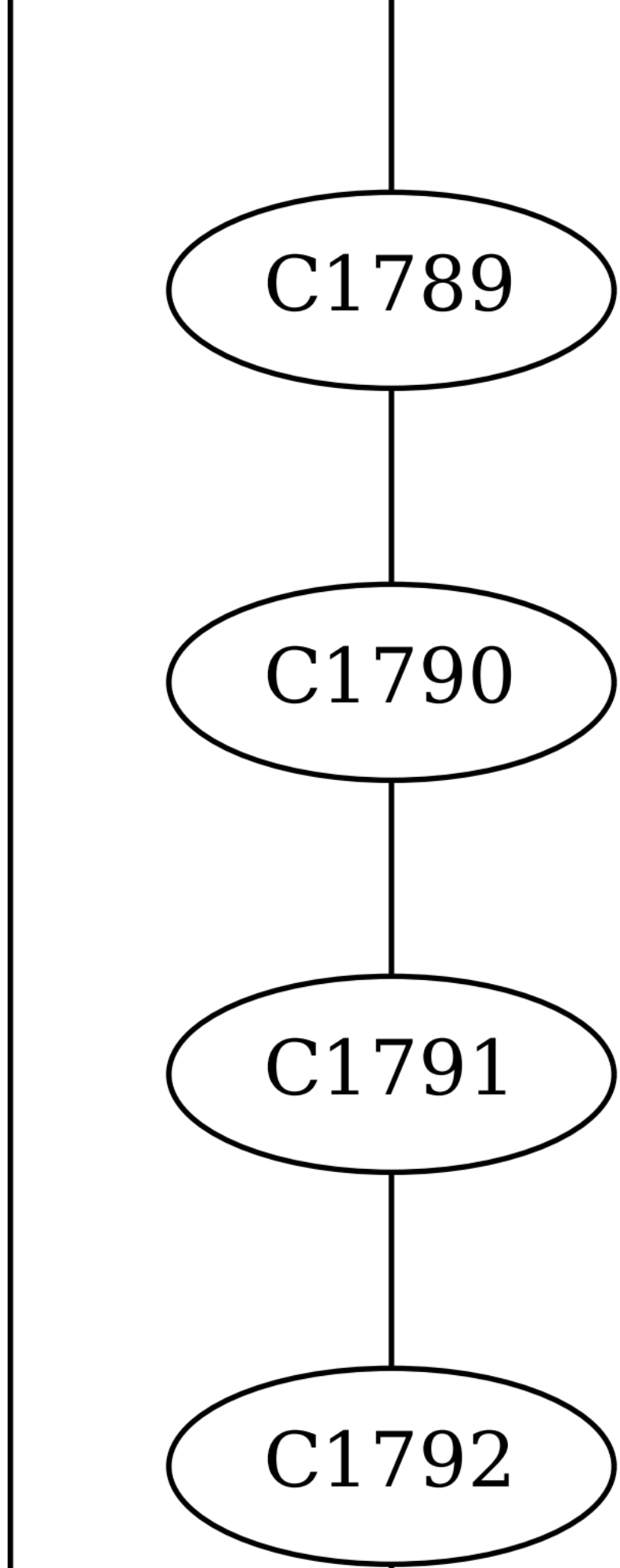
C1789
C1790
C1791
C1792

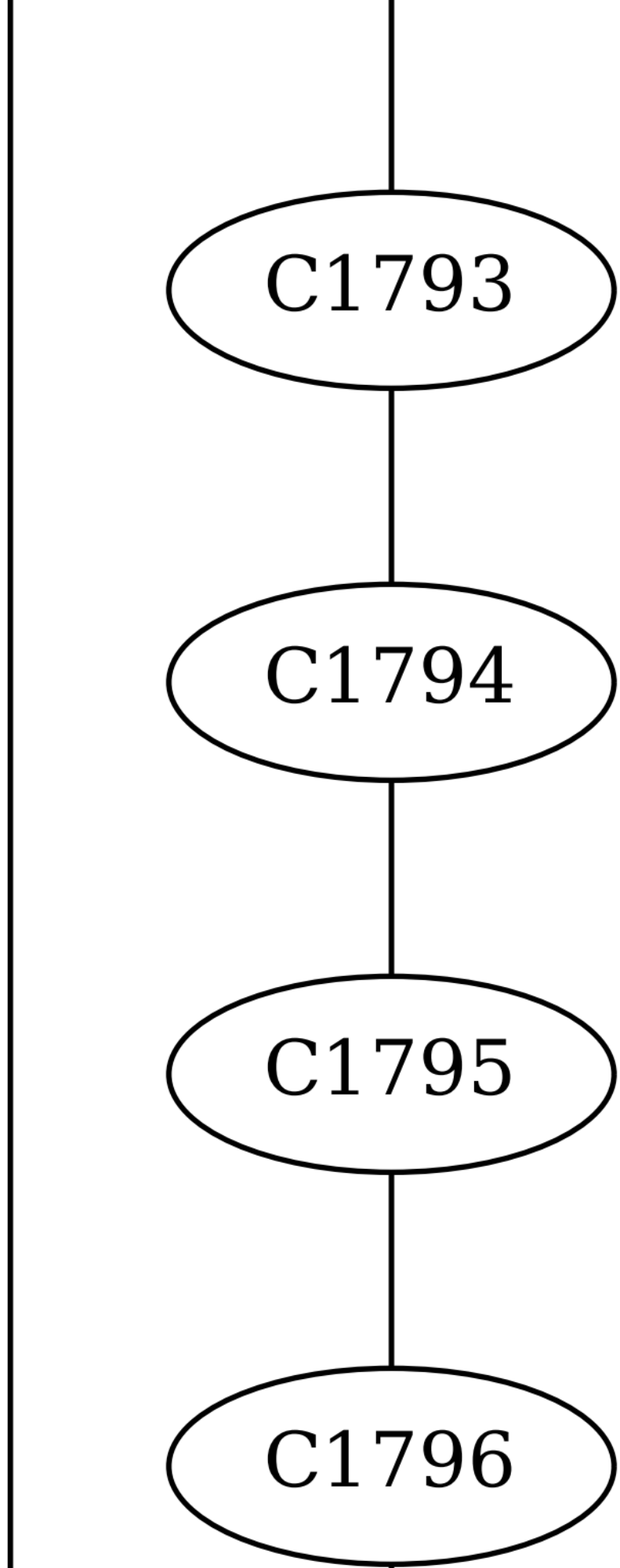
C1793
C1794
C1795
C1796

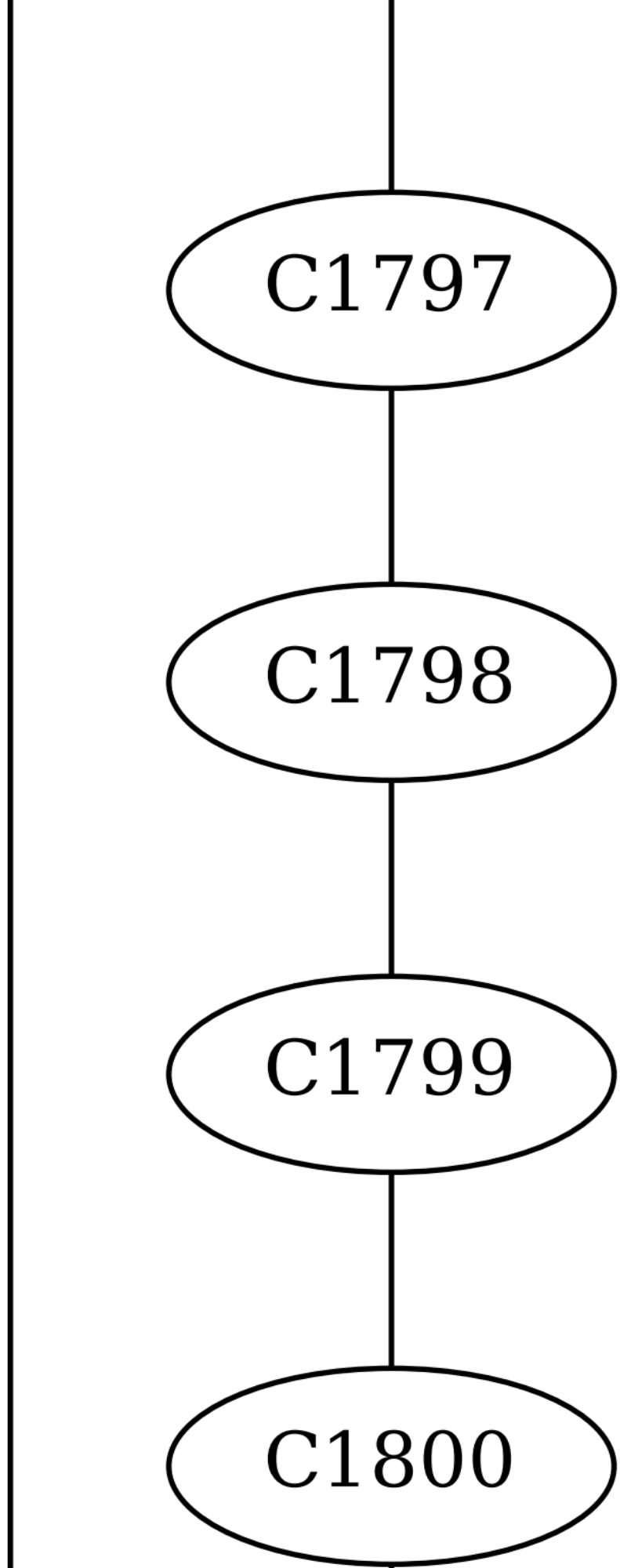
C1797
C1798
C1799
C1800

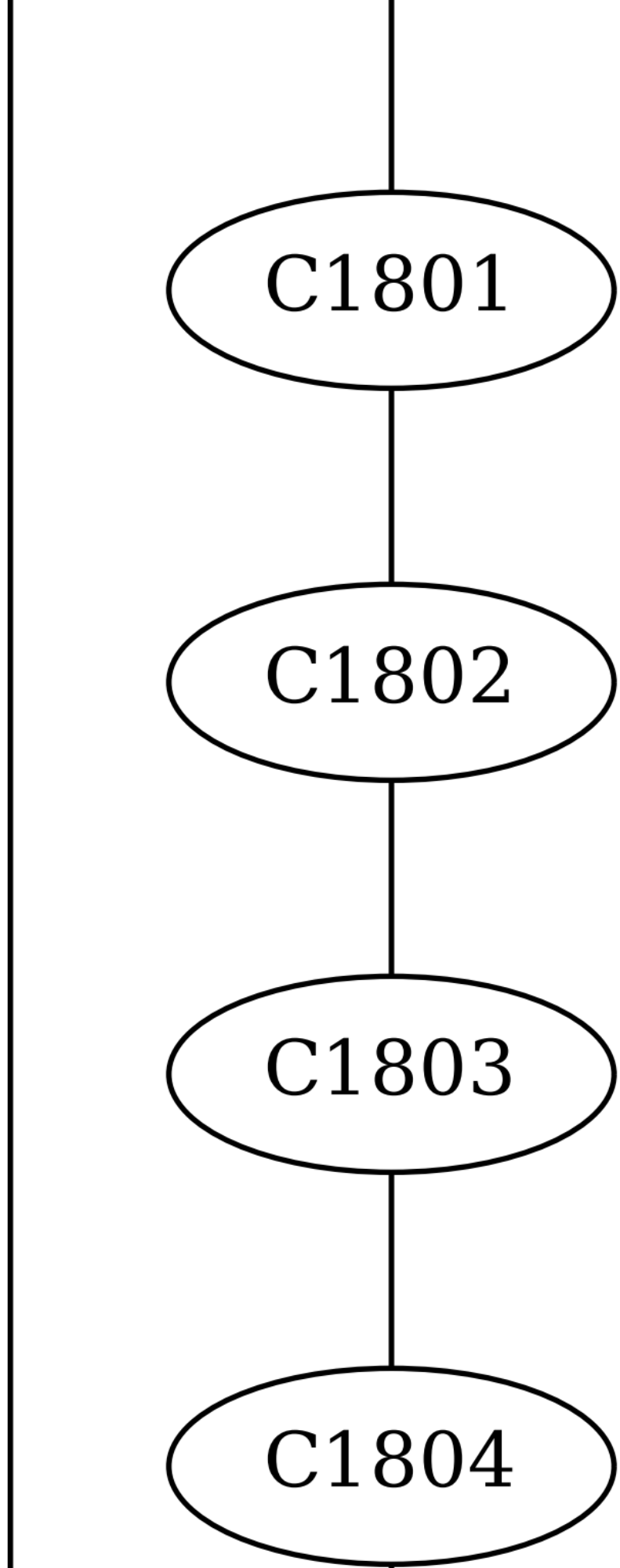
C1801
C1802
C1803
C1804

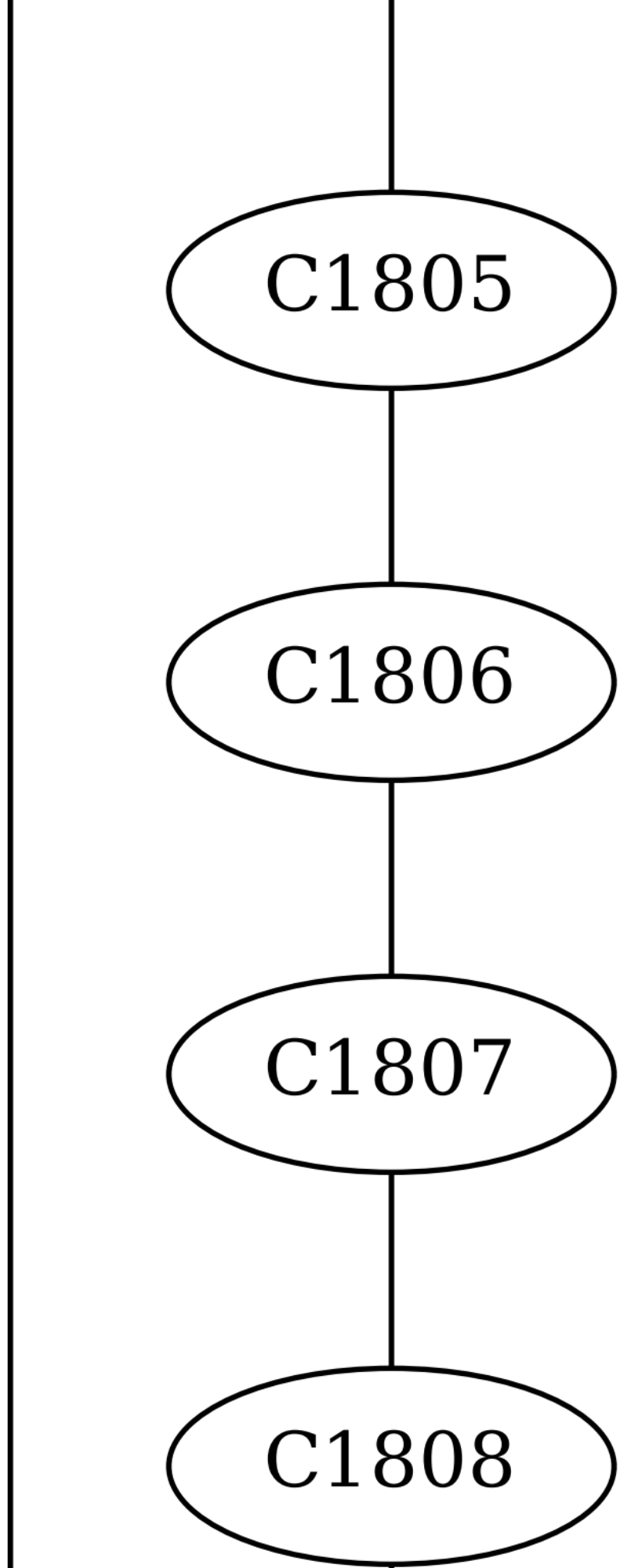
C1805
C1806
C1807
C1808

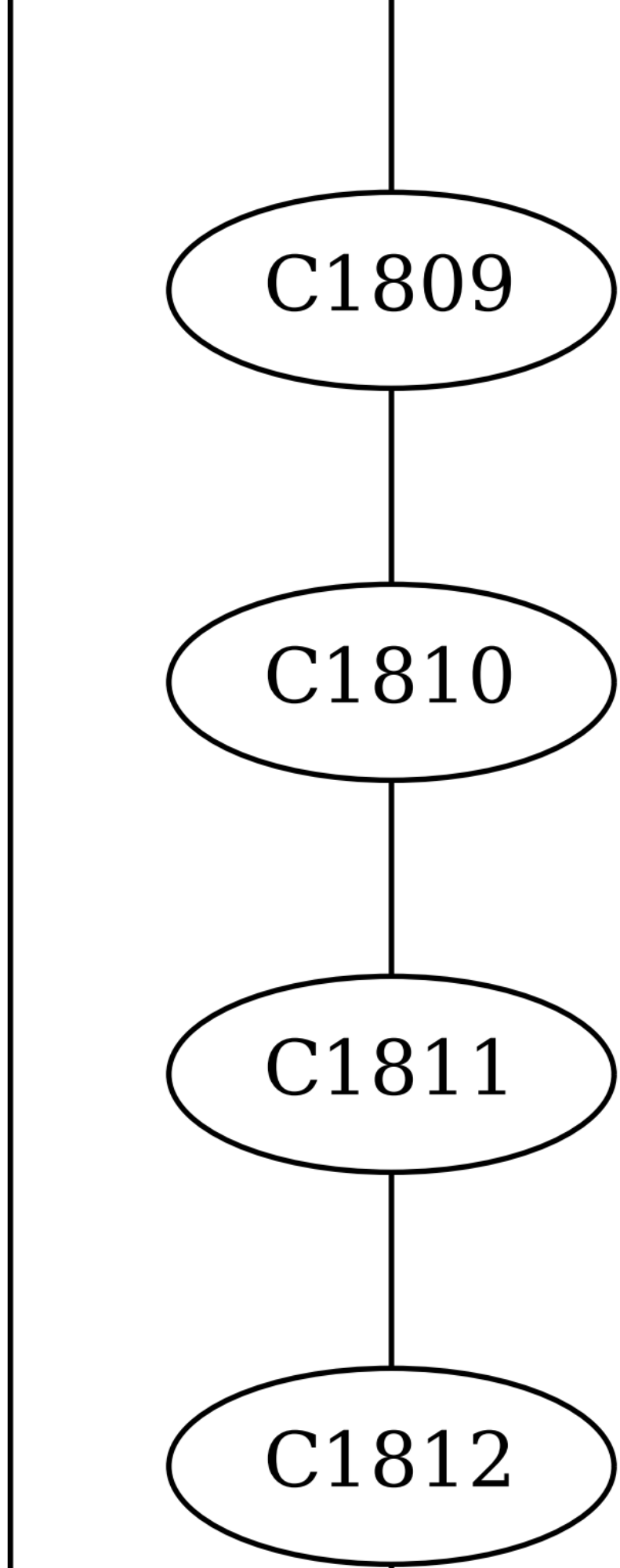
C1809
C1810
C1811
C1812

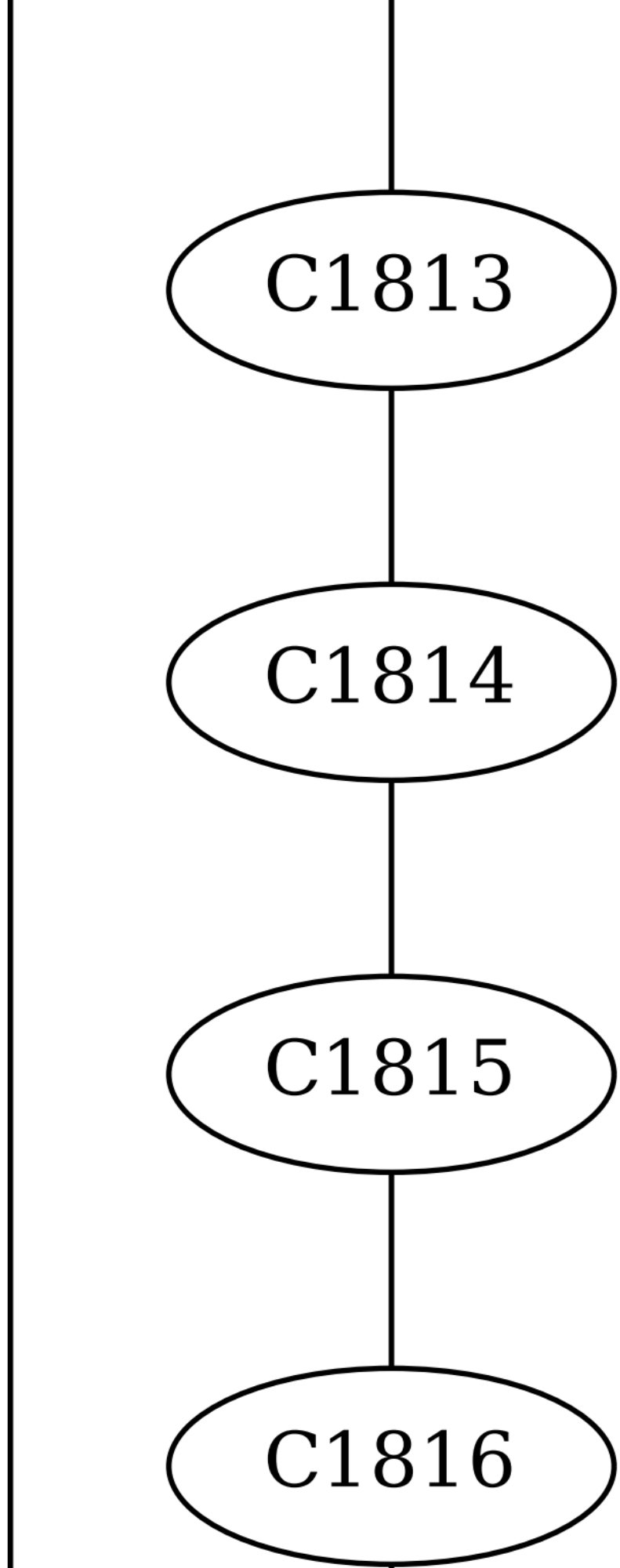
C1813
C1814
C1815
C1816

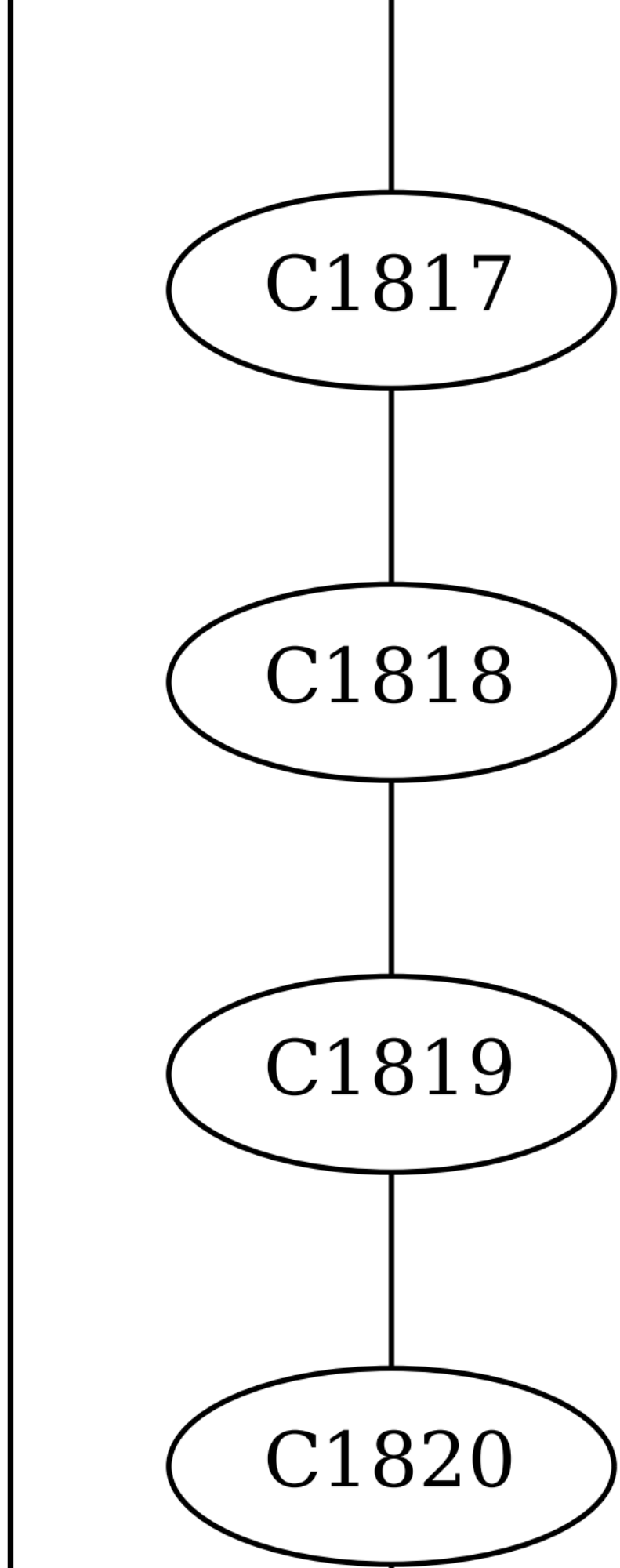
C1817
C1818
C1819
C1820

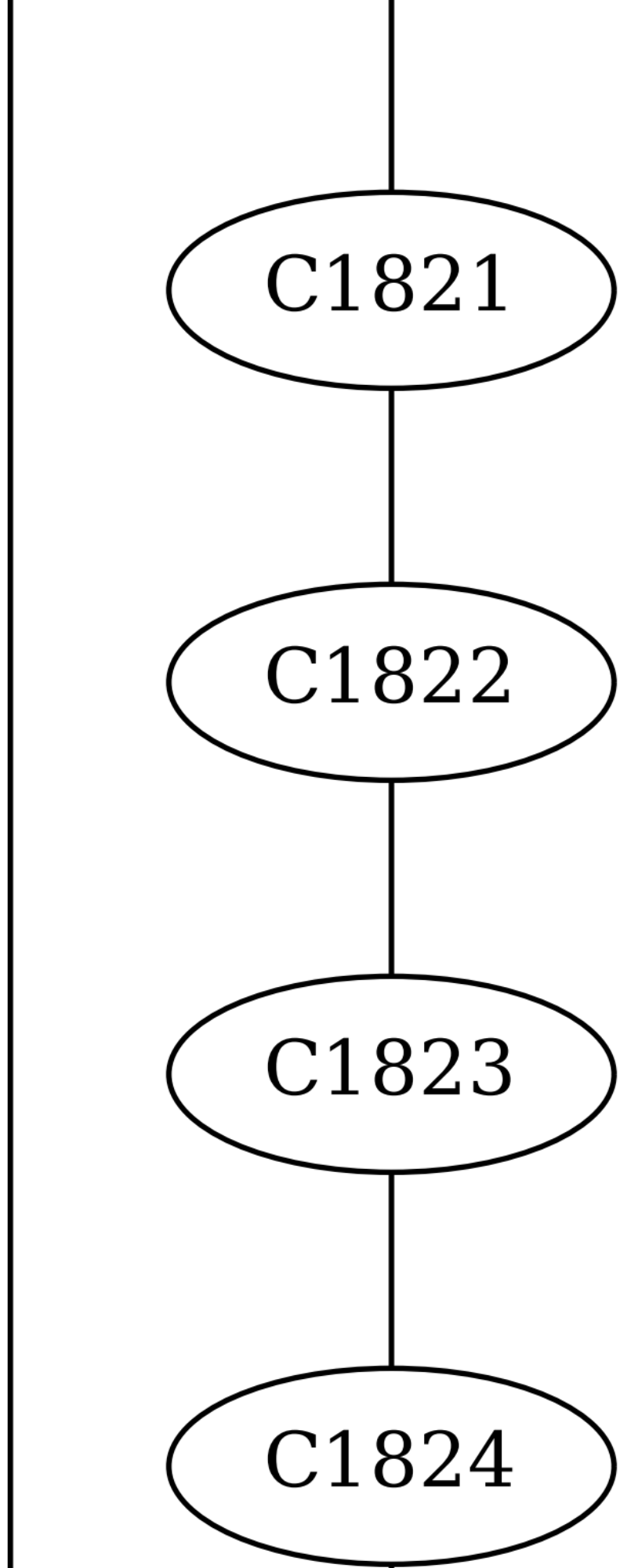
C1821
C1822
C1823
C1824

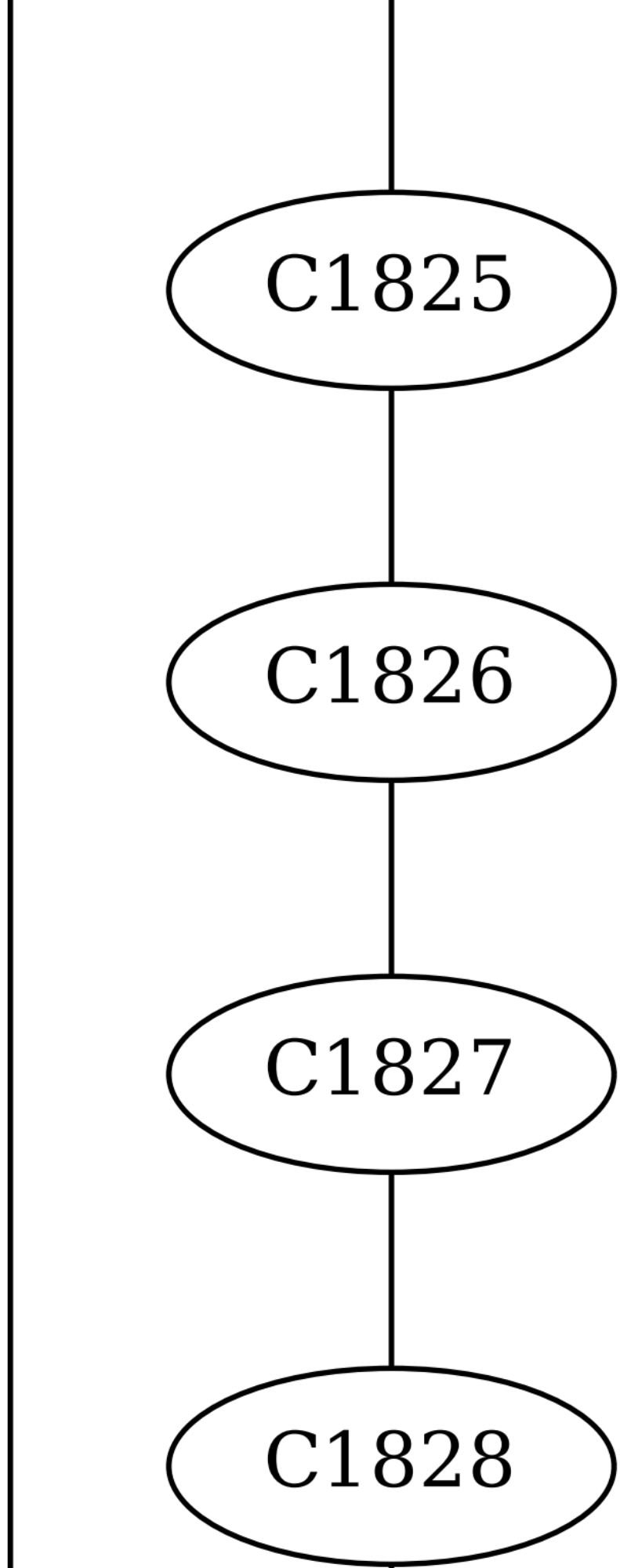
C1825
C1826
C1827
C1828

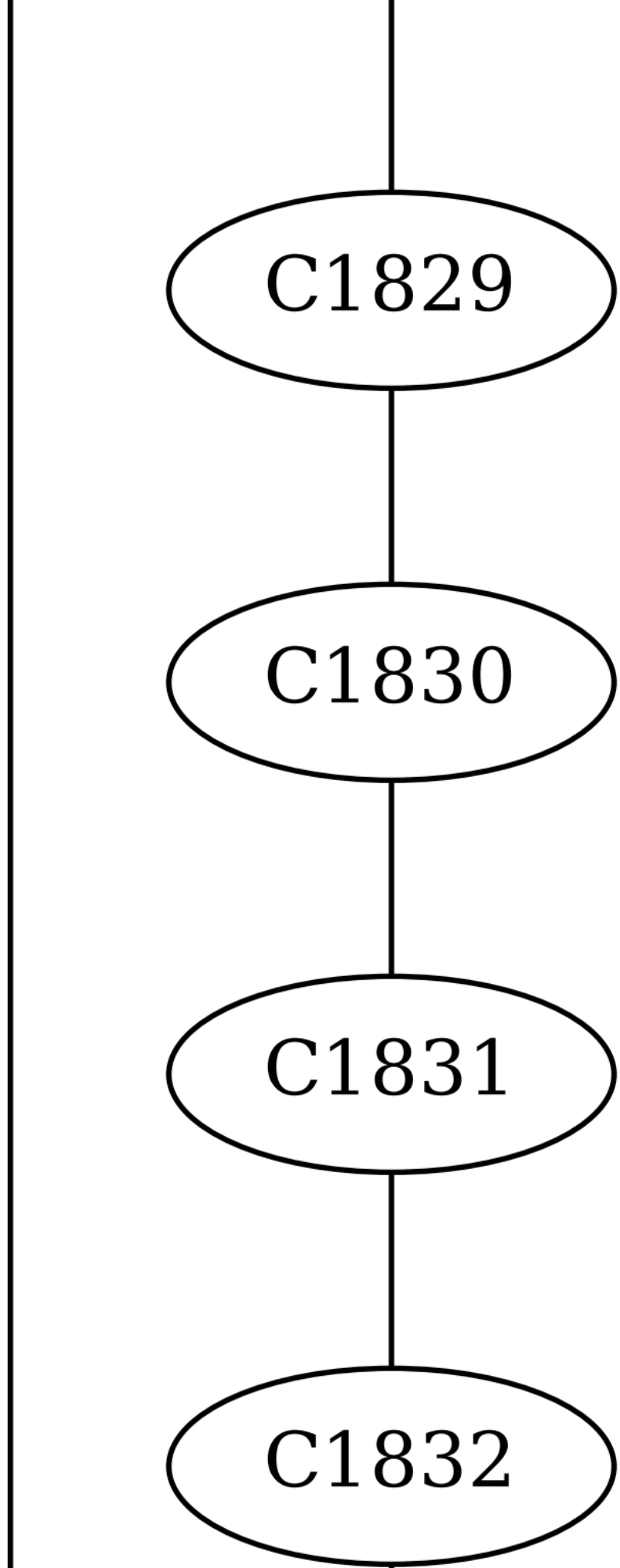
C1829
C1830
C1831
C1832

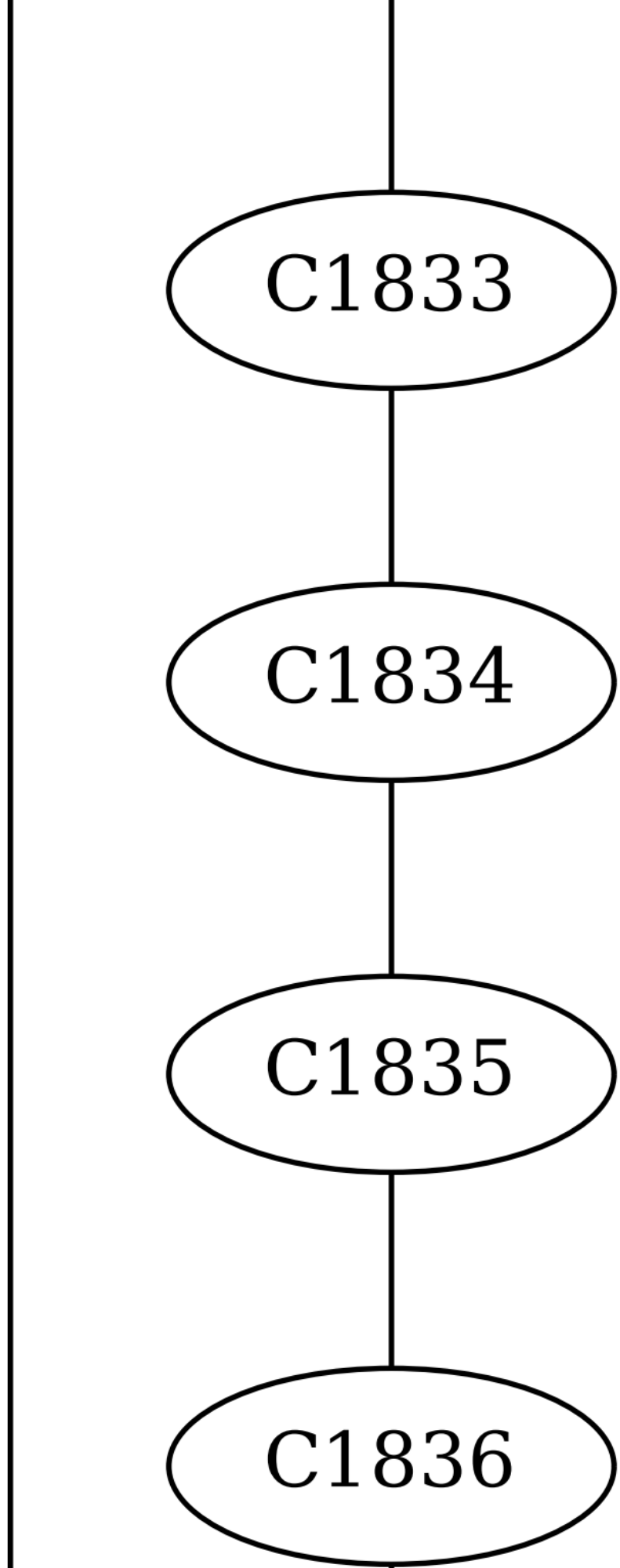
C1833
C1834
C1835
C1836

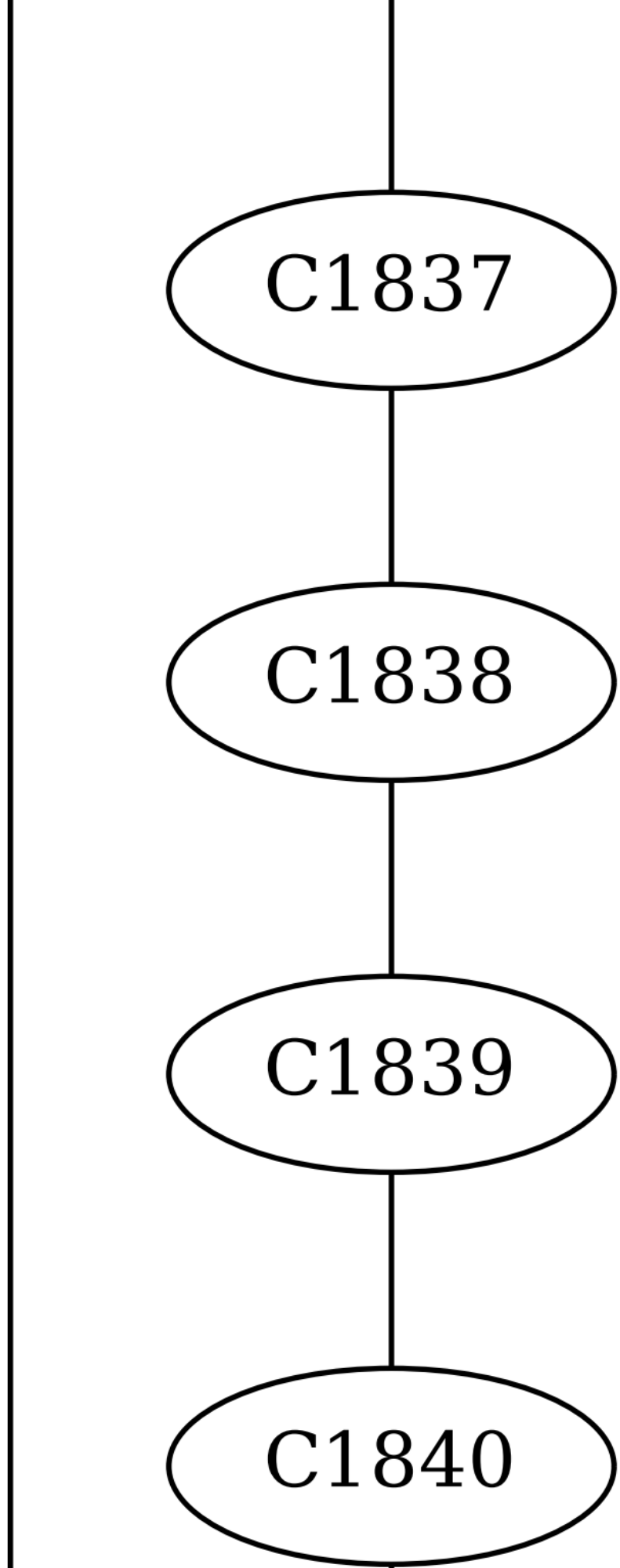
C1837
C1838
C1839
C1840

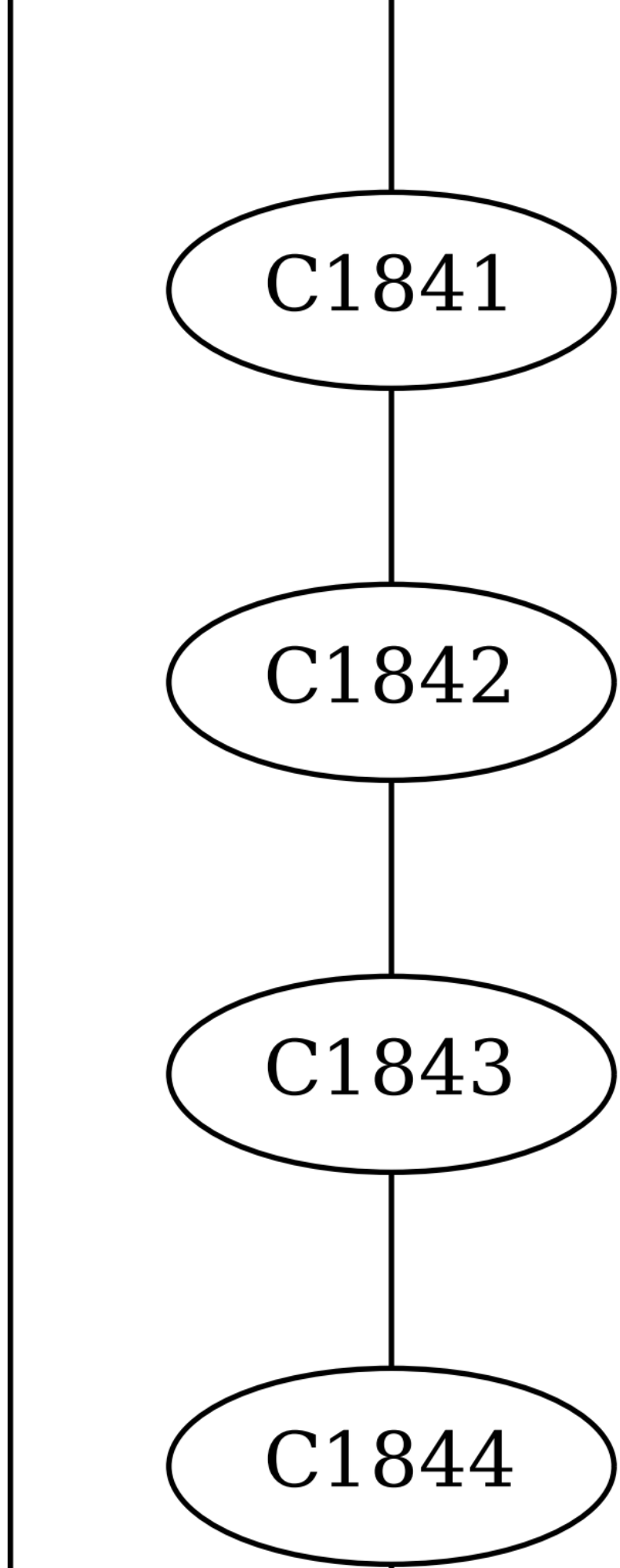
C1841
C1842
C1843
C1844

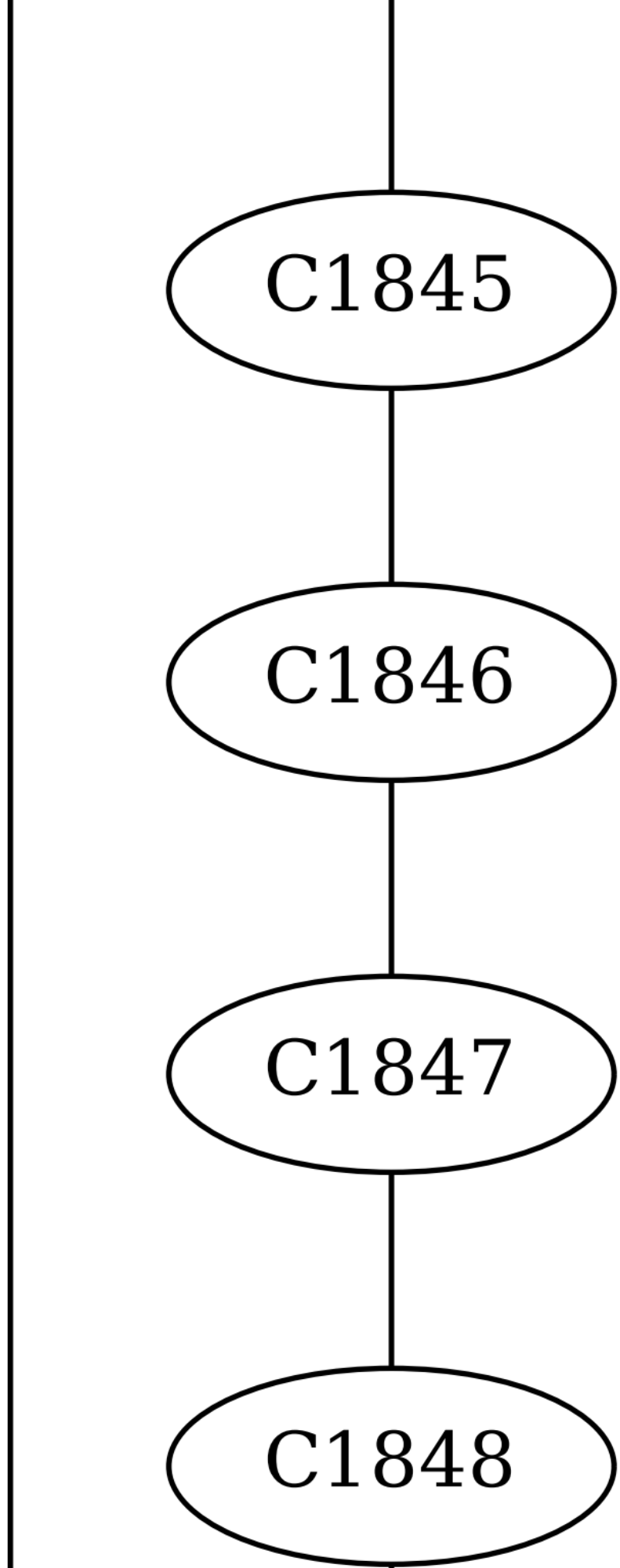
C1845
C1846
C1847
C1848

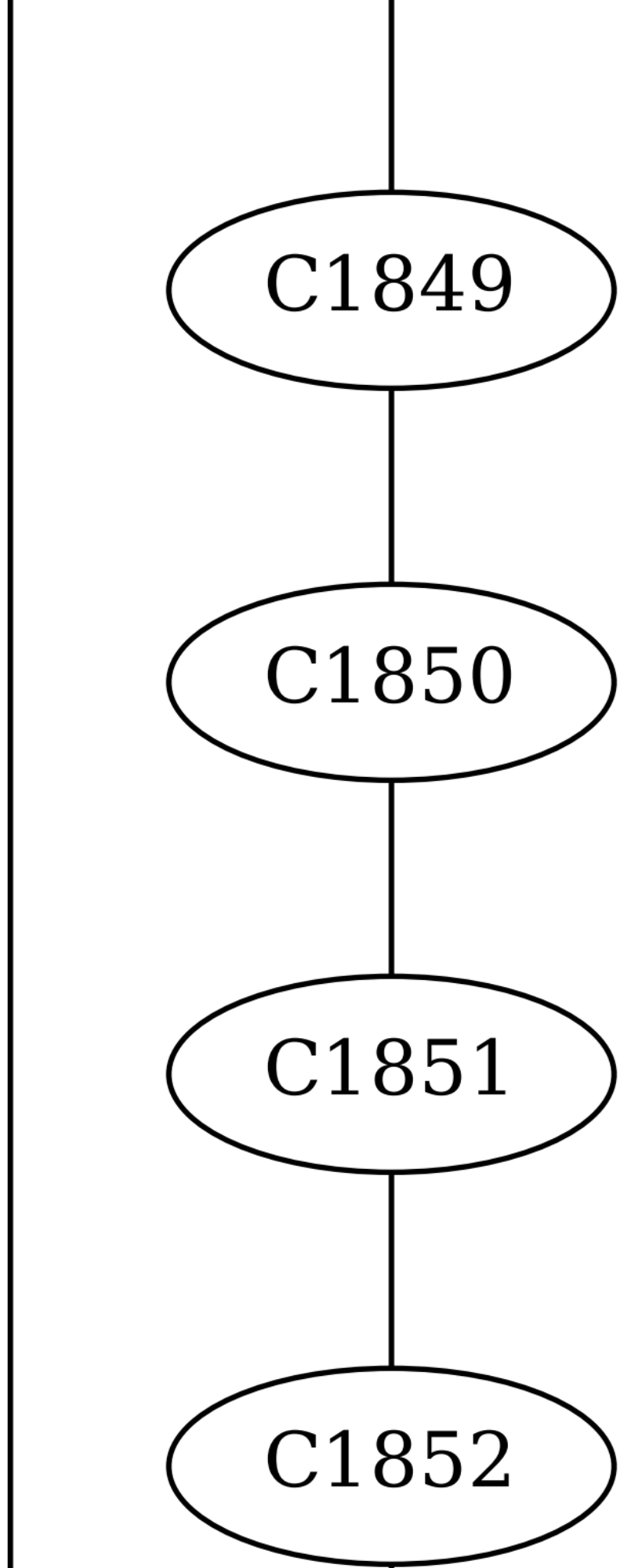
C1849
C1850
C1851
C1852

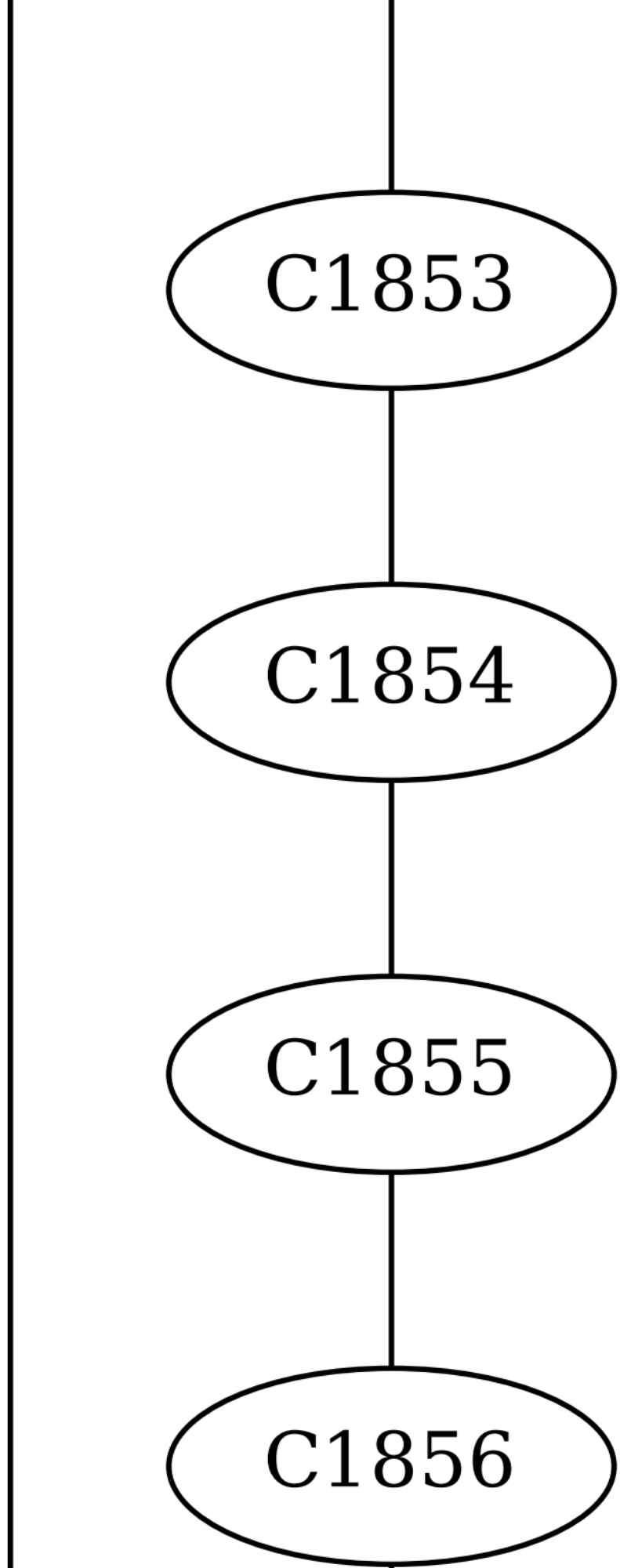
C1853
C1854
C1855
C1856

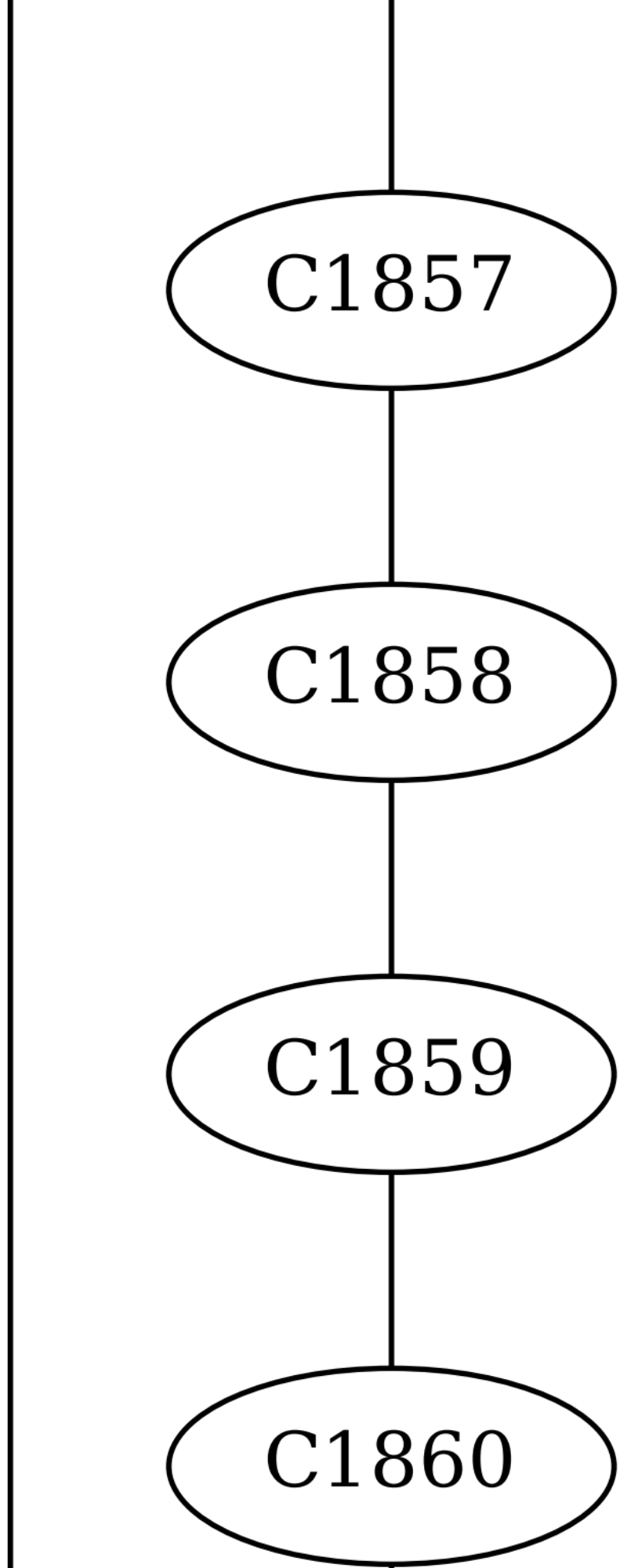
C1857
C1858
C1859
C1860

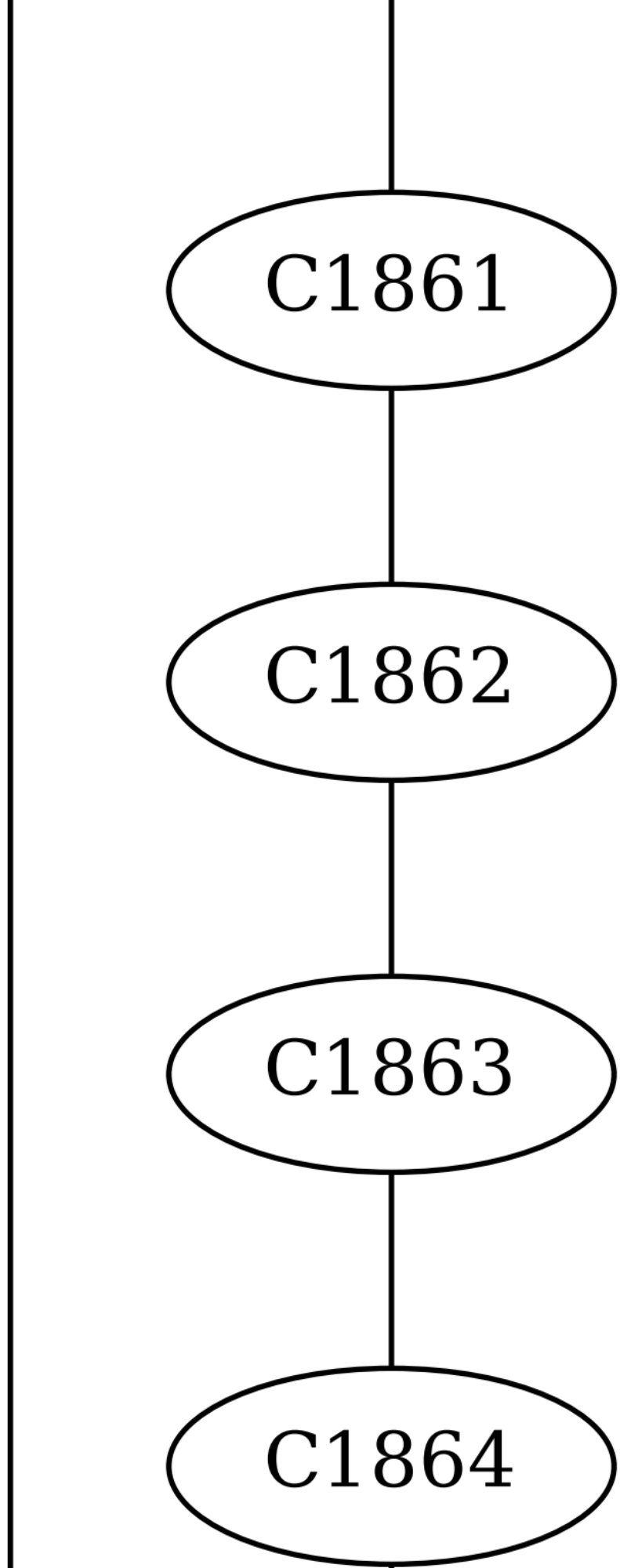
C1861
C1862
C1863
C1864

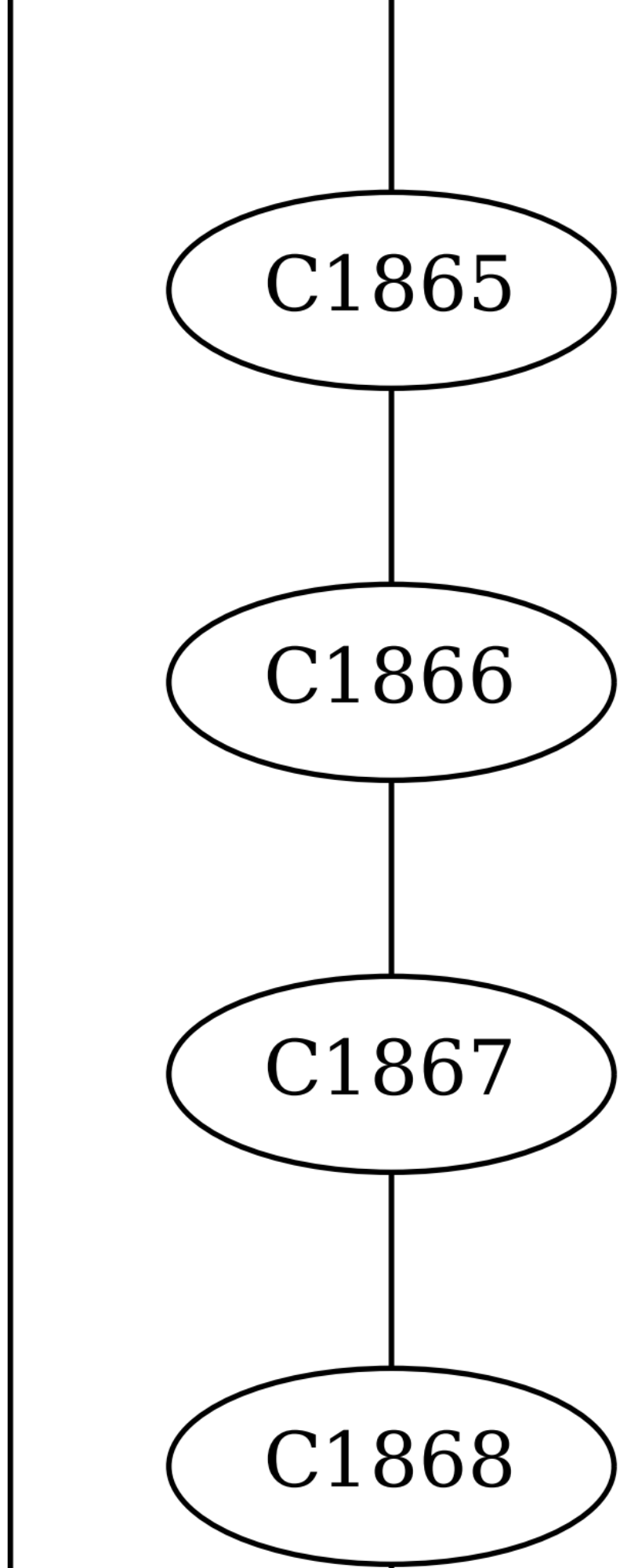
C1865
C1866
C1867
C1868

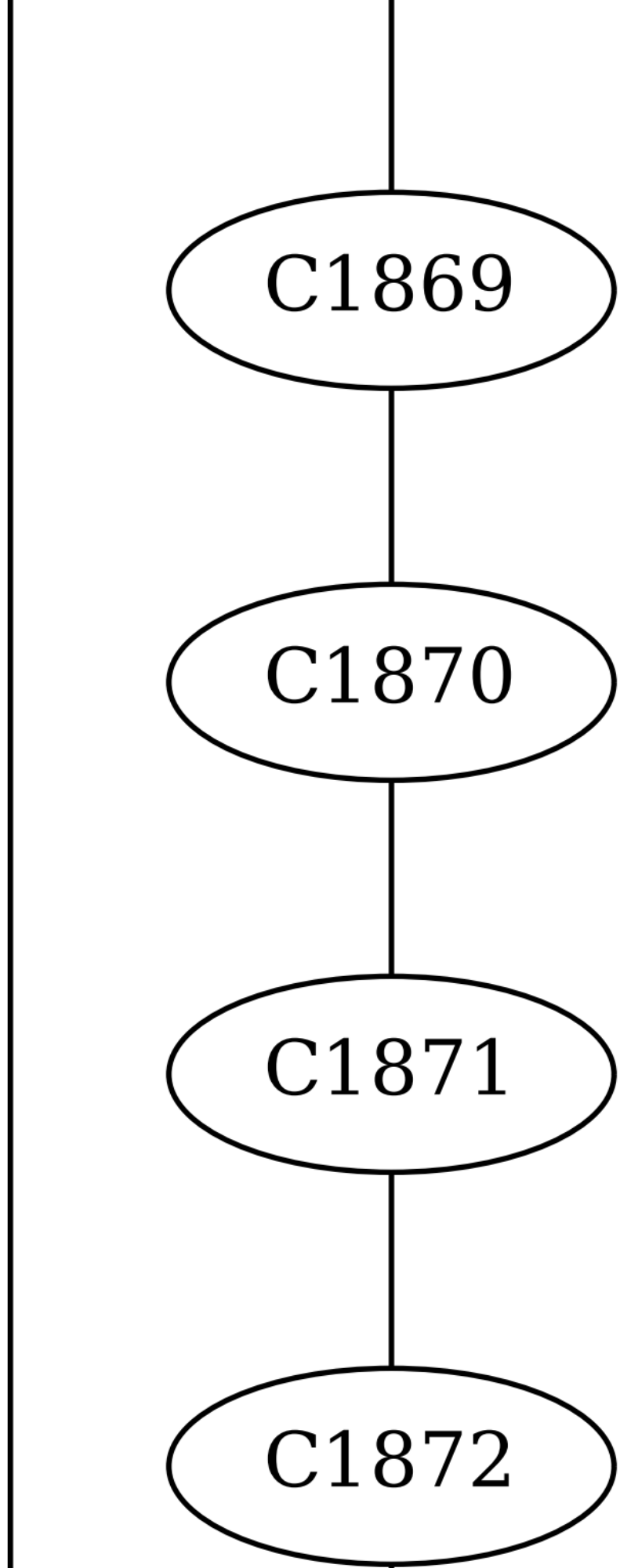
C1869
C1870
C1871
C1872

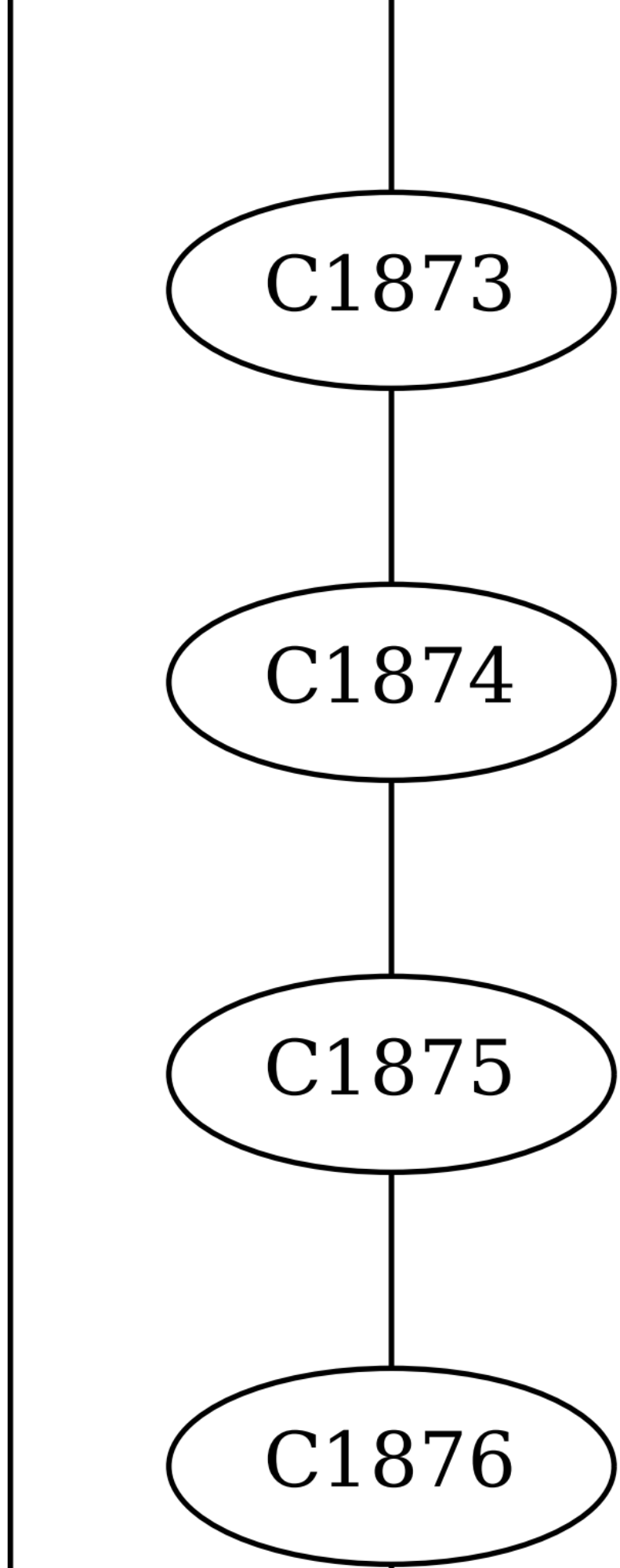
C1873
C1874
C1875
C1876

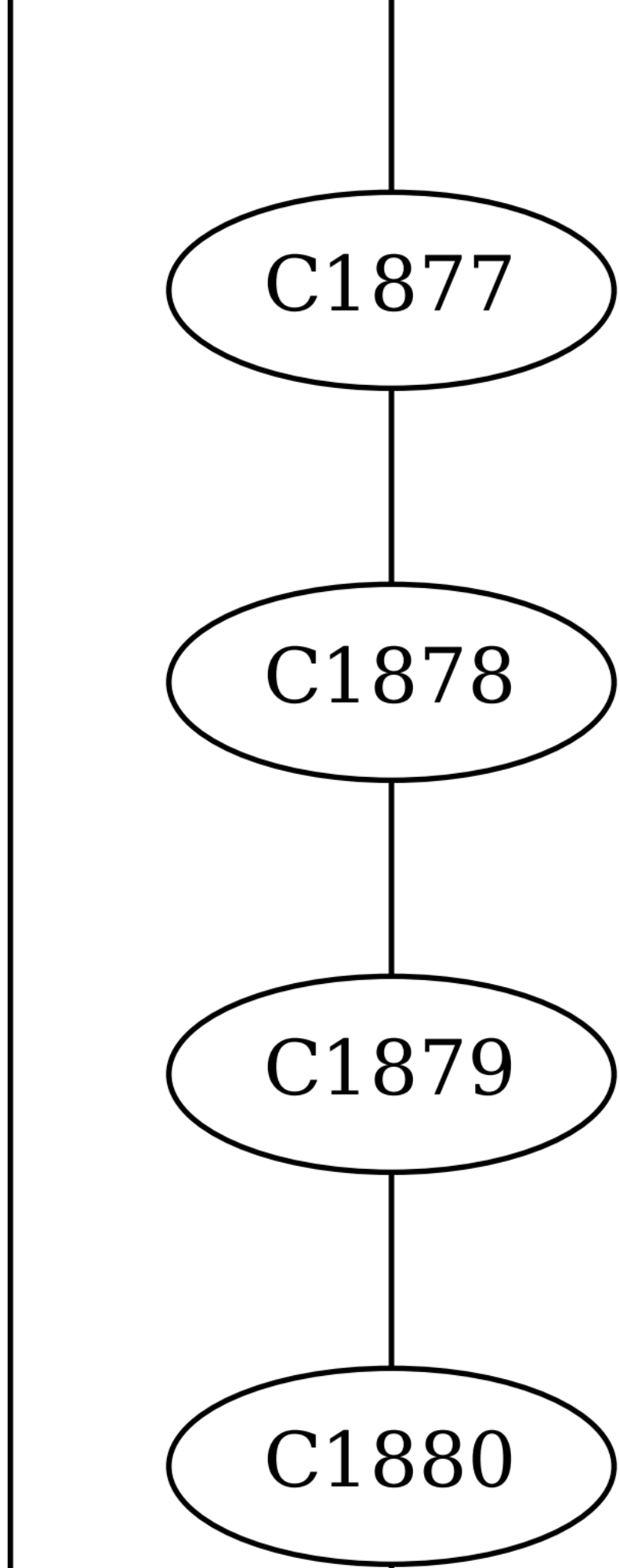
C1877
C1878
C1879
C1880

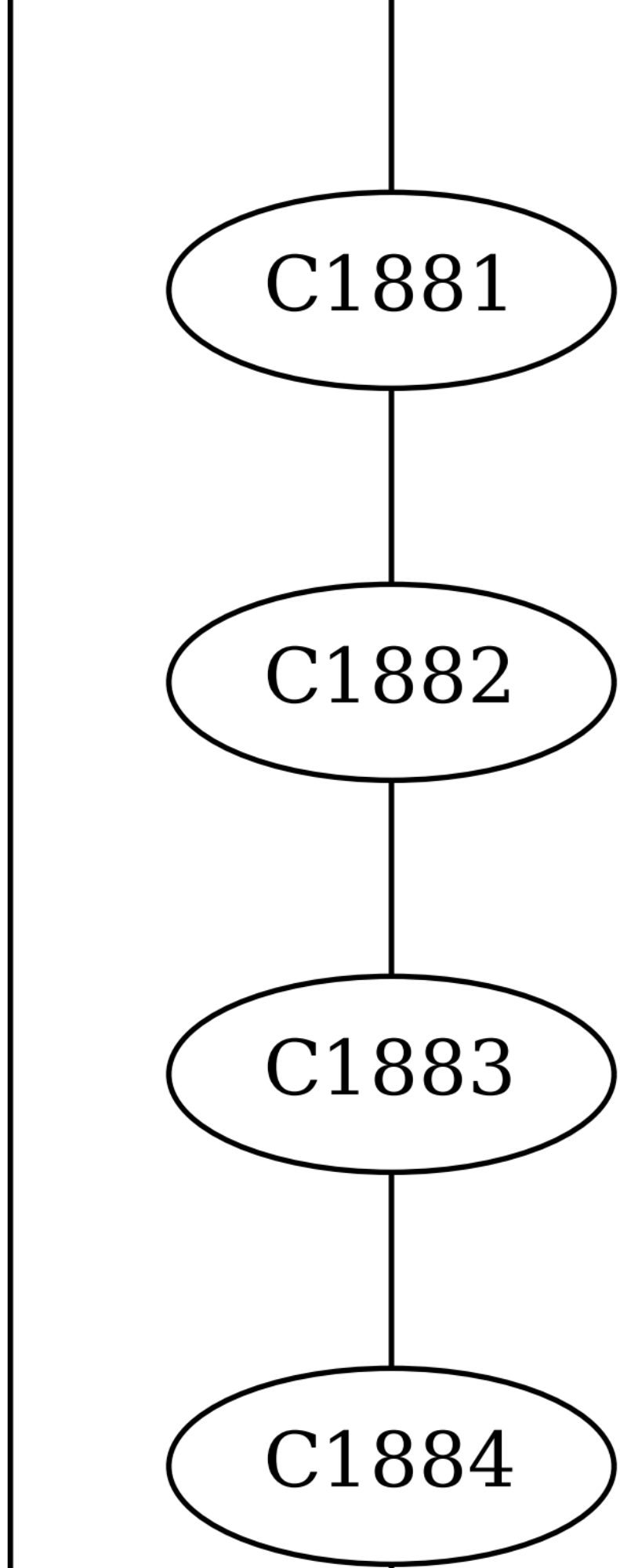
C1881
C1882
C1883
C1884

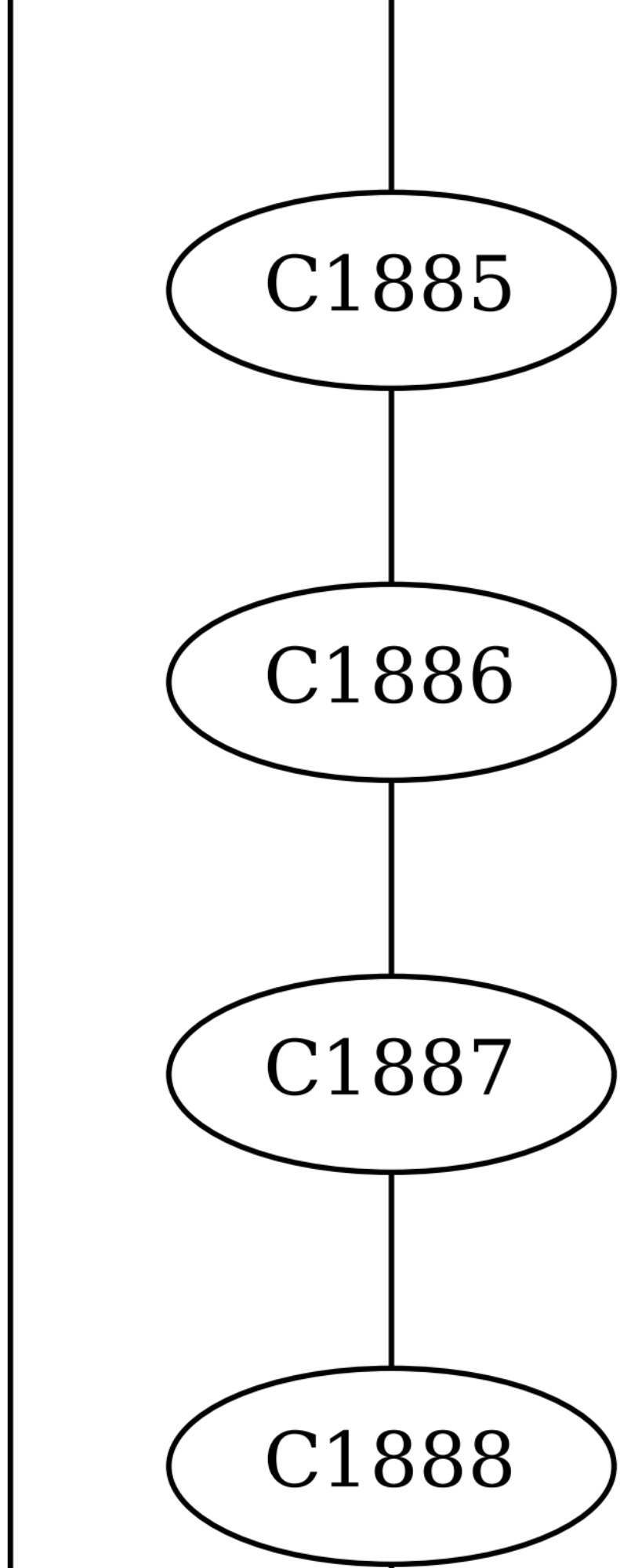
C1885
C1886
C1887
C1888

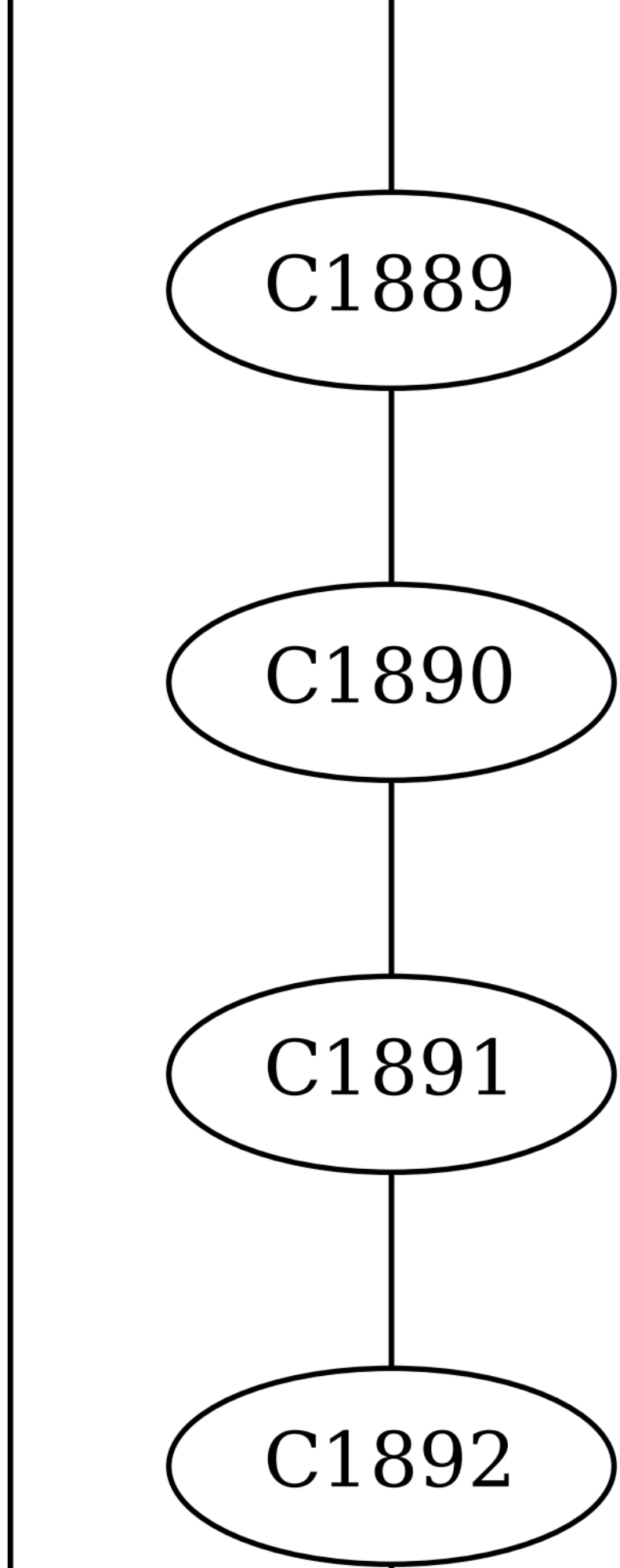
C1889
C1890
C1891
C1892

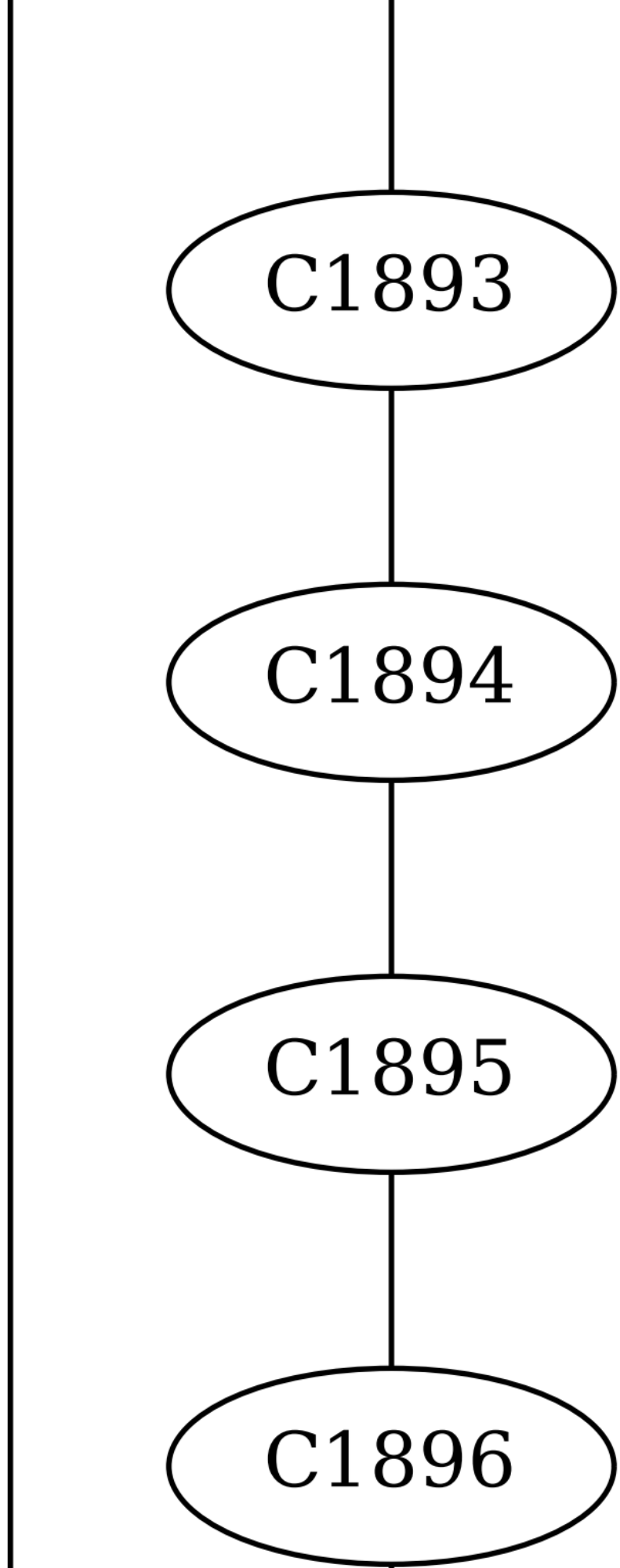
C1893
C1894
C1895
C1896

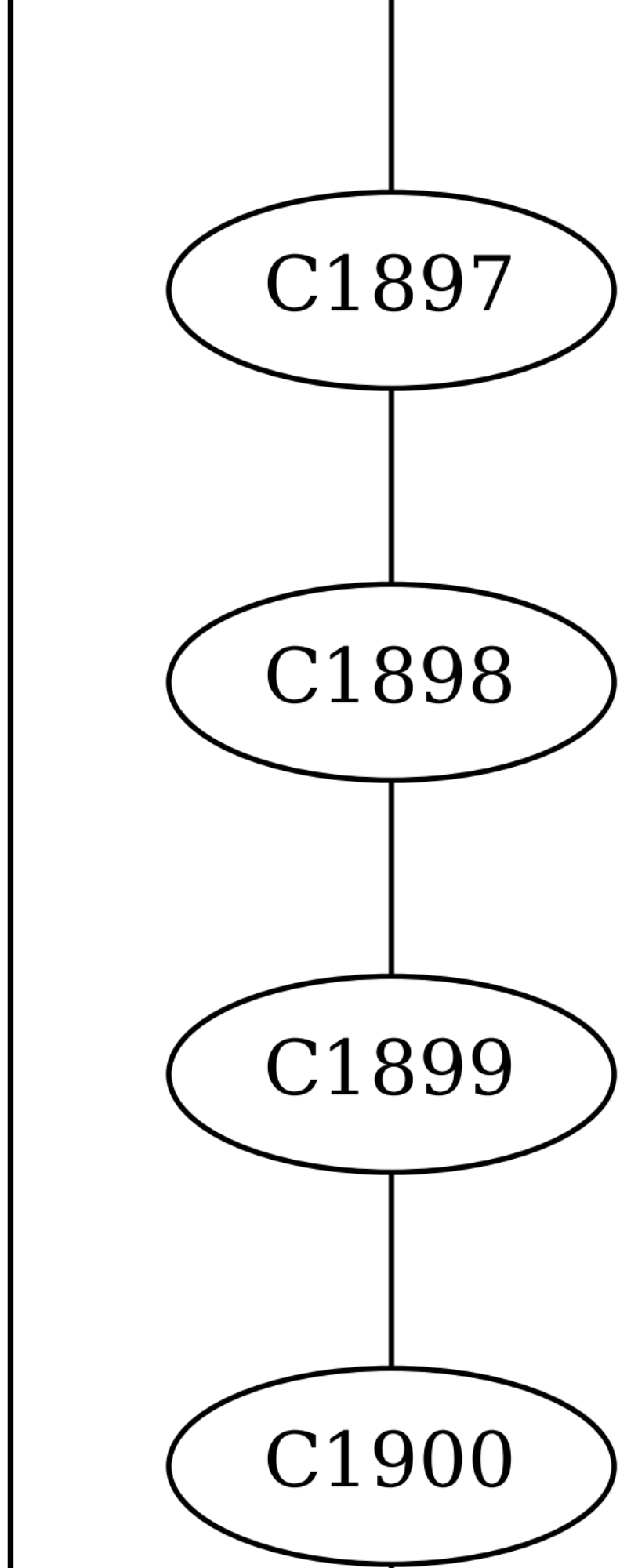
C1897
C1898
C1899
C1900

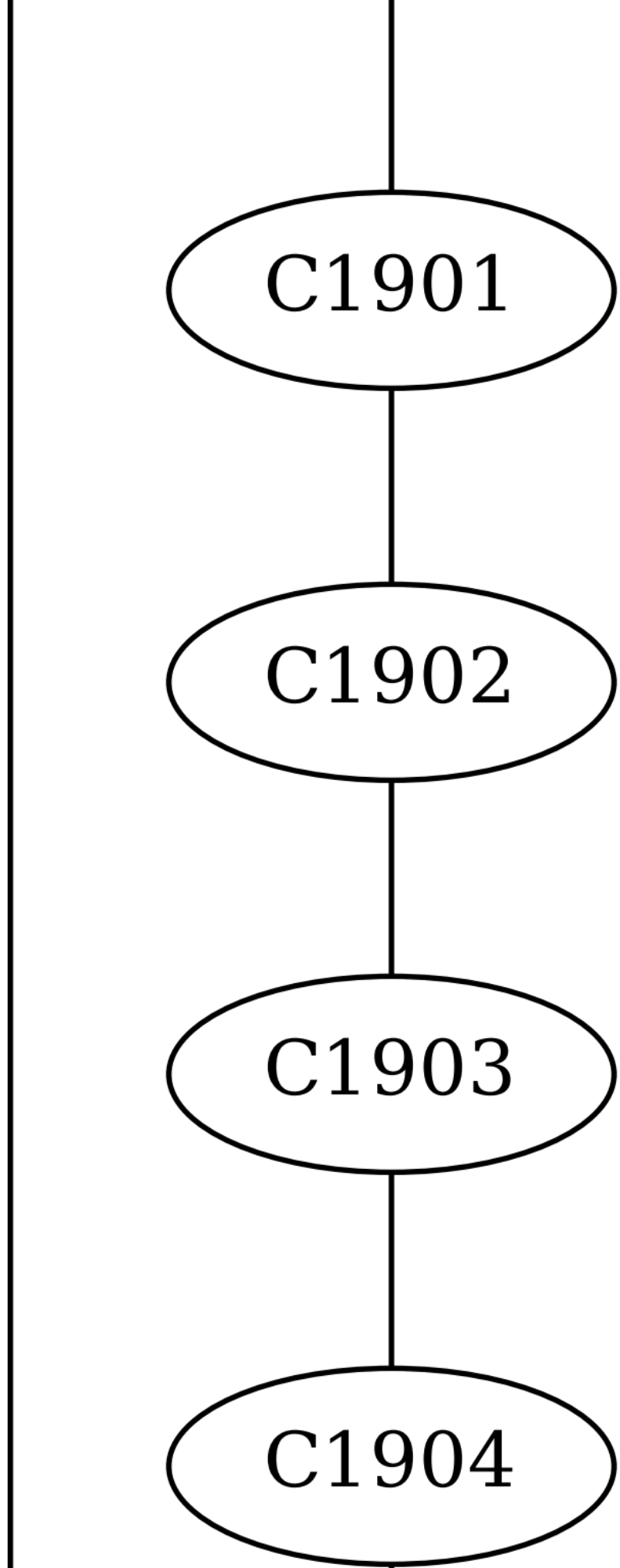
C1901
C1902
C1903
C1904

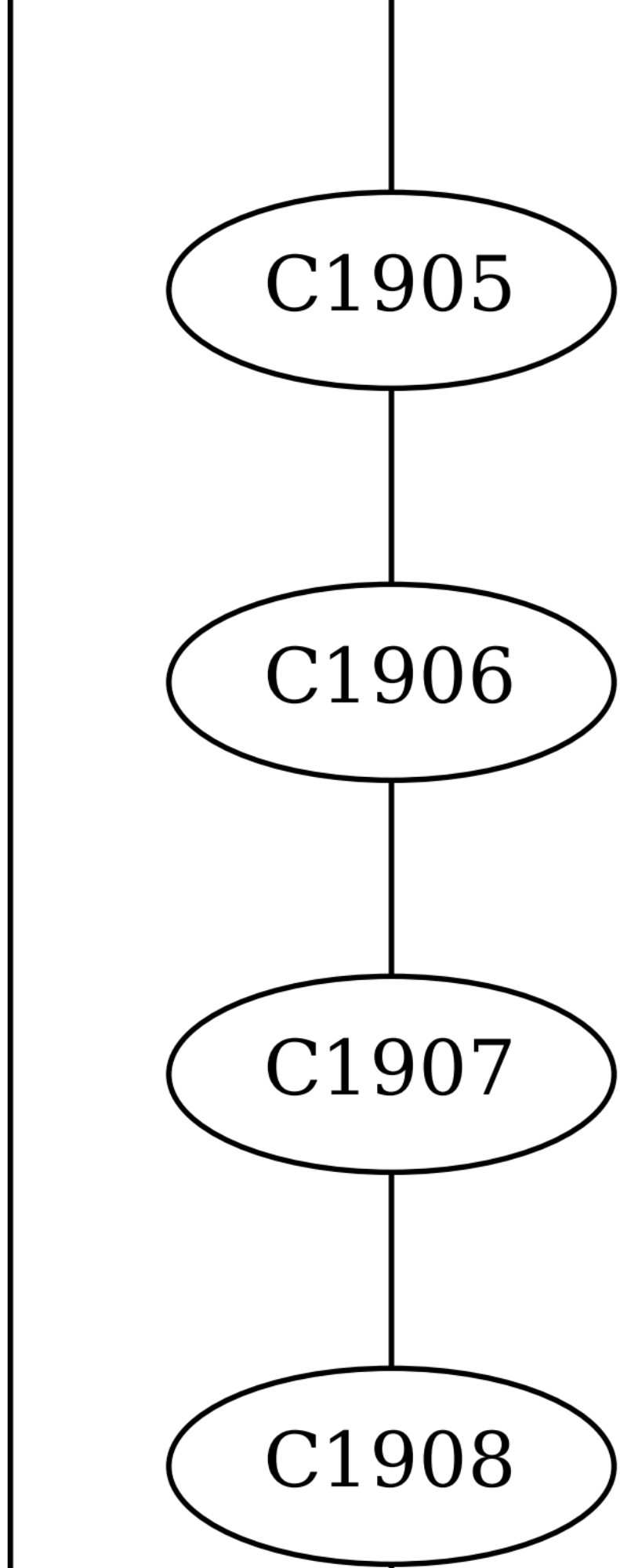
C1905
C1906
C1907
C1908

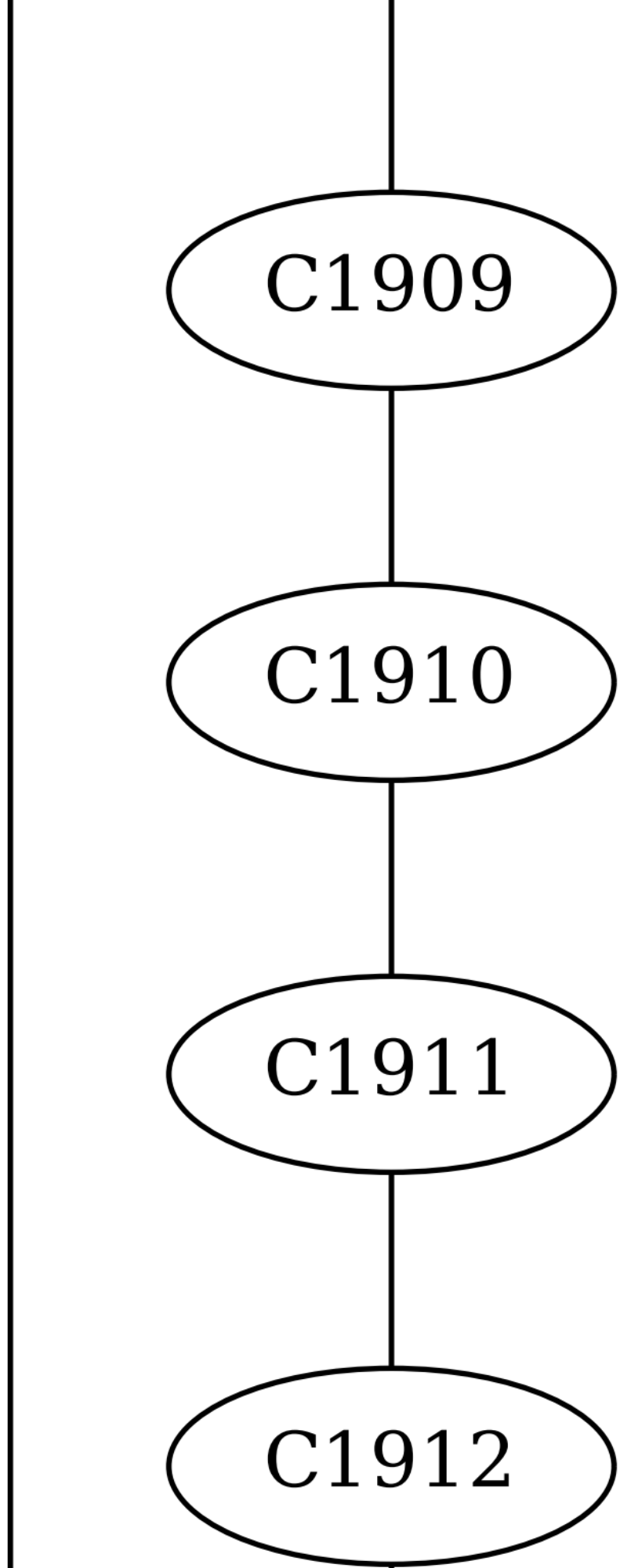
C1909
C1910
C1911
C1912

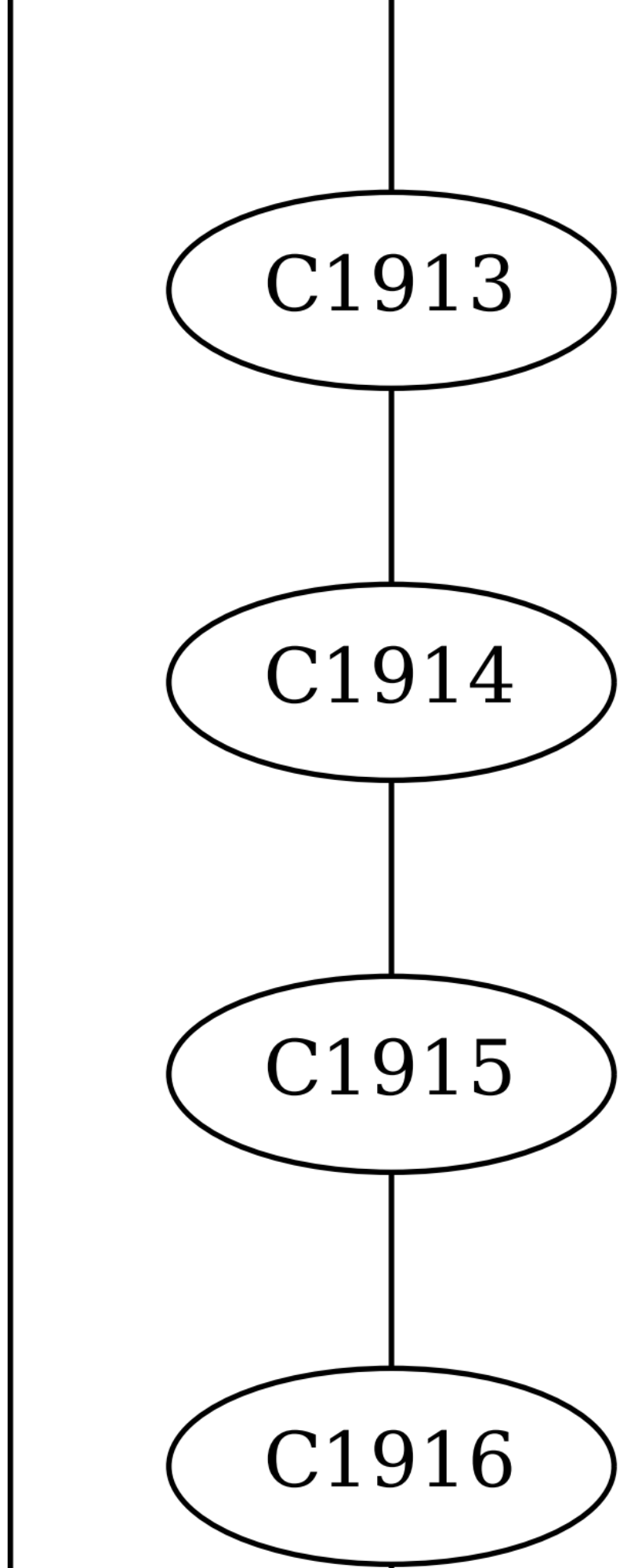
C1913
C1914
C1915
C1916

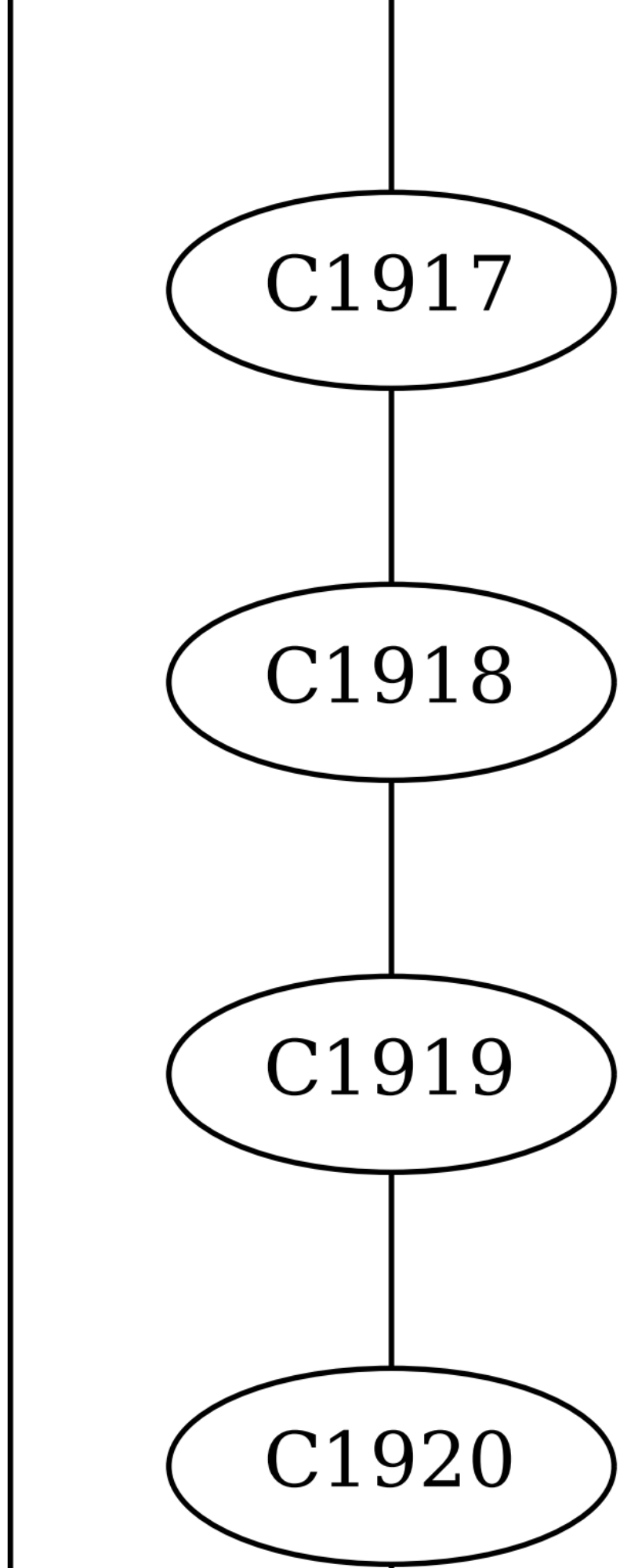
C1917
C1918
C1919
C1920

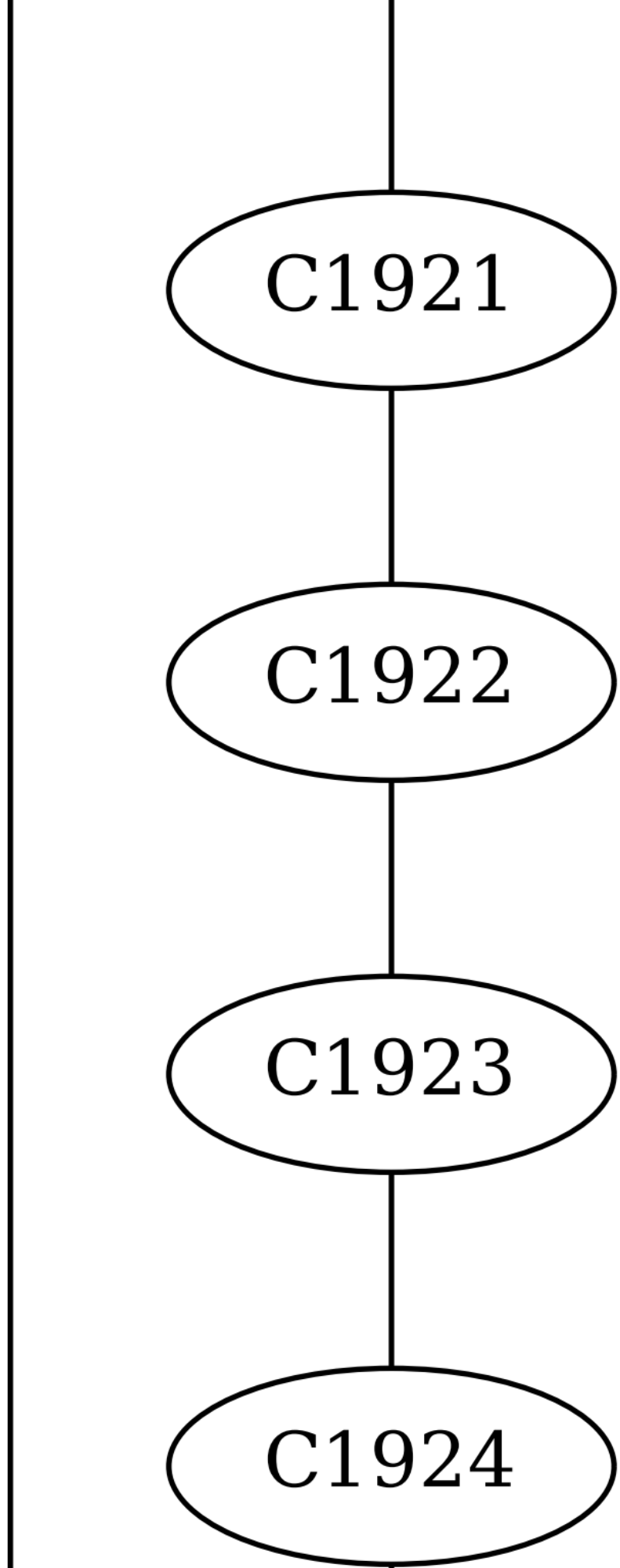
C1921
C1922
C1923
C1924

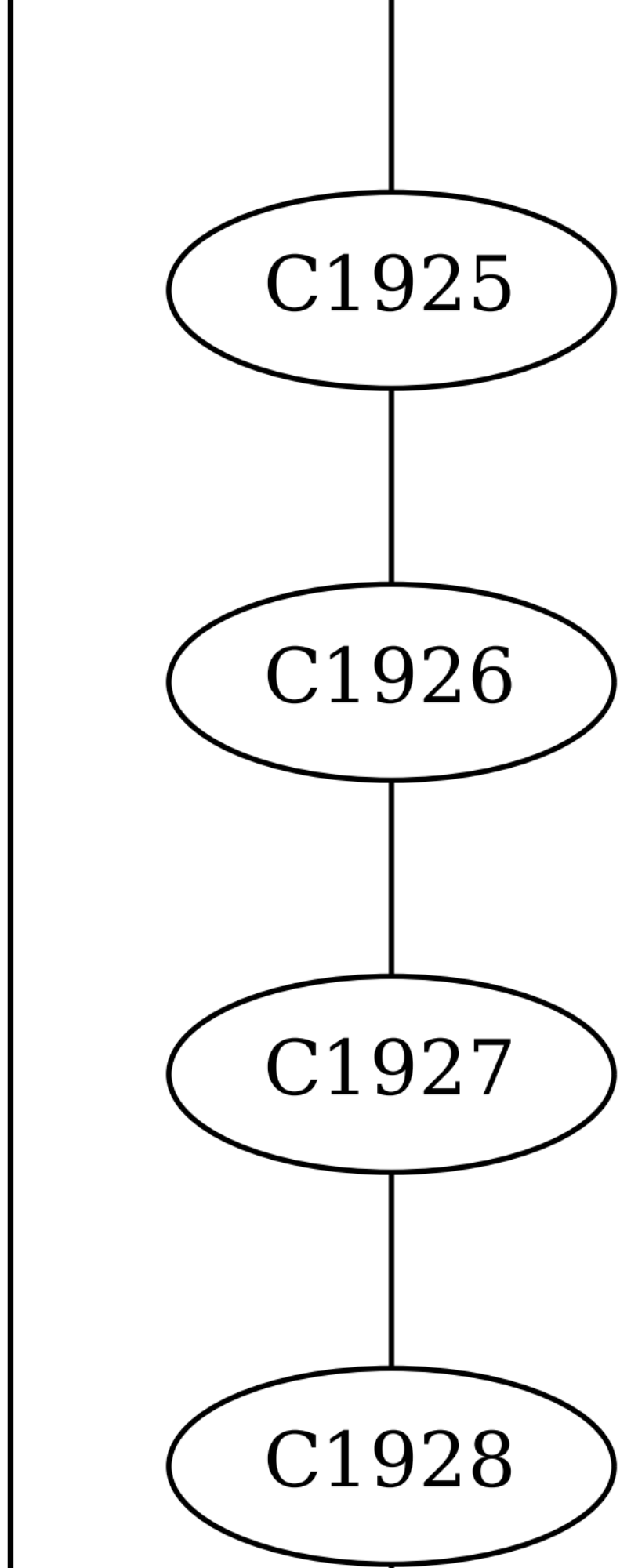
C1925
C1926
C1927
C1928

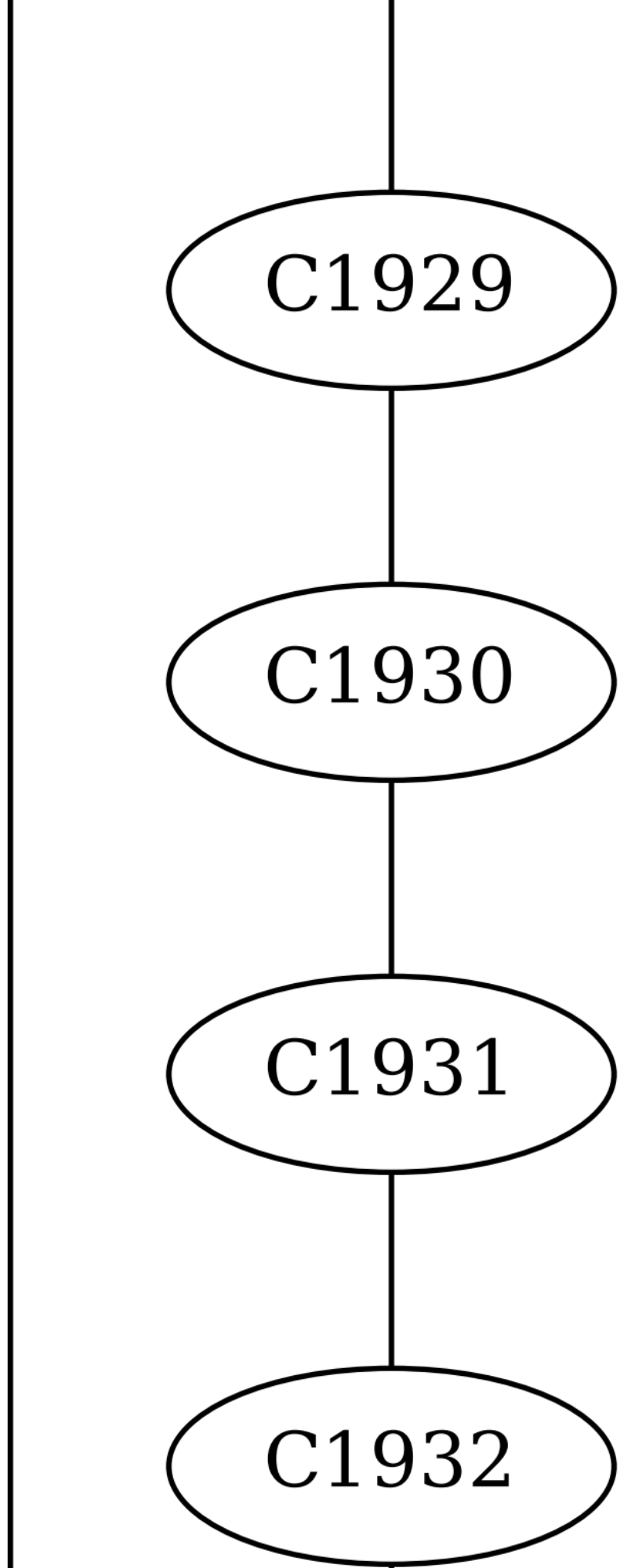
C1929
C1930
C1931
C1932

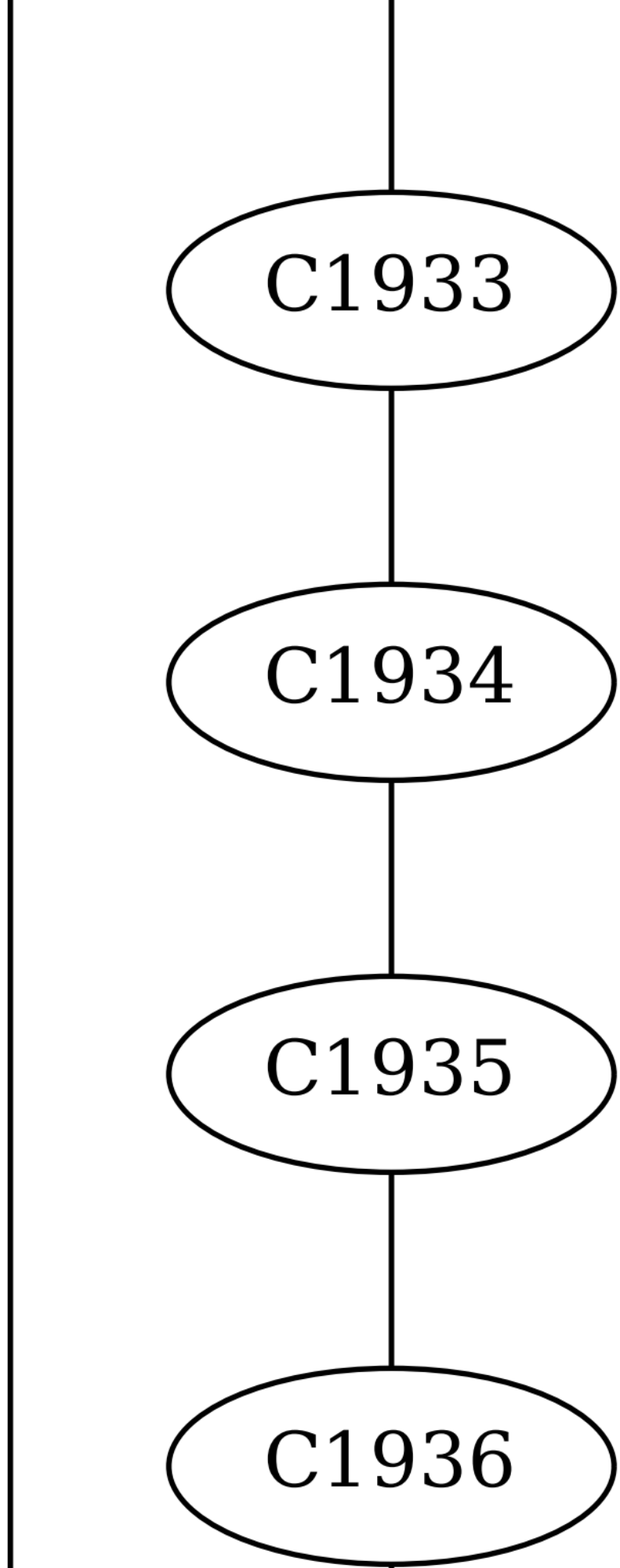
C1933
C1934
C1935
C1936

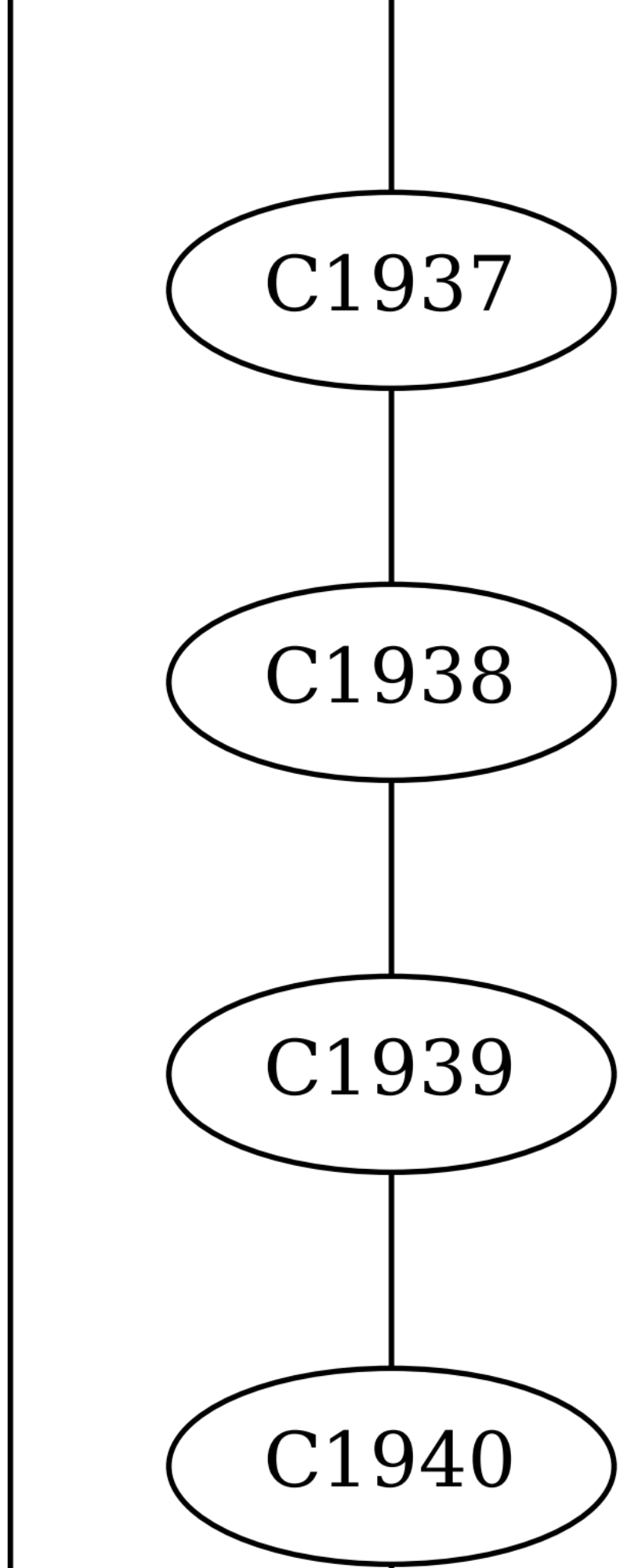
C1937
C1938
C1939
C1940

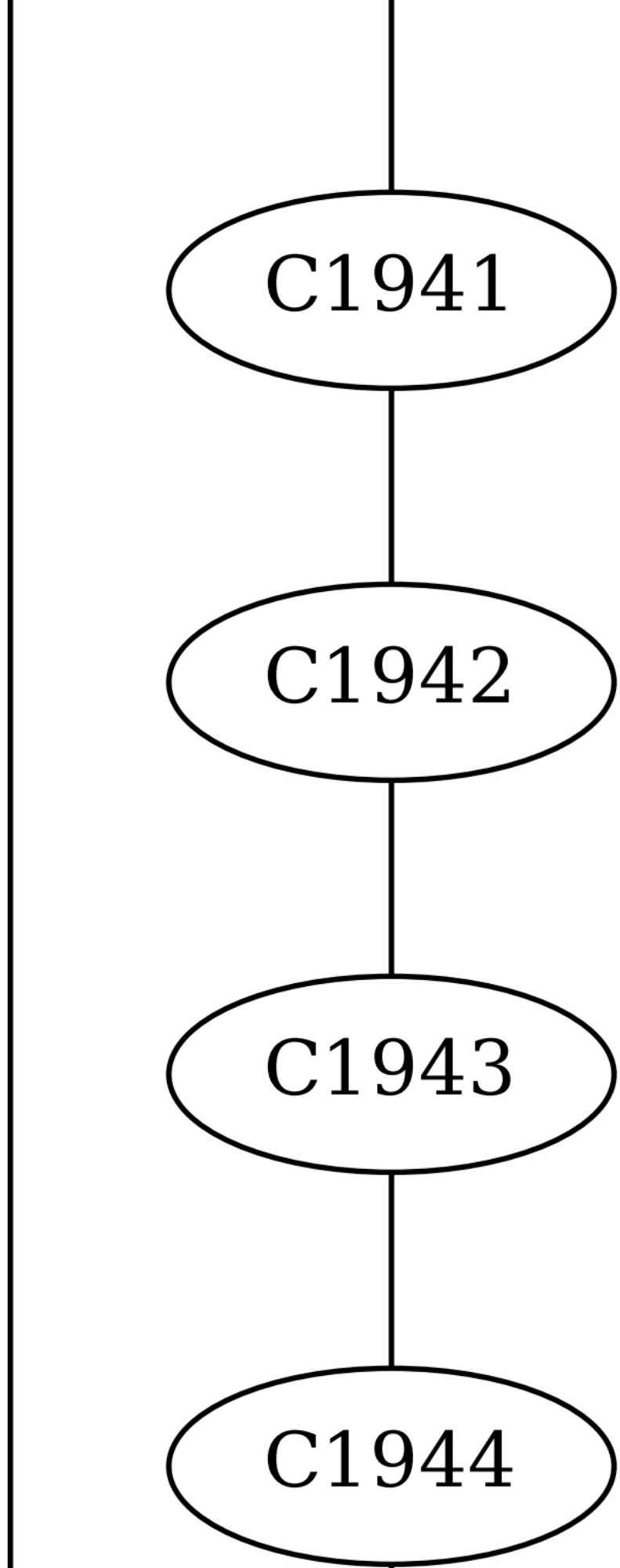
C1941
C1942
C1943
C1944

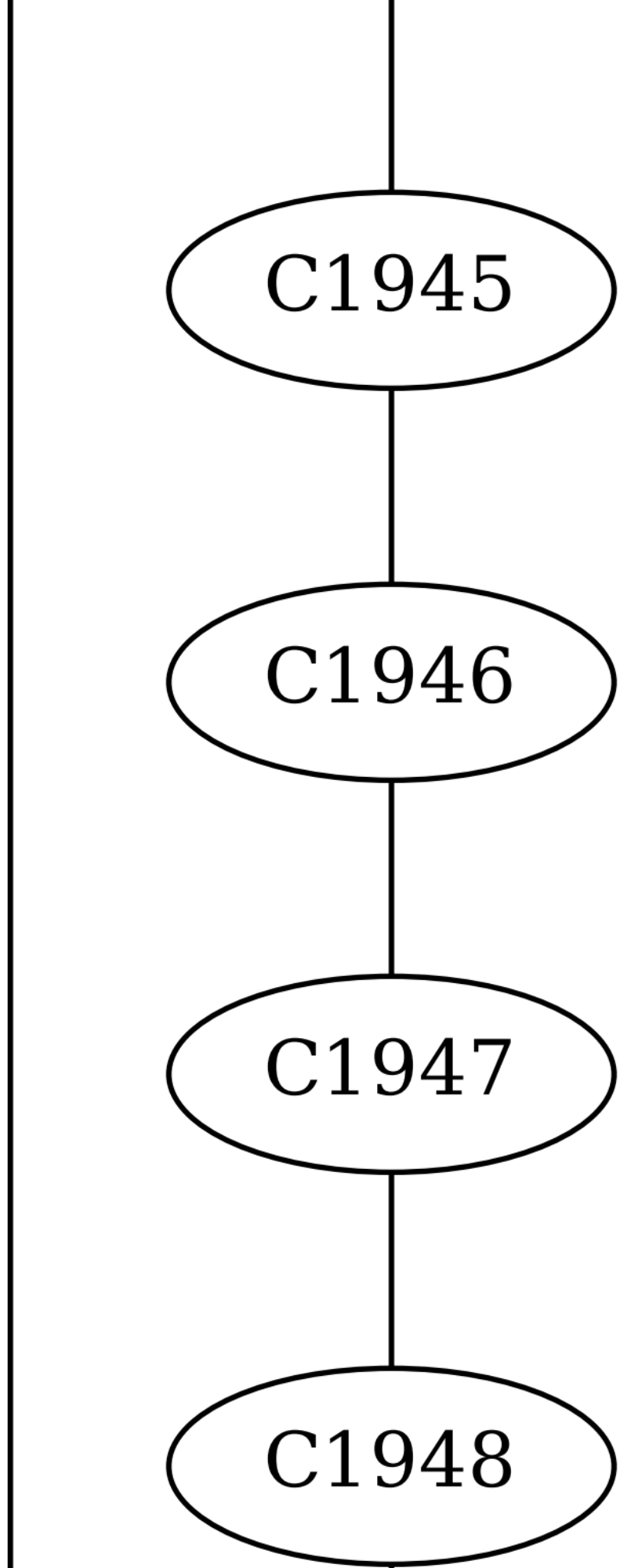
C1945
C1946
C1947
C1948

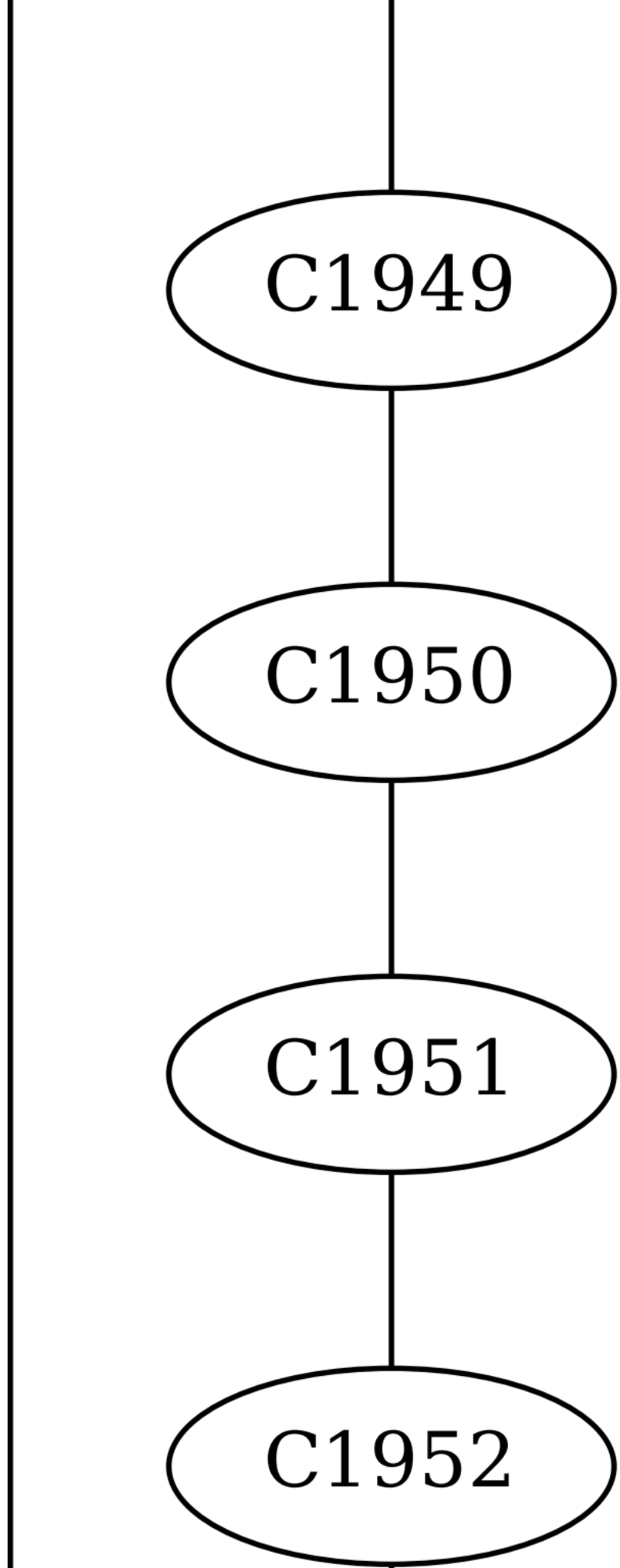
C1949
C1950
C1951
C1952

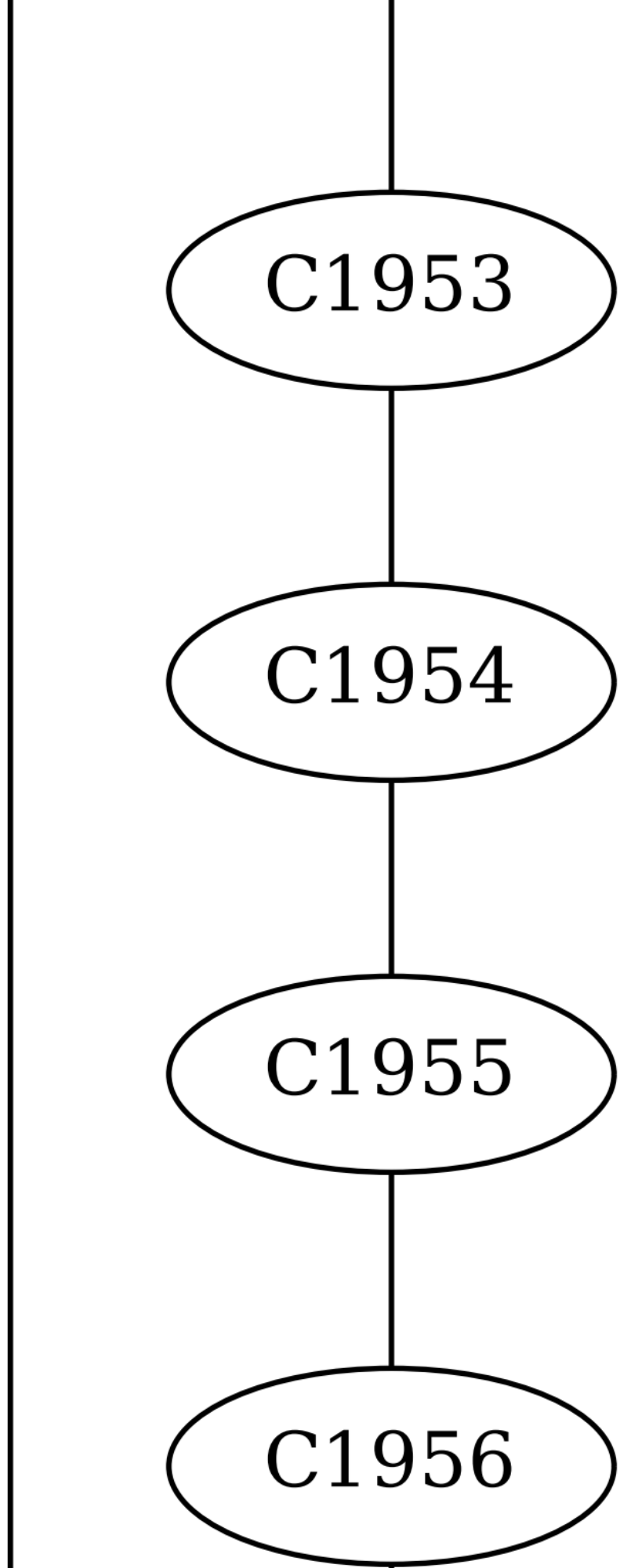
C1953
C1954
C1955
C1956

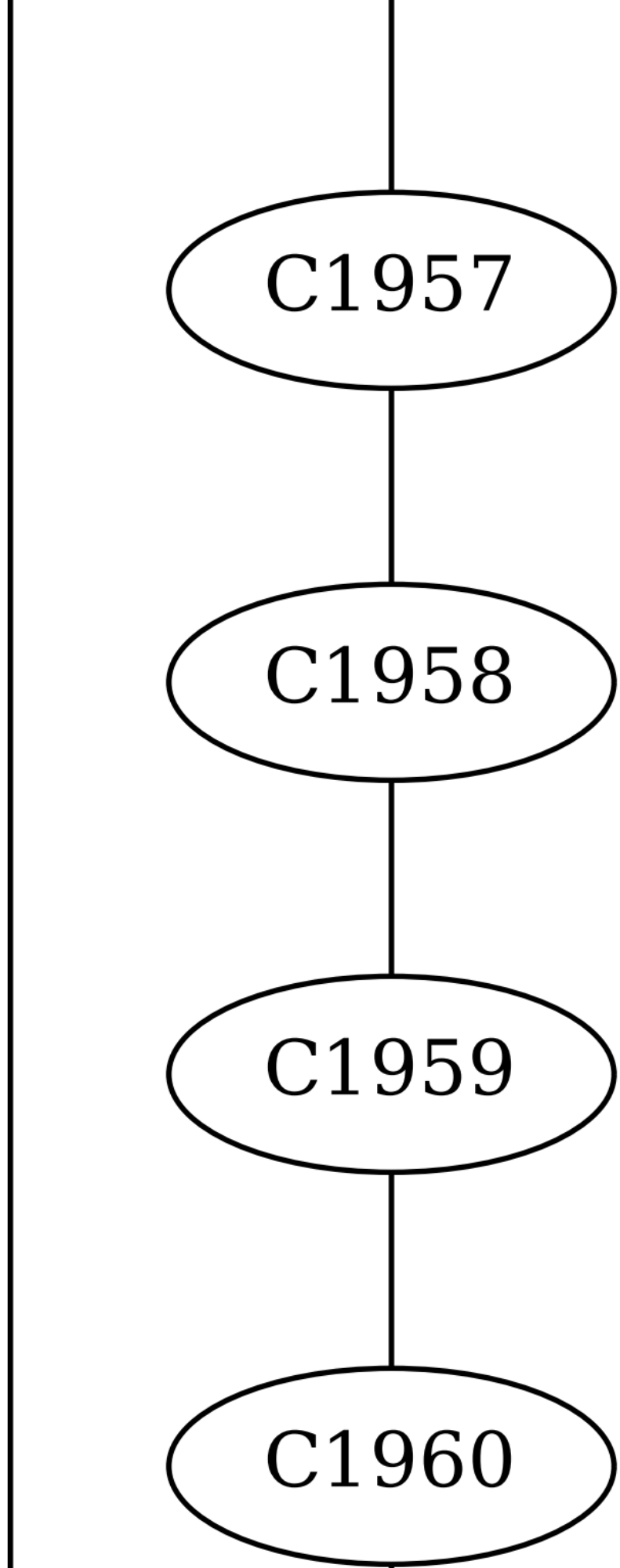
C1957
C1958
C1959
C1960

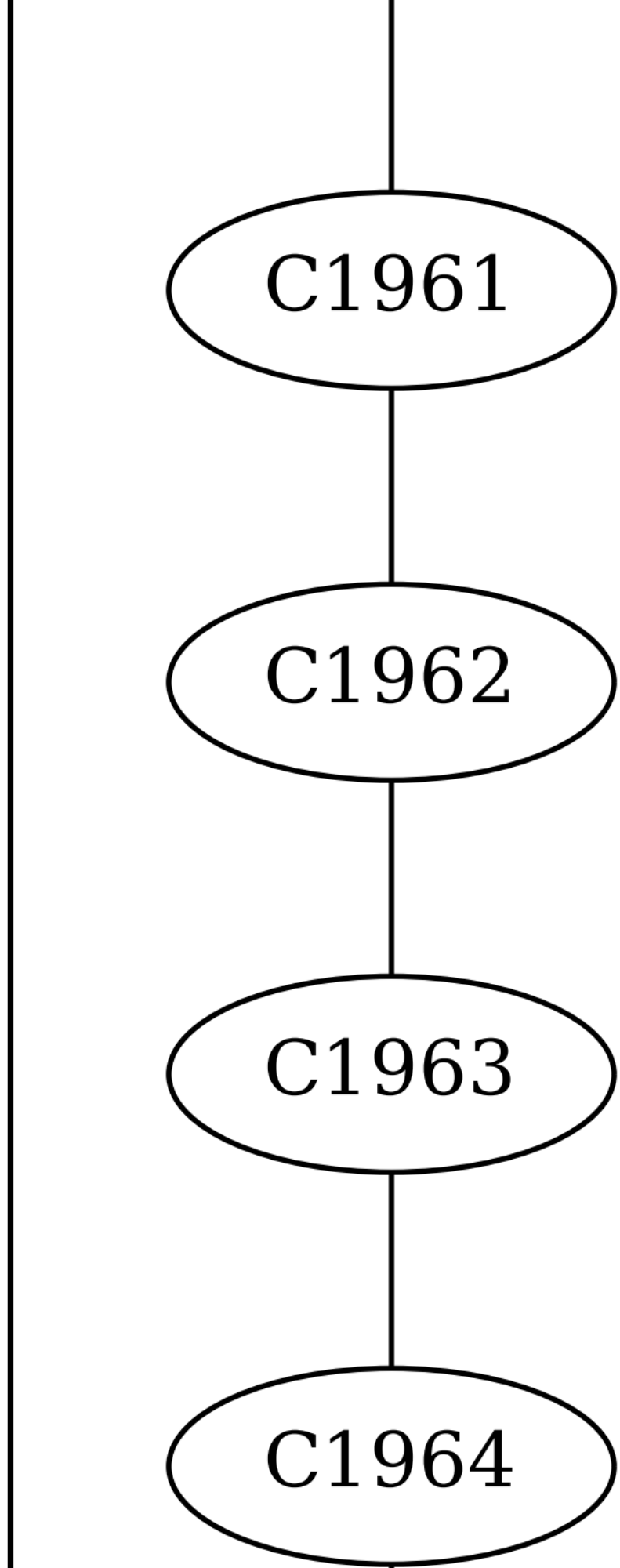
C1961
C1962
C1963
C1964

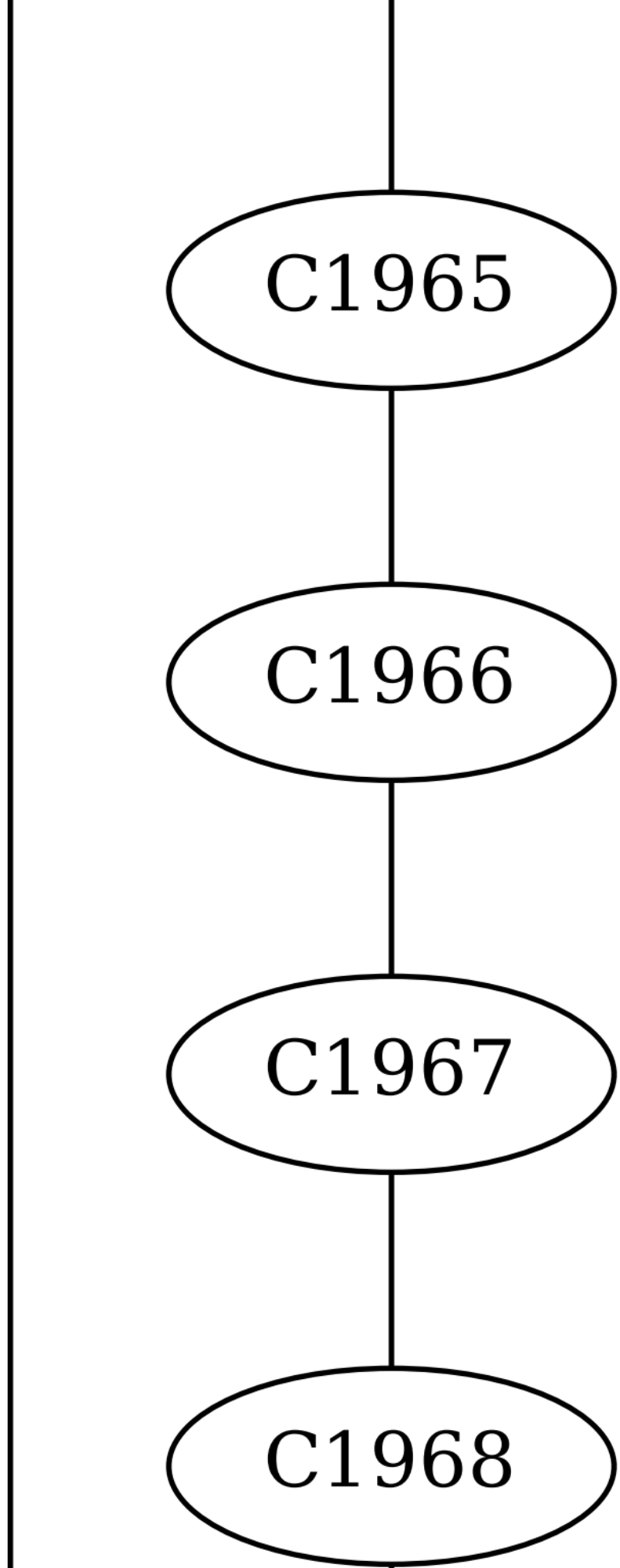
C1965
C1966
C1967
C1968

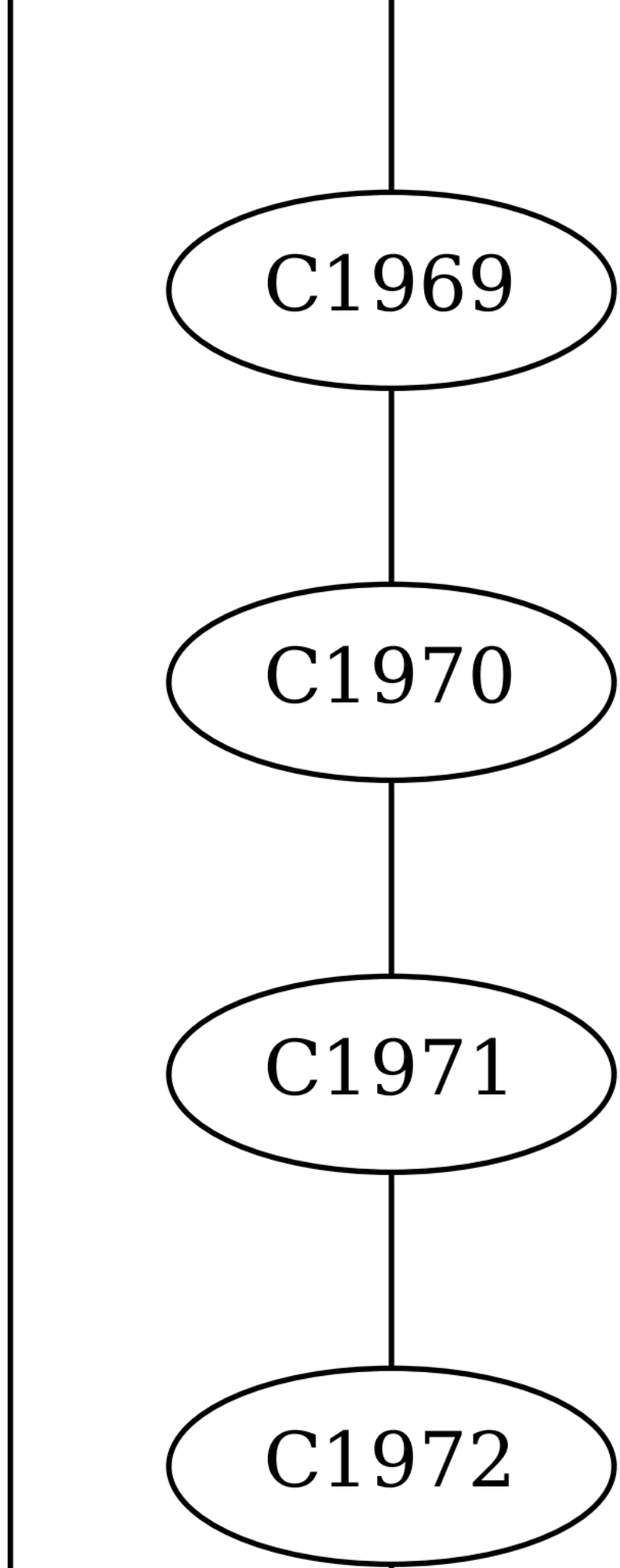
C1969
C1970
C1971
C1972

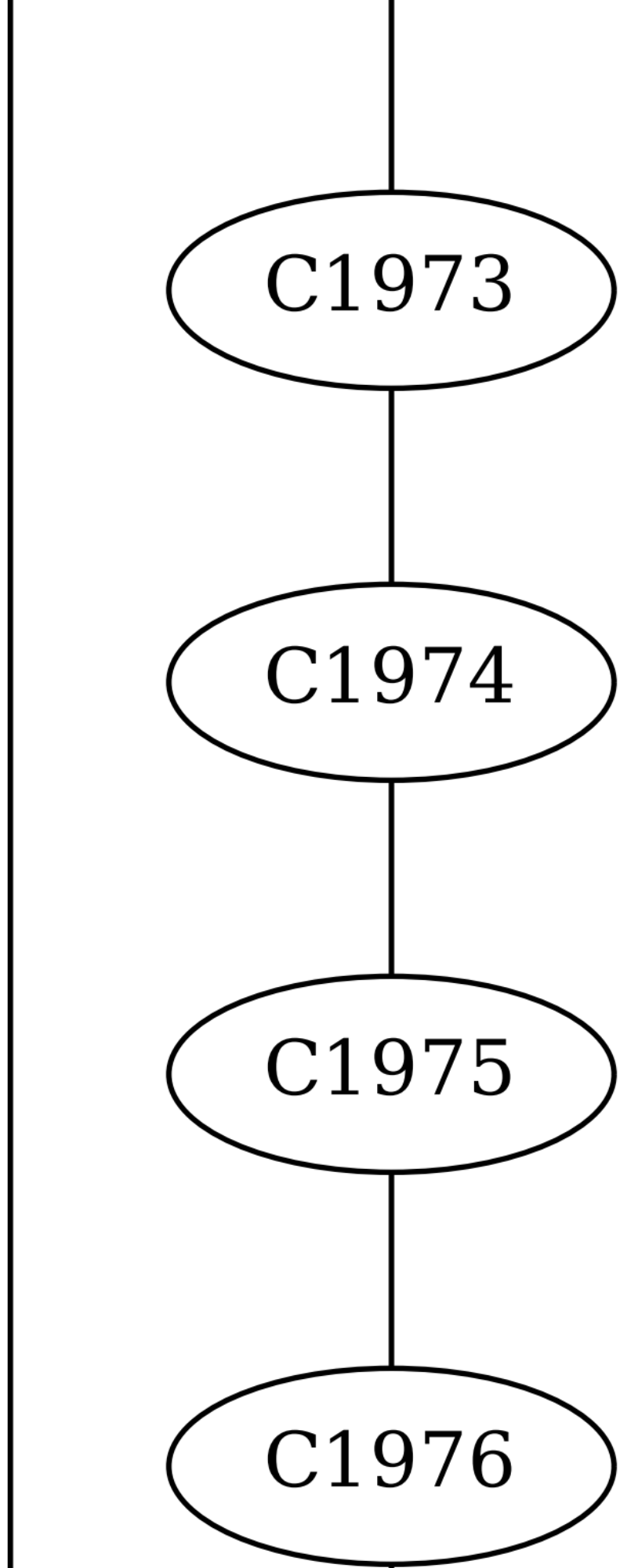
C1973
C1974
C1975
C1976

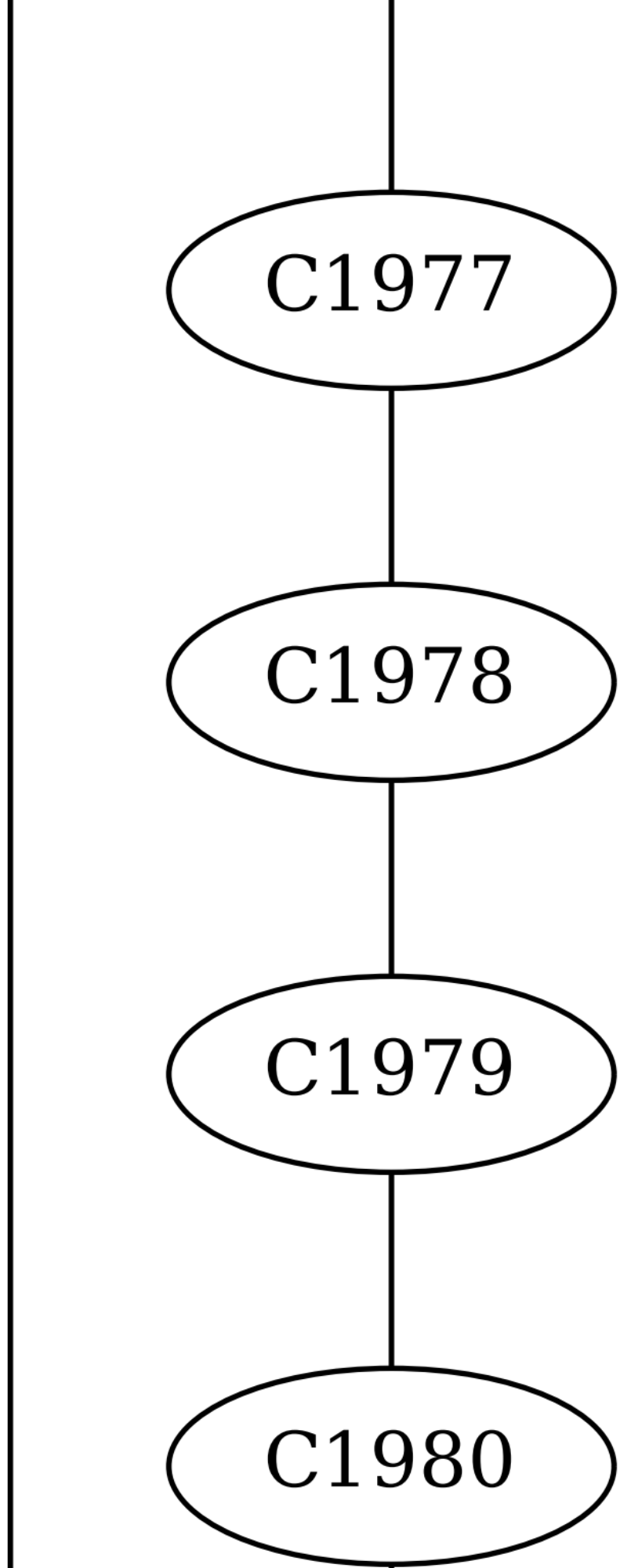
C1977
C1978
C1979
C1980

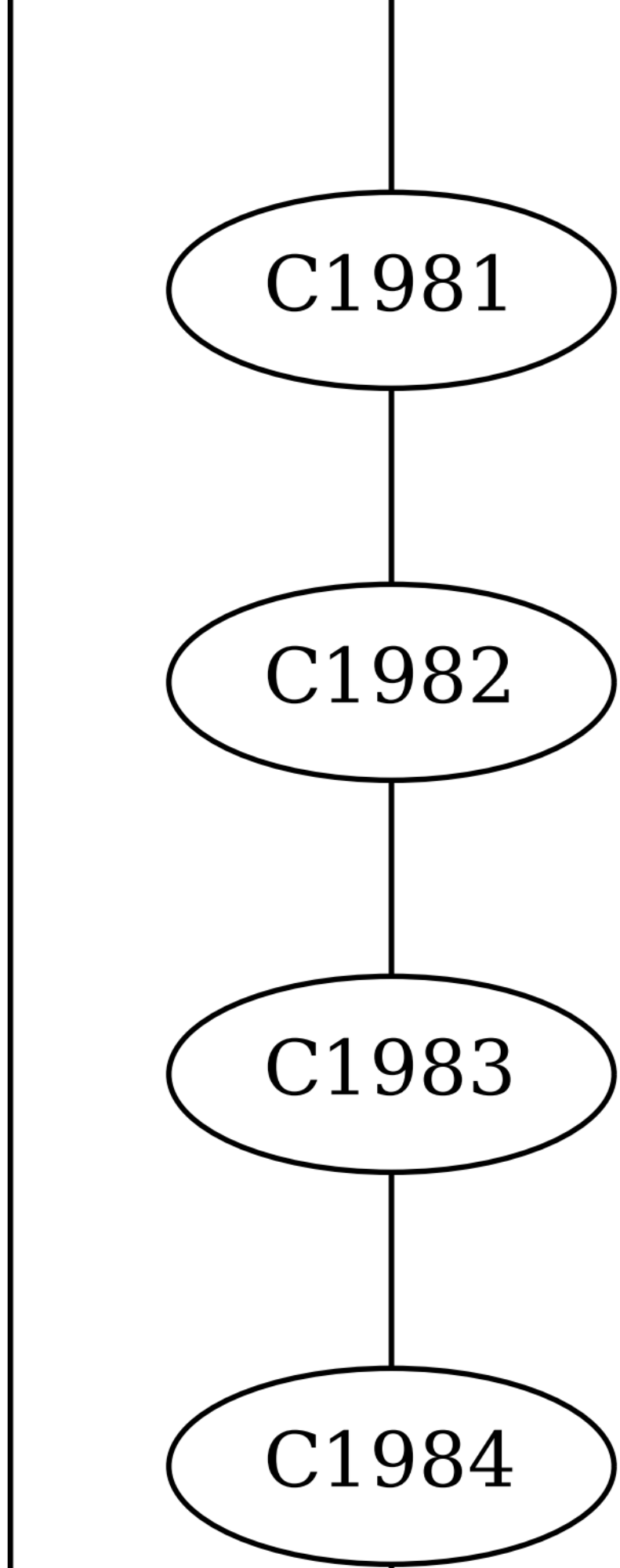
C1981
C1982
C1983
C1984

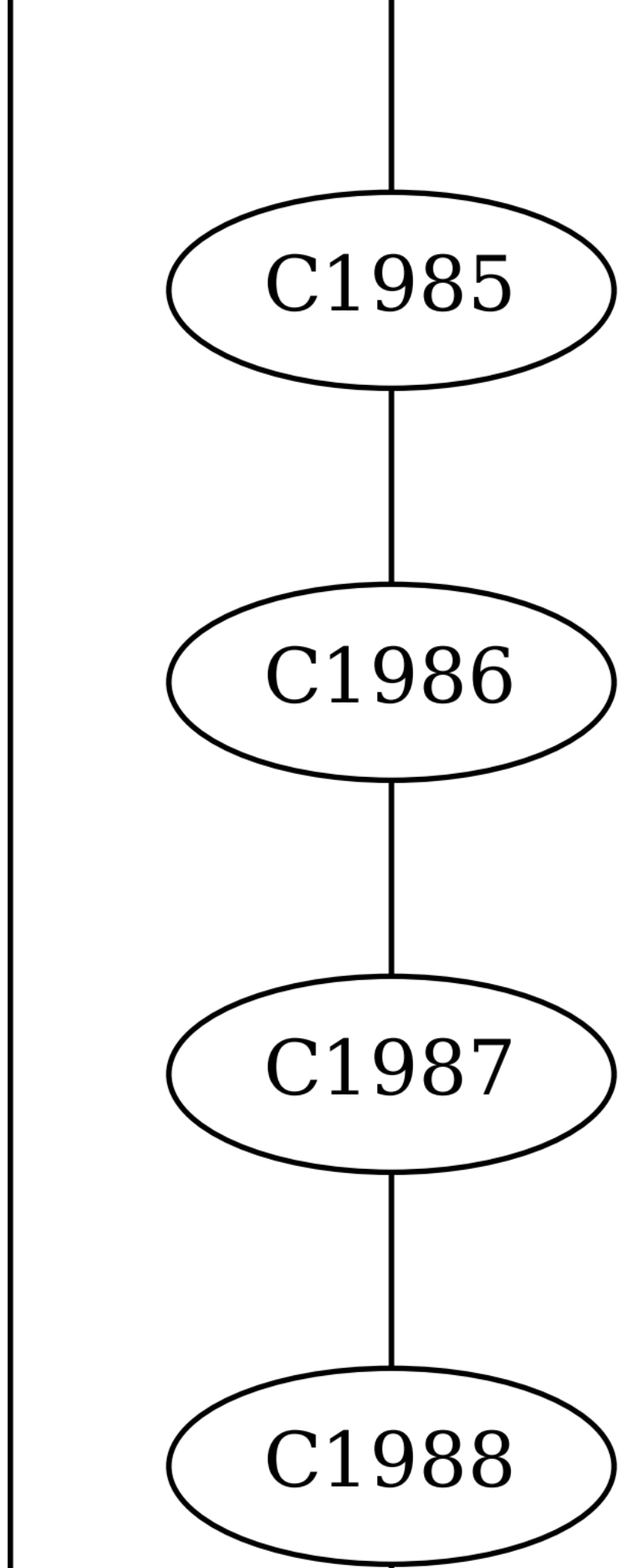
C1985
C1986
C1987
C1988

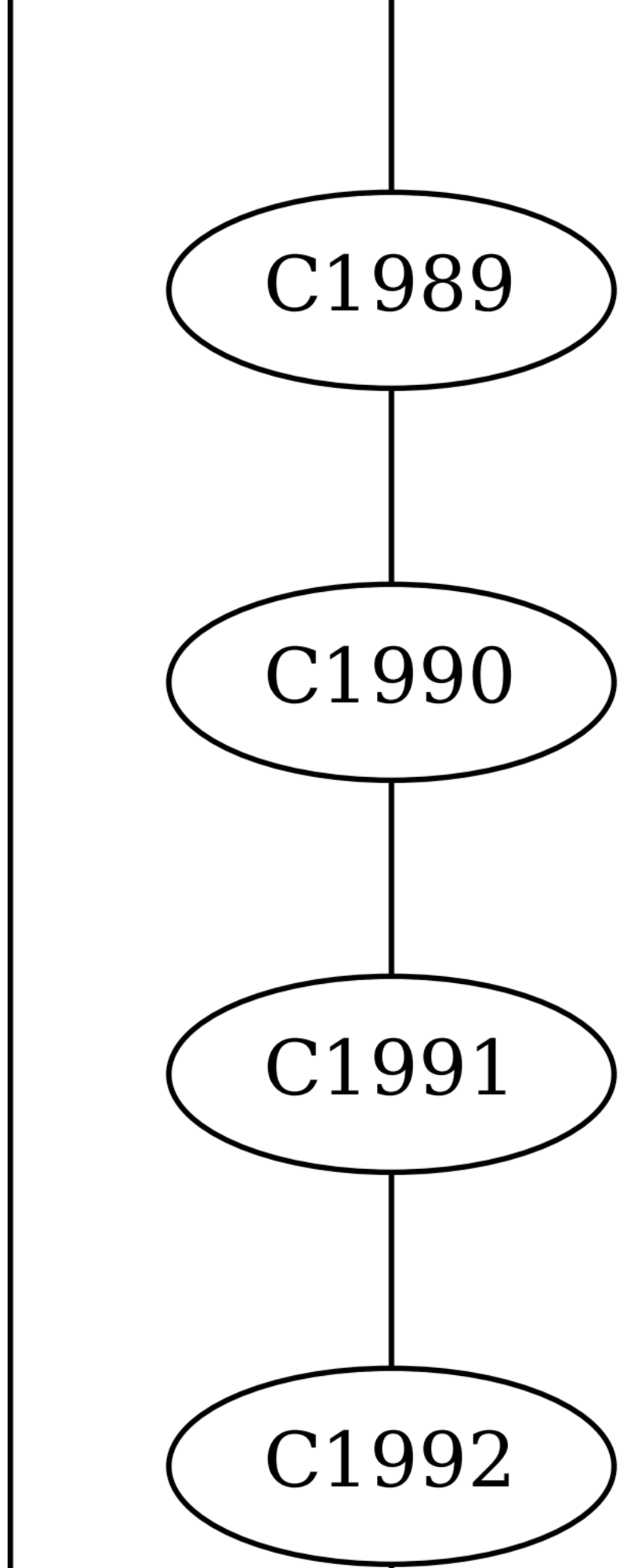
C1989
C1990
C1991
C1992

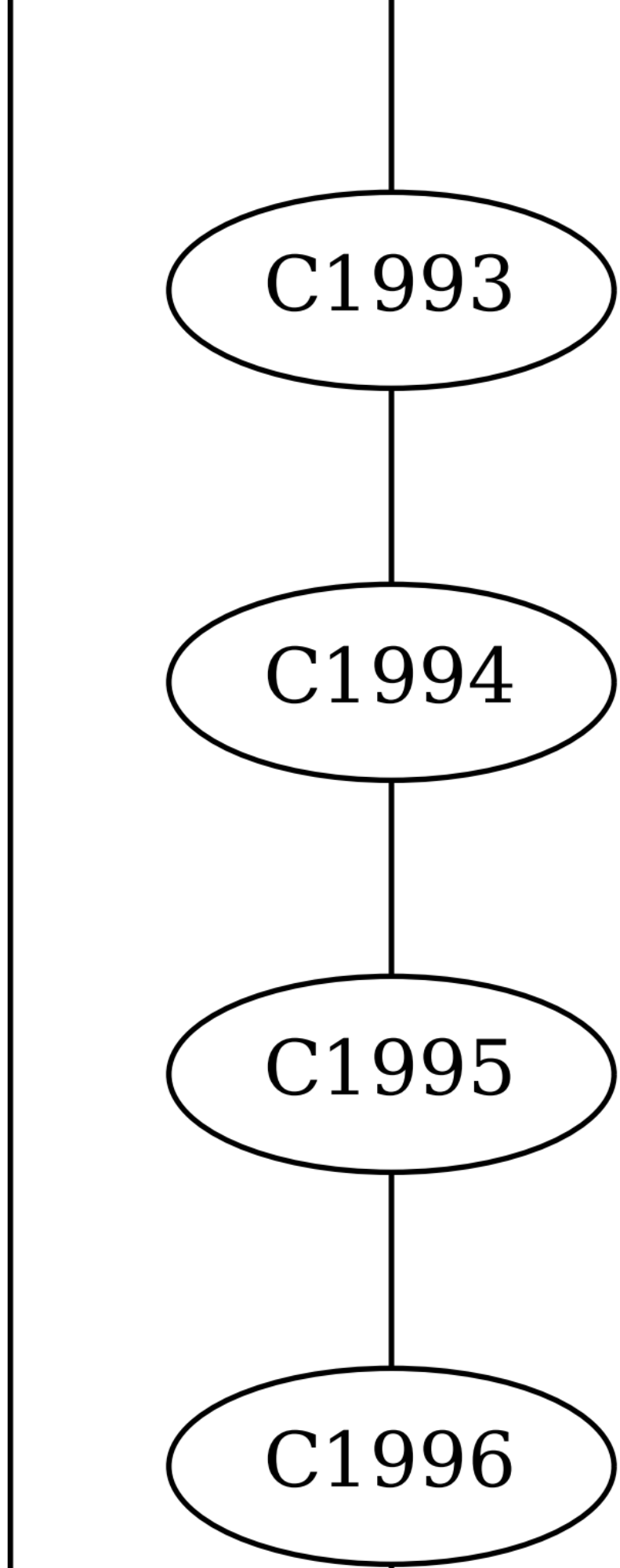
C1993
C1994
C1995
C1996

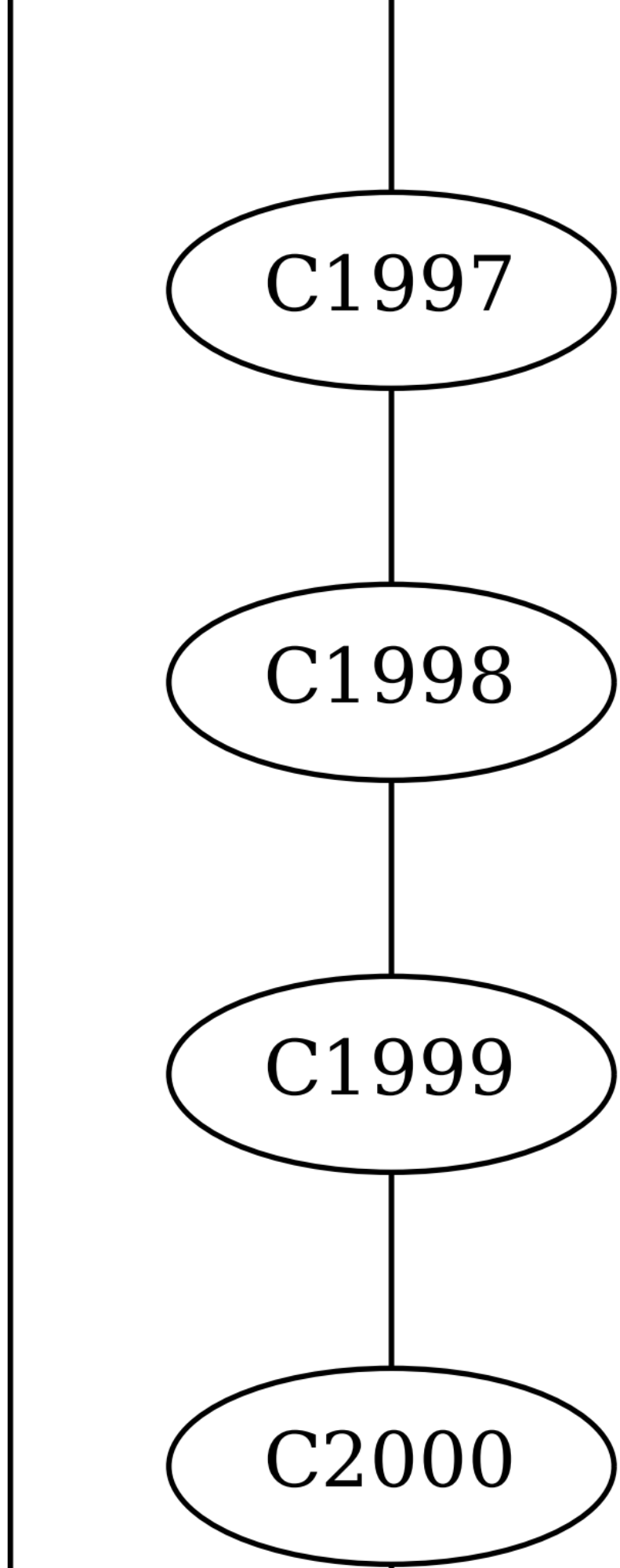
C1997
C1998
C1999
C2000

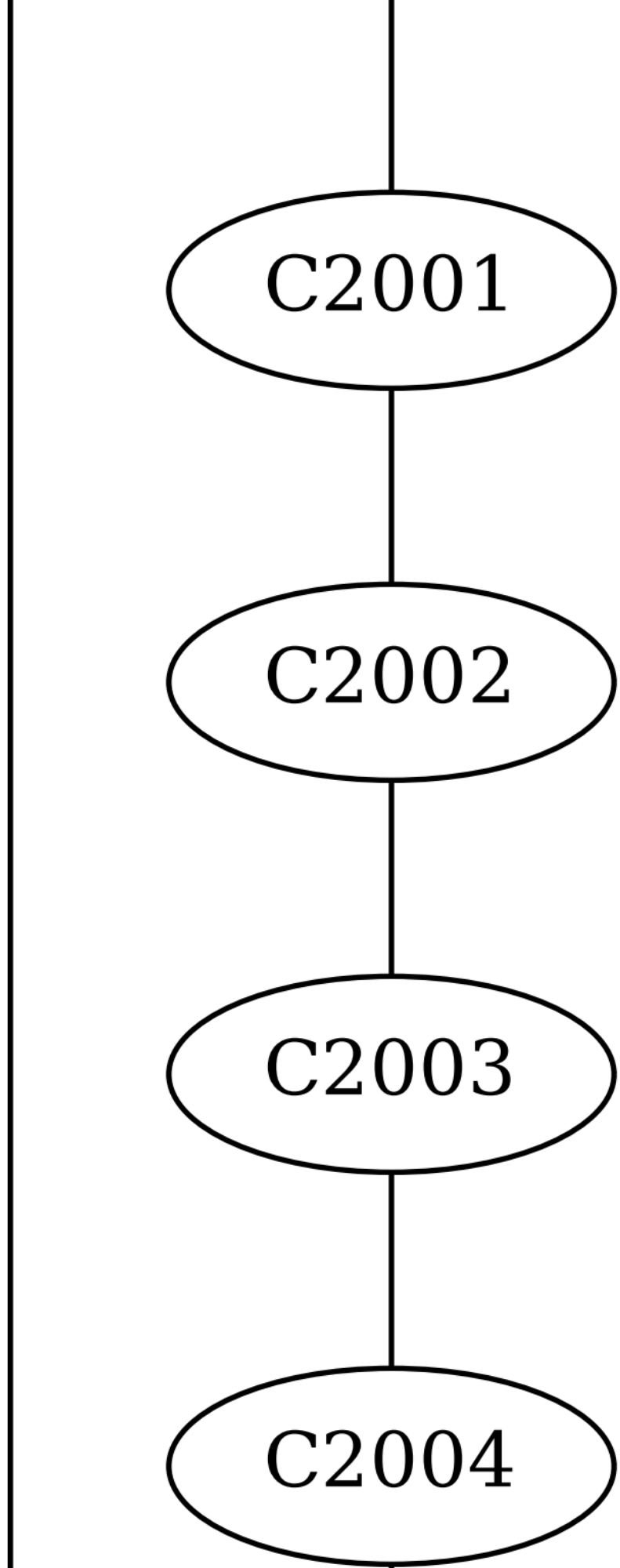
C2001
C2002
C2003
C2004

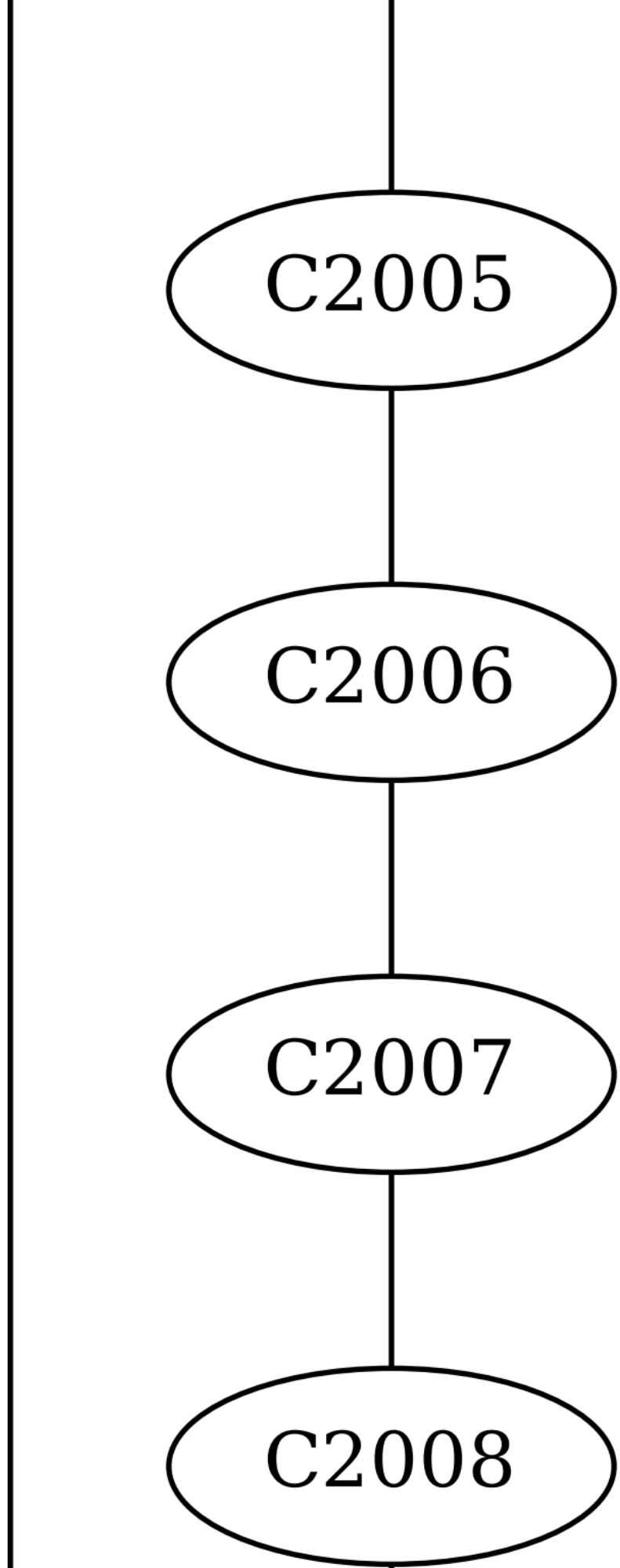
C2005
C2006
C2007
C2008

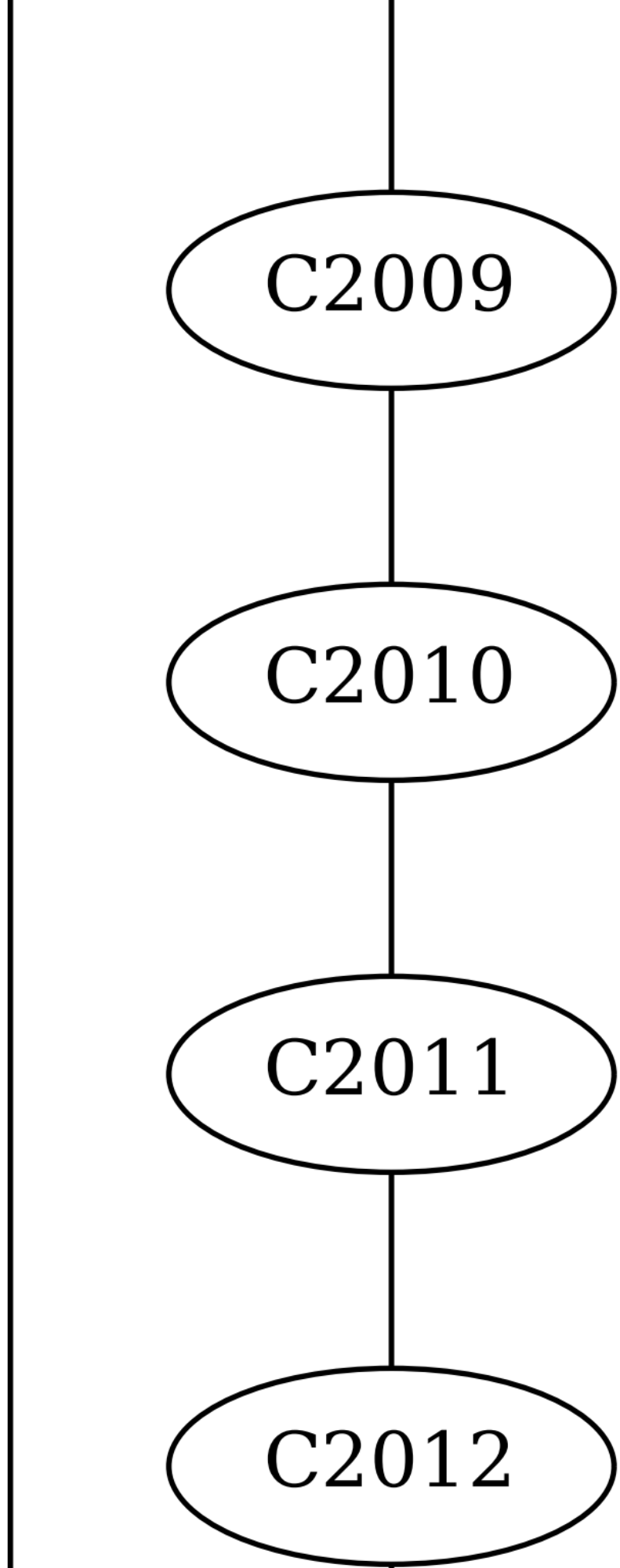
C2009
C2010
C2011
C2012

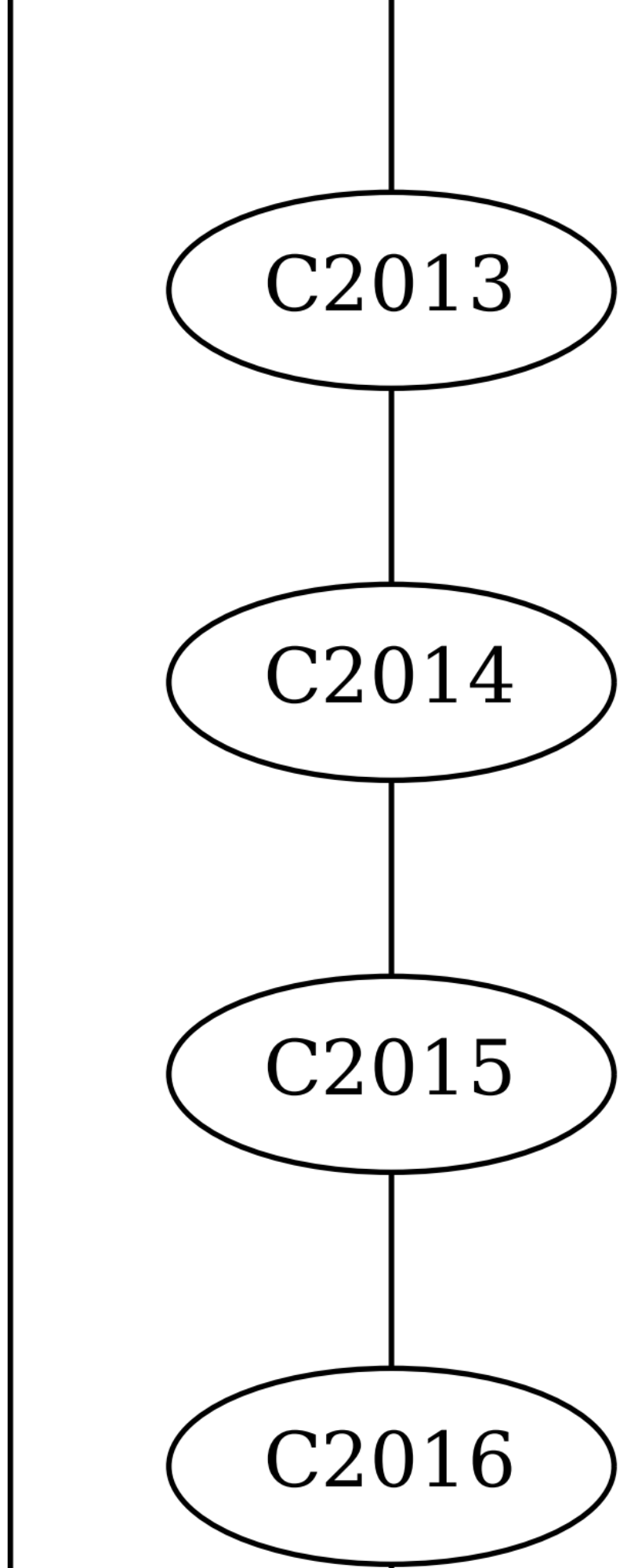
C2013
C2014
C2015
C2016

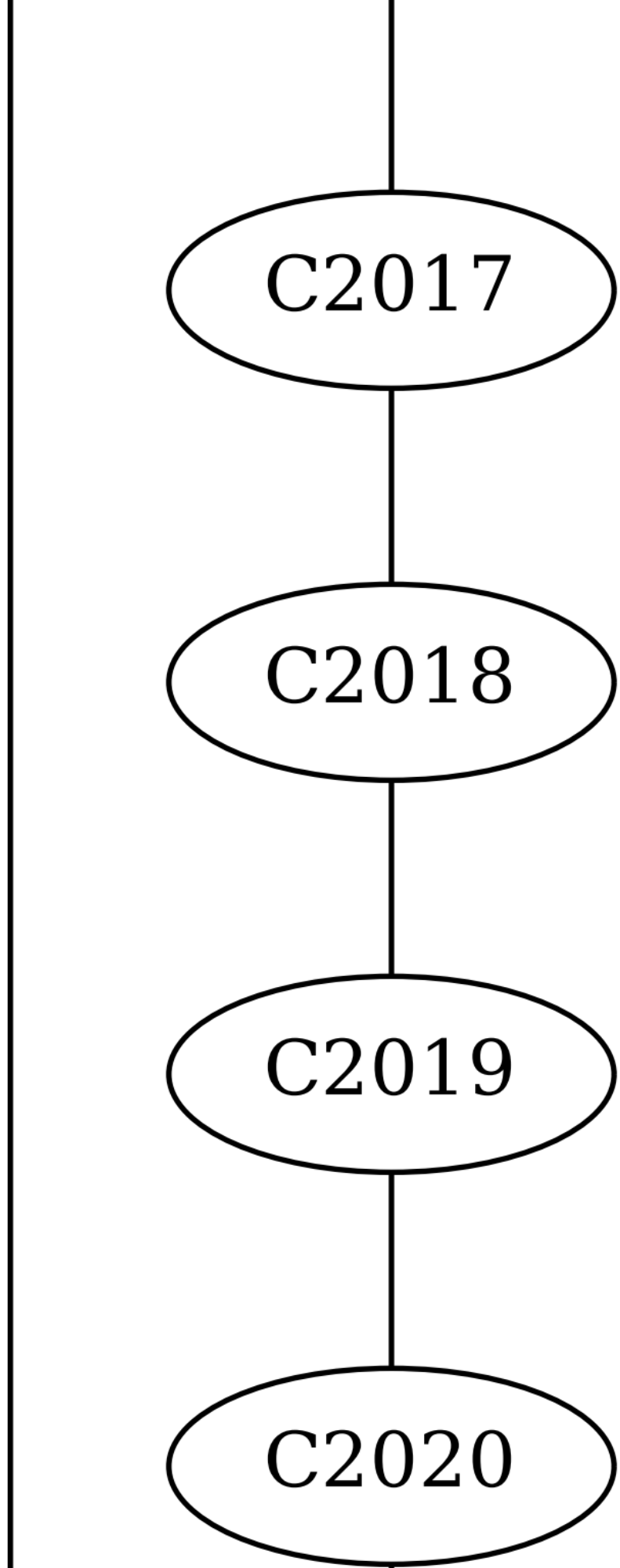
C2017
C2018
C2019
C2020

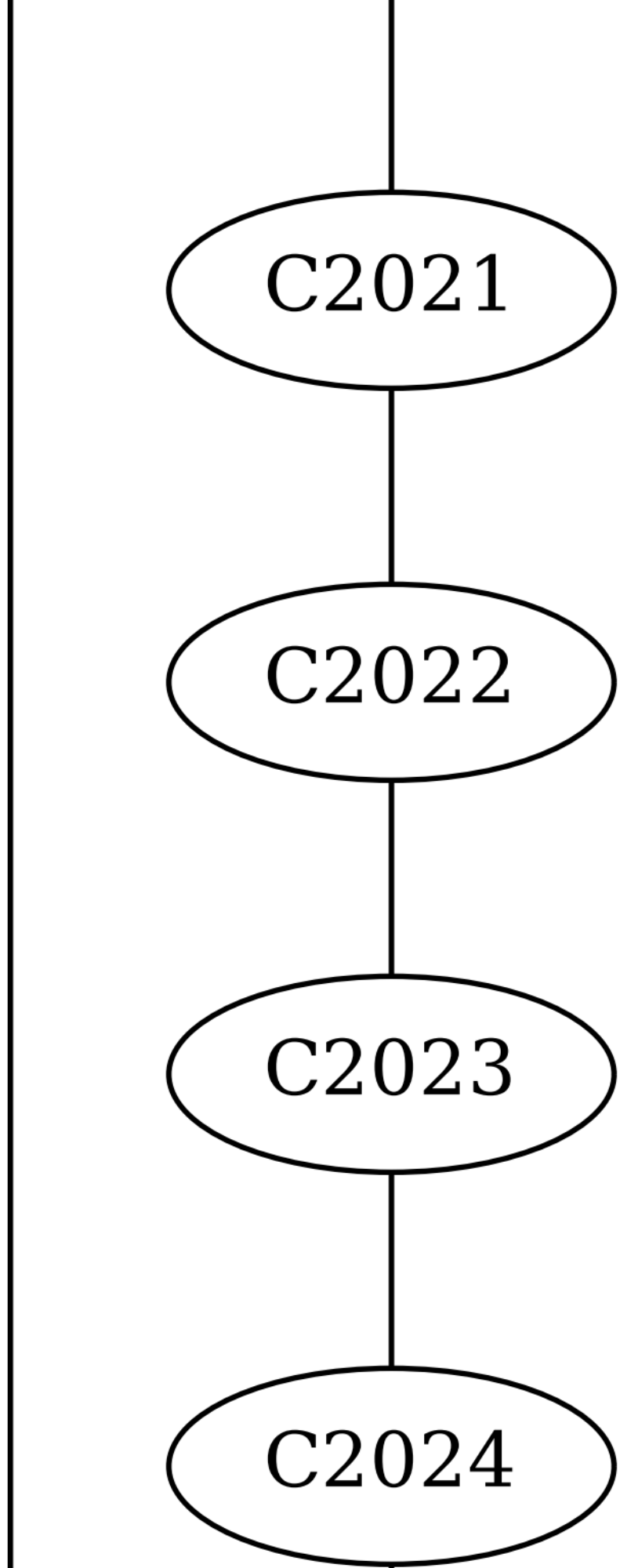
C2021
C2022
C2023
C2024

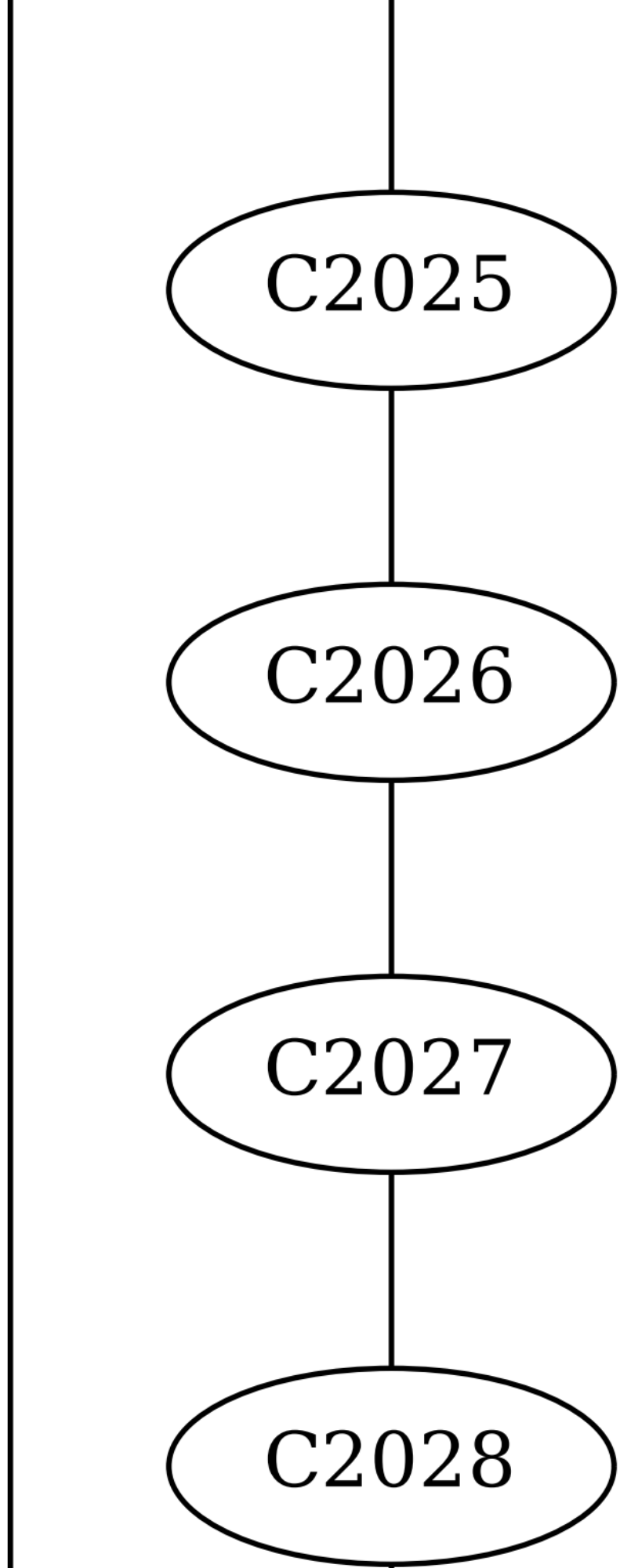
C2025
C2026
C2027
C2028

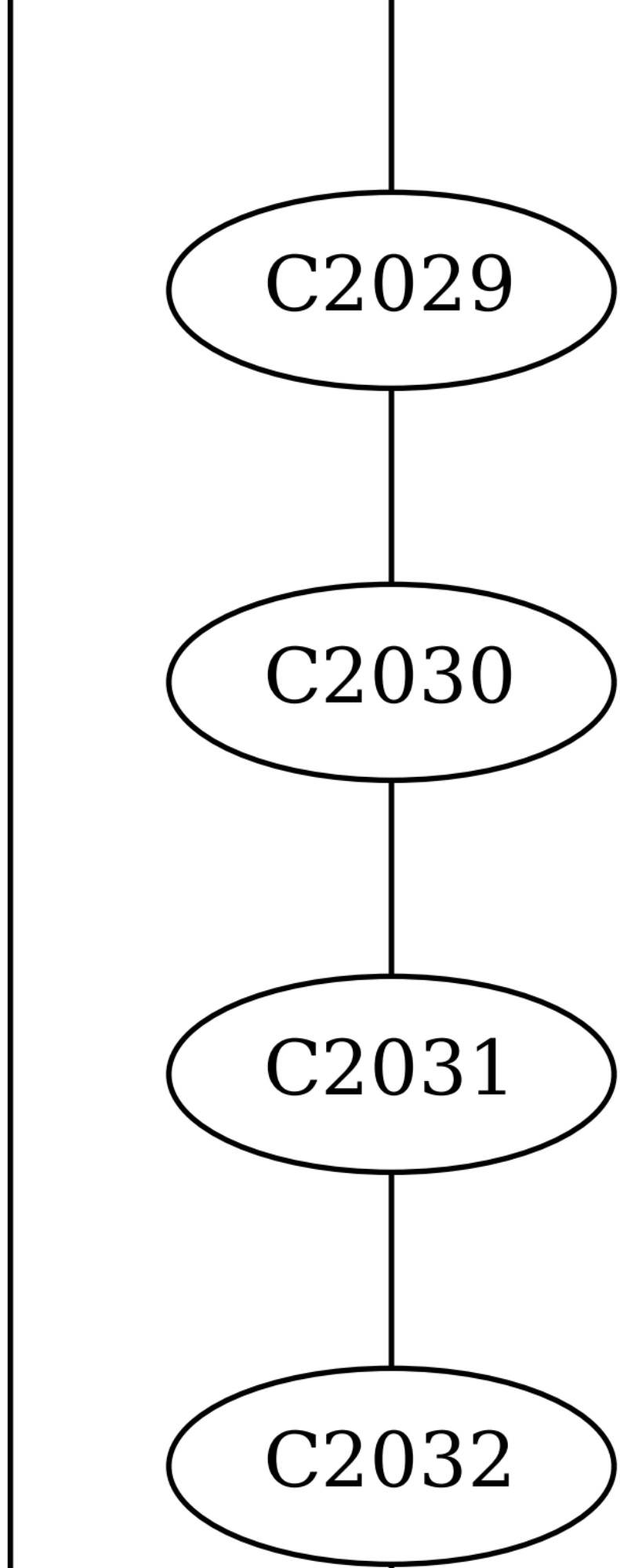
C2029
C2030
C2031
C2032

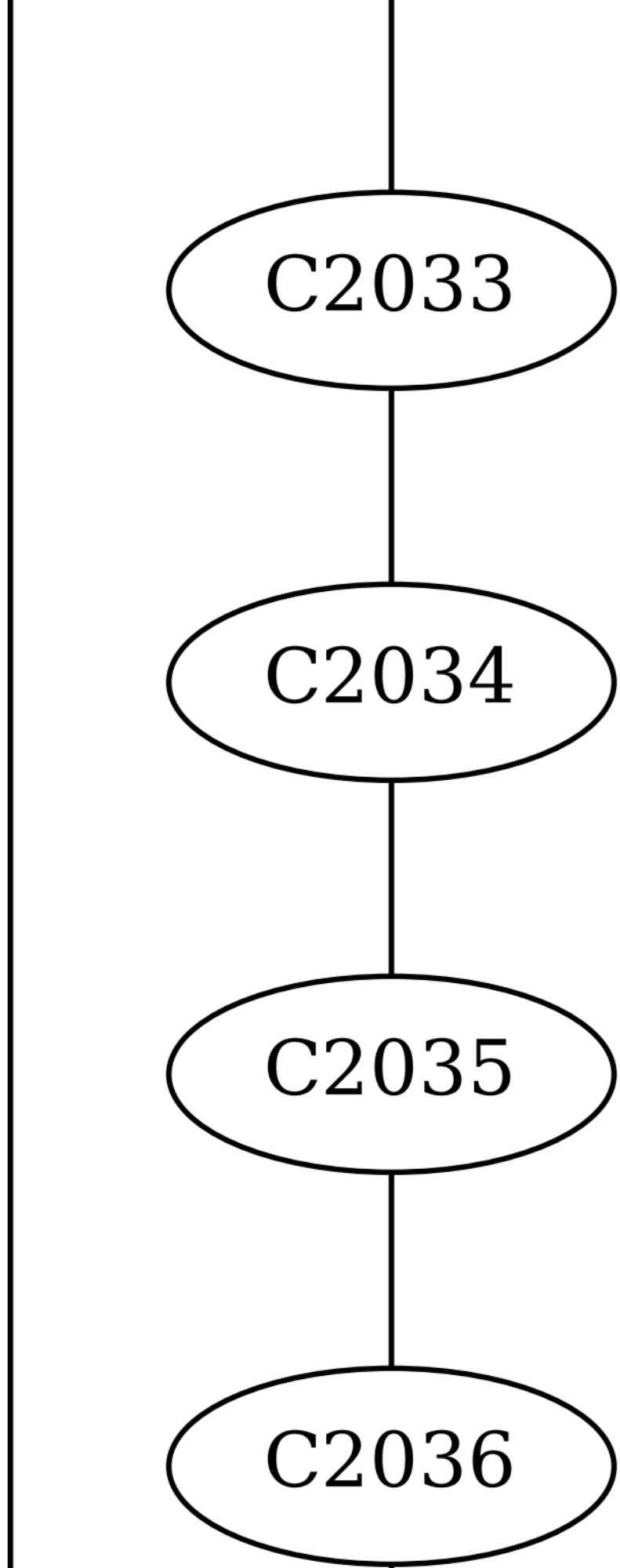
C2033
C2034
C2035
C2036

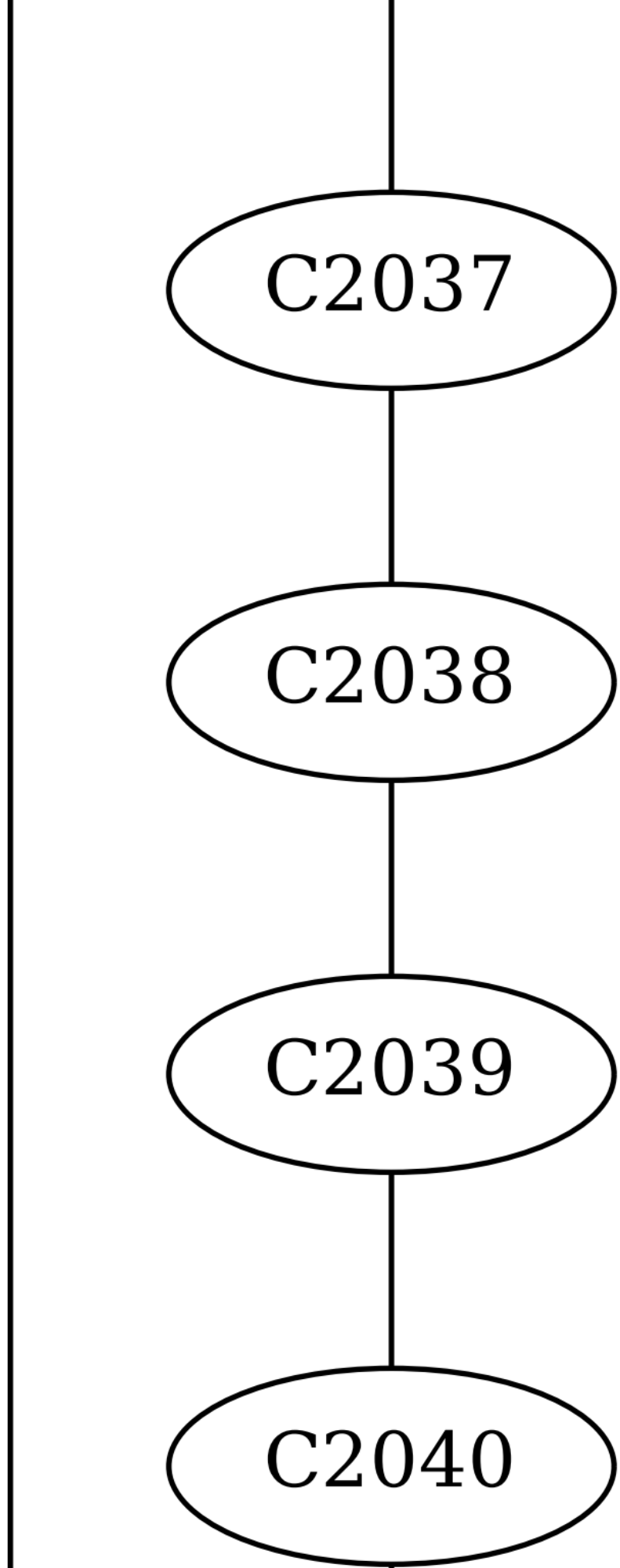
C2037
C2038
C2039
C2040

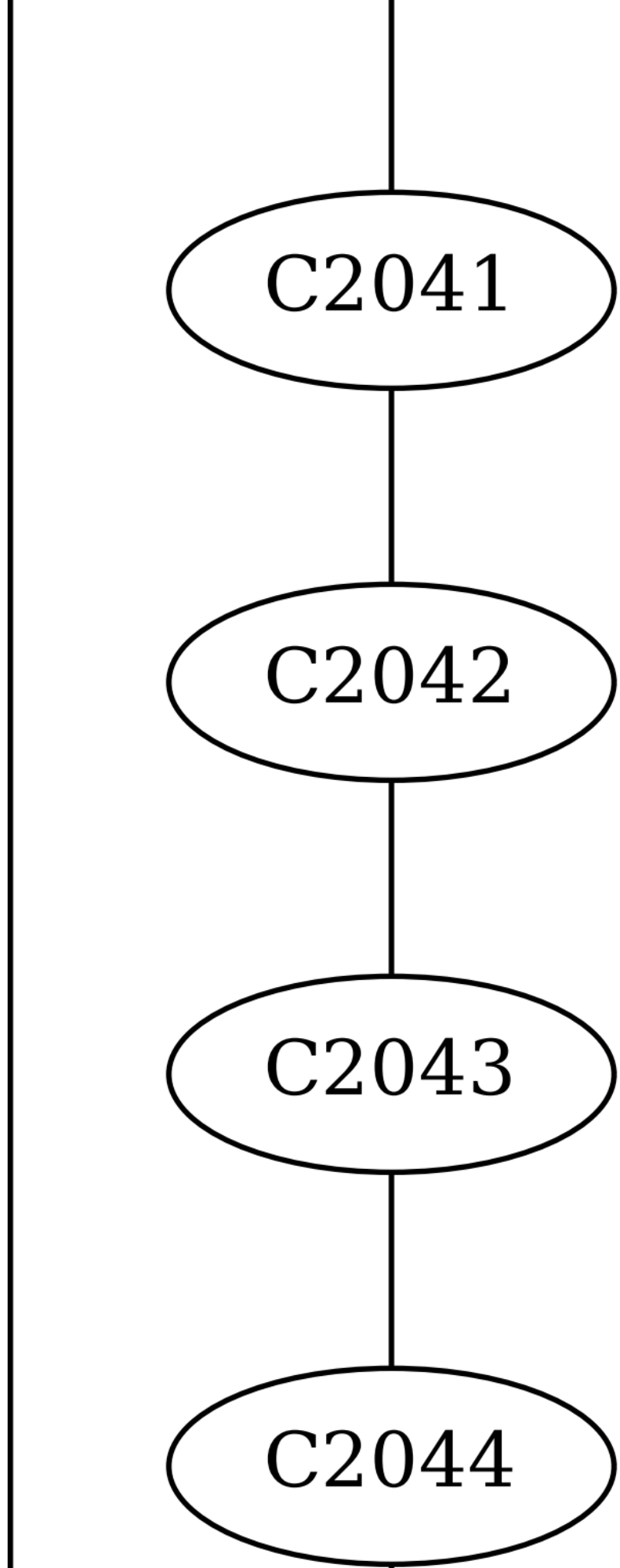
C2041
C2042
C2043
C2044

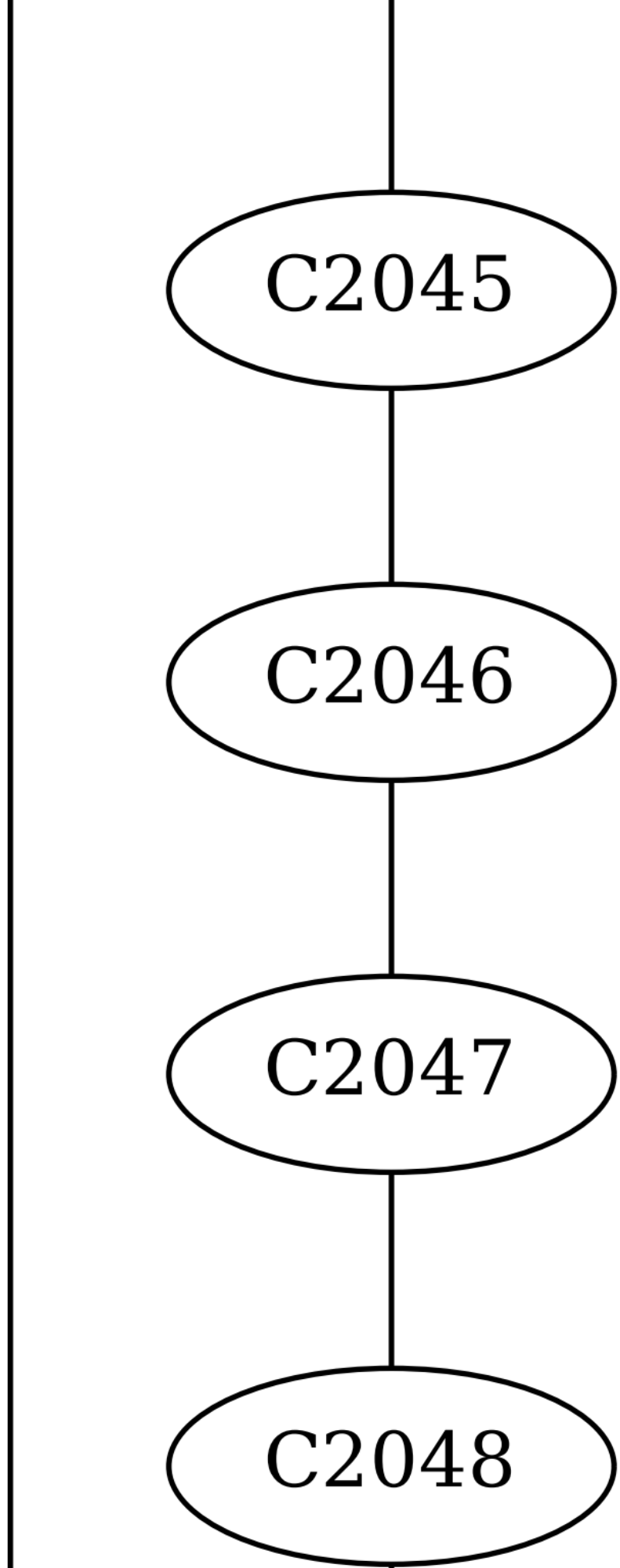
C2045
C2046
C2047
C2048

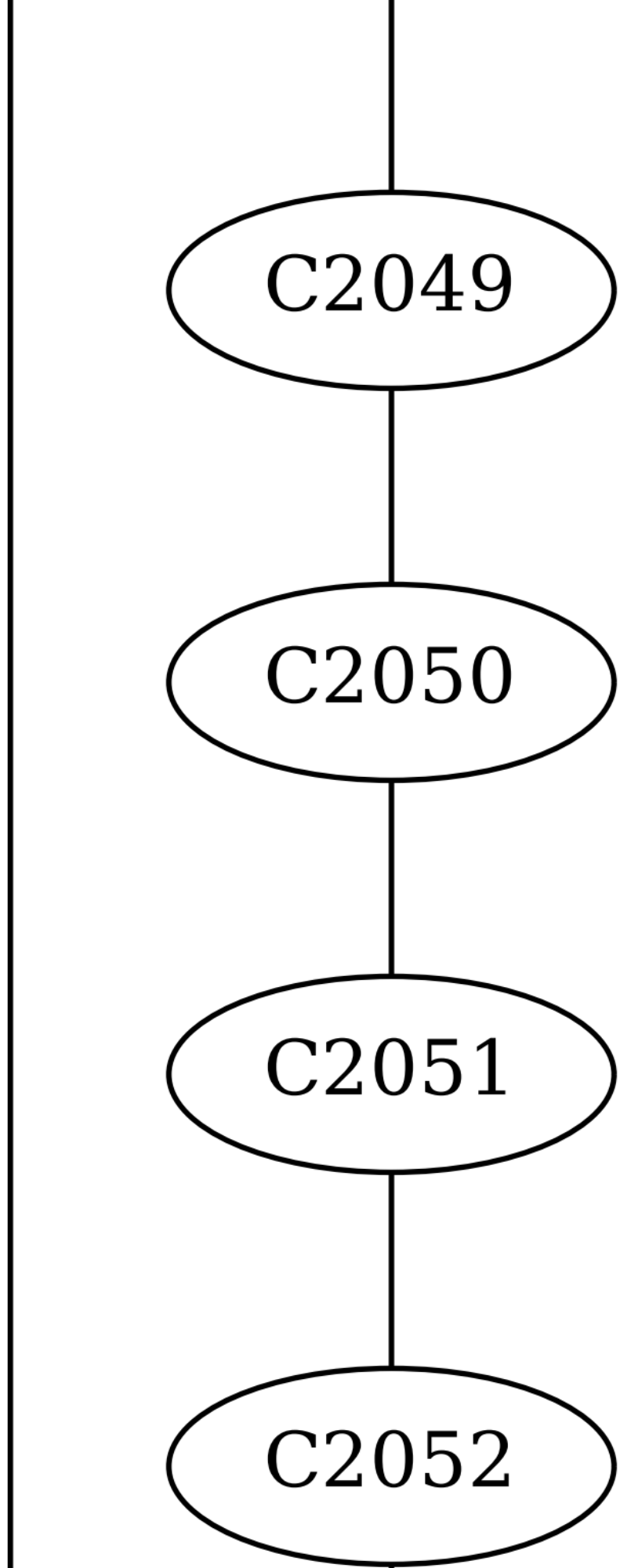
C2049
C2050
C2051
C2052

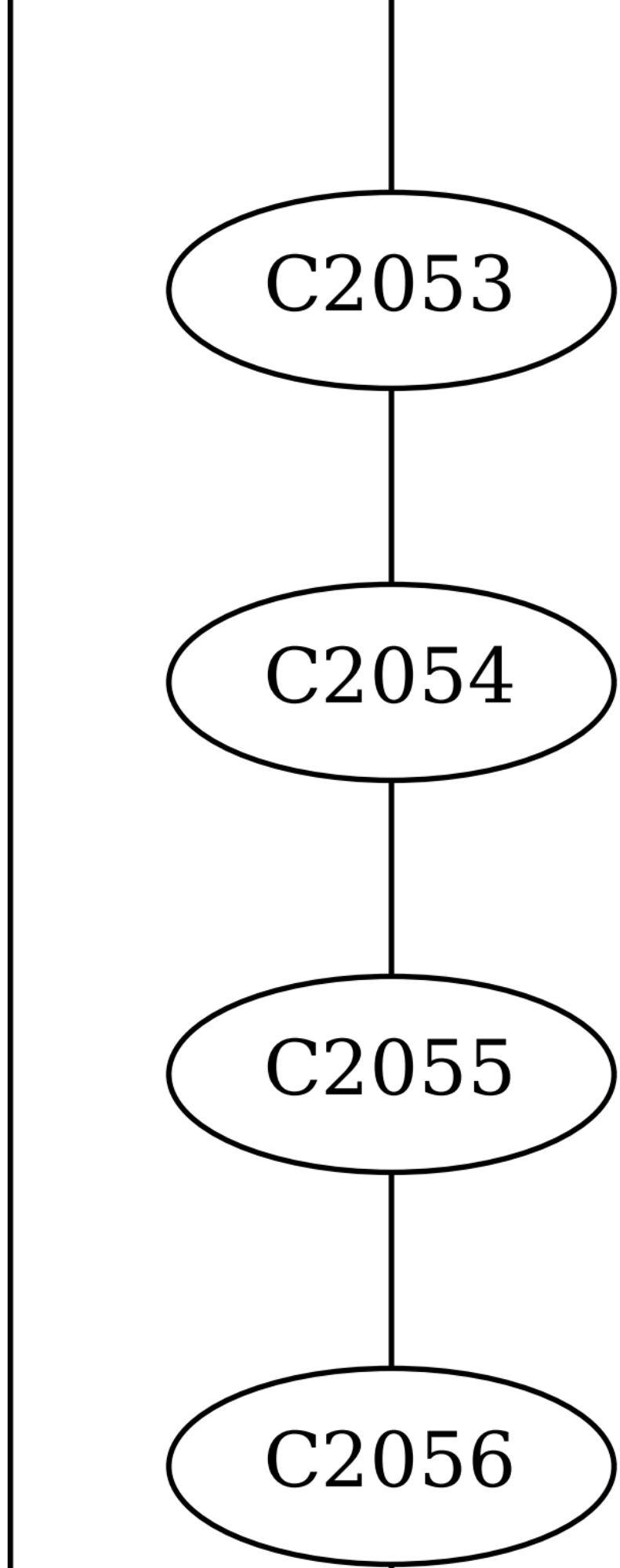
C2053
C2054
C2055
C2056

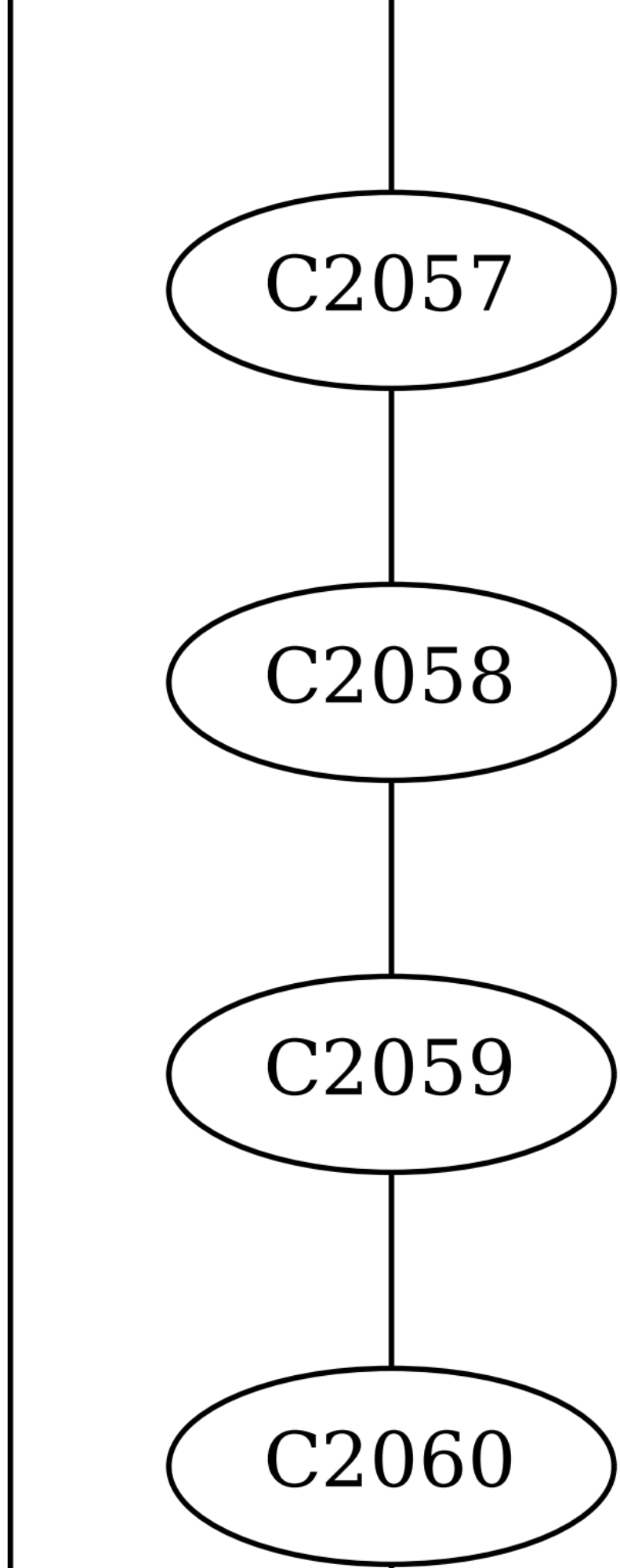
C2057
C2058
C2059
C2060

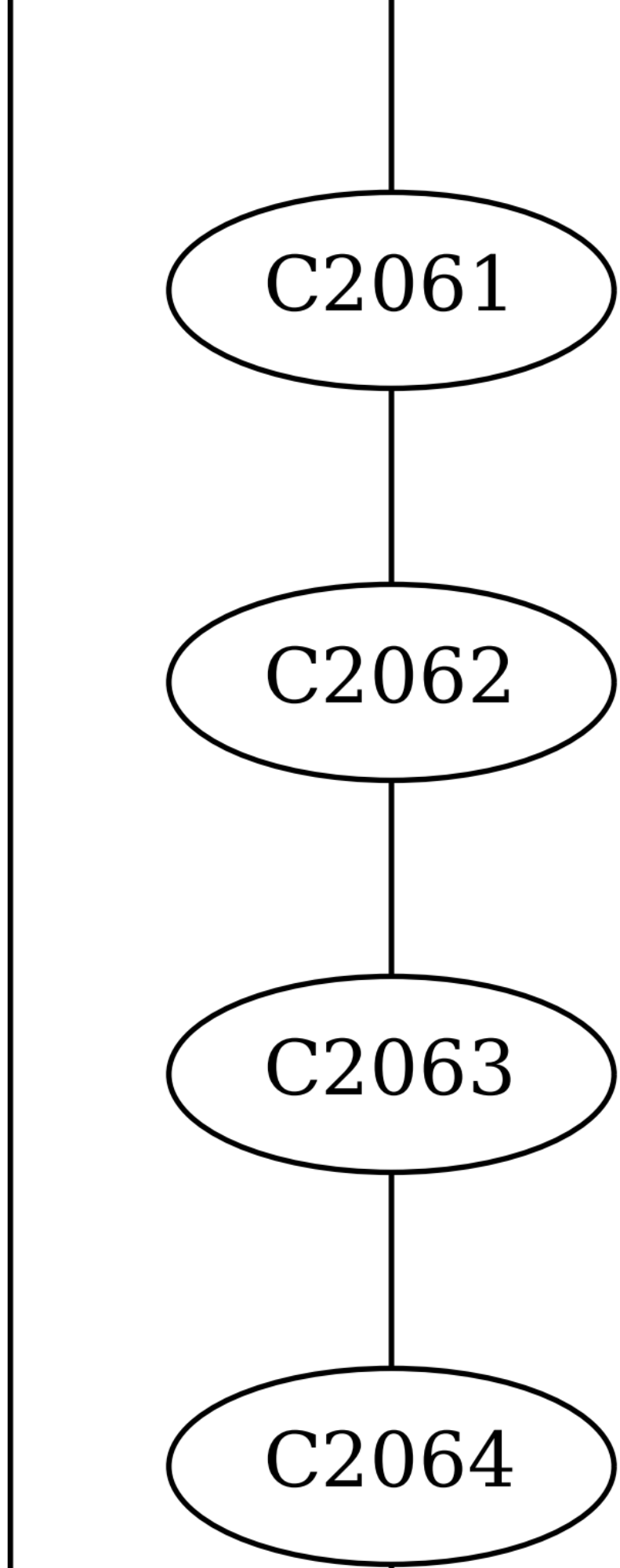
C2061
C2062
C2063
C2064

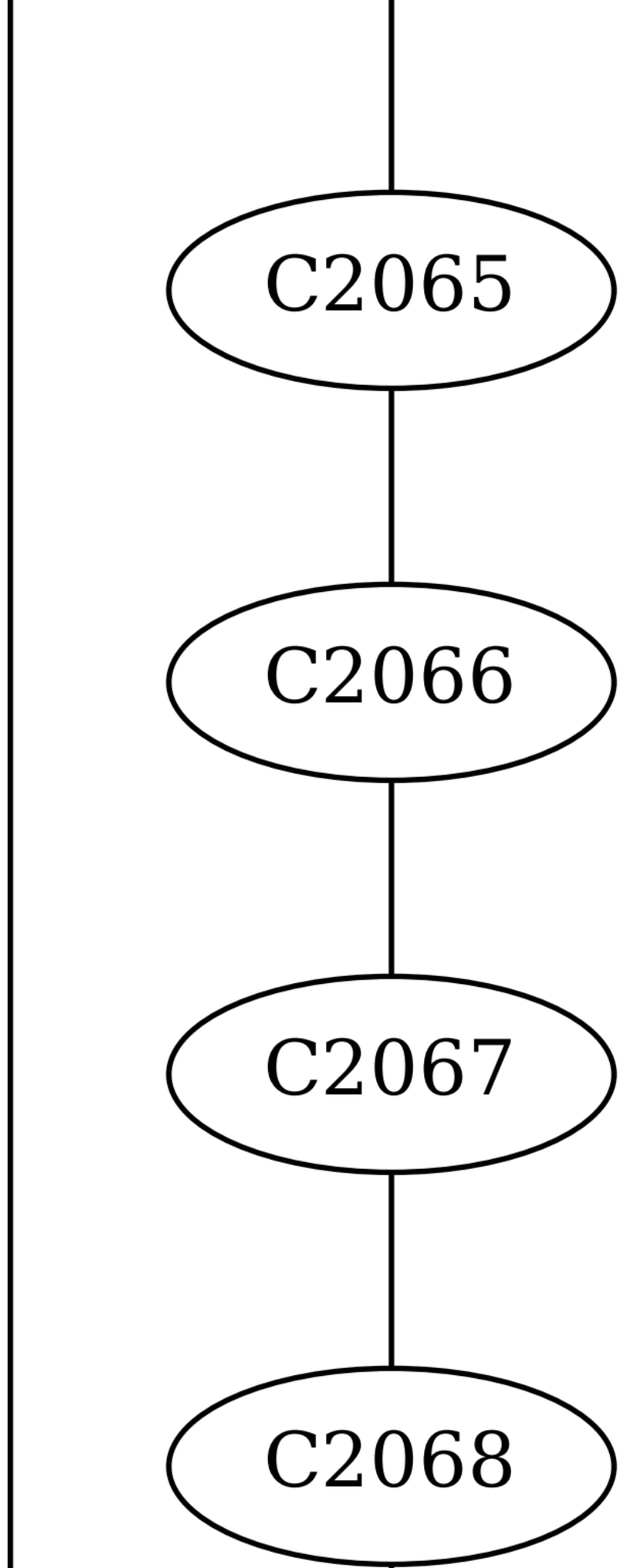
C2065
C2066
C2067
C2068

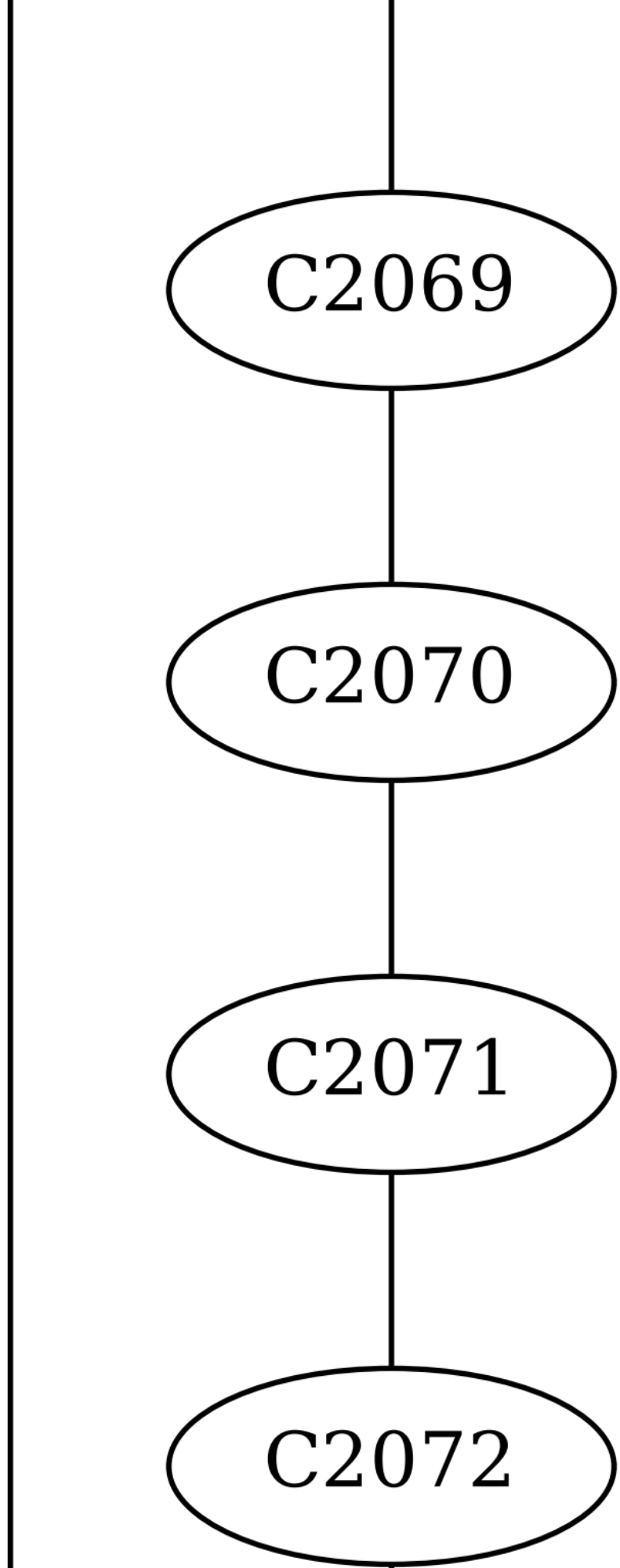
C2069
C2070
C2071
C2072

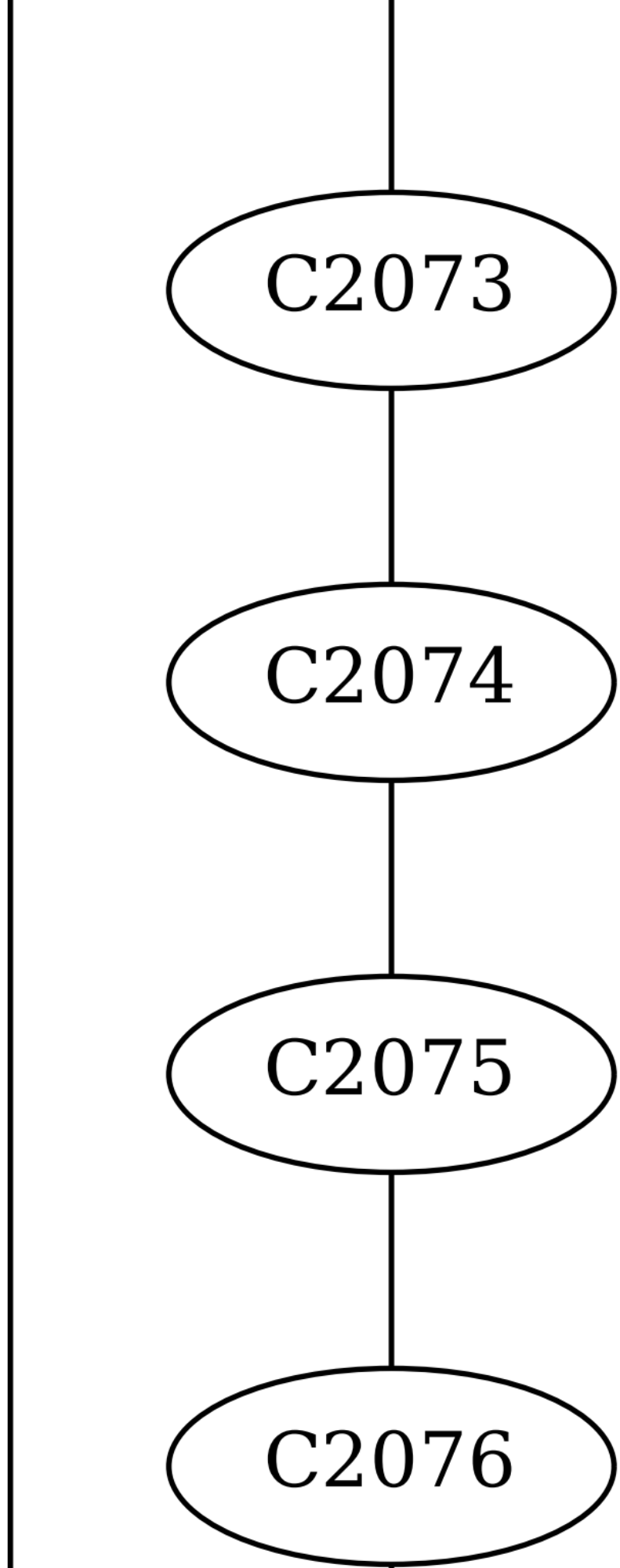
C2073
C2074
C2075
C2076

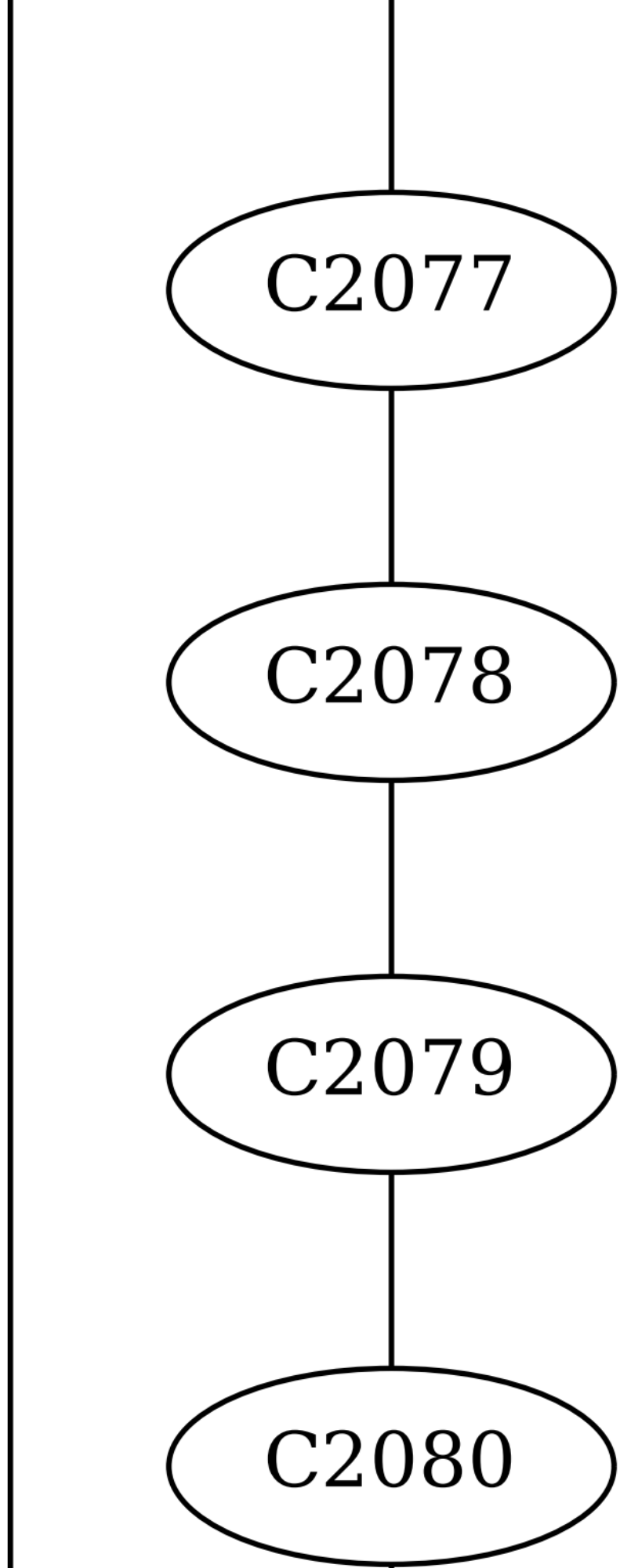
C2077
C2078
C2079
C2080

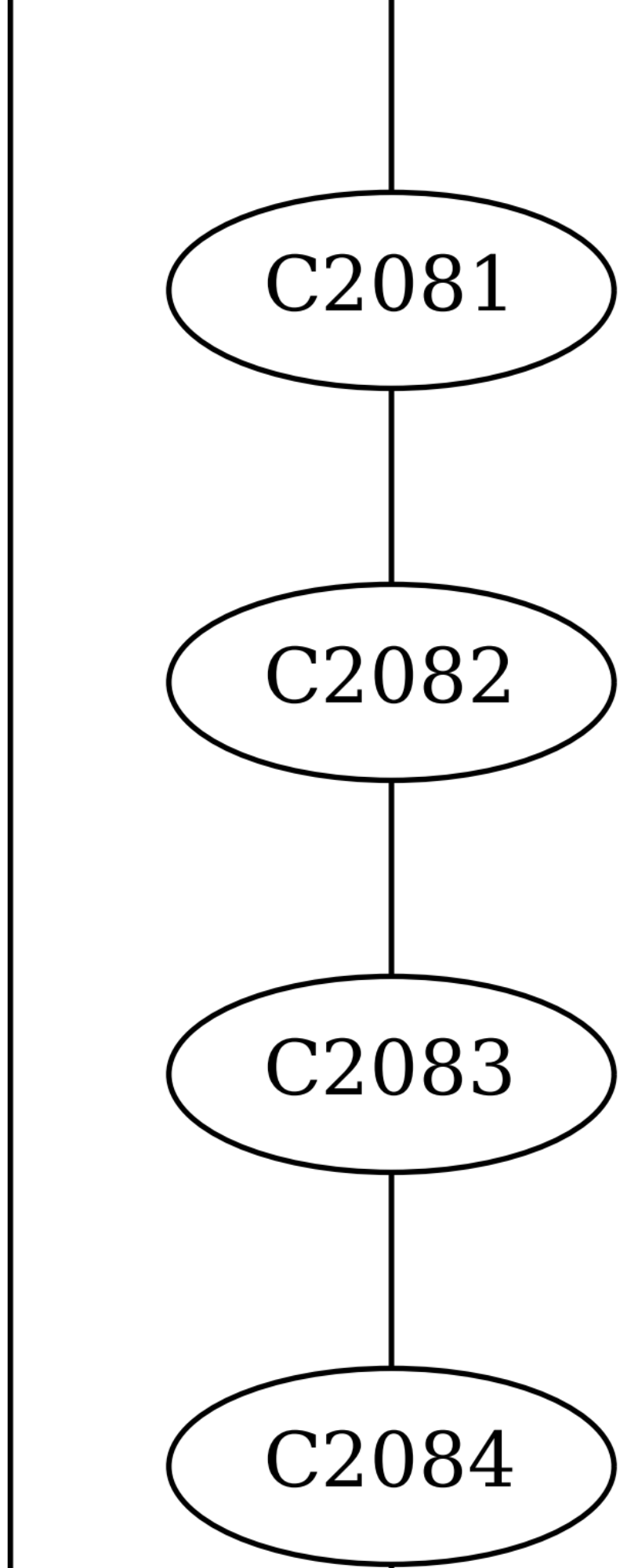
C2081
C2082
C2083
C2084

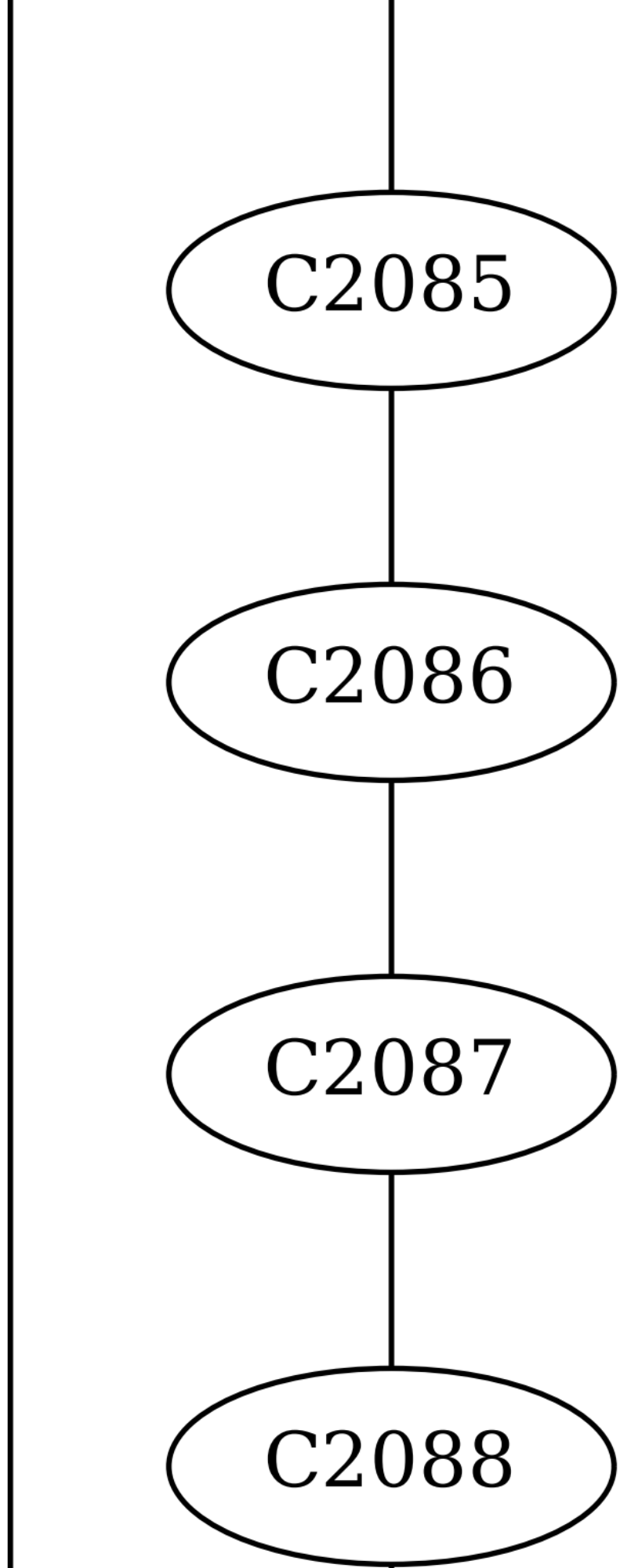
C2085
C2086
C2087
C2088

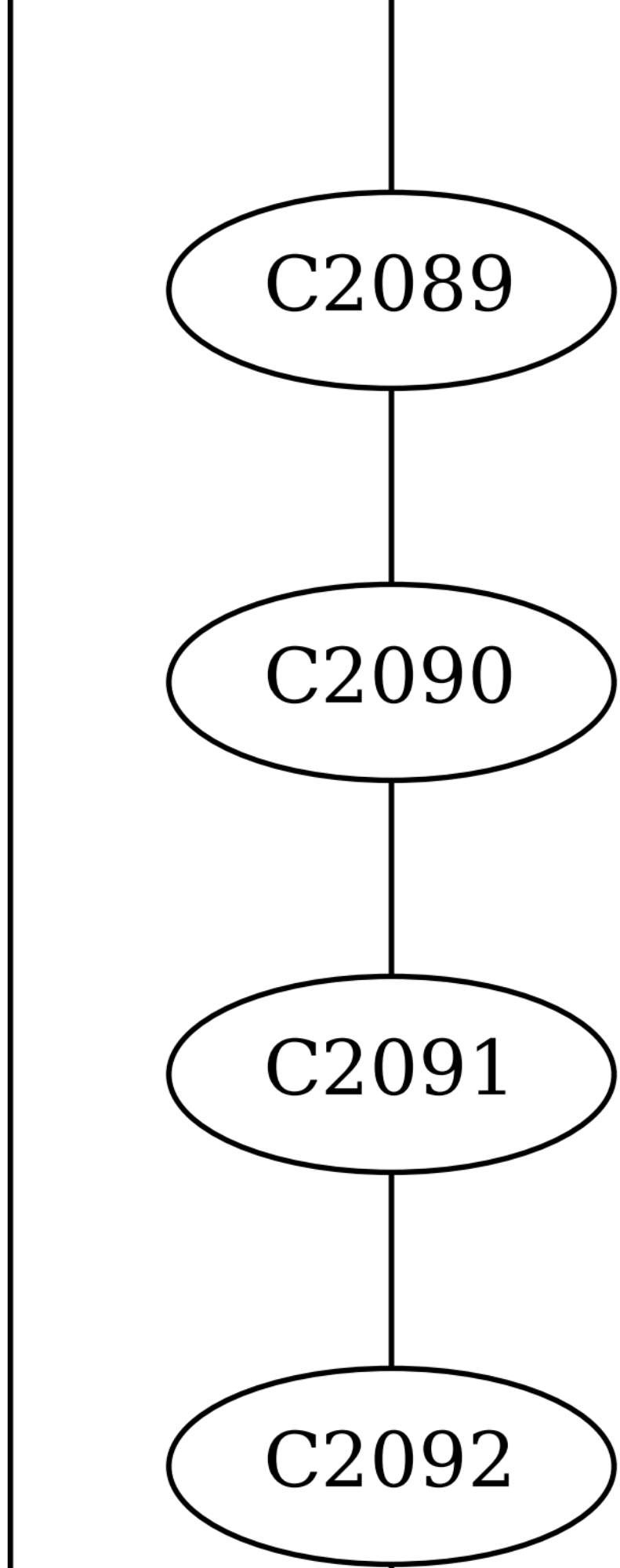
C2089
C2090
C2091
C2092

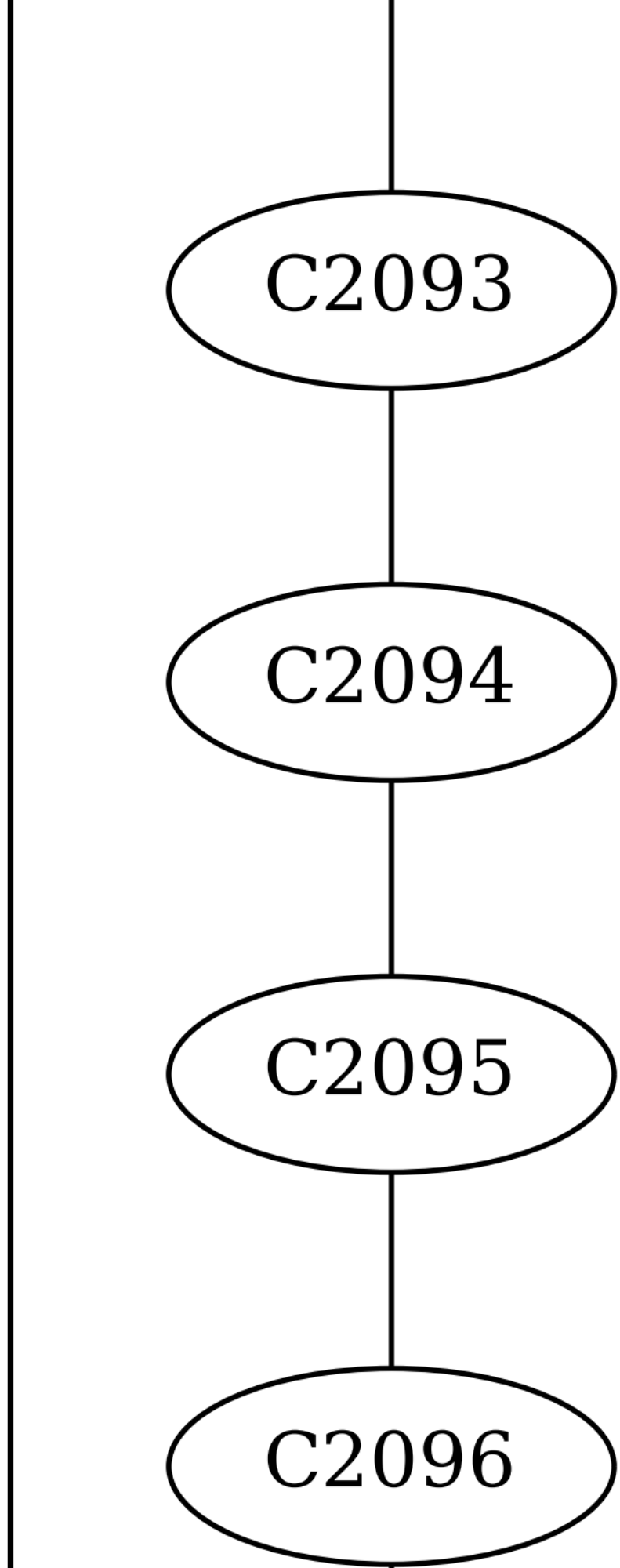
C2093
C2094
C2095
C2096

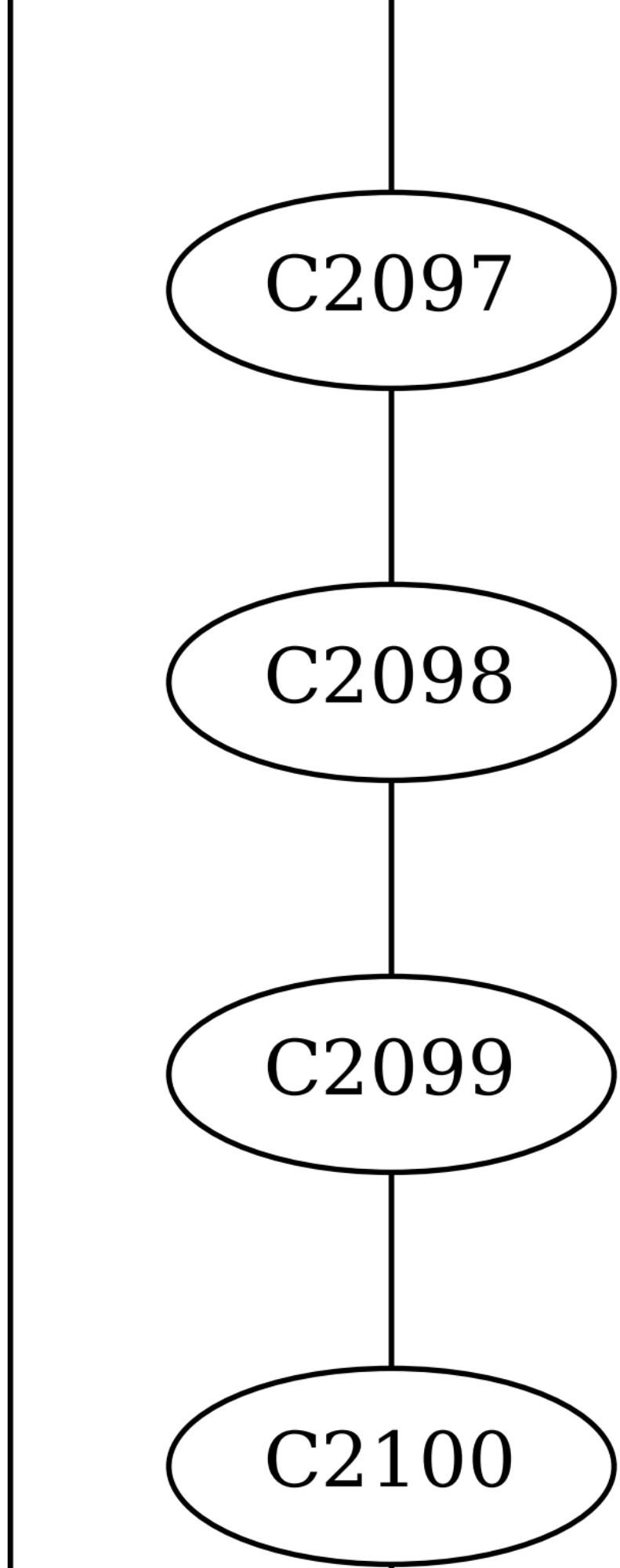
C2097
C2098
C2099
C2100

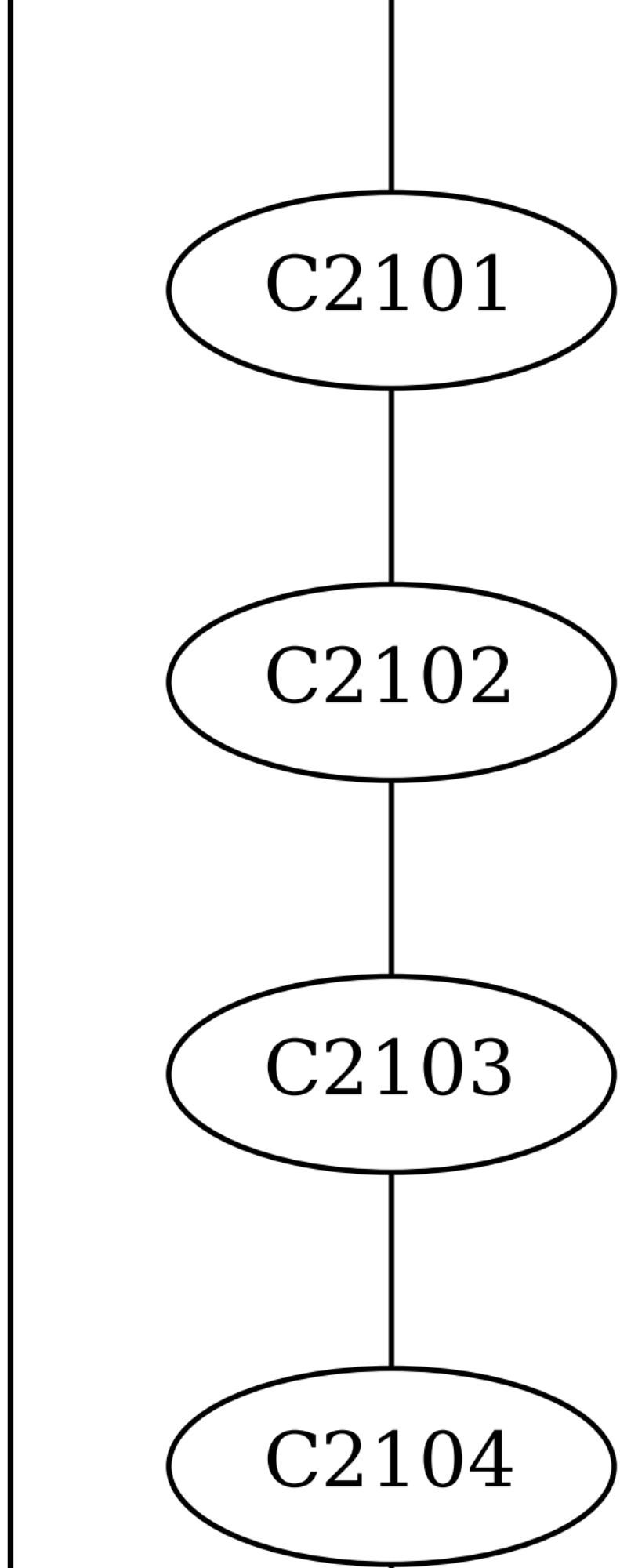
C2101
C2102
C2103
C2104

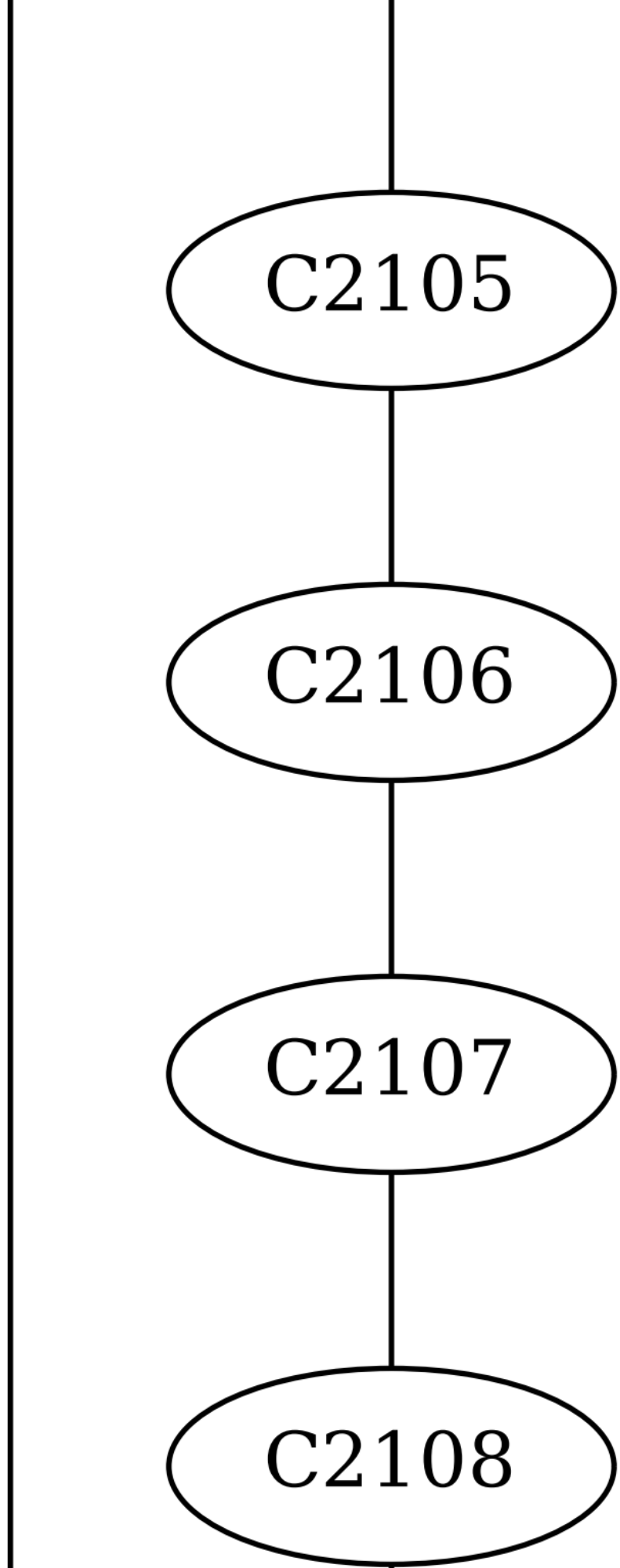
C2105
C2106
C2107
C2108

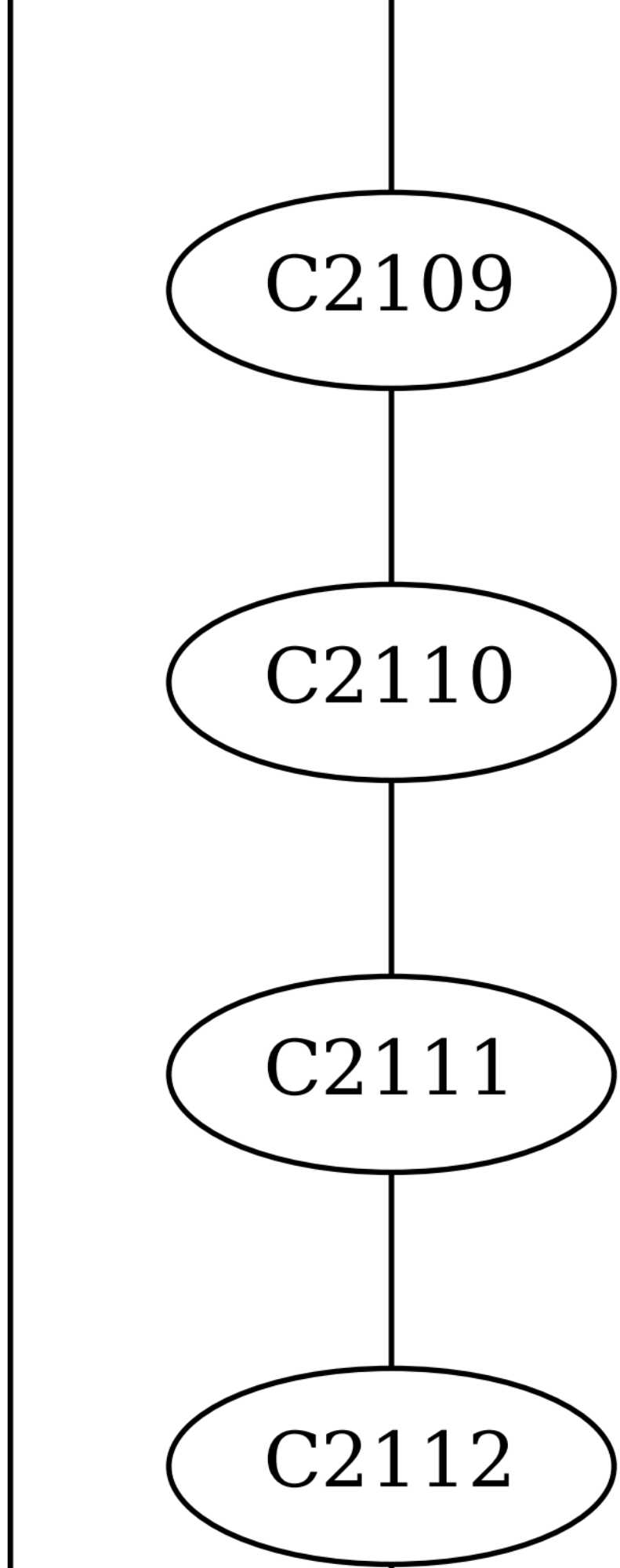
C2109
C2110
C2111
C2112

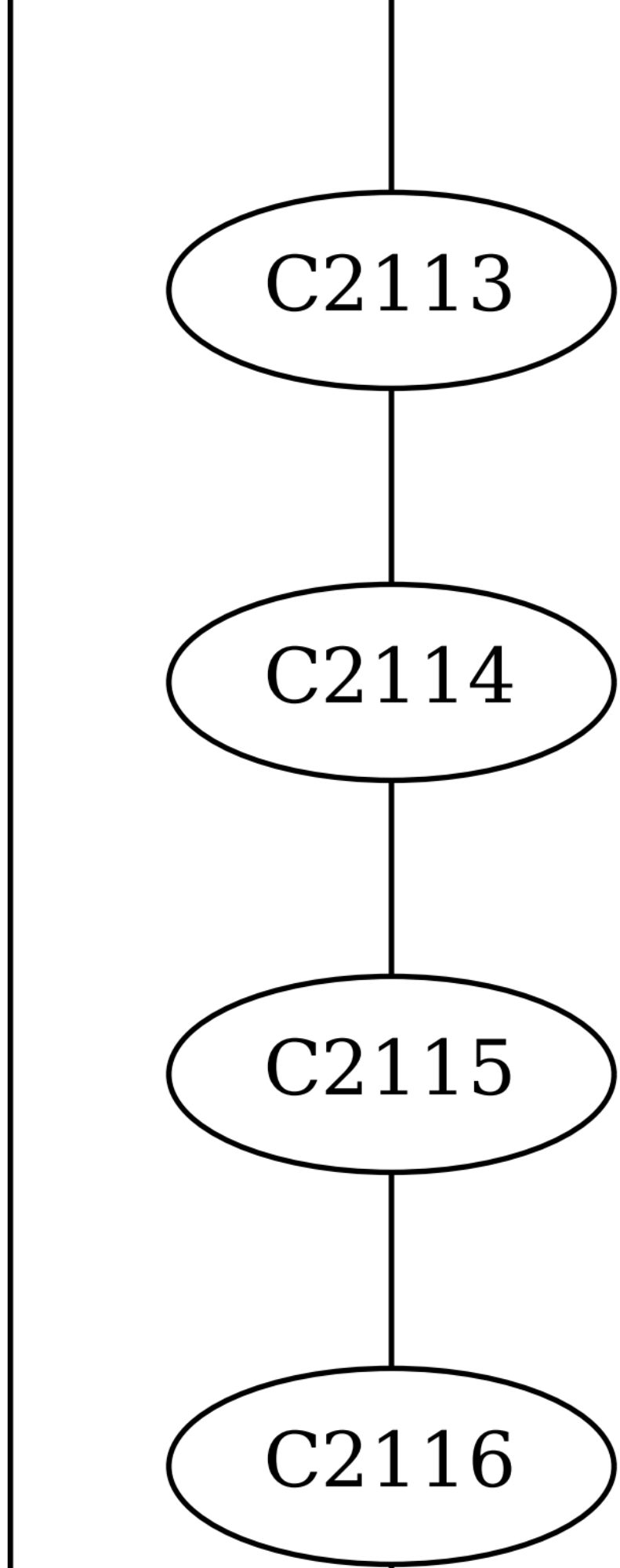
C2113
C2114
C2115
C2116

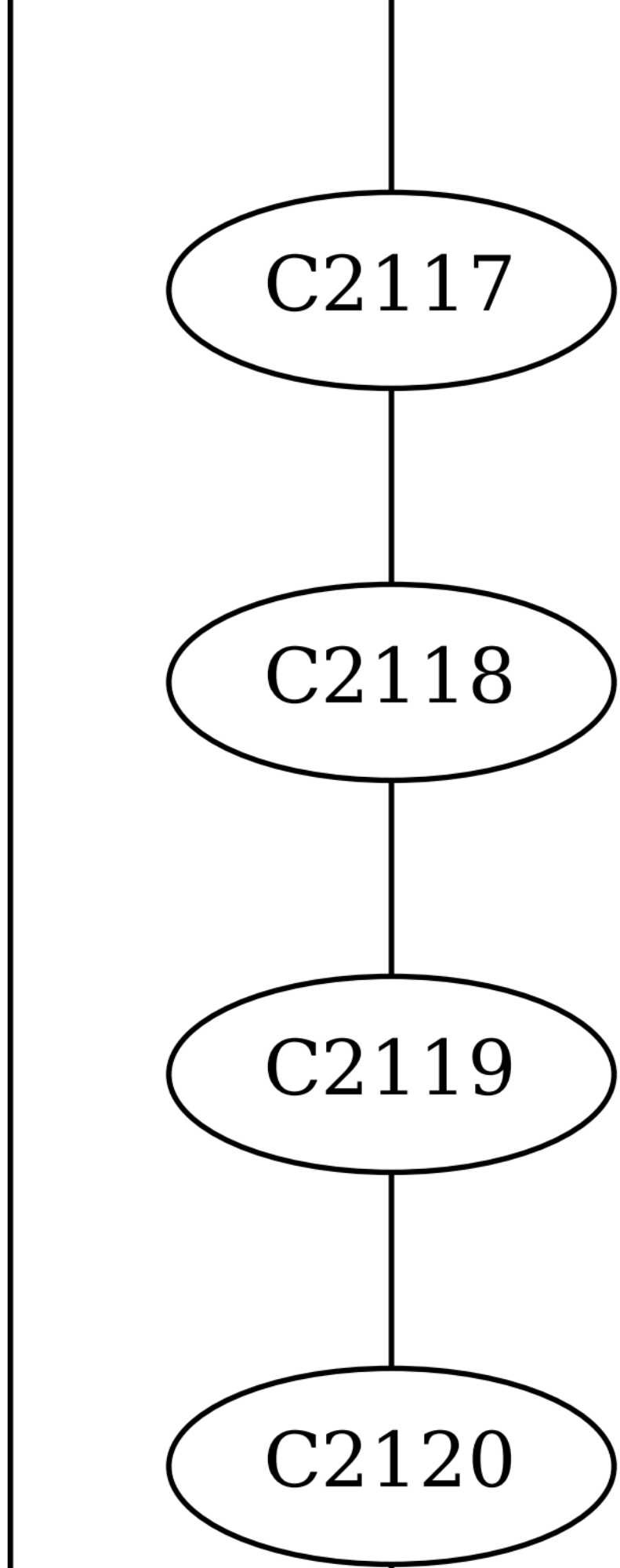
C2117
C2118
C2119
C2120

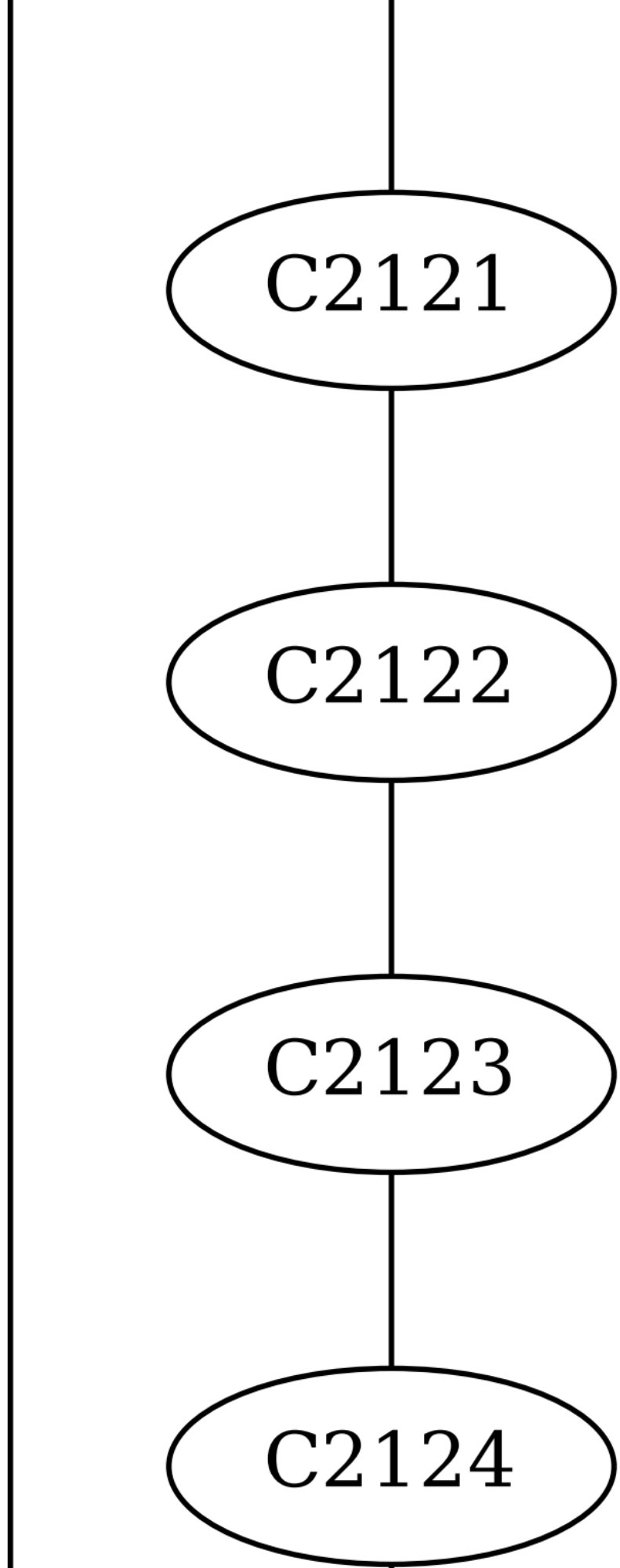
C2121
C2122
C2123
C2124

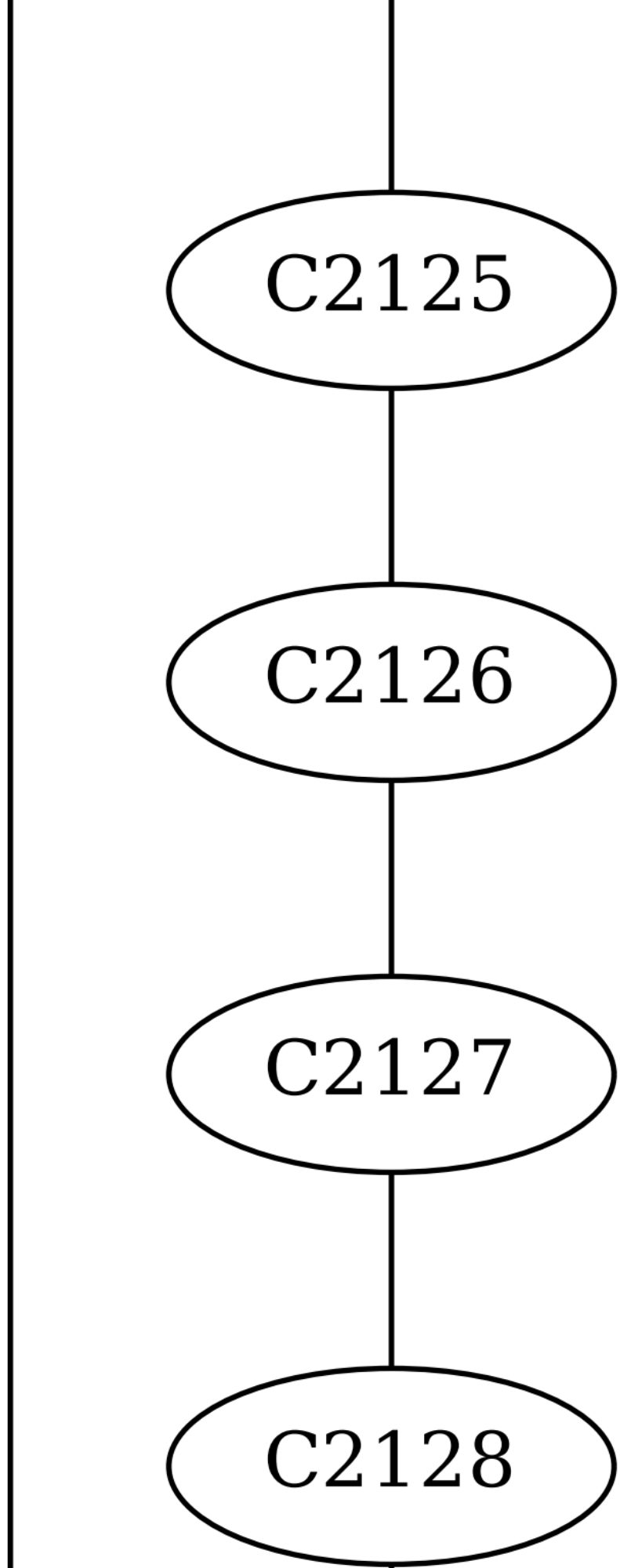
C2125
C2126
C2127
C2128

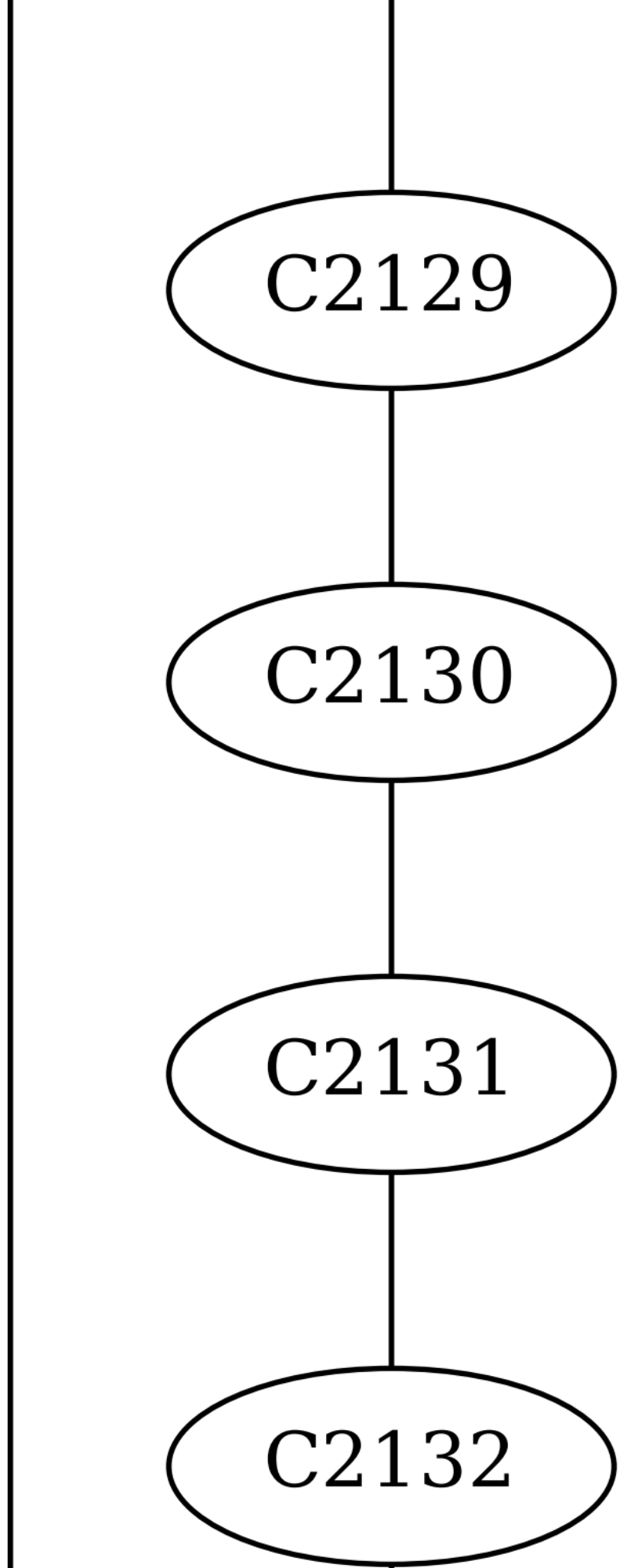
C2129
C2130
C2131
C2132

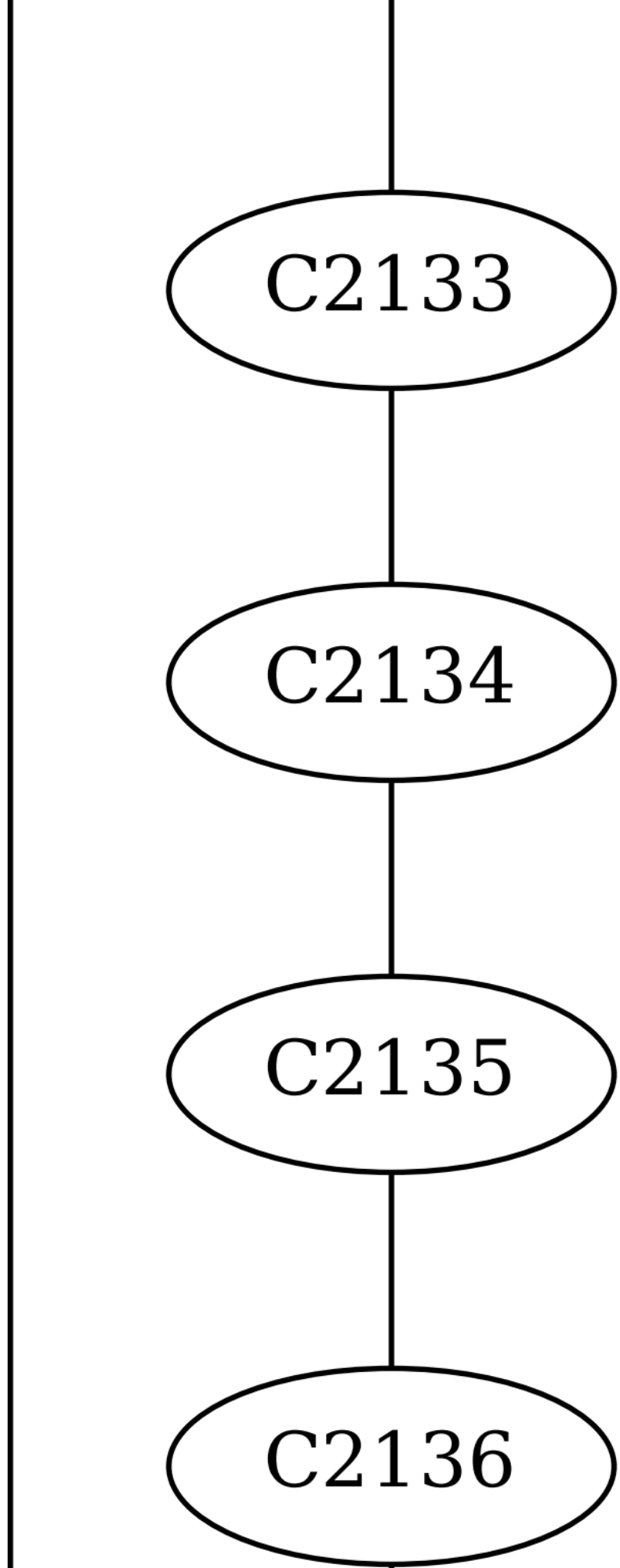
C2133
C2134
C2135
C2136

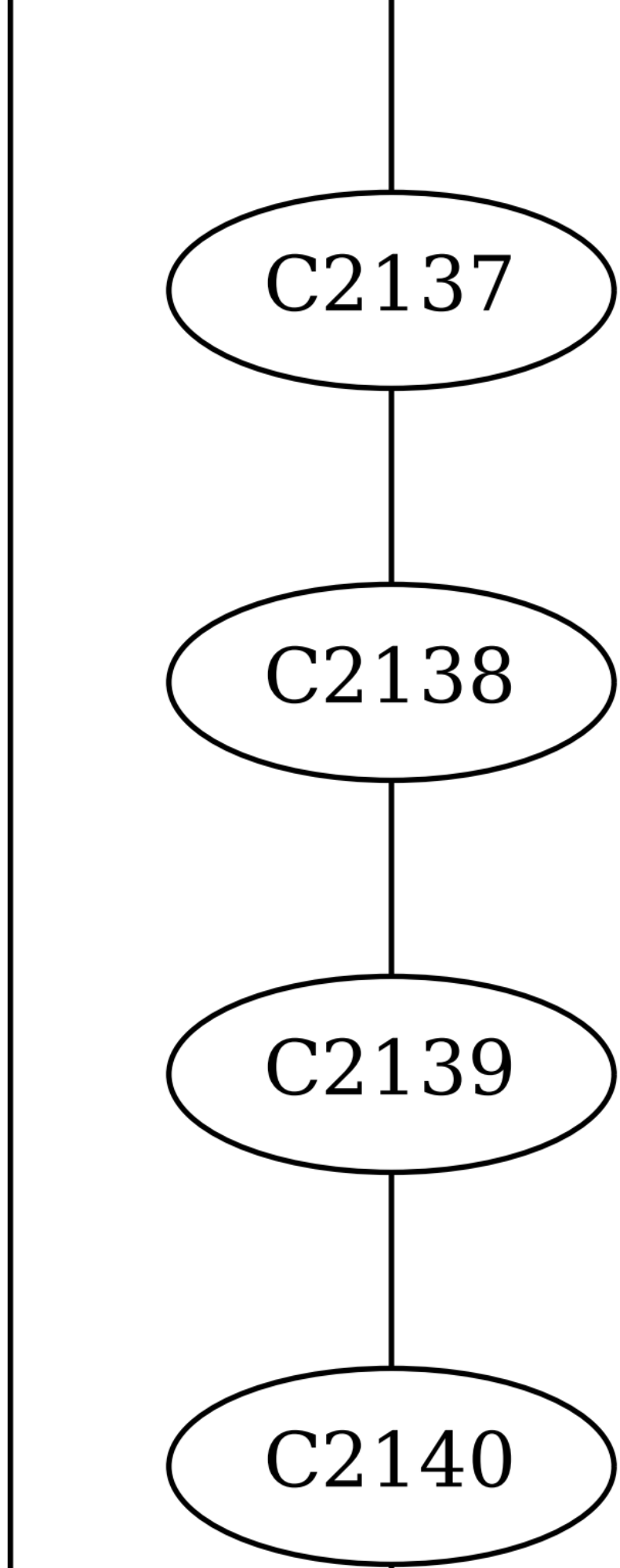
C2137
C2138
C2139
C2140

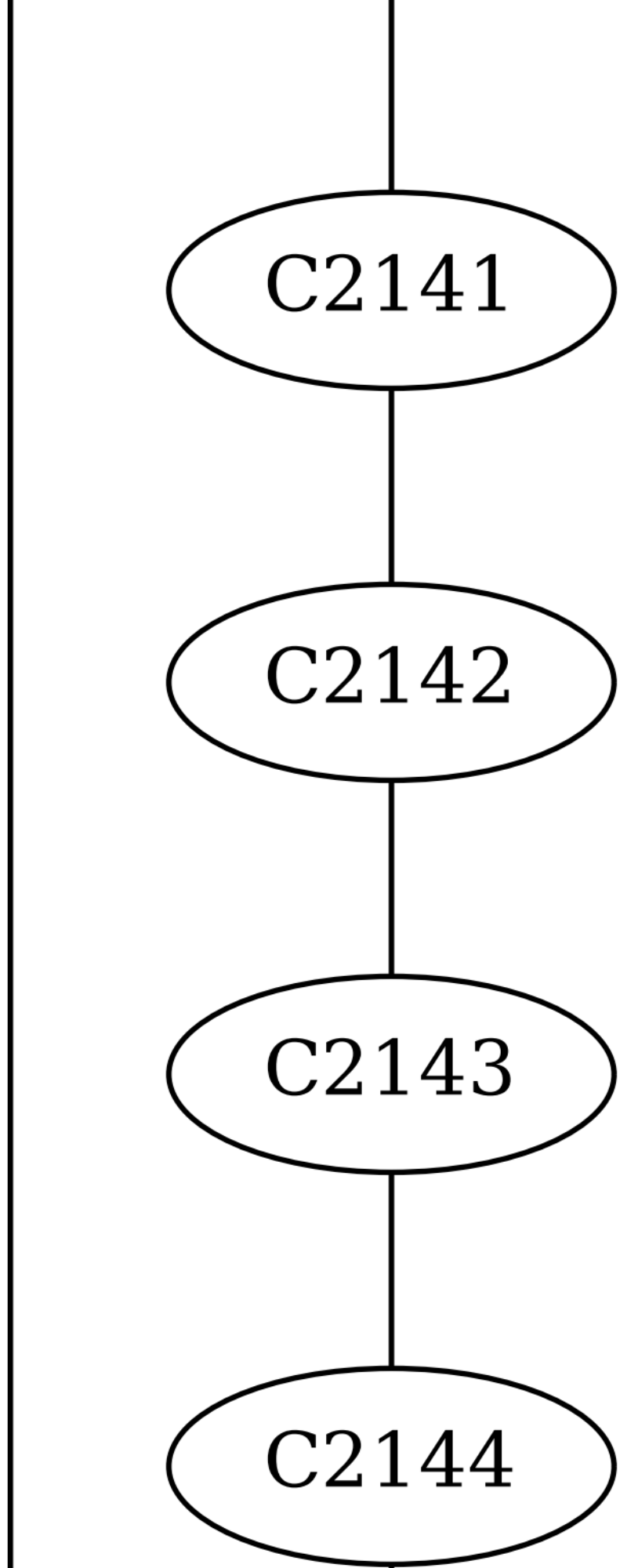
C2141
C2142
C2143
C2144

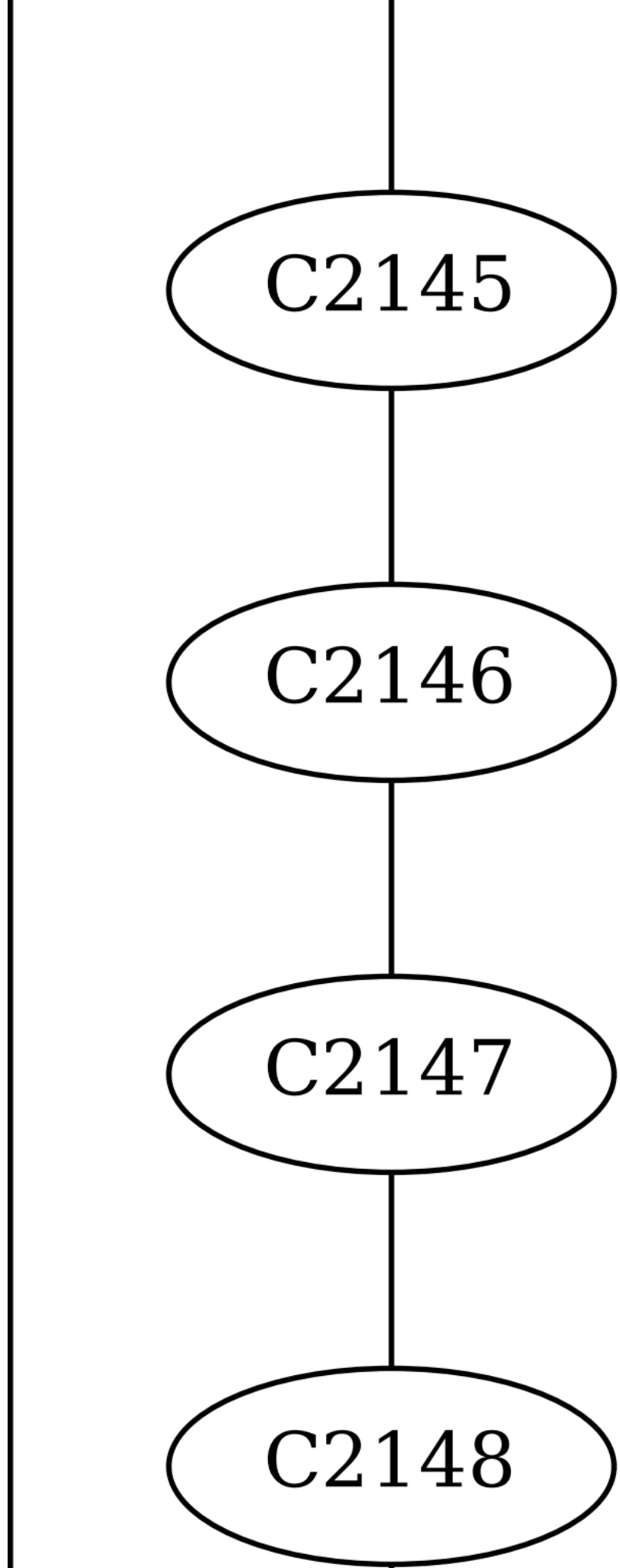
C2145
C2146
C2147
C2148

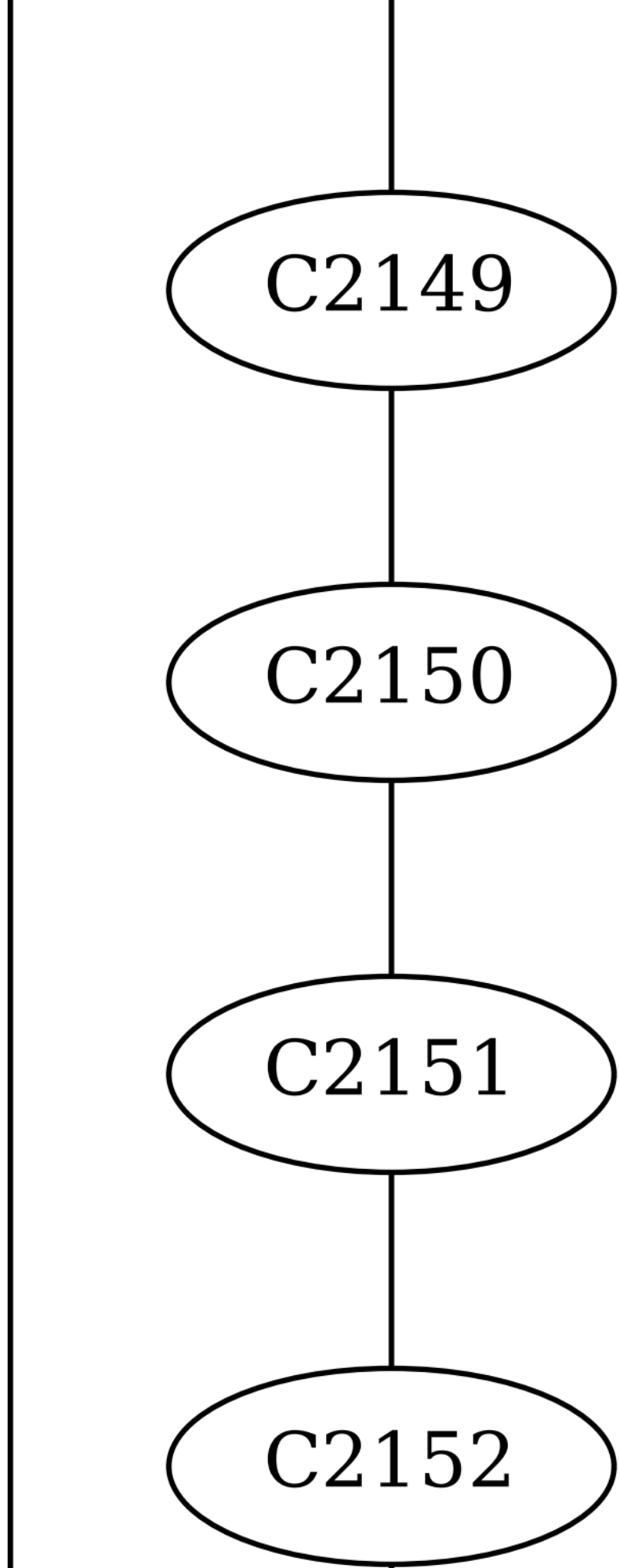
C2149
C2150
C2151
C2152

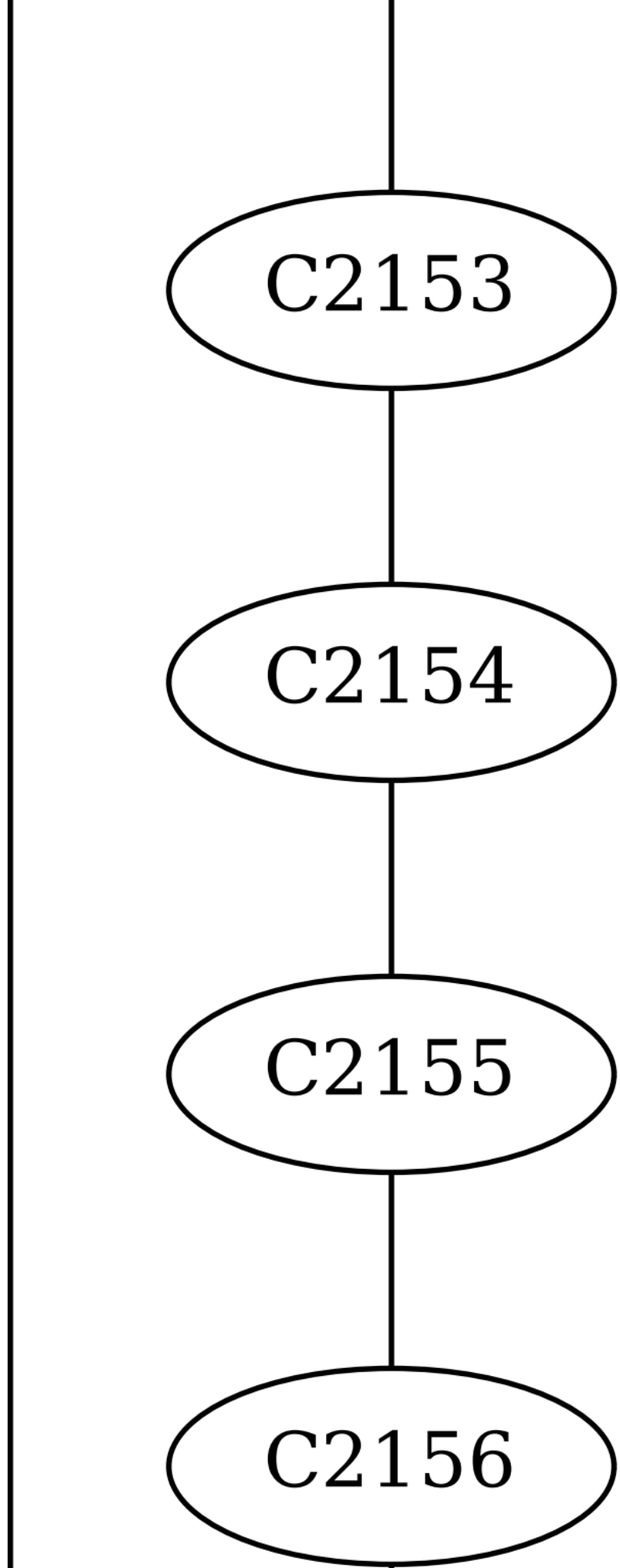
C2153
C2154
C2155
C2156

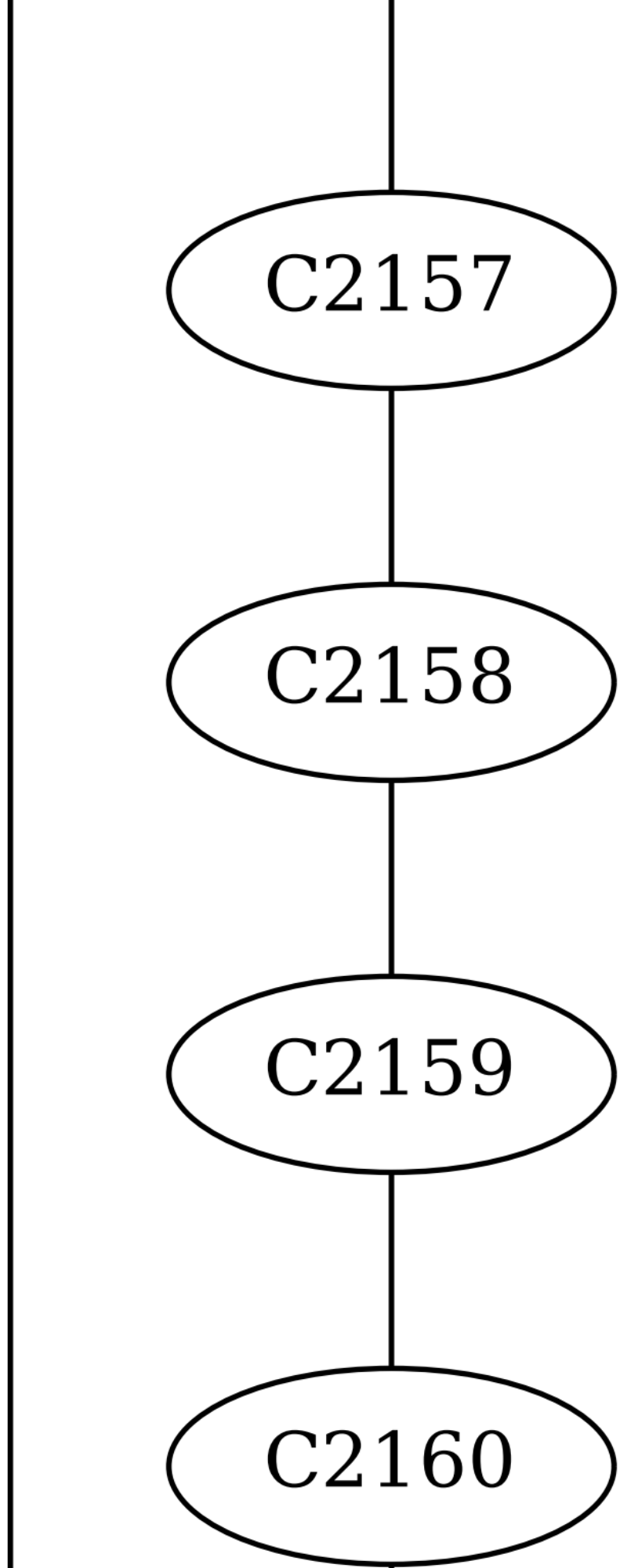
C2157
C2158
C2159
C2160

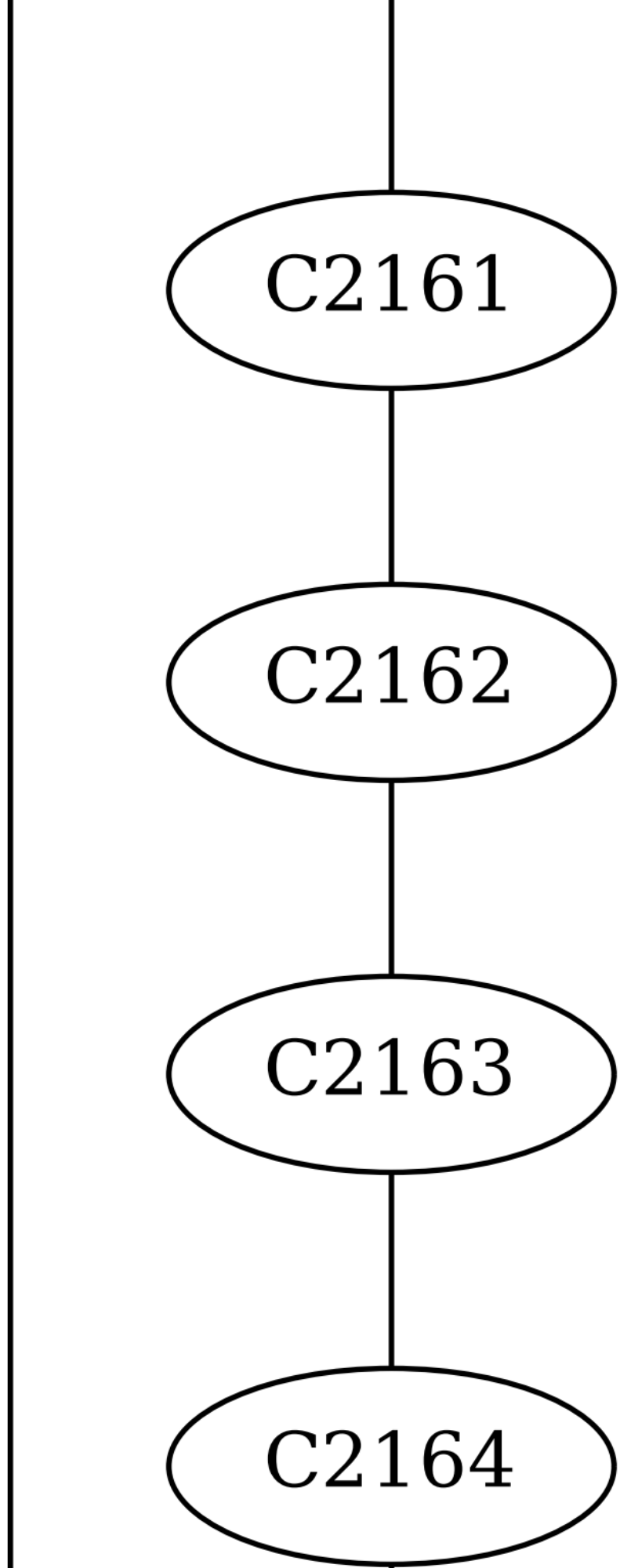
C2161
C2162
C2163
C2164

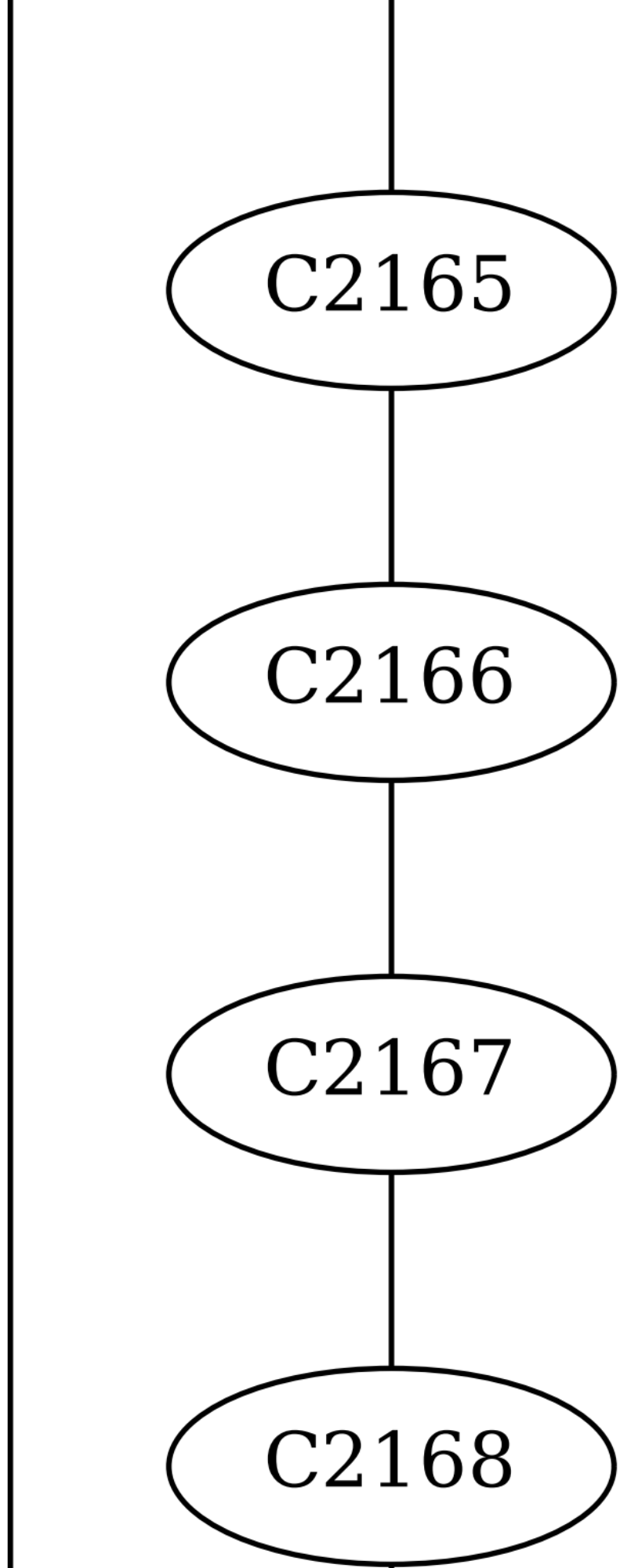
C2165
C2166
C2167
C2168

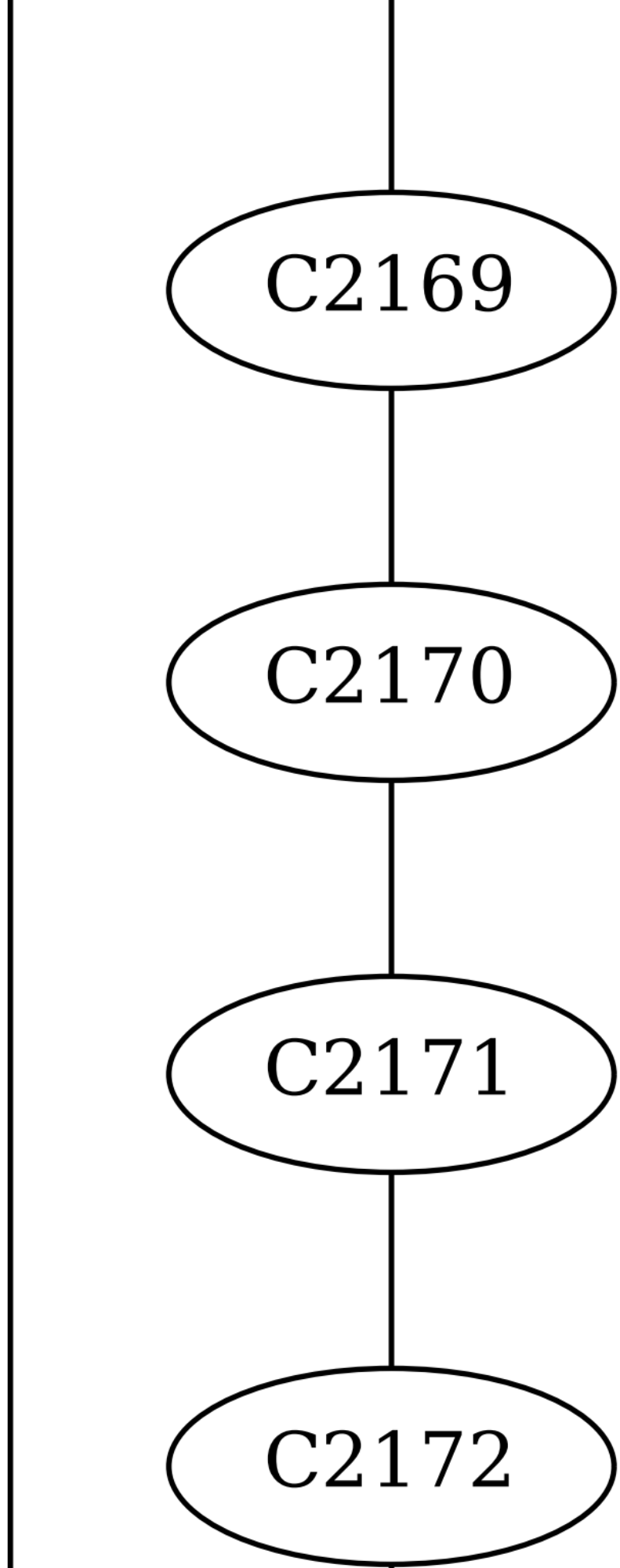
C2169
C2170
C2171
C2172

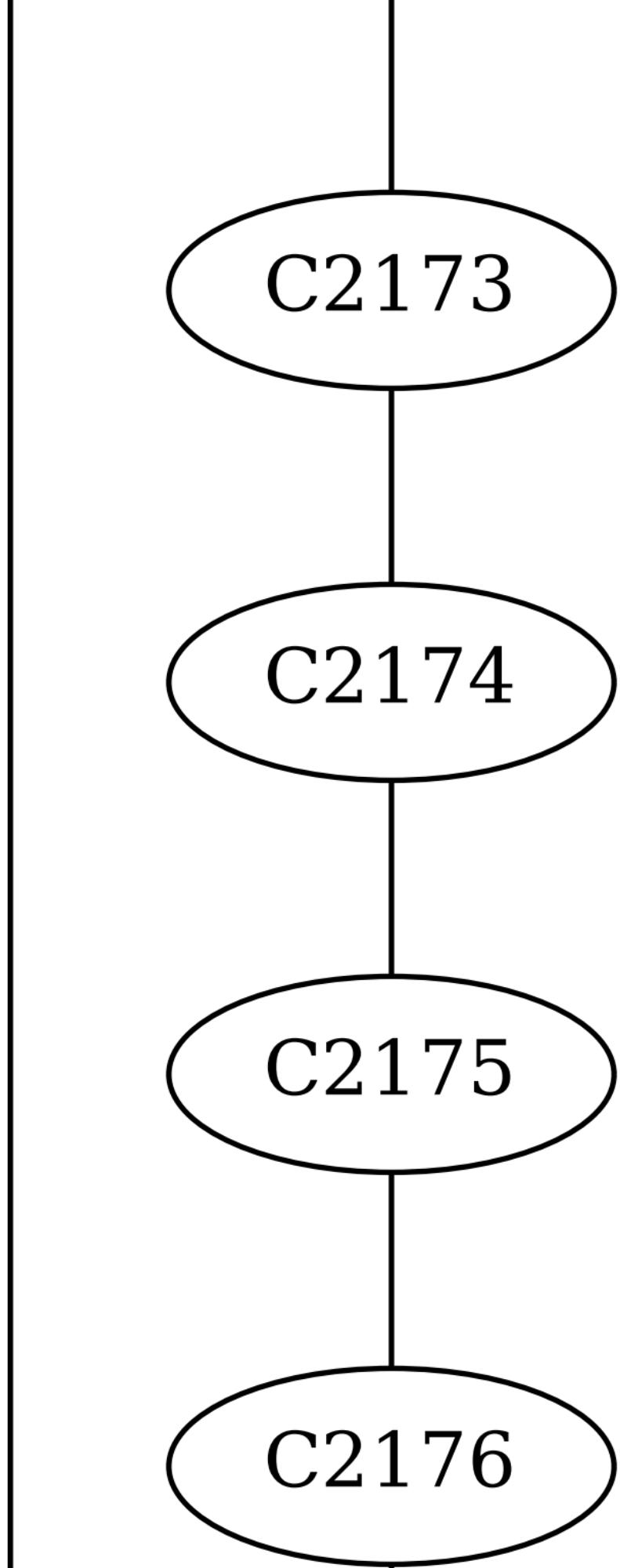
C2173
C2174
C2175
C2176

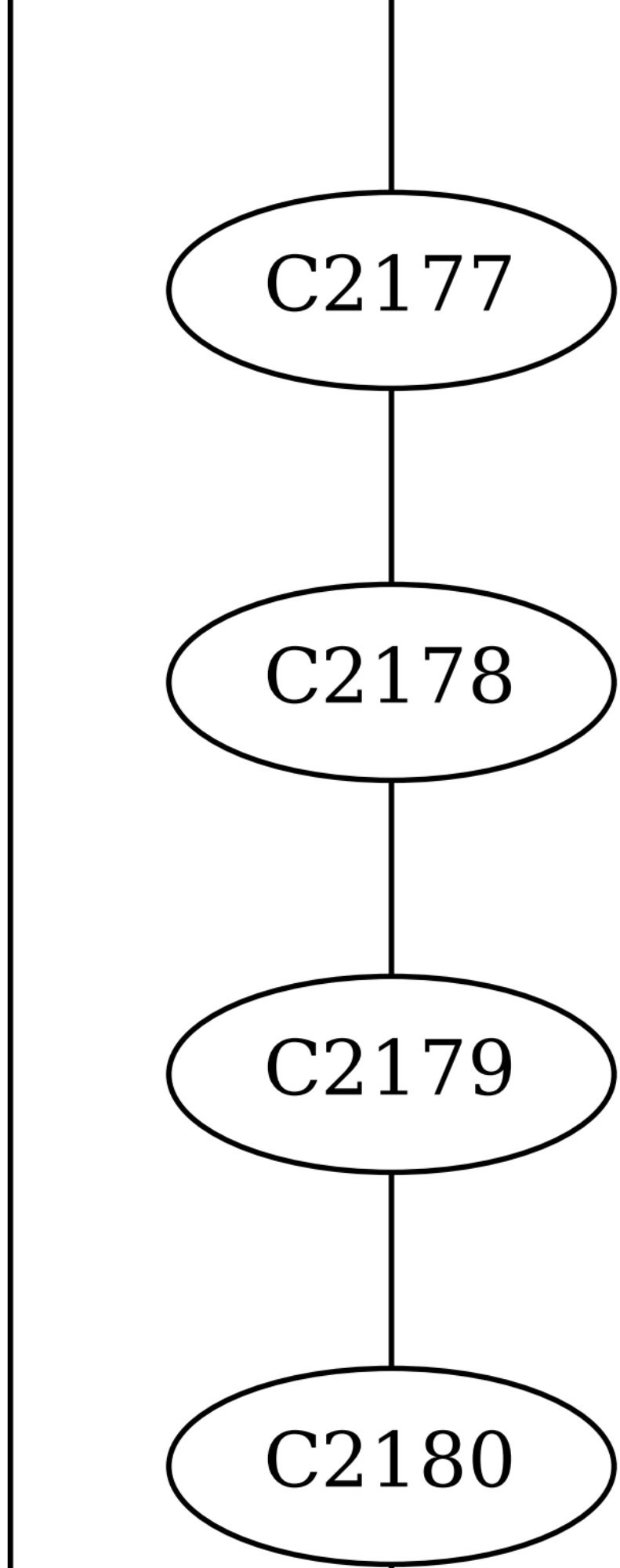
C2177
C2178
C2179
C2180

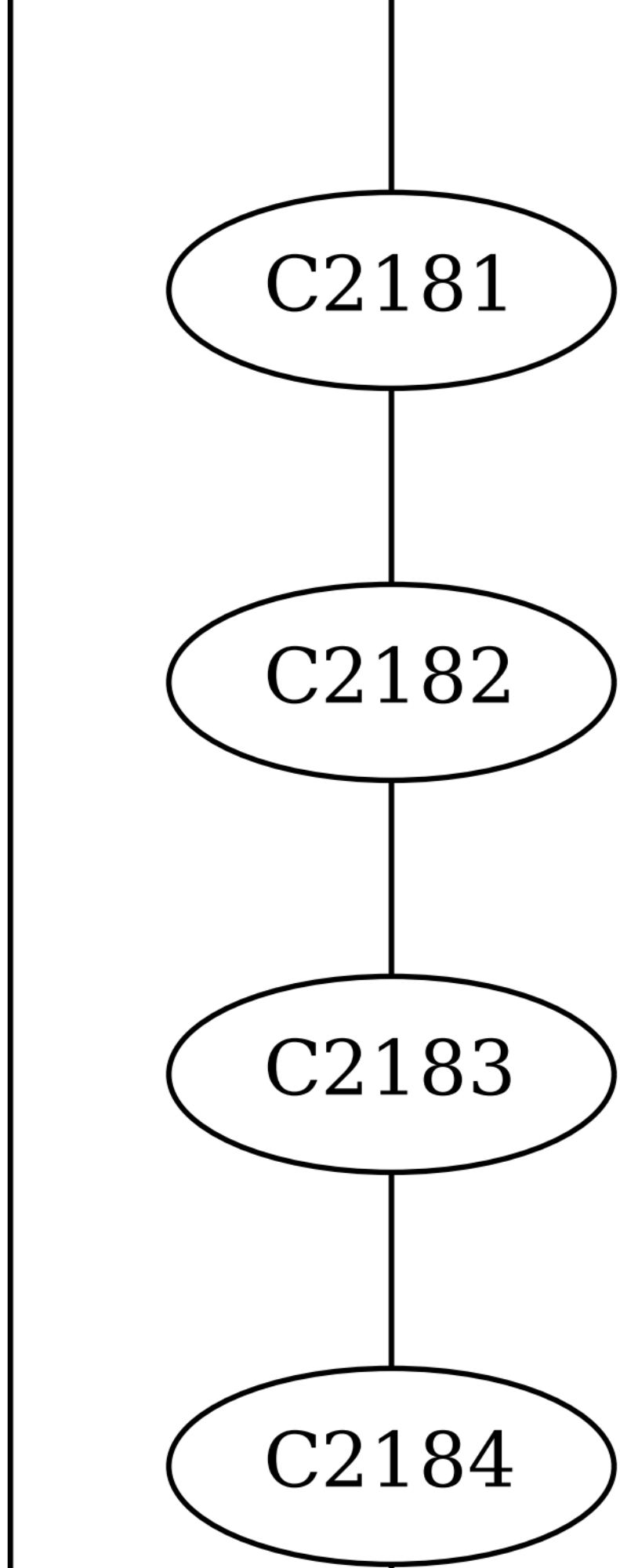
C2181
C2182
C2183
C2184

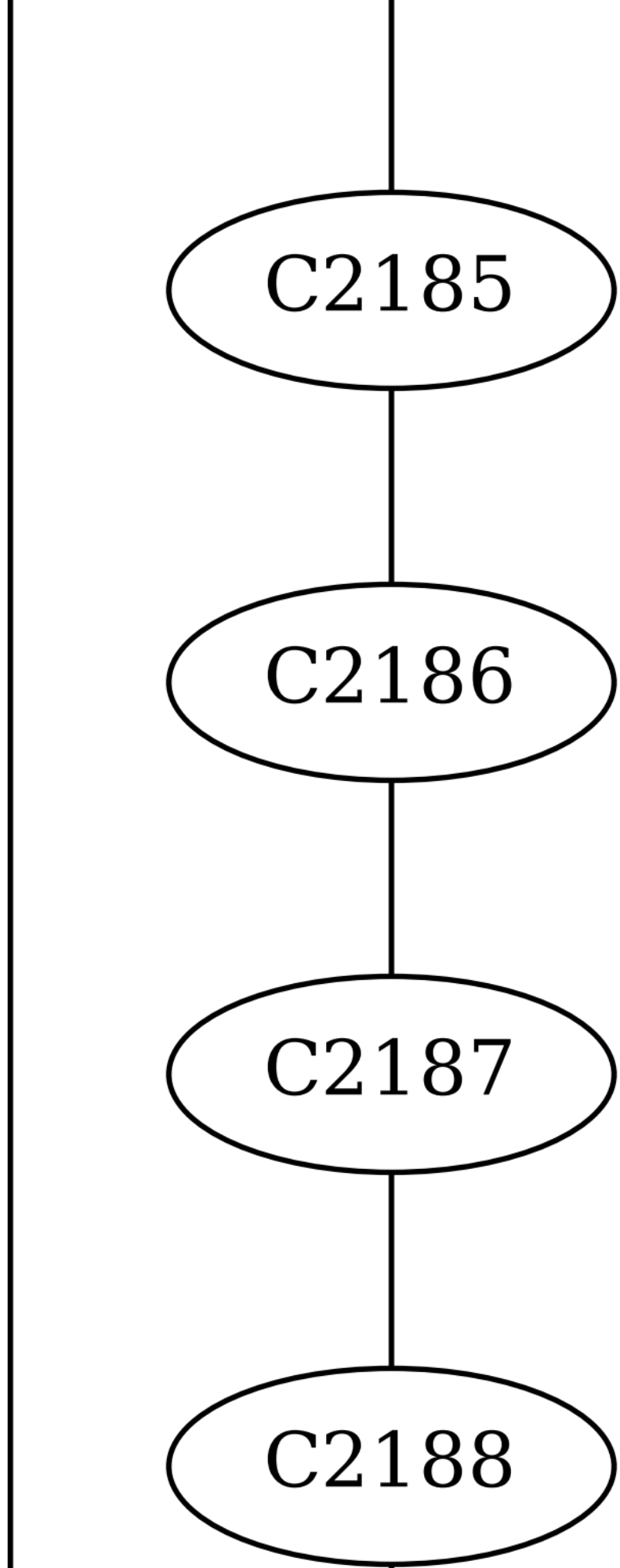
C2185
C2186
C2187
C2188

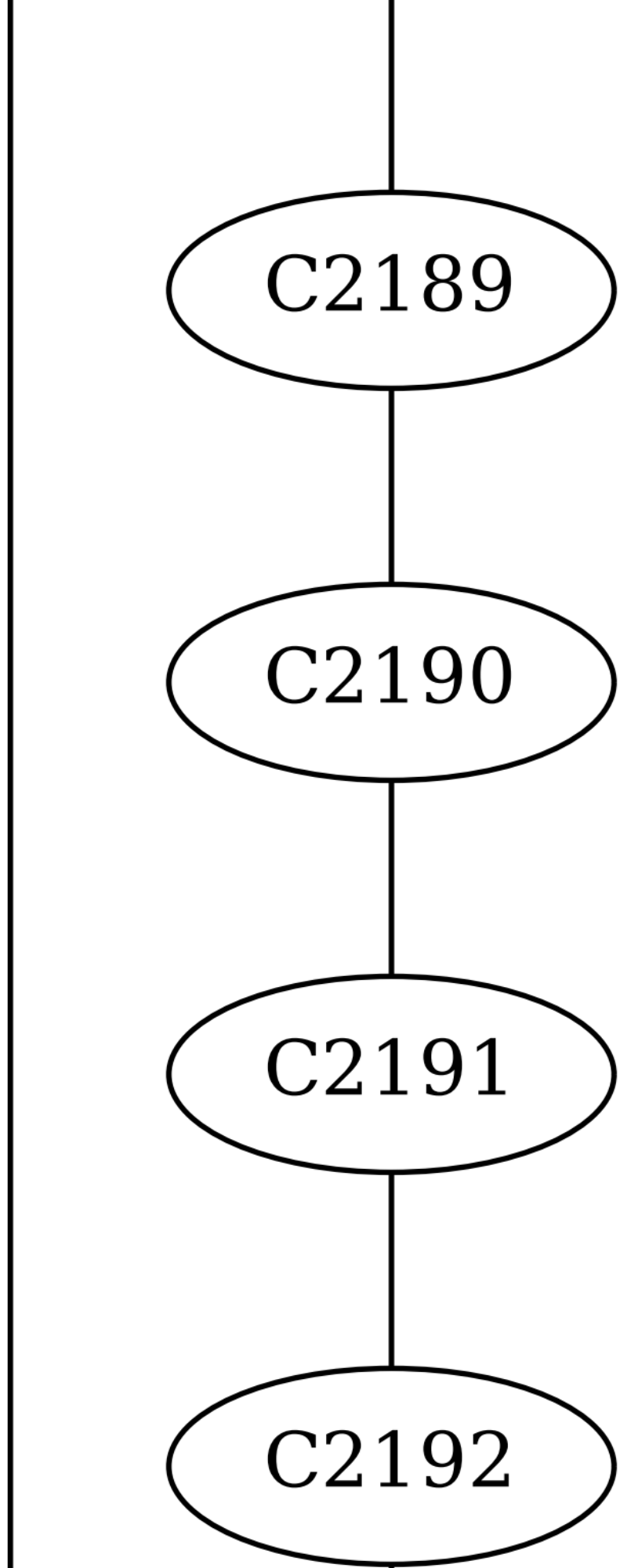
C2189
C2190
C2191
C2192

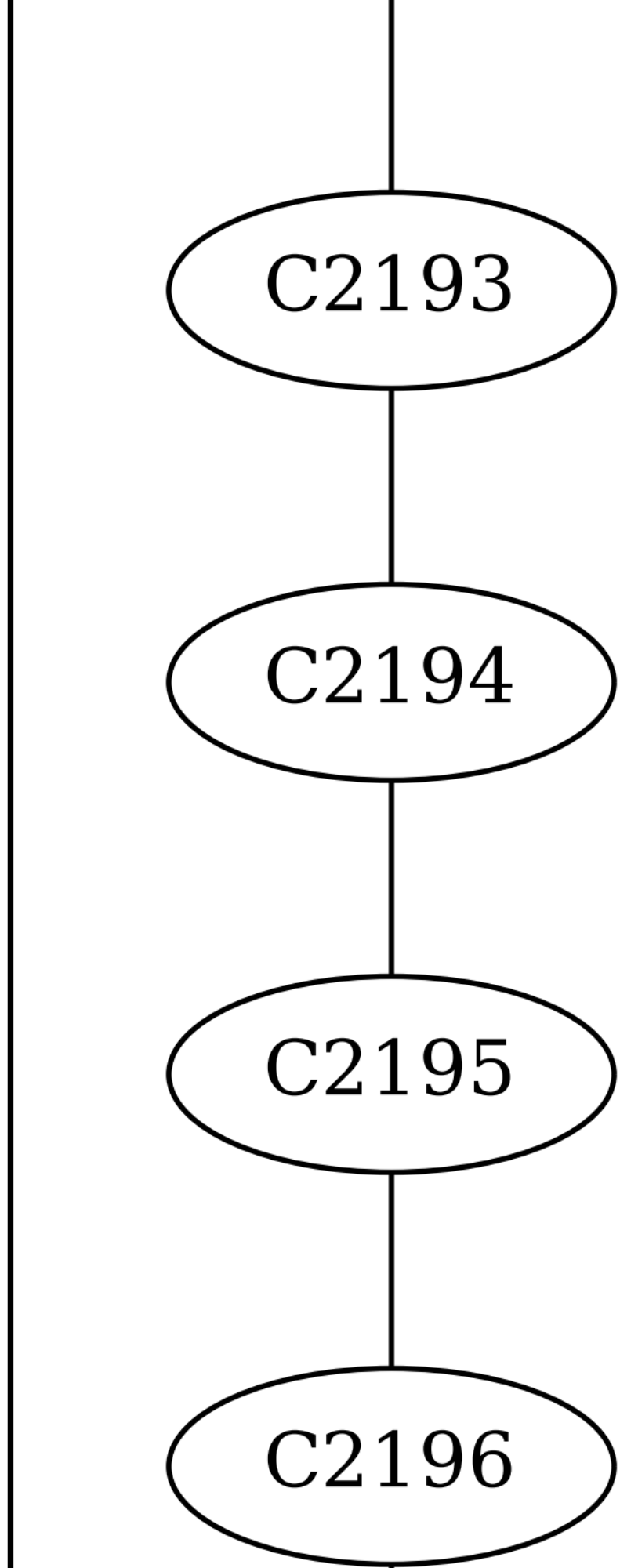
C2193
C2194
C2195
C2196

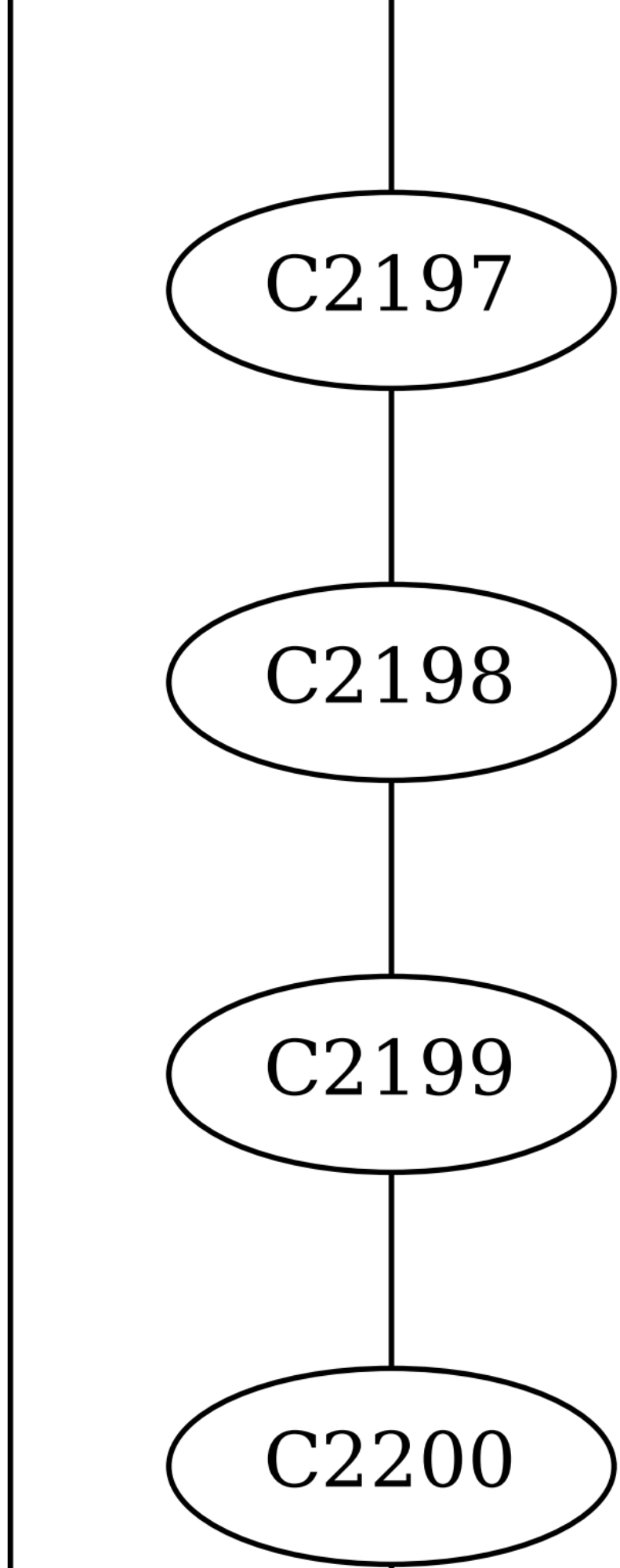
C2197
C2198
C2199
C2200

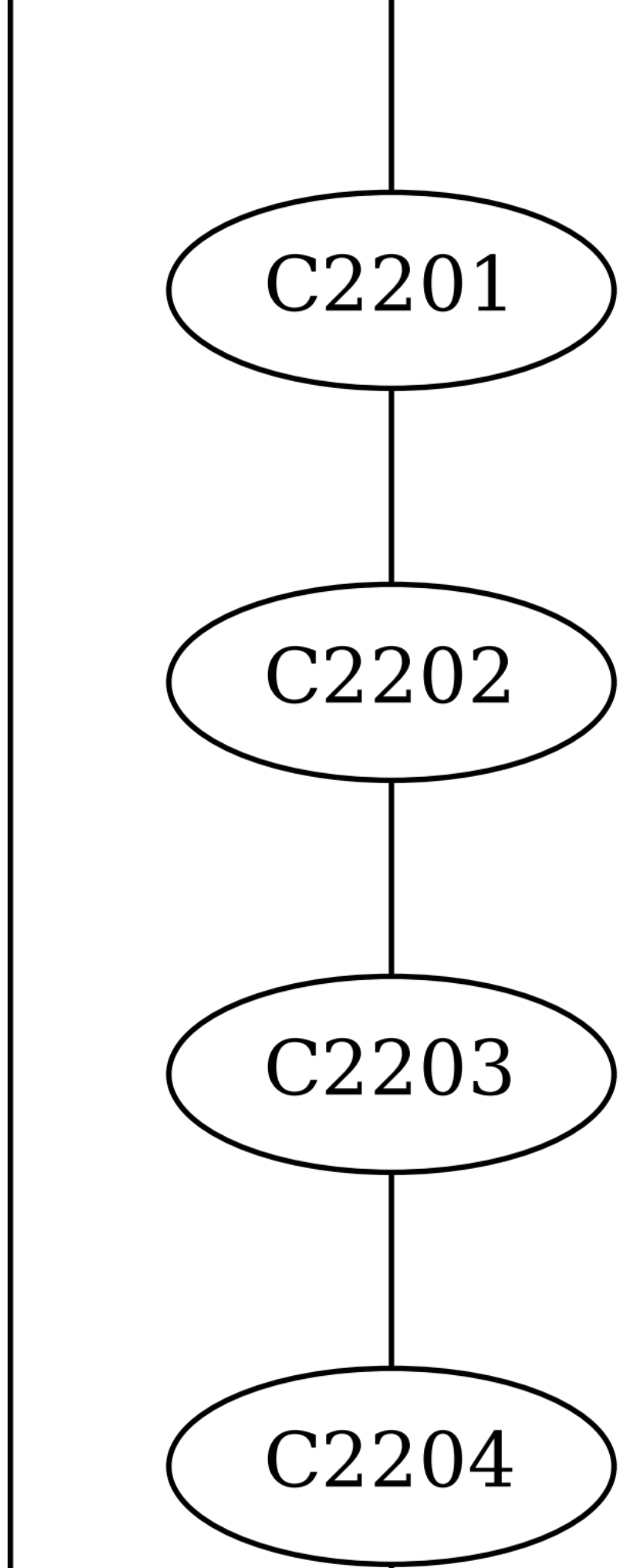
C2201
C2202
C2203
C2204

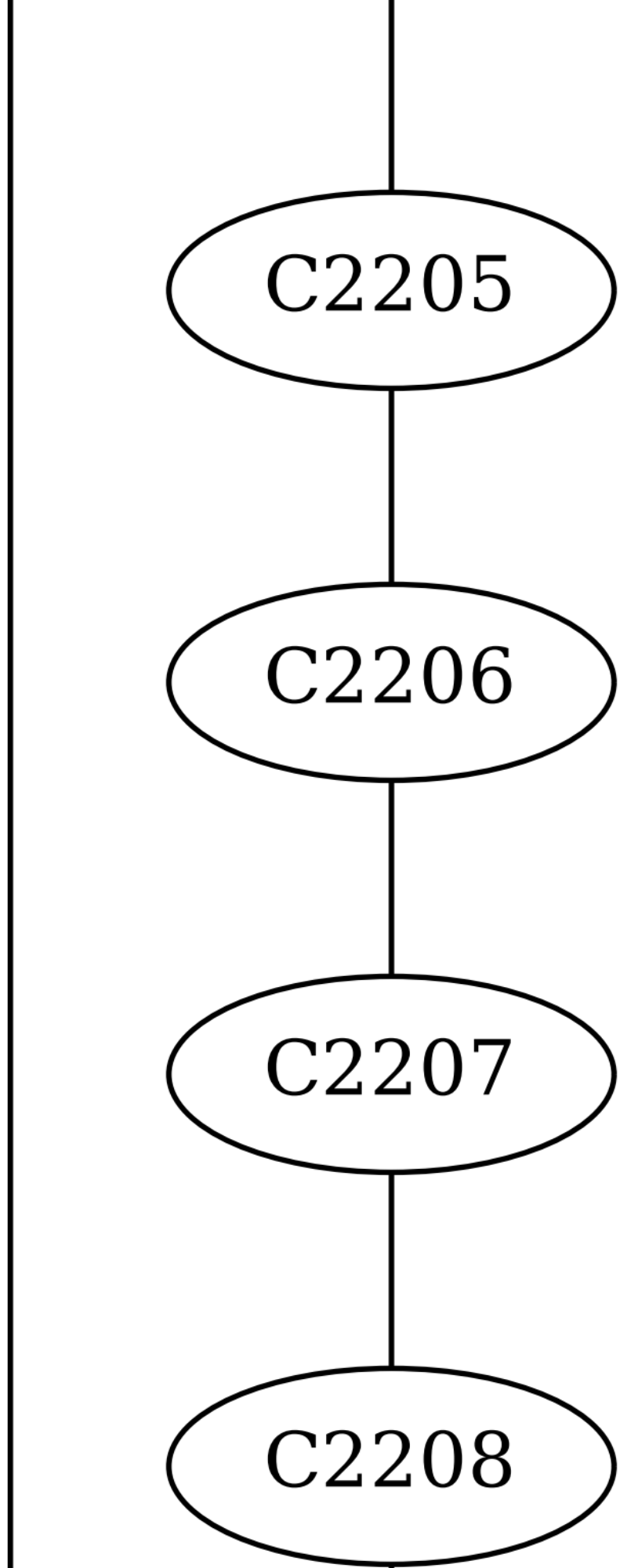
C2205
C2206
C2207
C2208

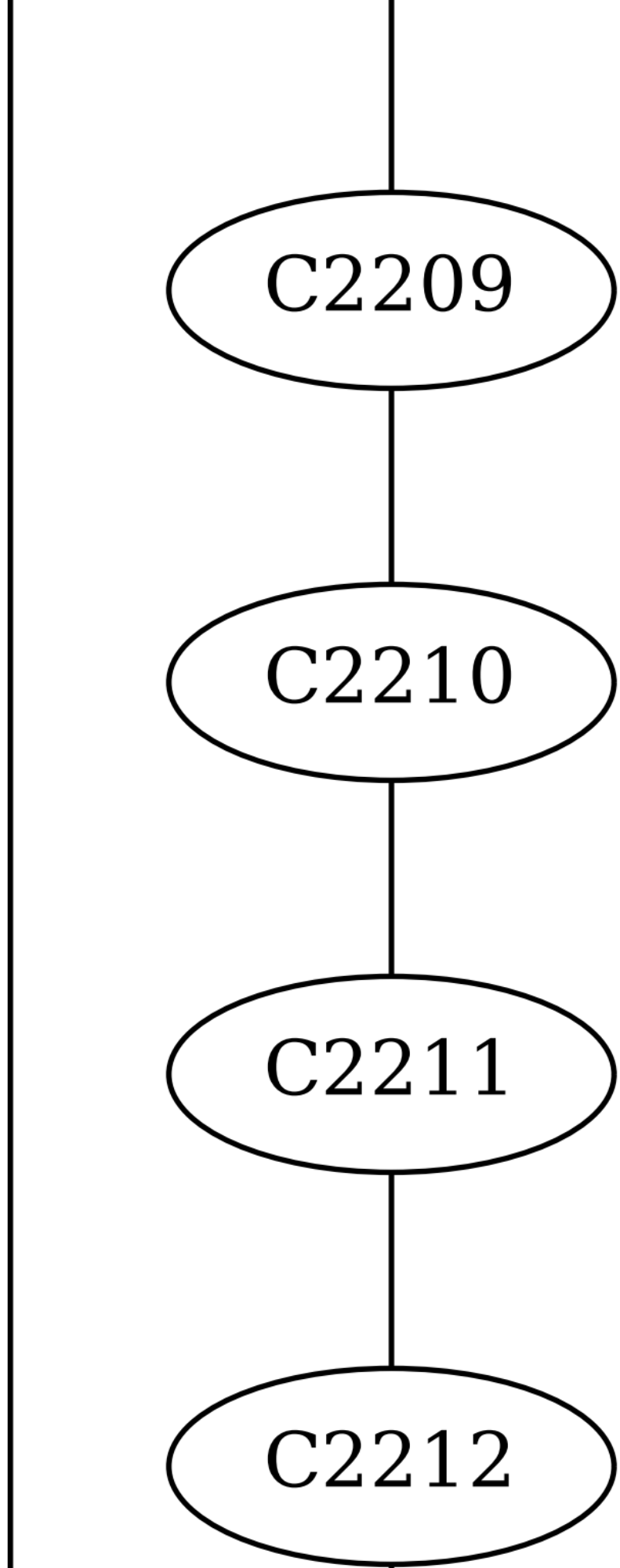
C2209
C2210
C2211
C2212

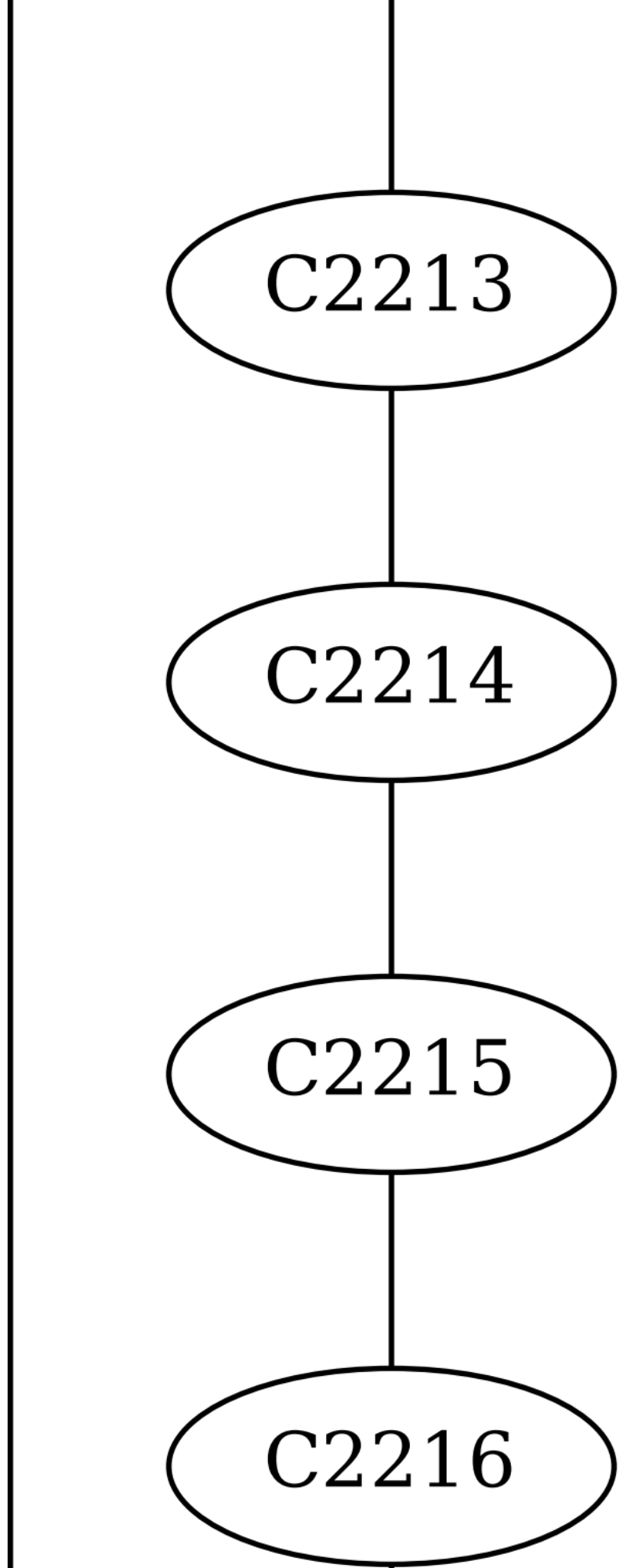
C2213
C2214
C2215
C2216

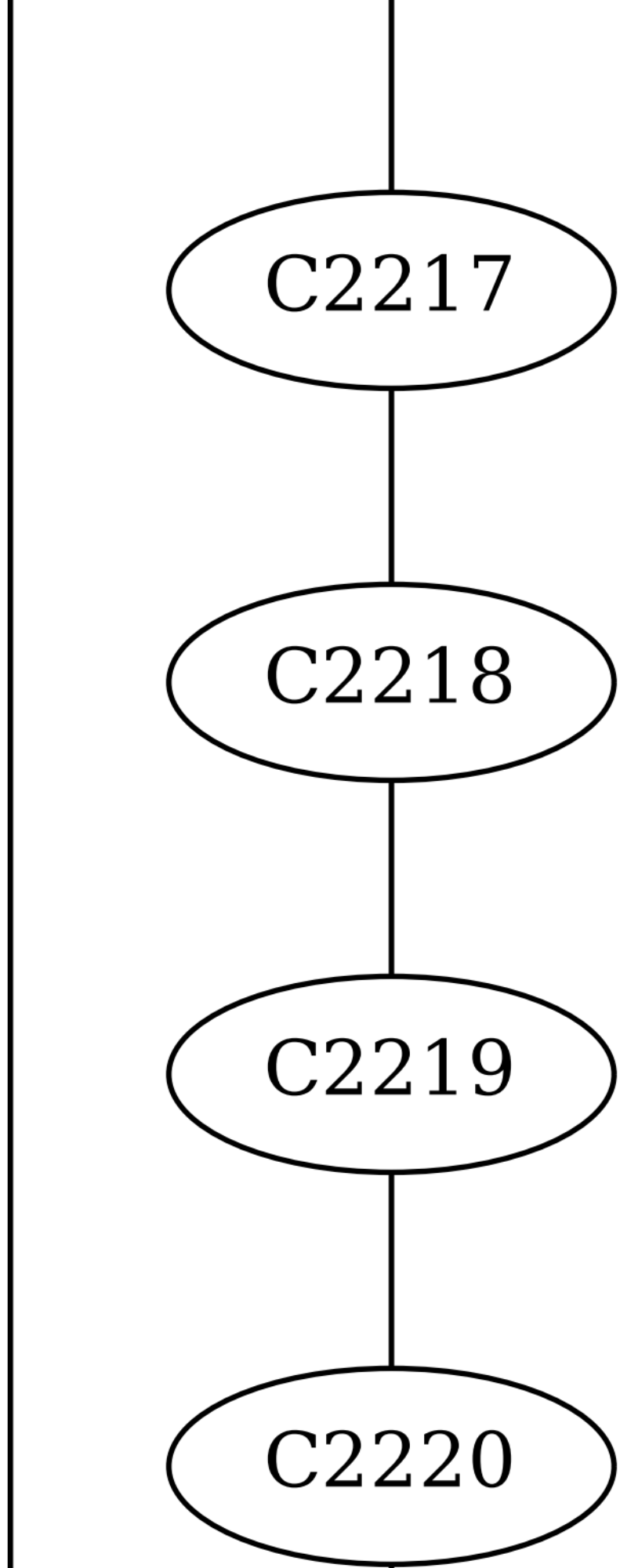
C2217
C2218
C2219
C2220

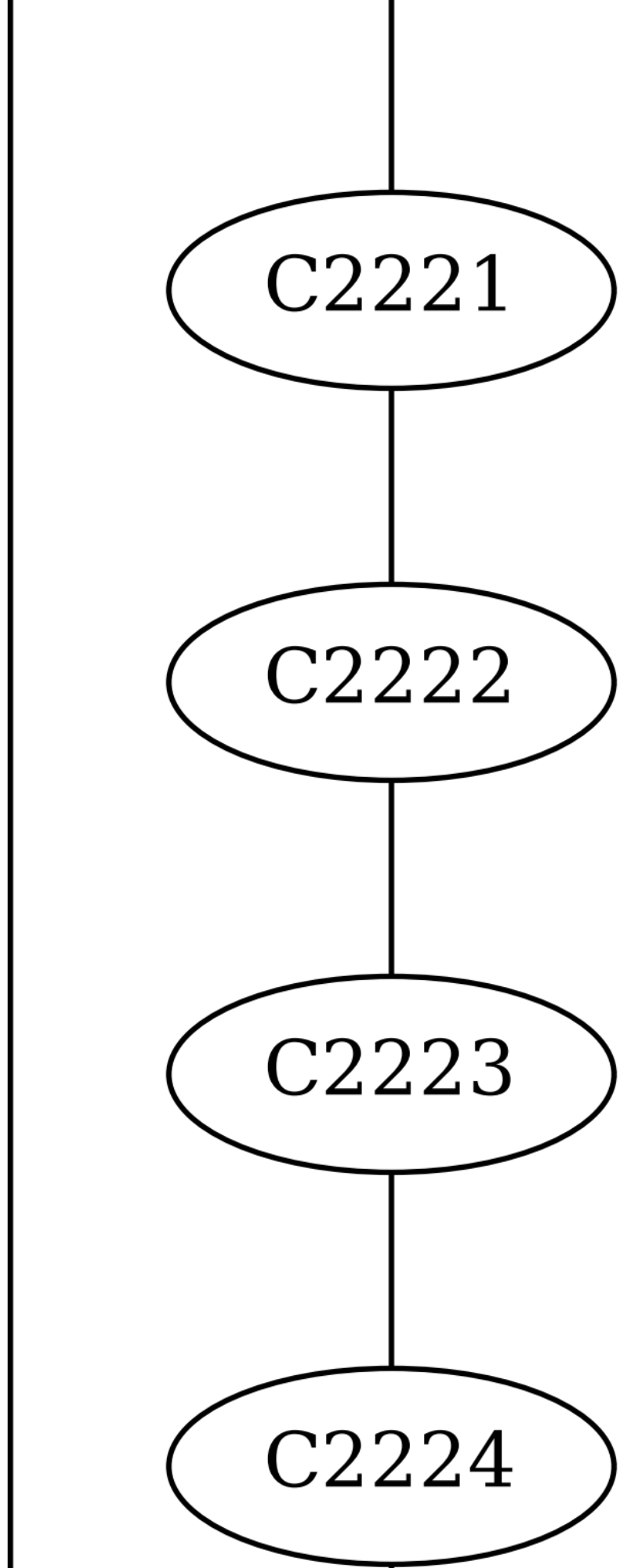
C2221
C2222
C2223
C2224

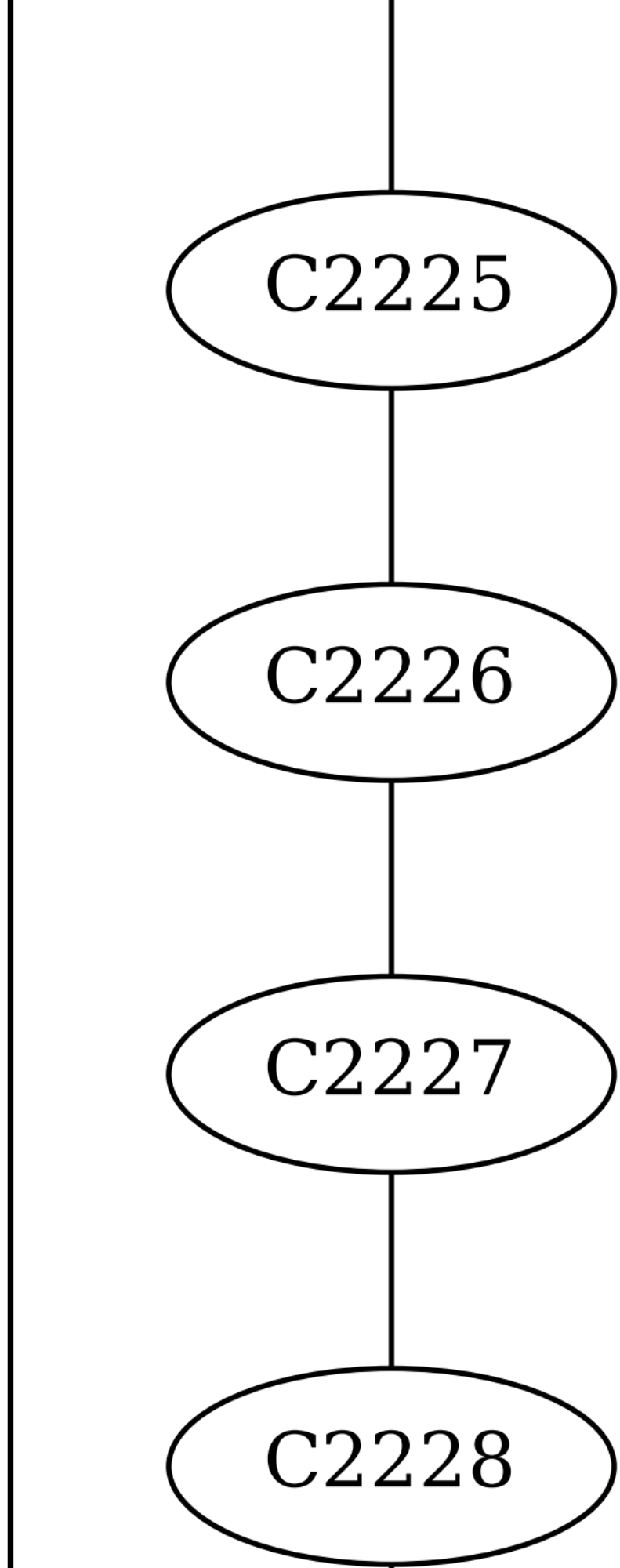
C2225
C2226
C2227
C2228

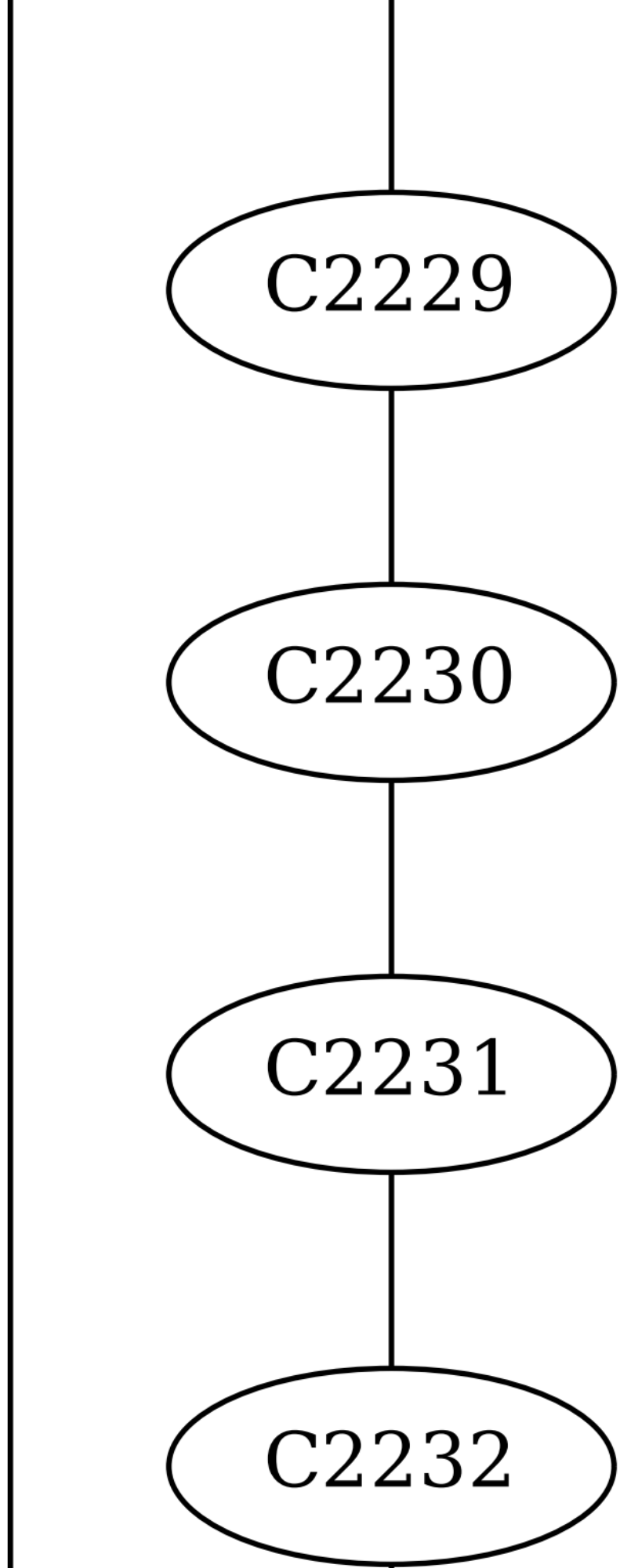
C2229
C2230
C2231
C2232

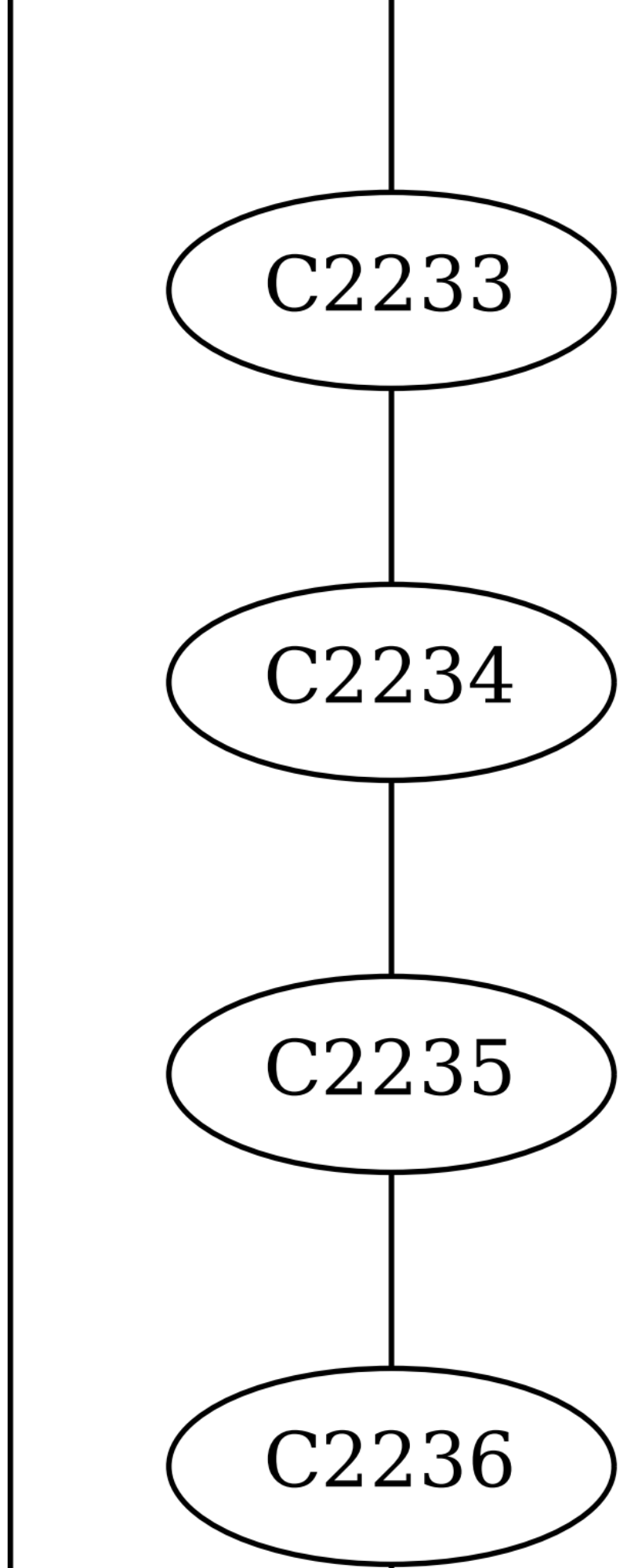
C2233
C2234
C2235
C2236

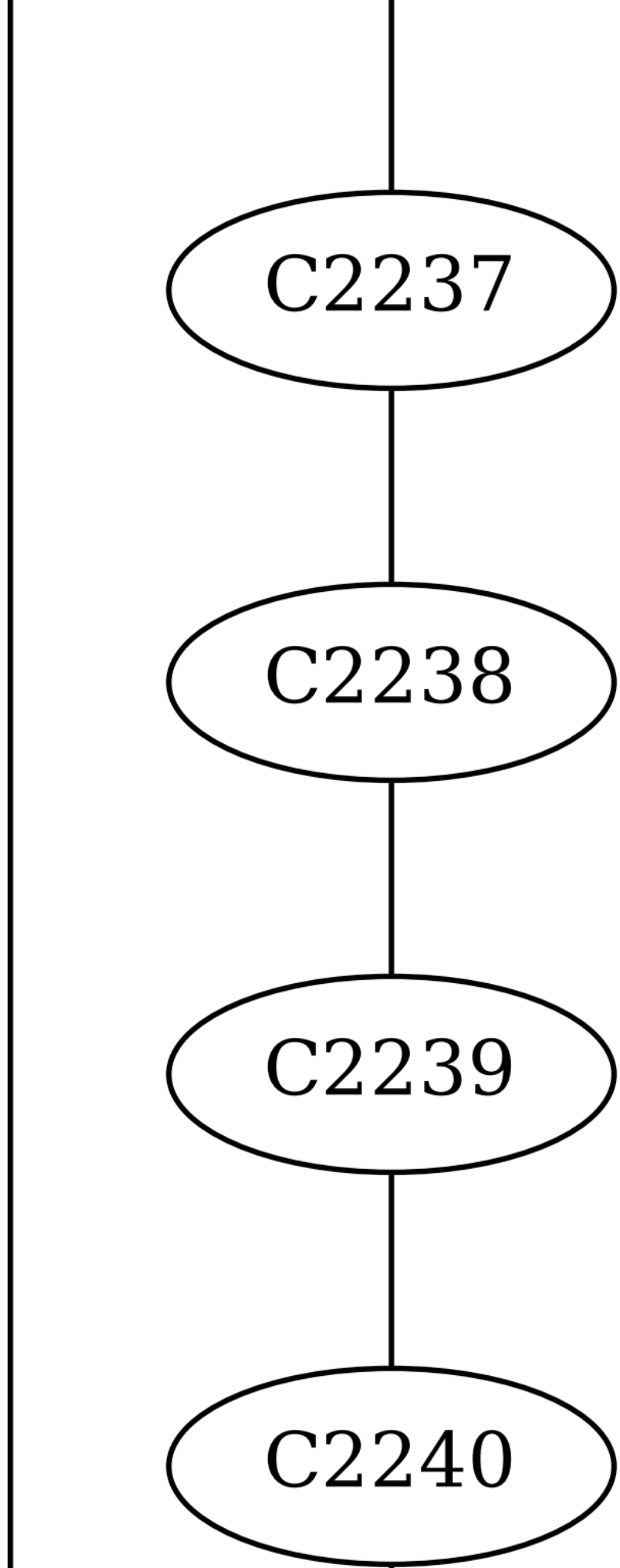
C2237
C2238
C2239
C2240

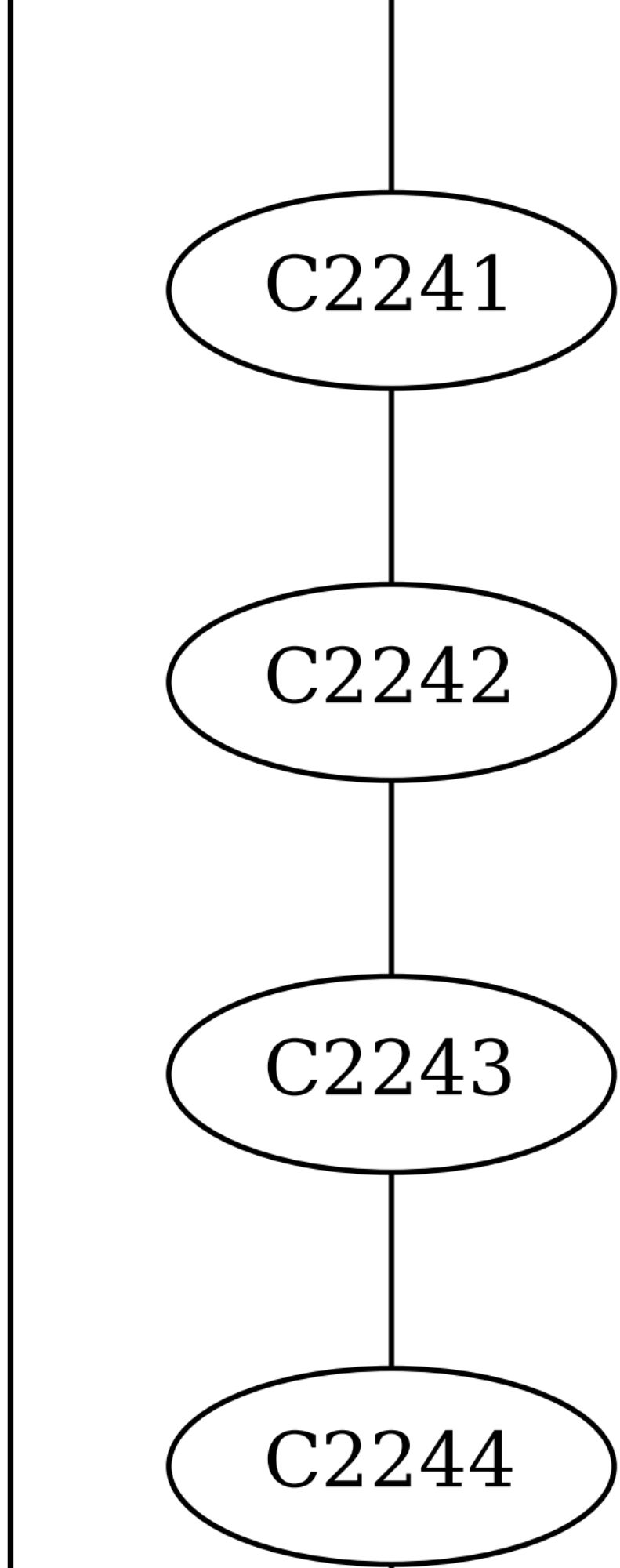
C2241
C2242
C2243
C2244

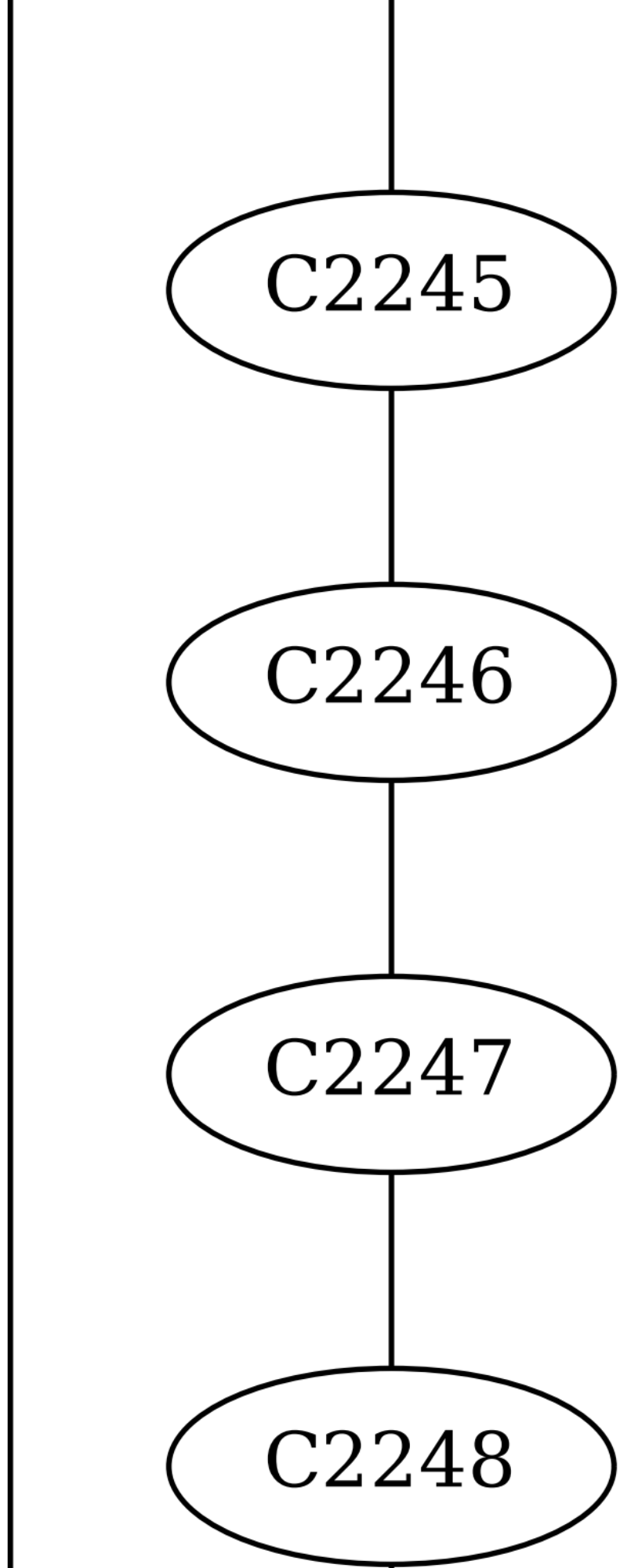
C2245
C2246
C2247
C2248

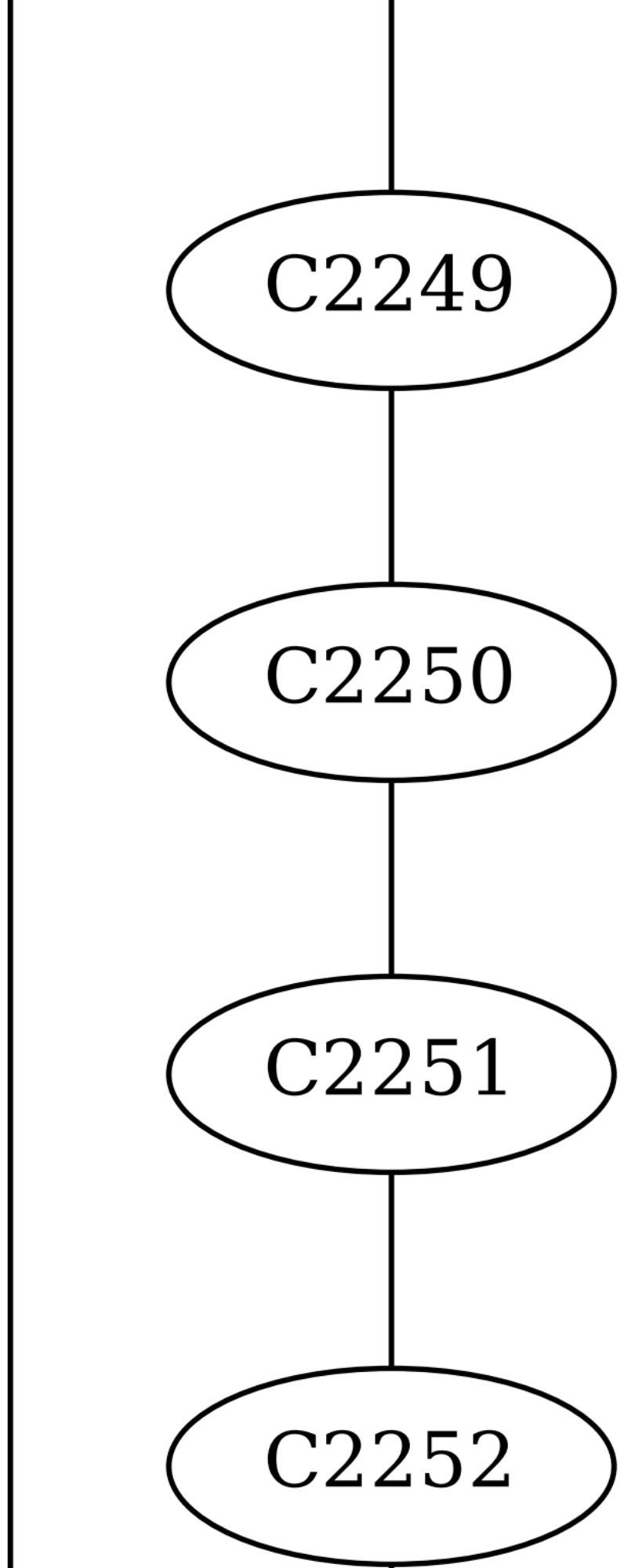
C2249
C2250
C2251
C2252

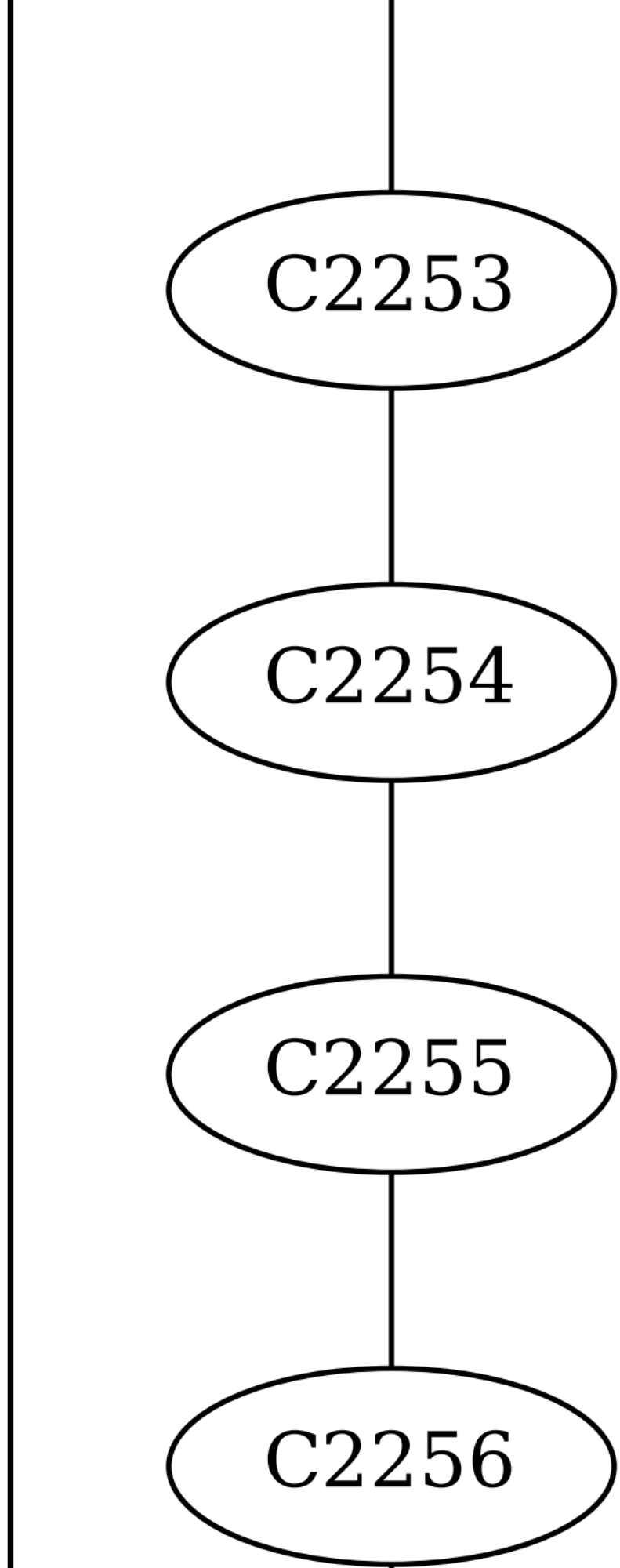
C2253
C2254
C2255
C2256

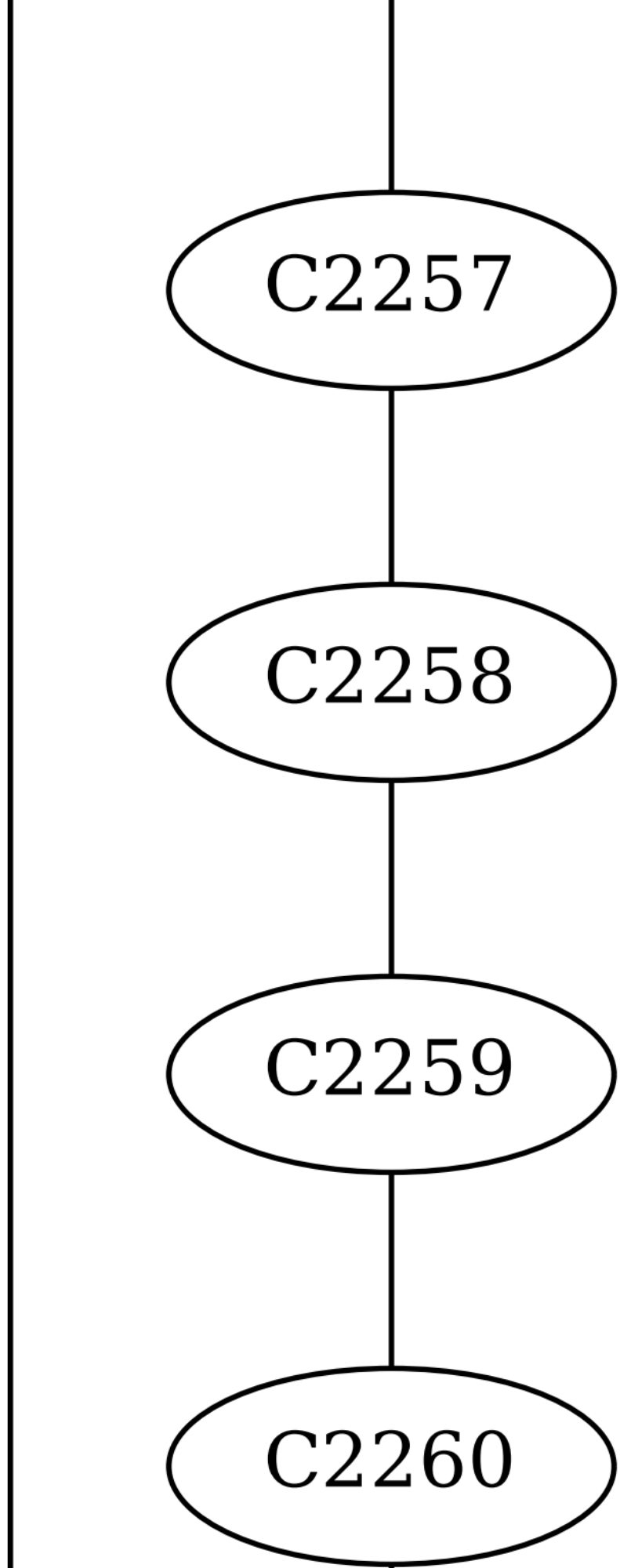
C2257
C2258
C2259
C2260

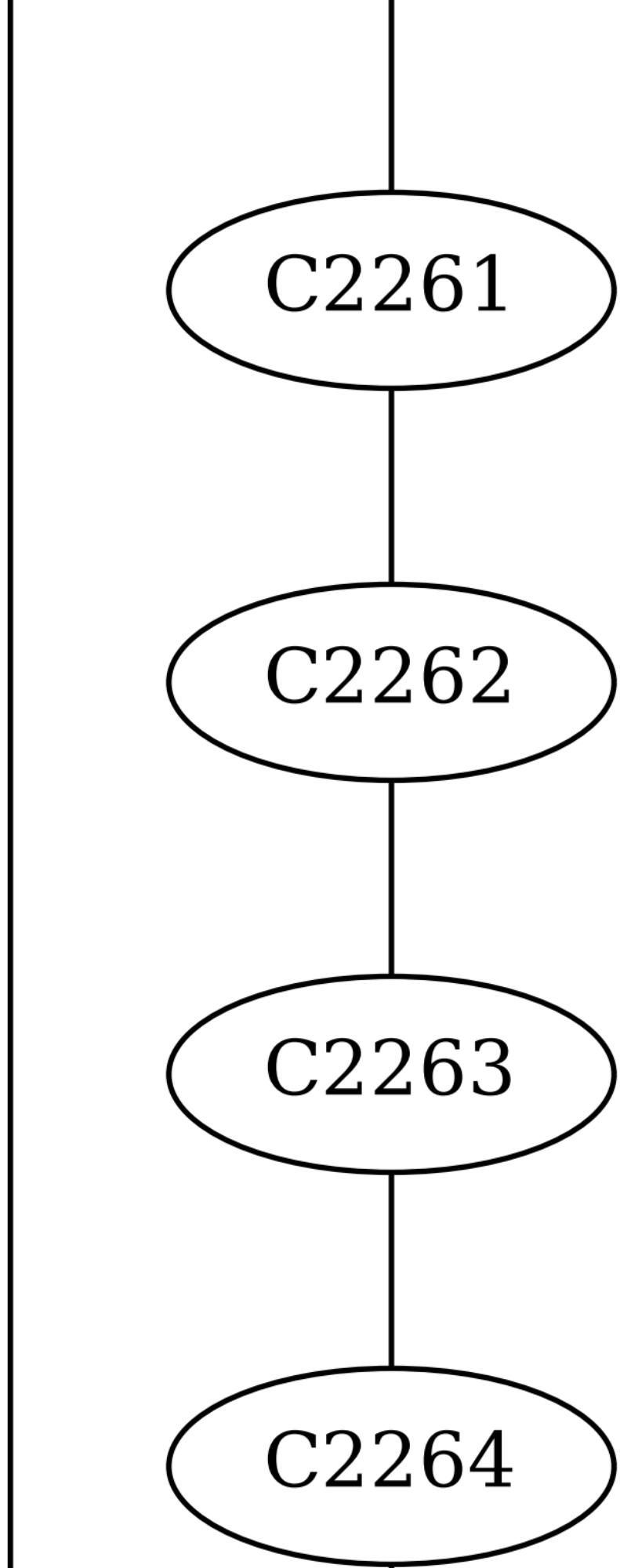
C2261
C2262
C2263
C2264

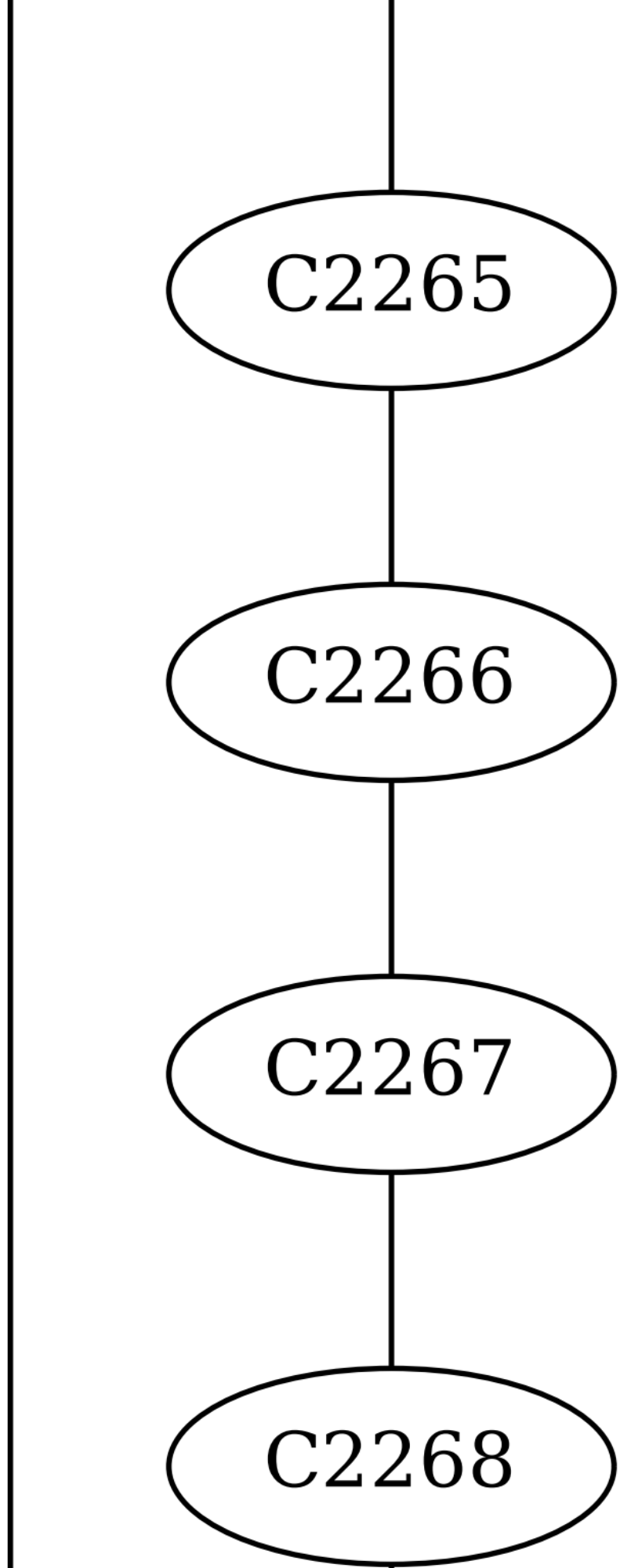
C2265
C2266
C2267
C2268

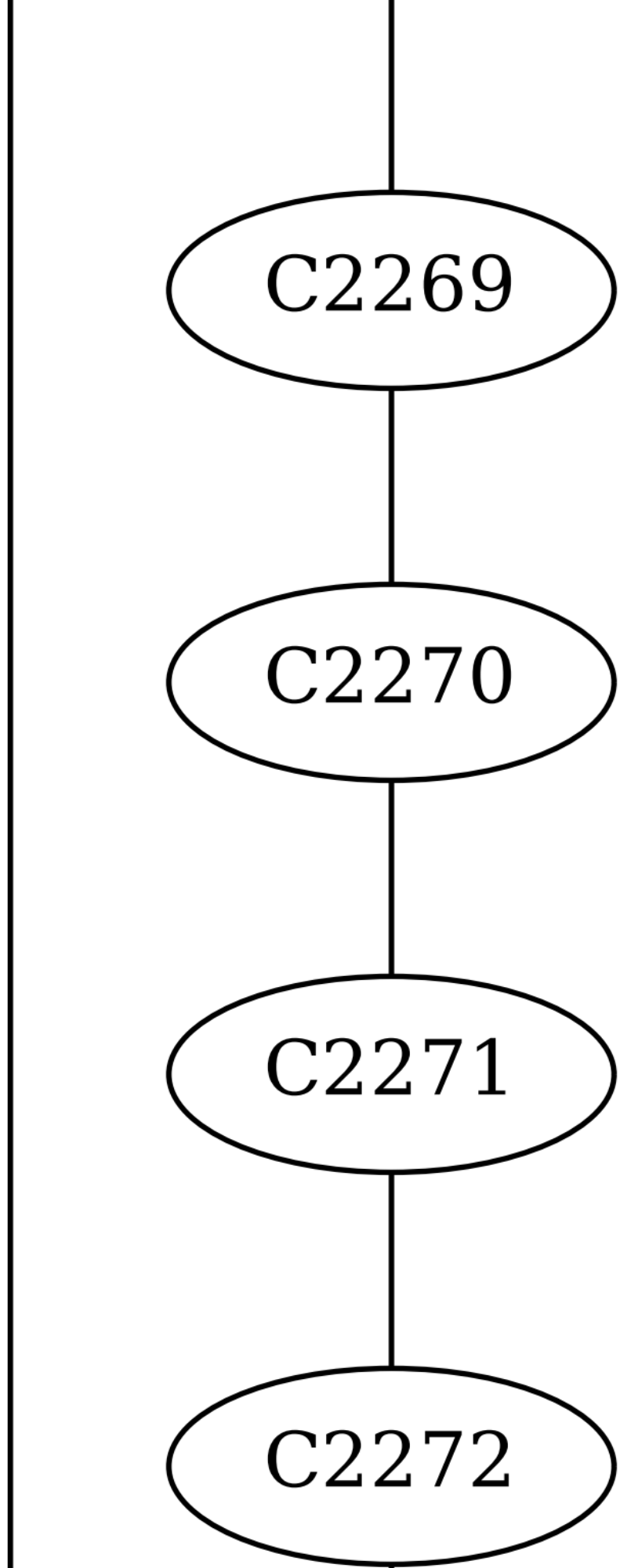
C2269
C2270
C2271
C2272

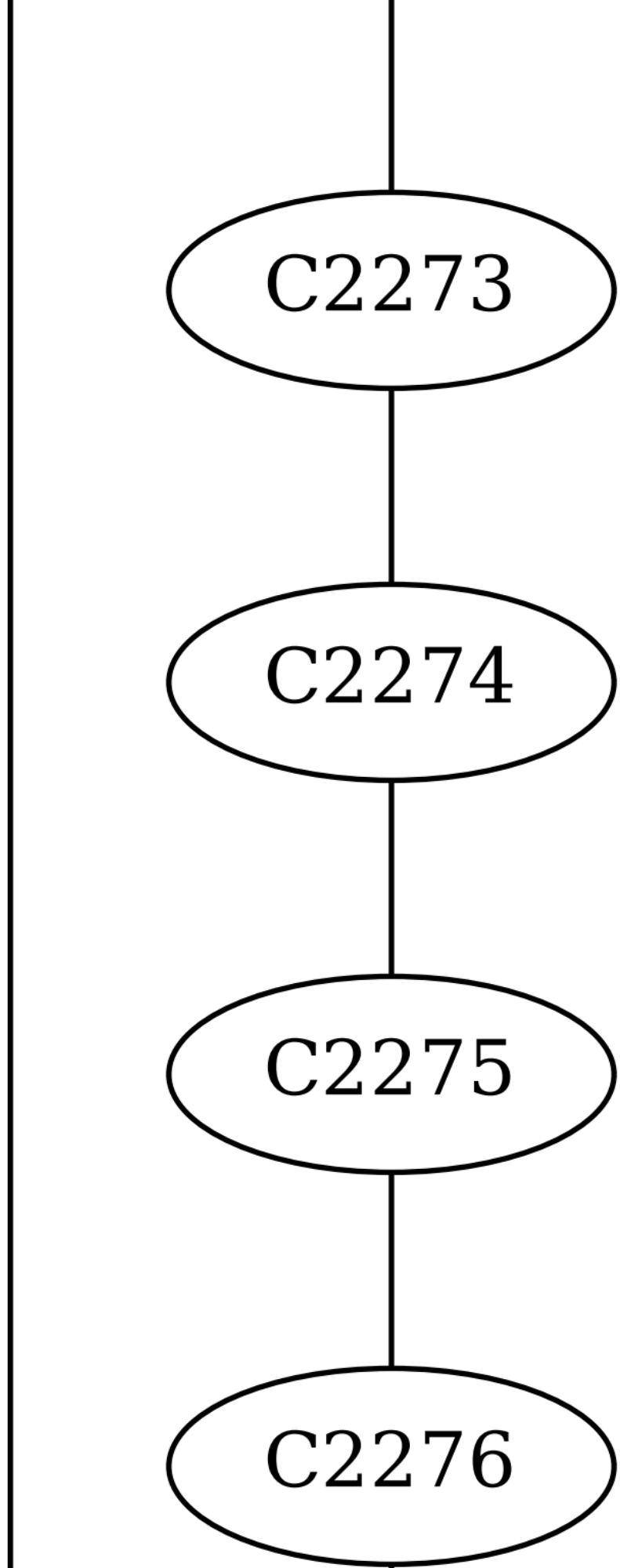
C2273
C2274
C2275
C2276

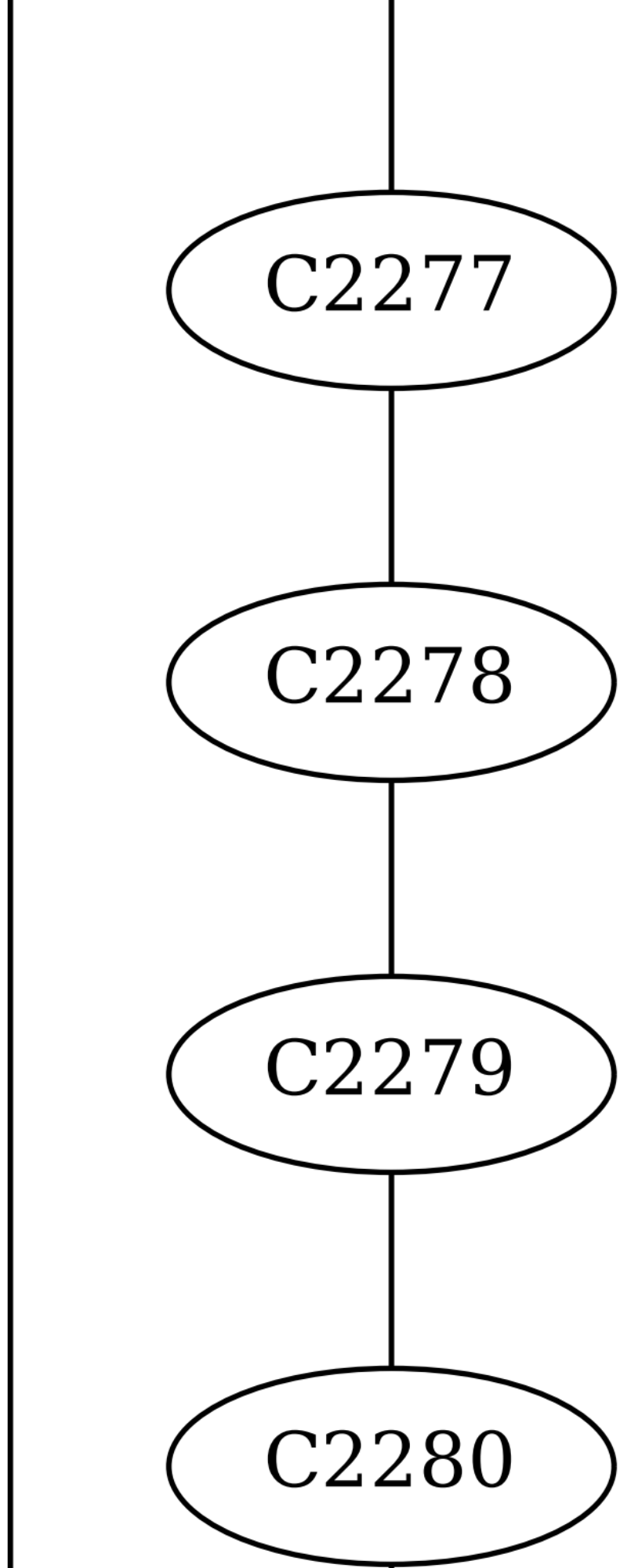
C2277
C2278
C2279
C2280

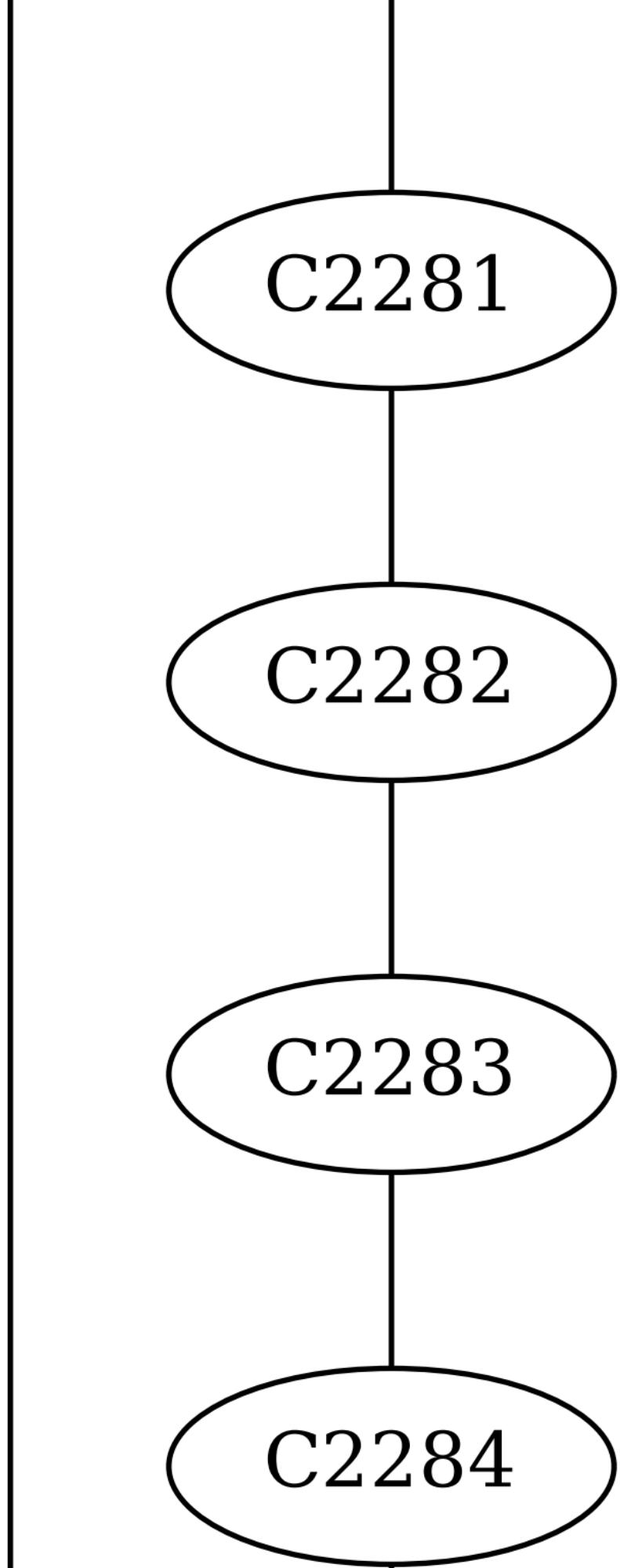
C2281
C2282
C2283
C2284

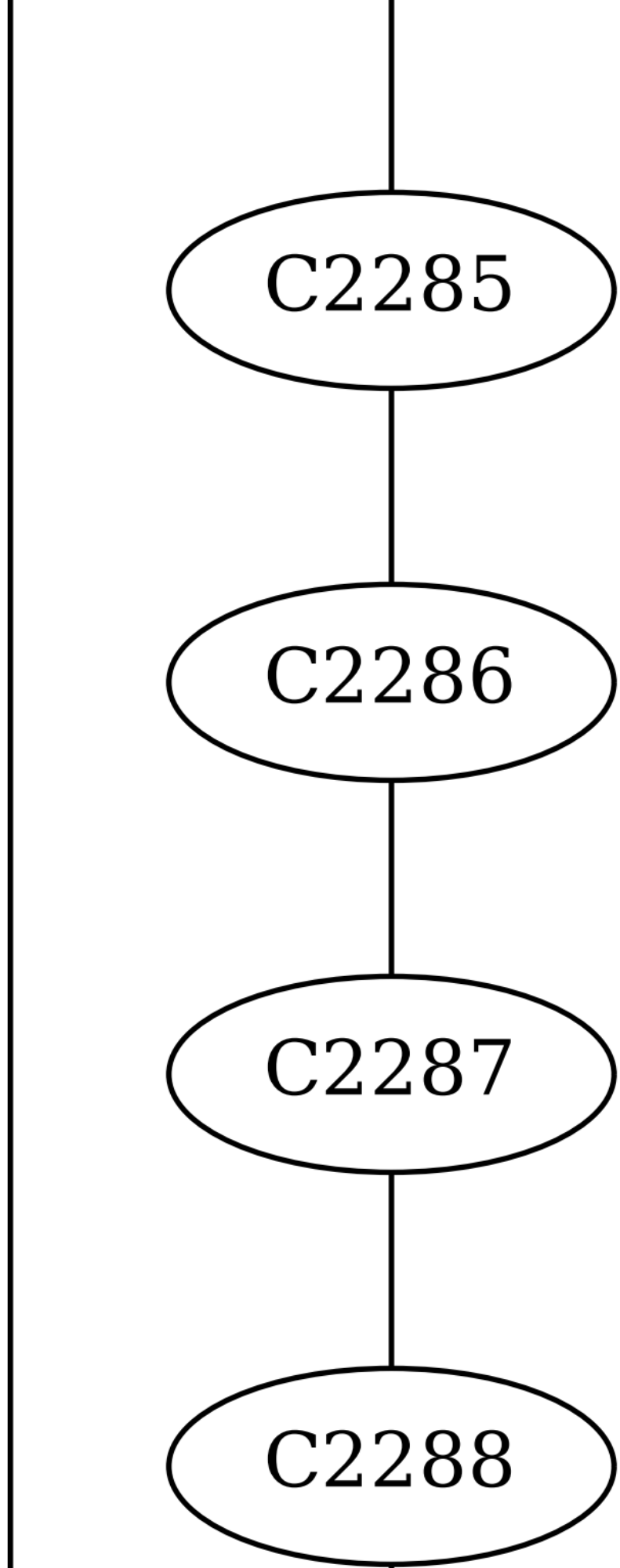
C2285
C2286
C2287
C2288

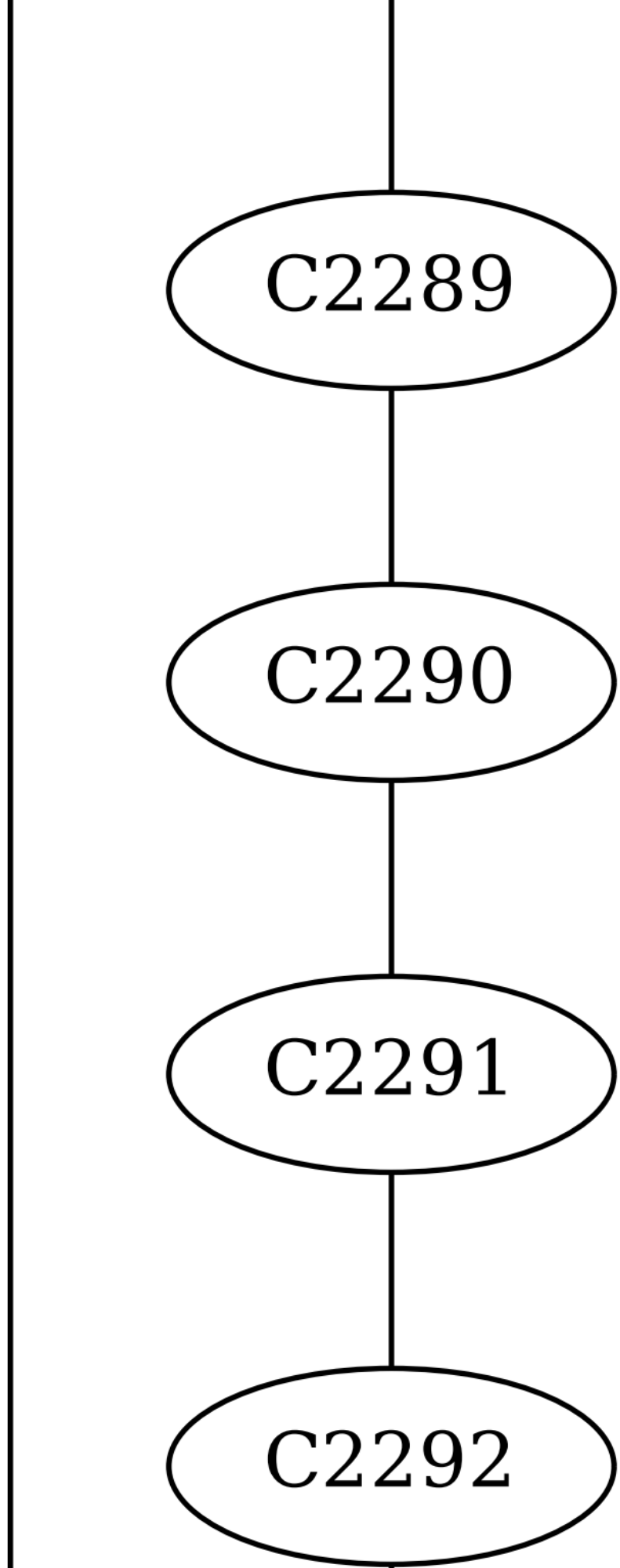
C2289
C2290
C2291
C2292

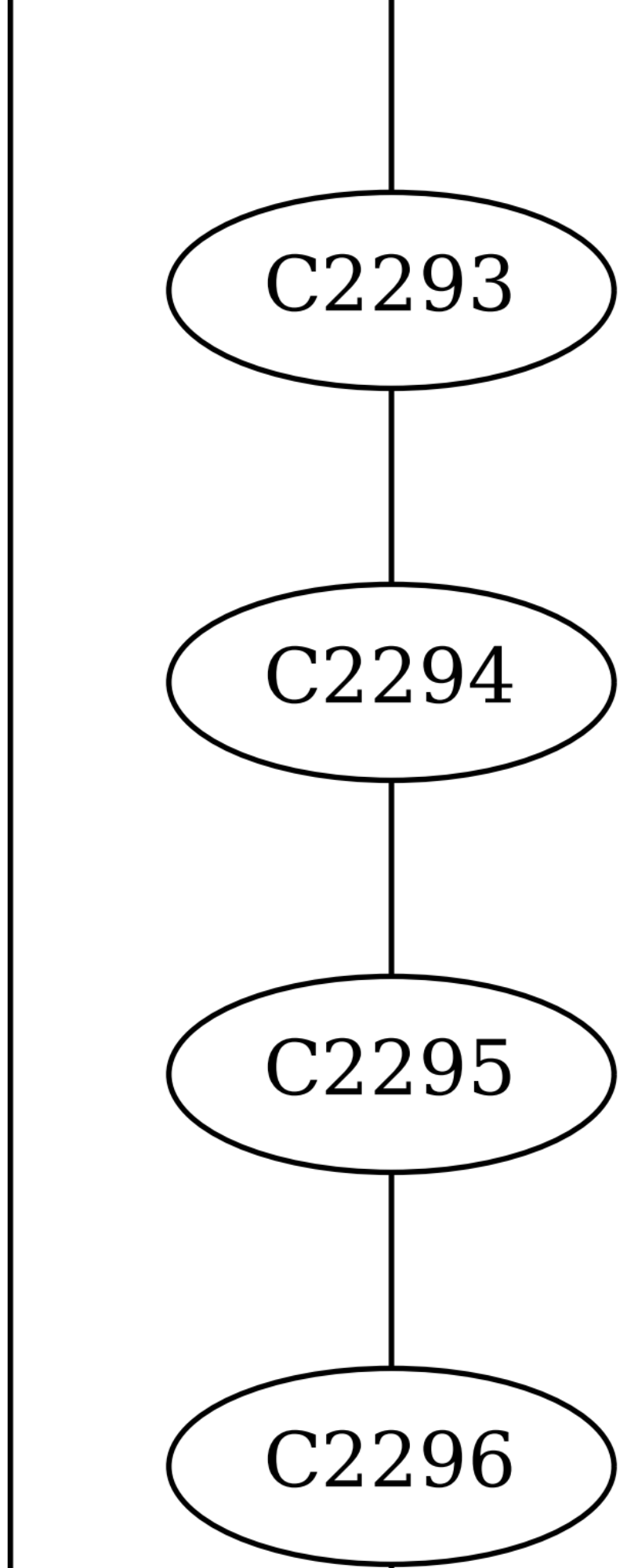
C2293
C2294
C2295
C2296

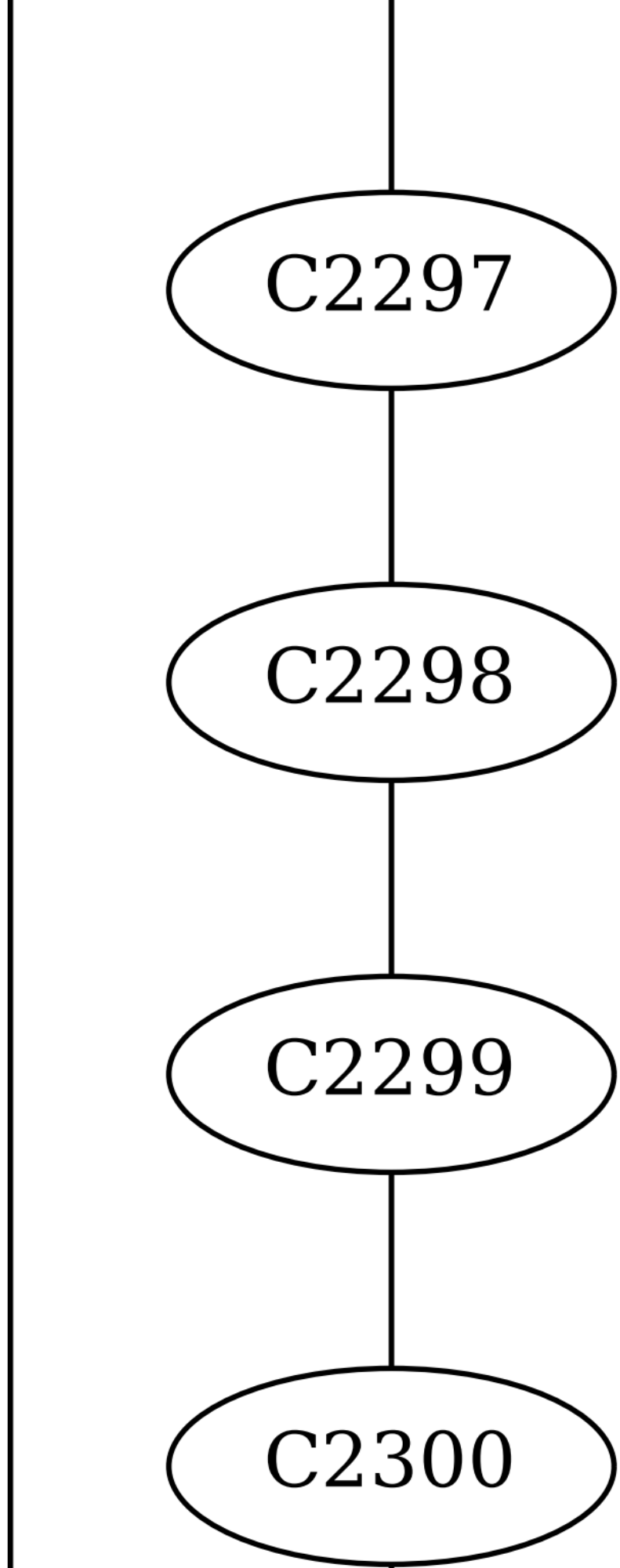
C2297
C2298
C2299
C2300

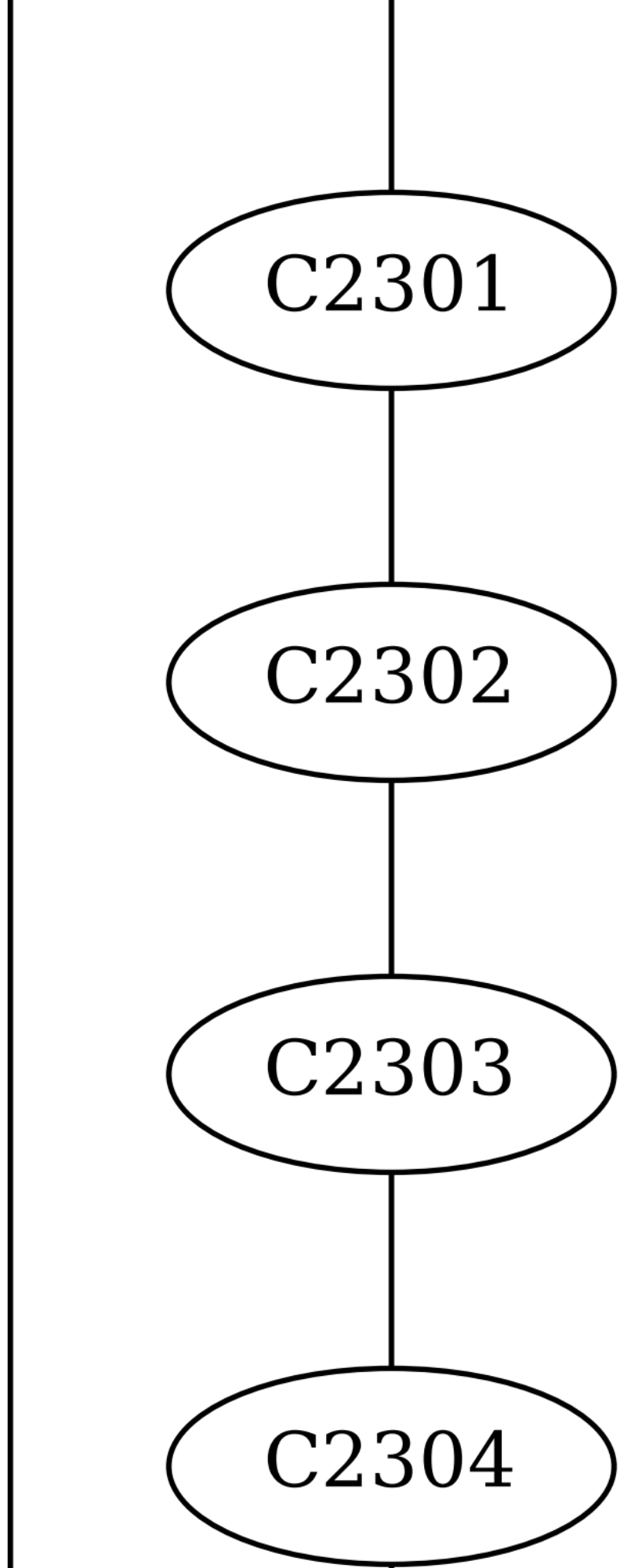
C2301
C2302
C2303
C2304

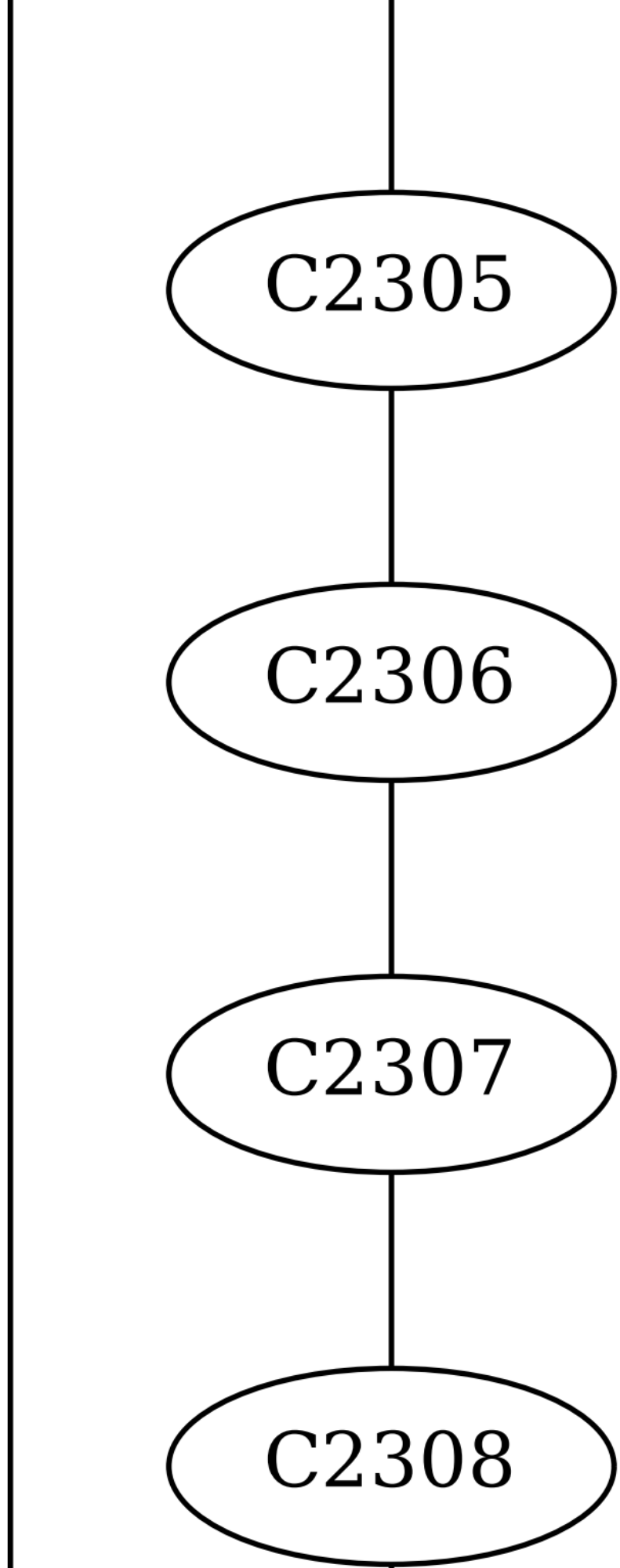
C2305
C2306
C2307
C2308

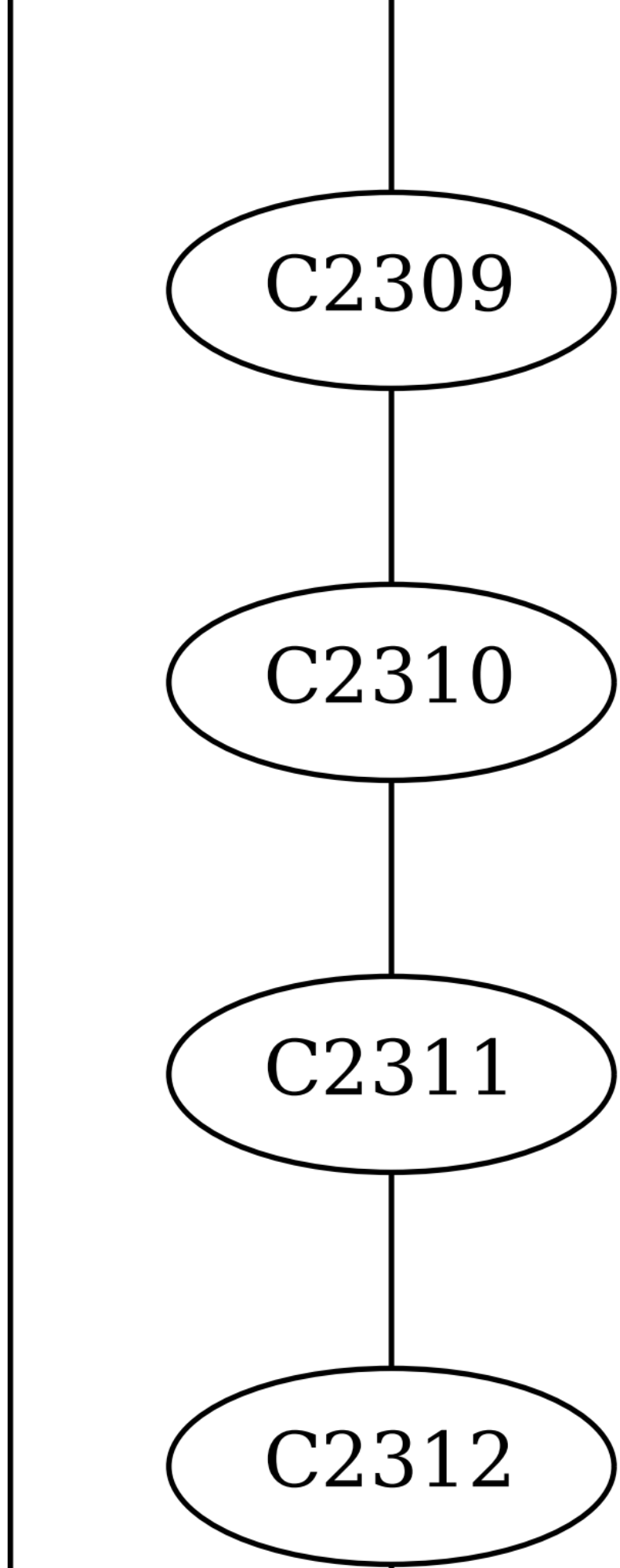
C2309
C2310
C2311
C2312

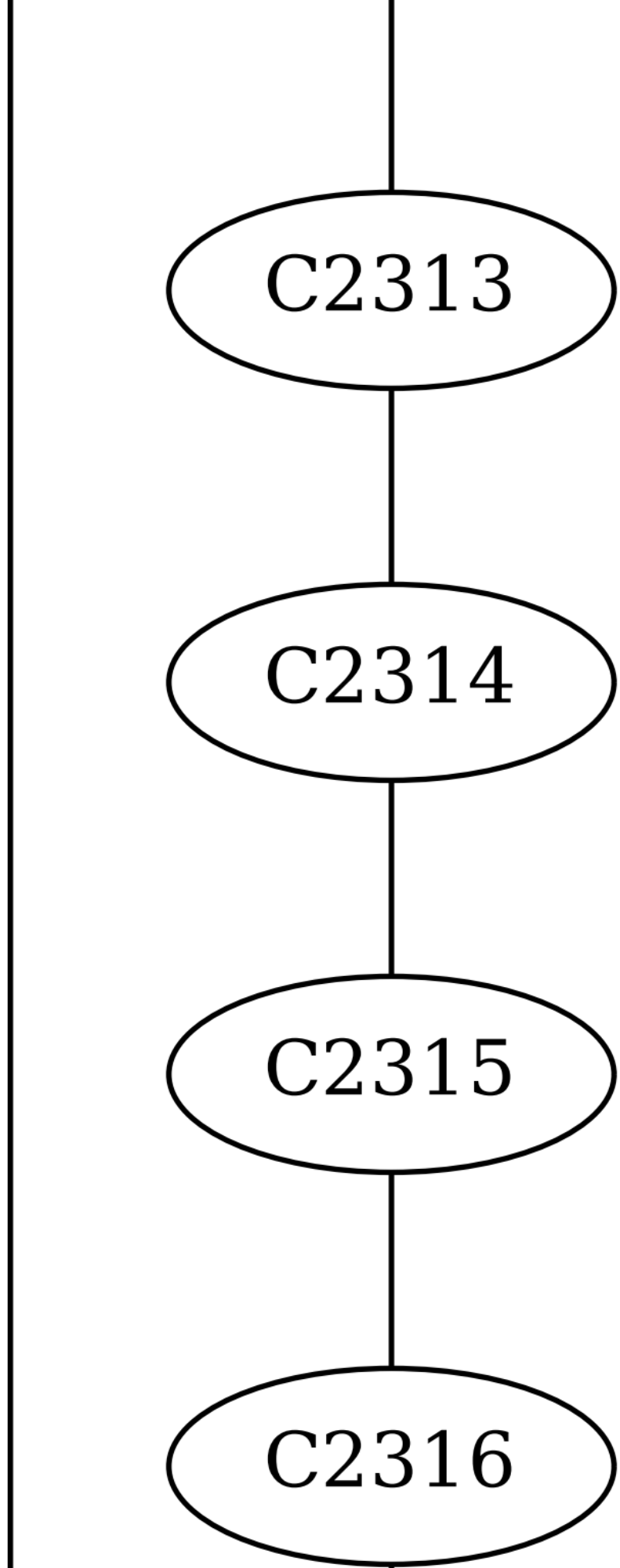
C2313
C2314
C2315
C2316

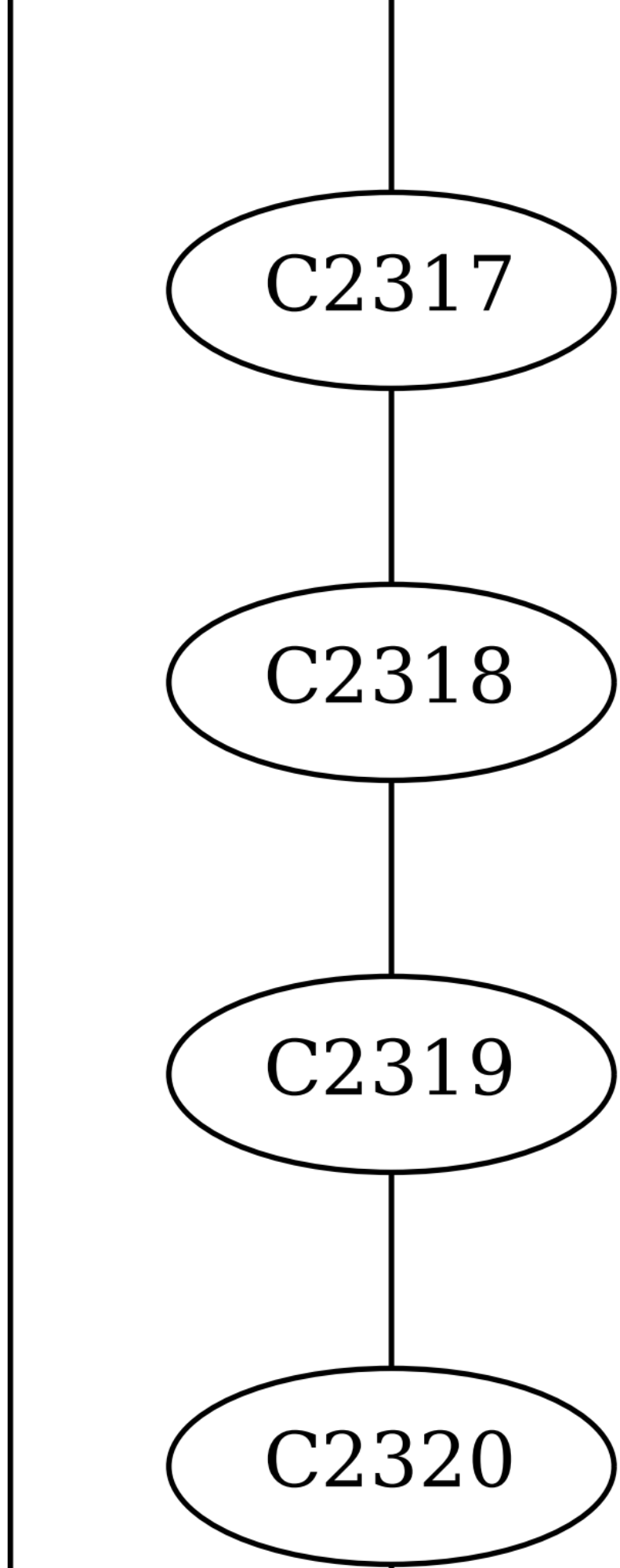
C2317
C2318
C2319
C2320

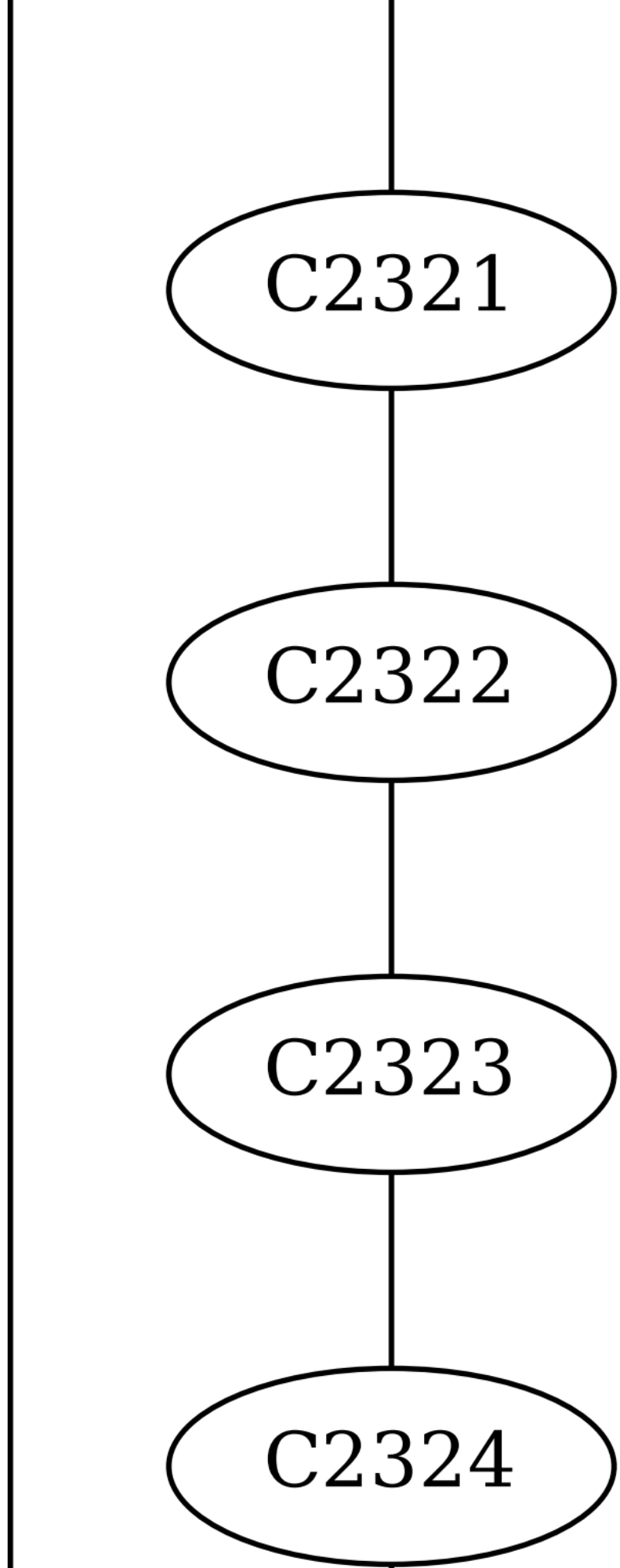
C2321
C2322
C2323
C2324

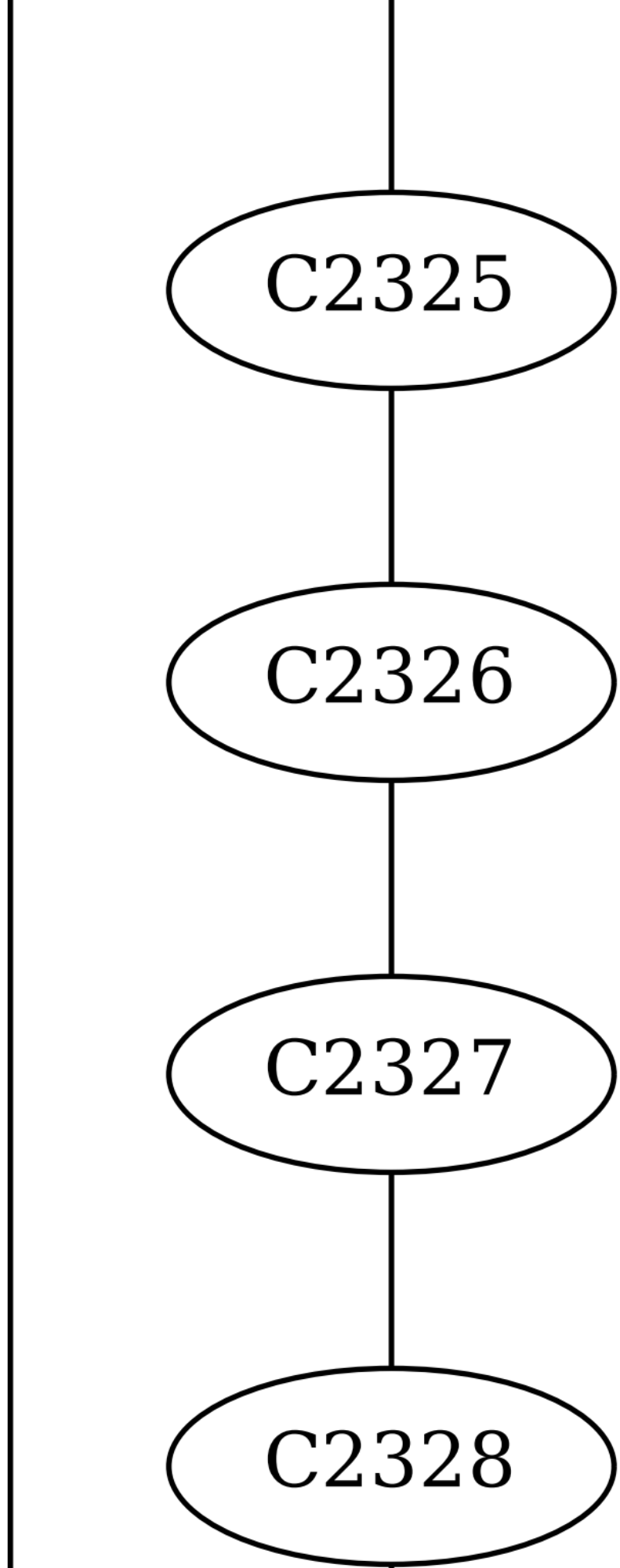
C2325
C2326
C2327
C2328

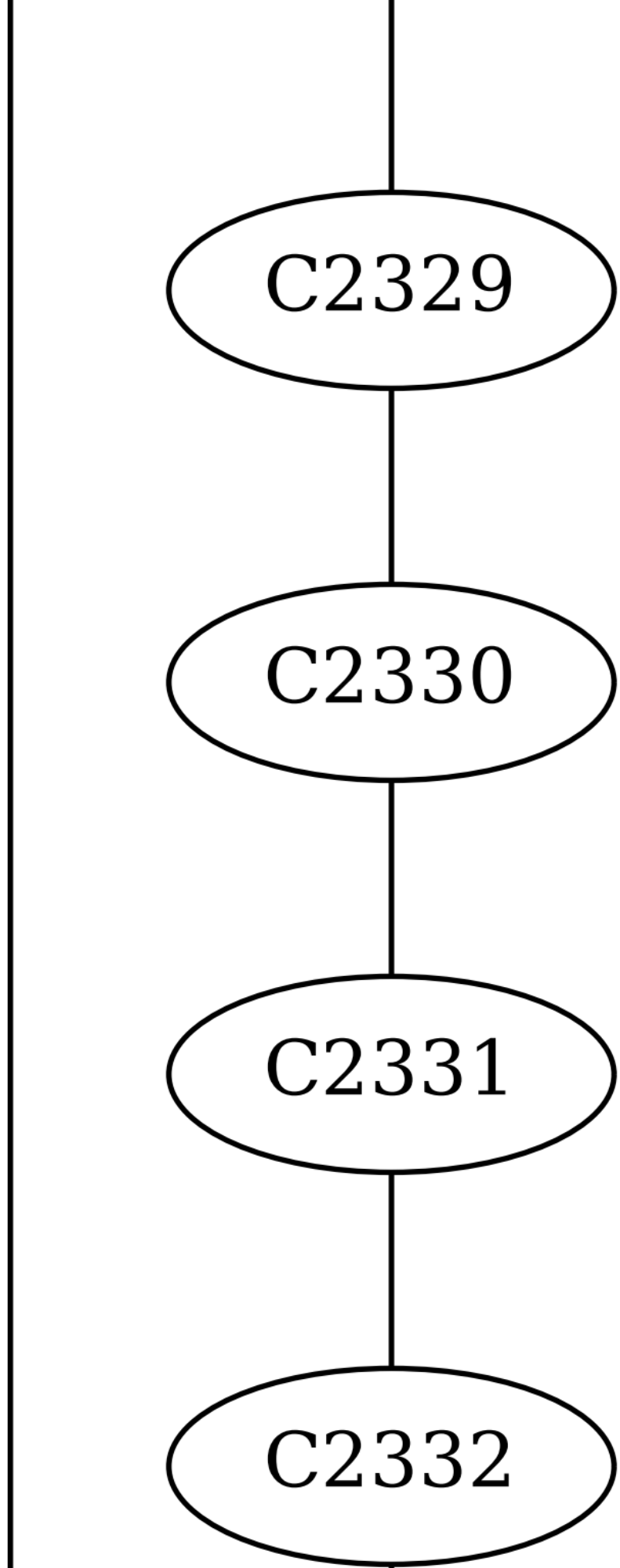
C2329
C2330
C2331
C2332

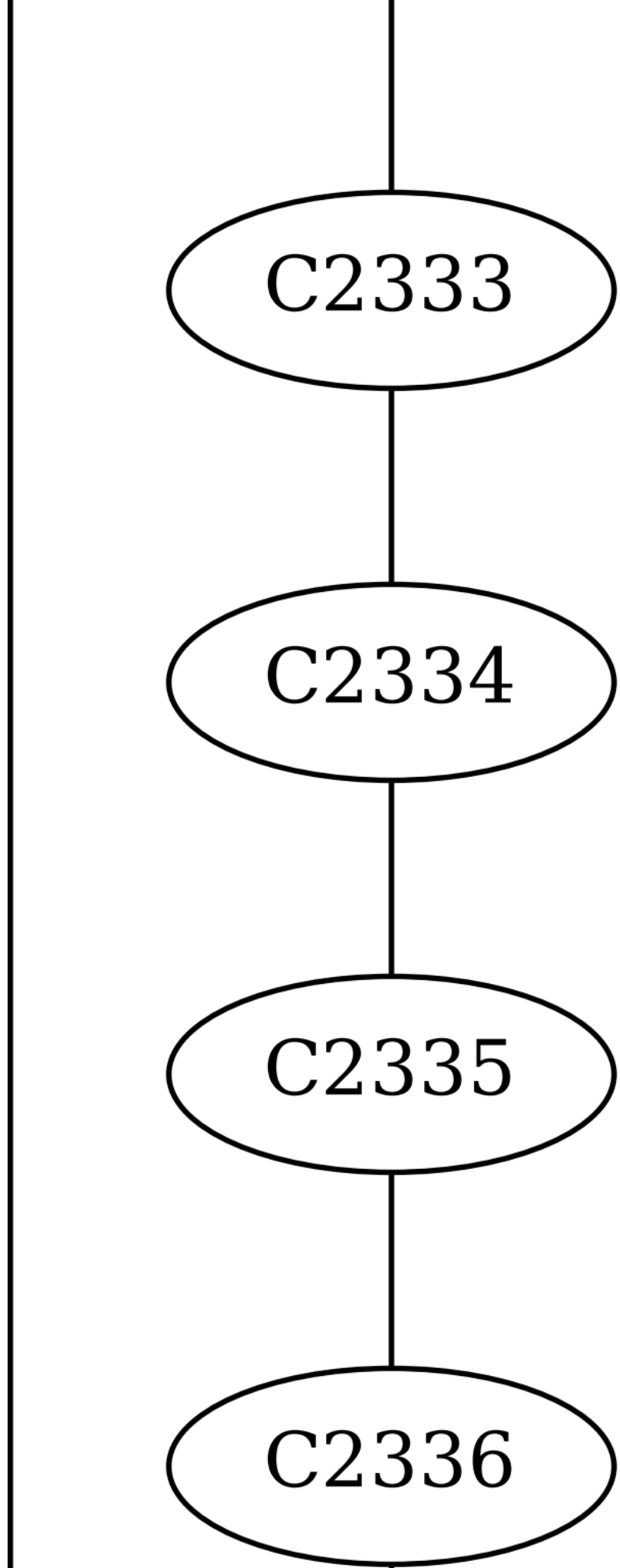
C2333
C2334
C2335
C2336

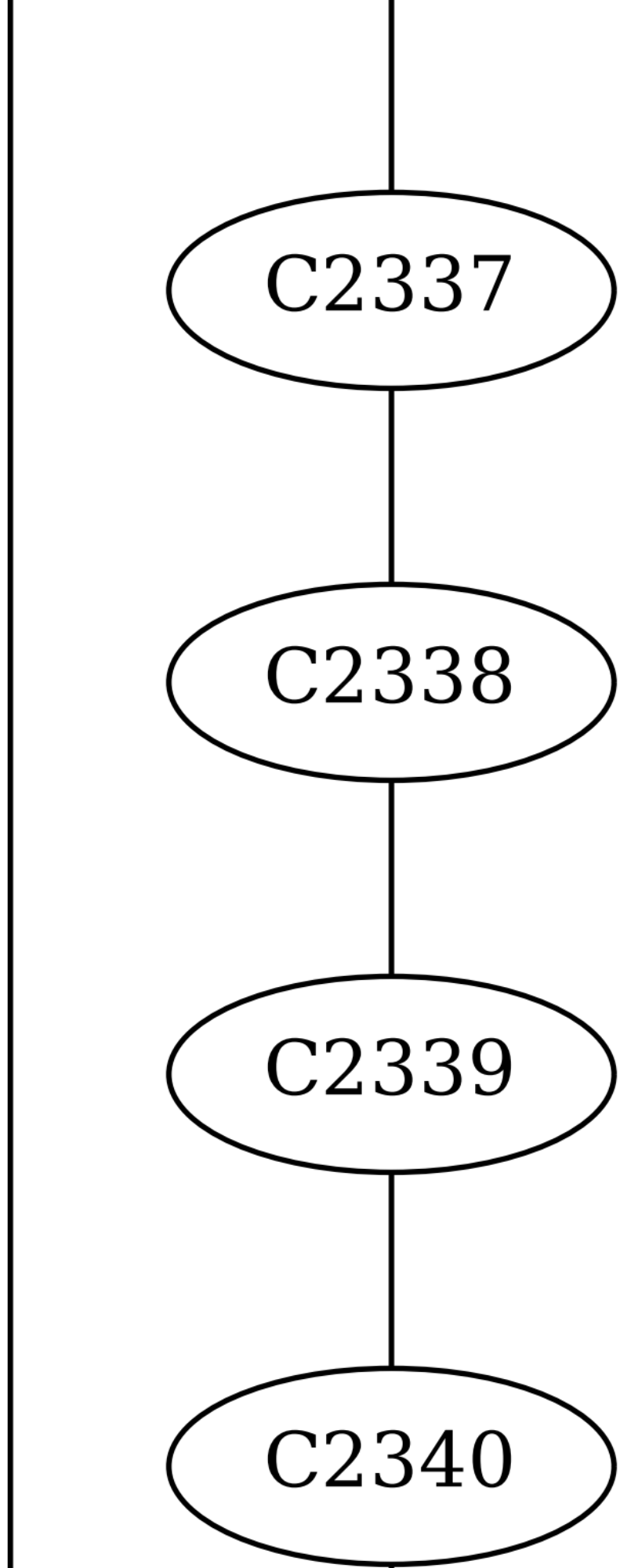
C2337
C2338
C2339
C2340

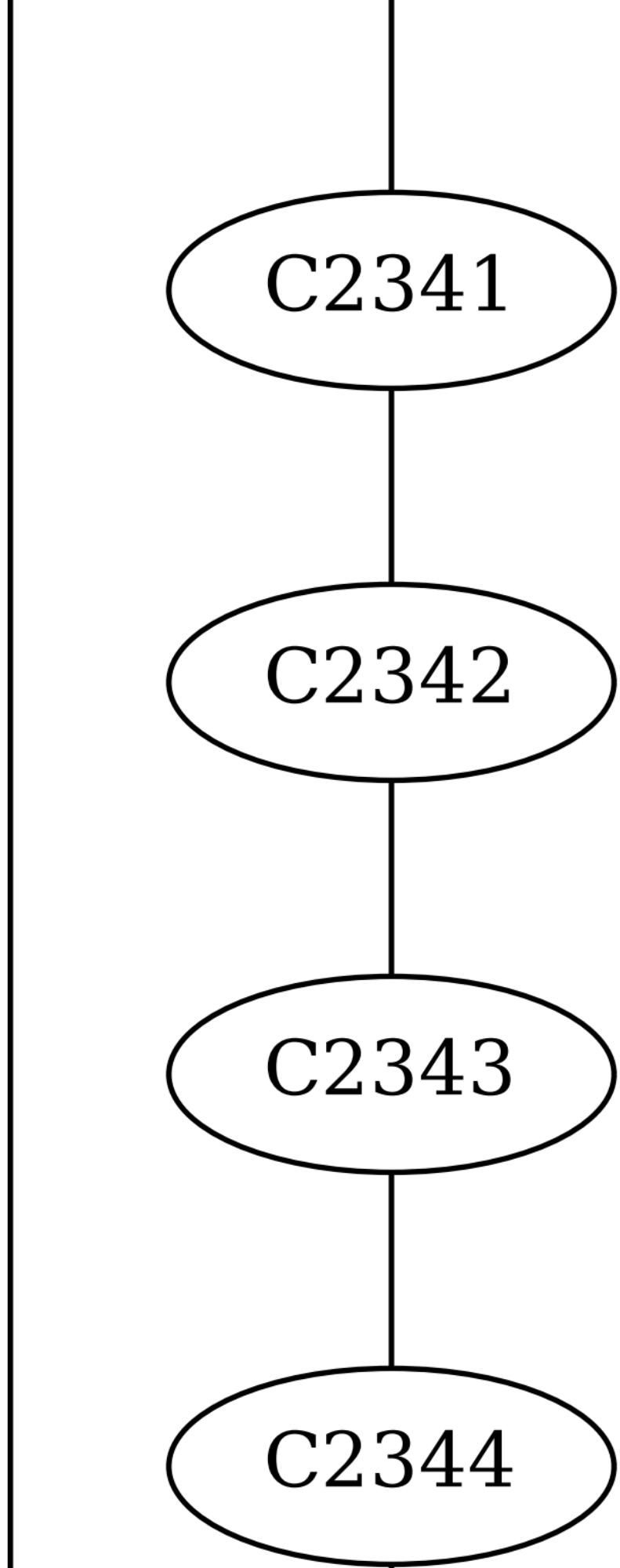
C2341
C2342
C2343
C2344

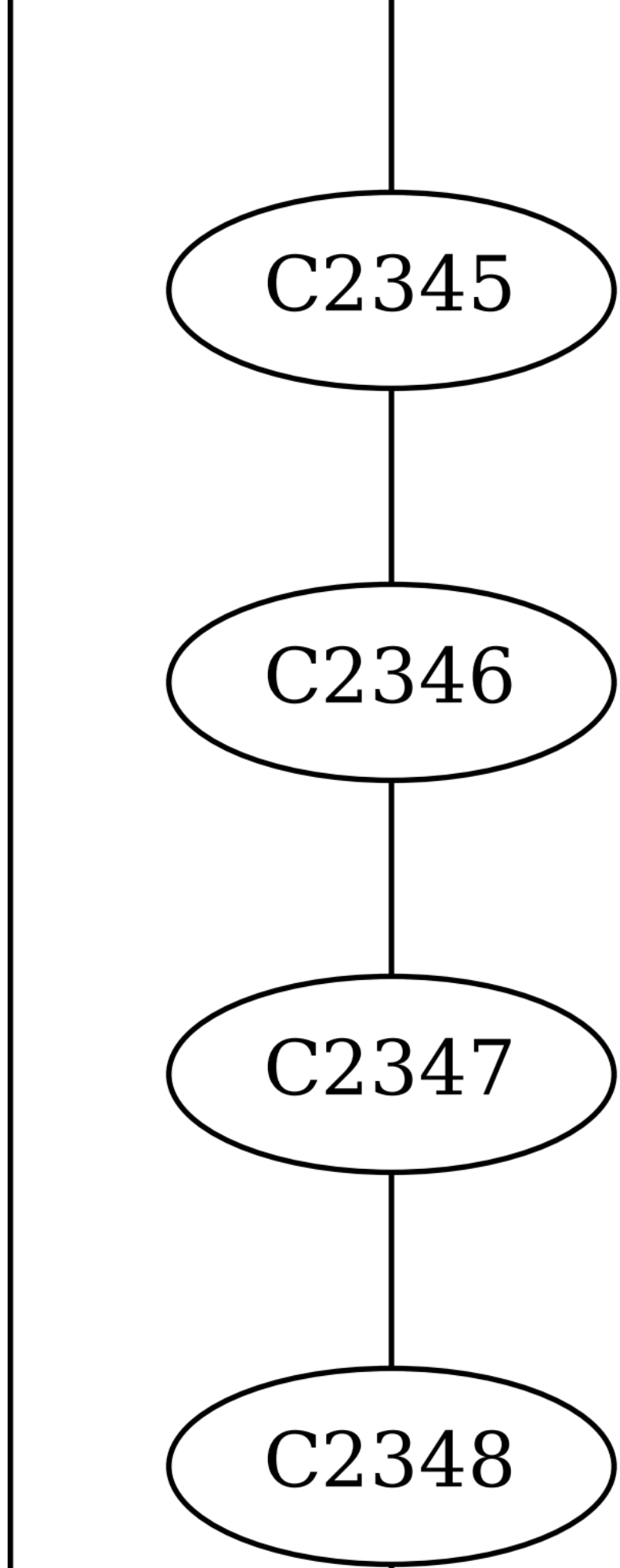
C2345
C2346
C2347
C2348

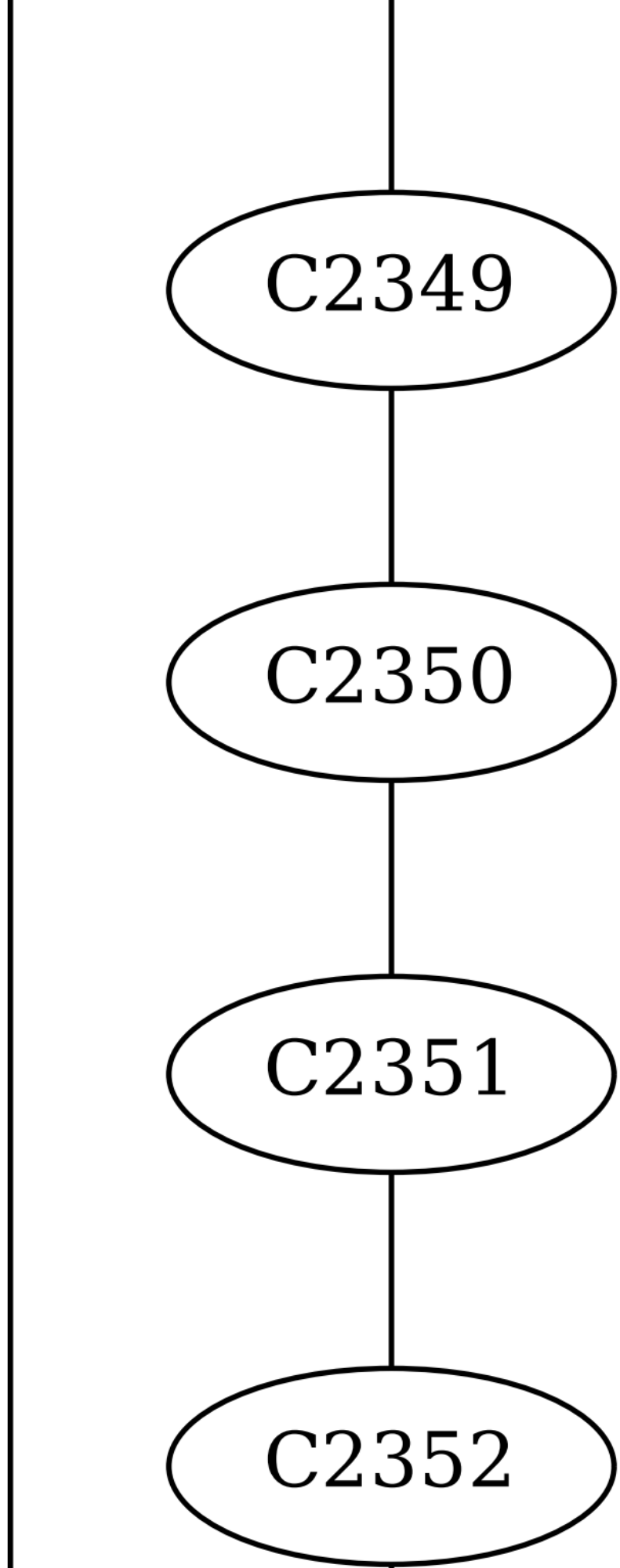
C2349
C2350
C2351
C2352

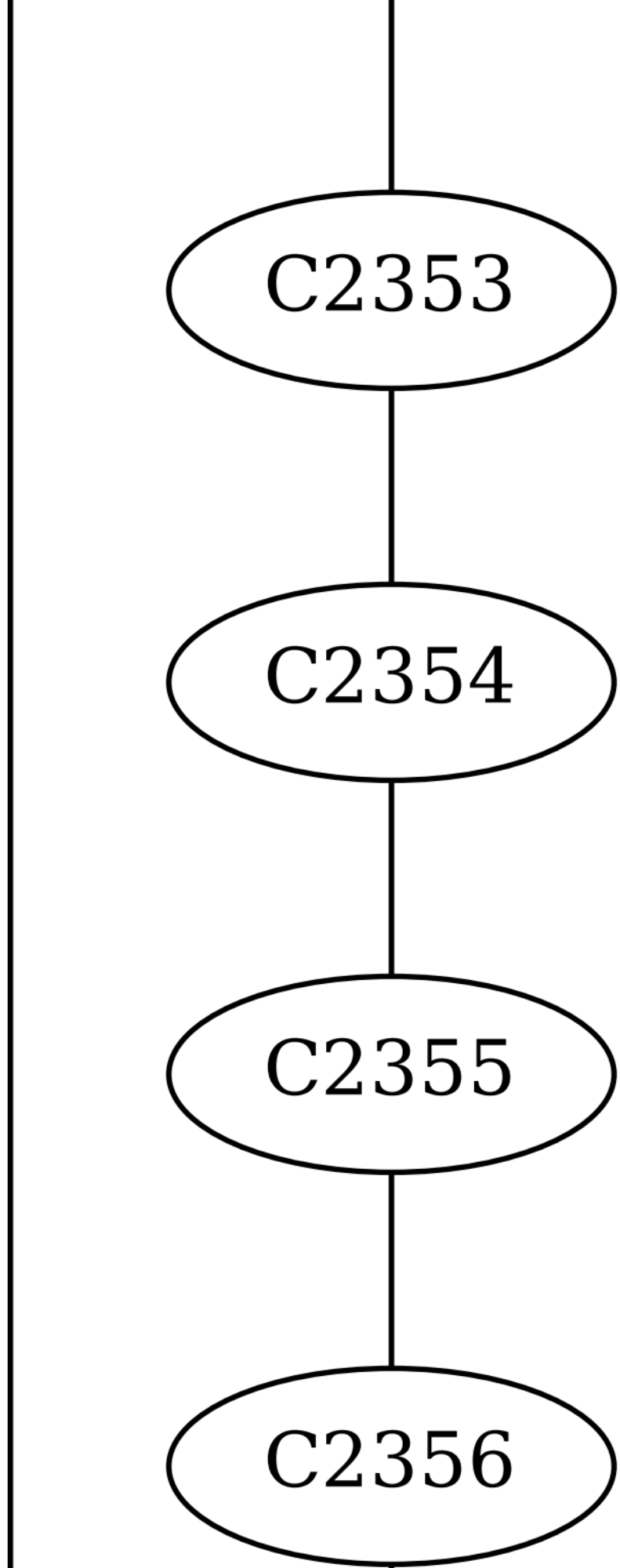
C2353
C2354
C2355
C2356

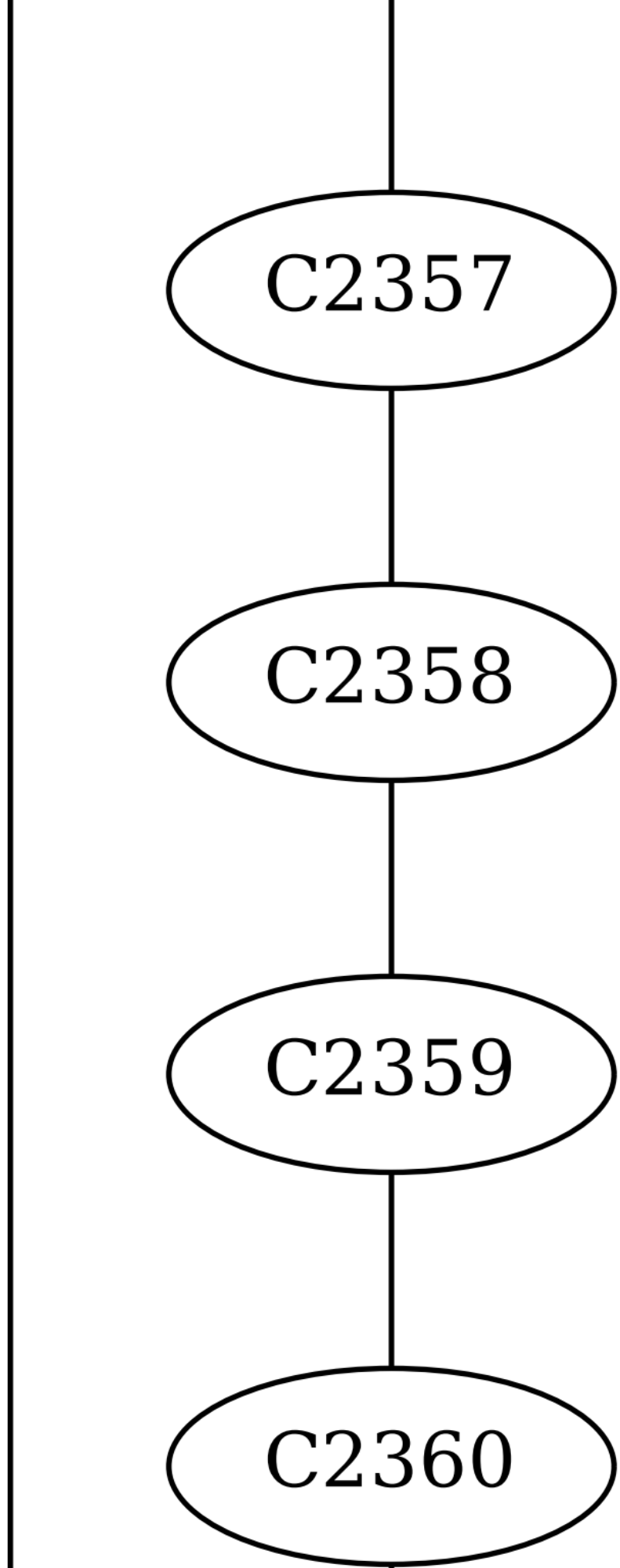
C2357
C2358
C2359
C2360

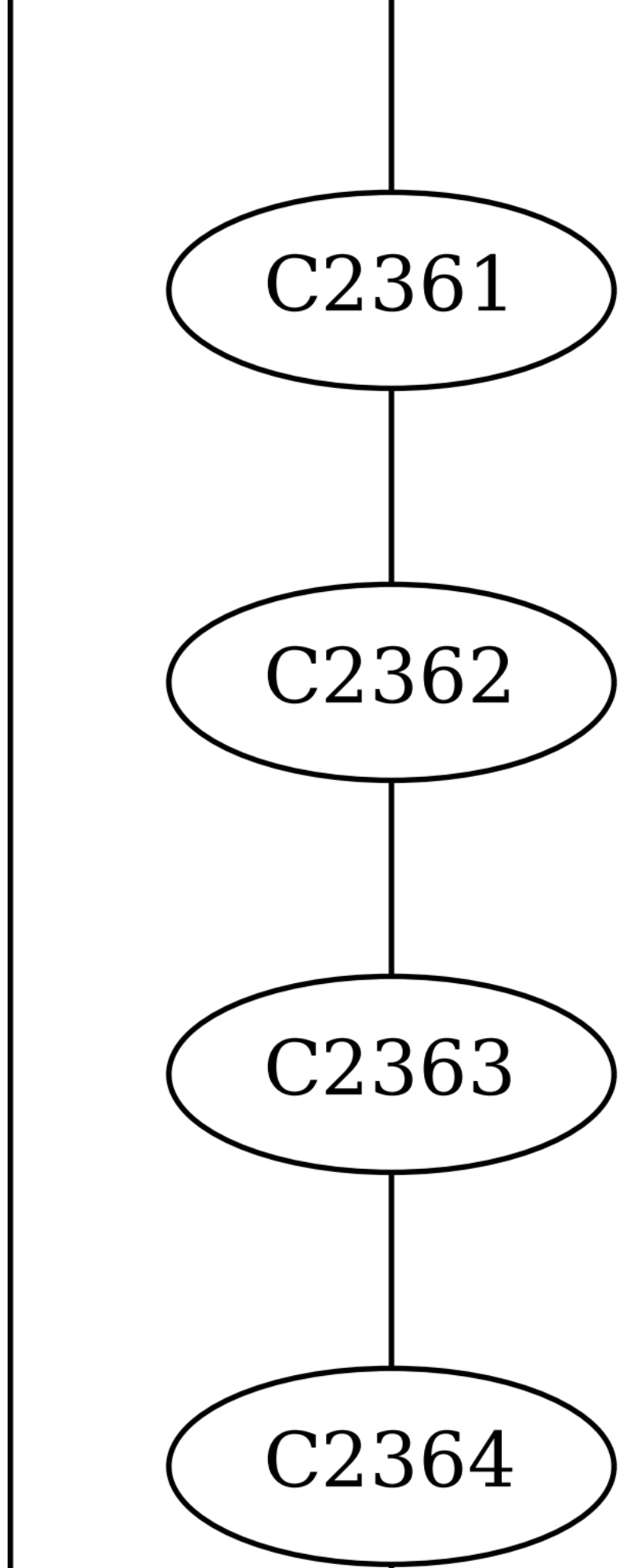
C2361
C2362
C2363
C2364

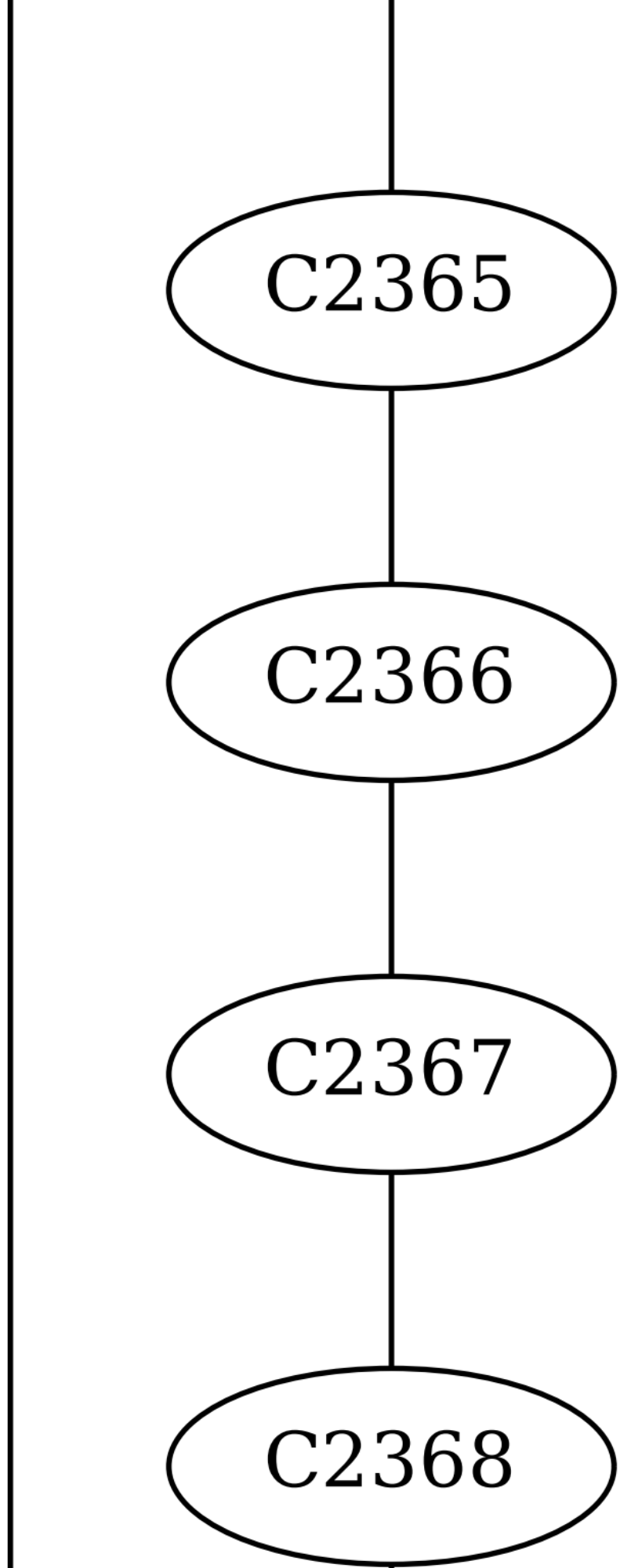
C2365
C2366
C2367
C2368

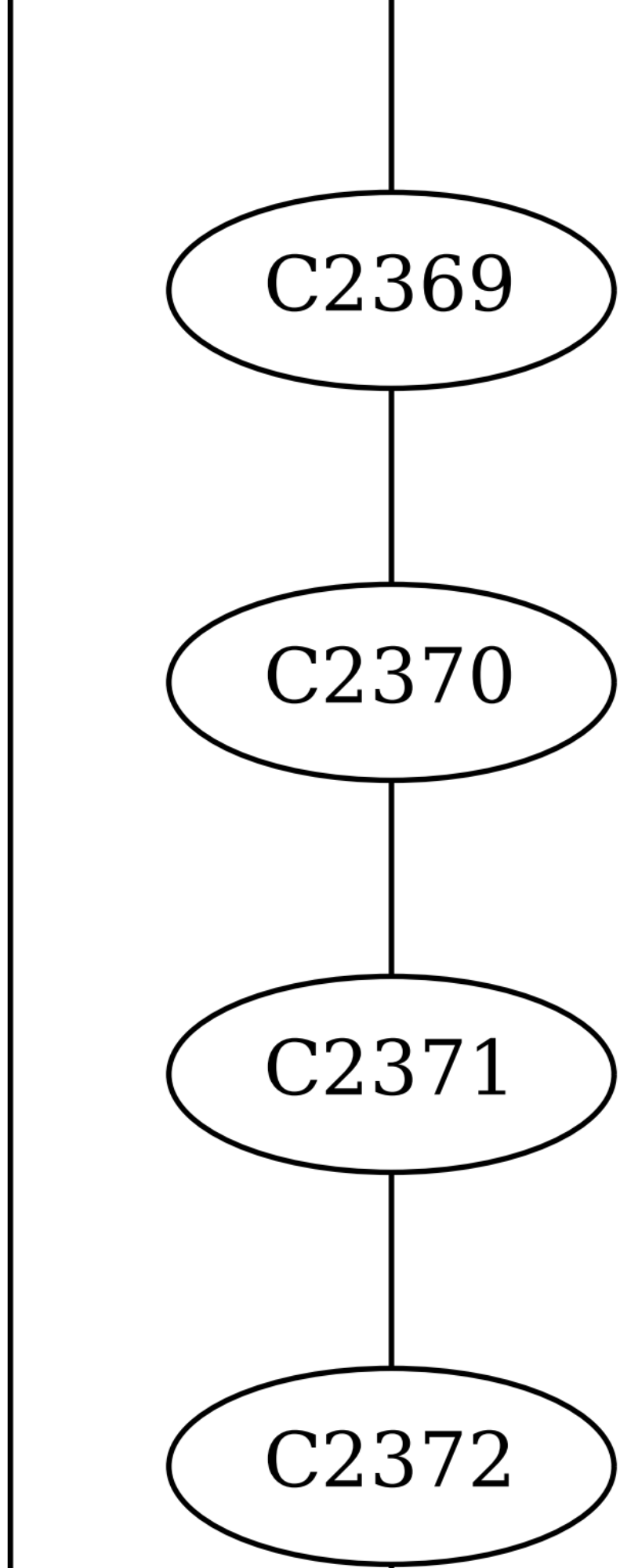
C2369
C2370
C2371
C2372

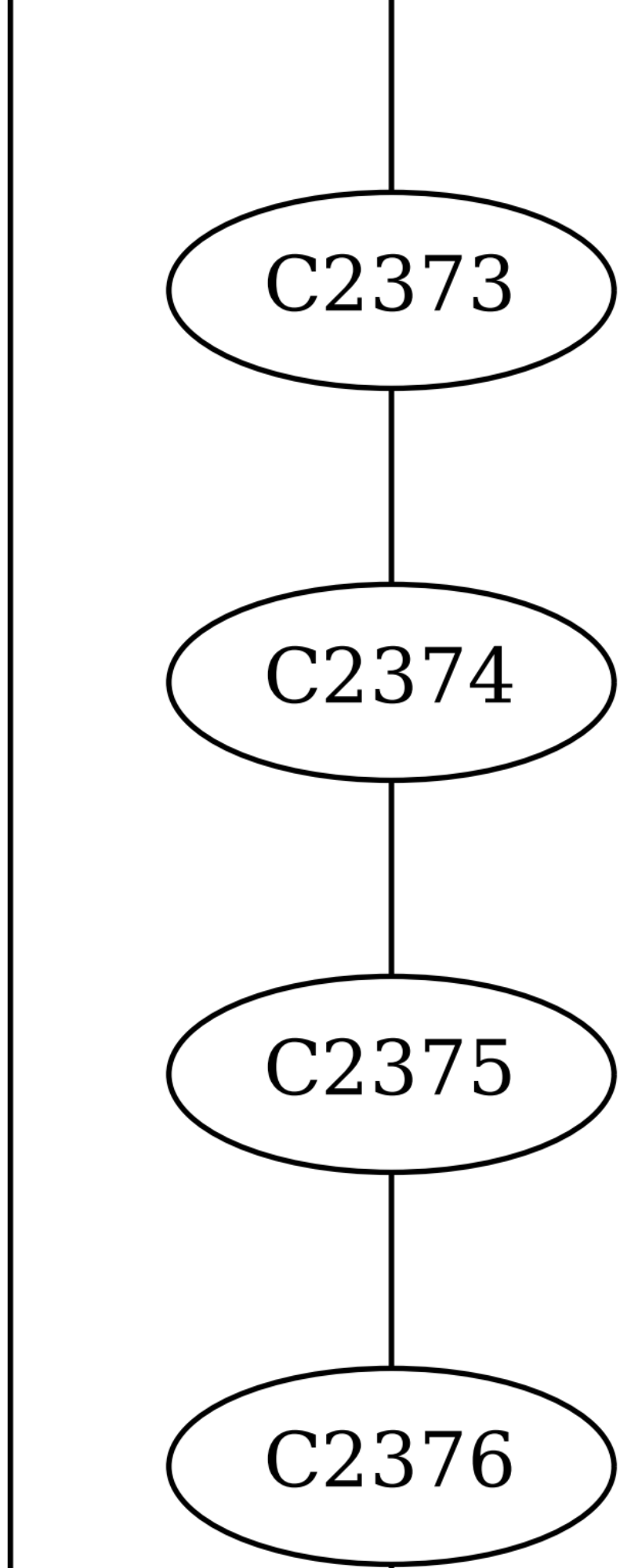
C2373
C2374
C2375
C2376

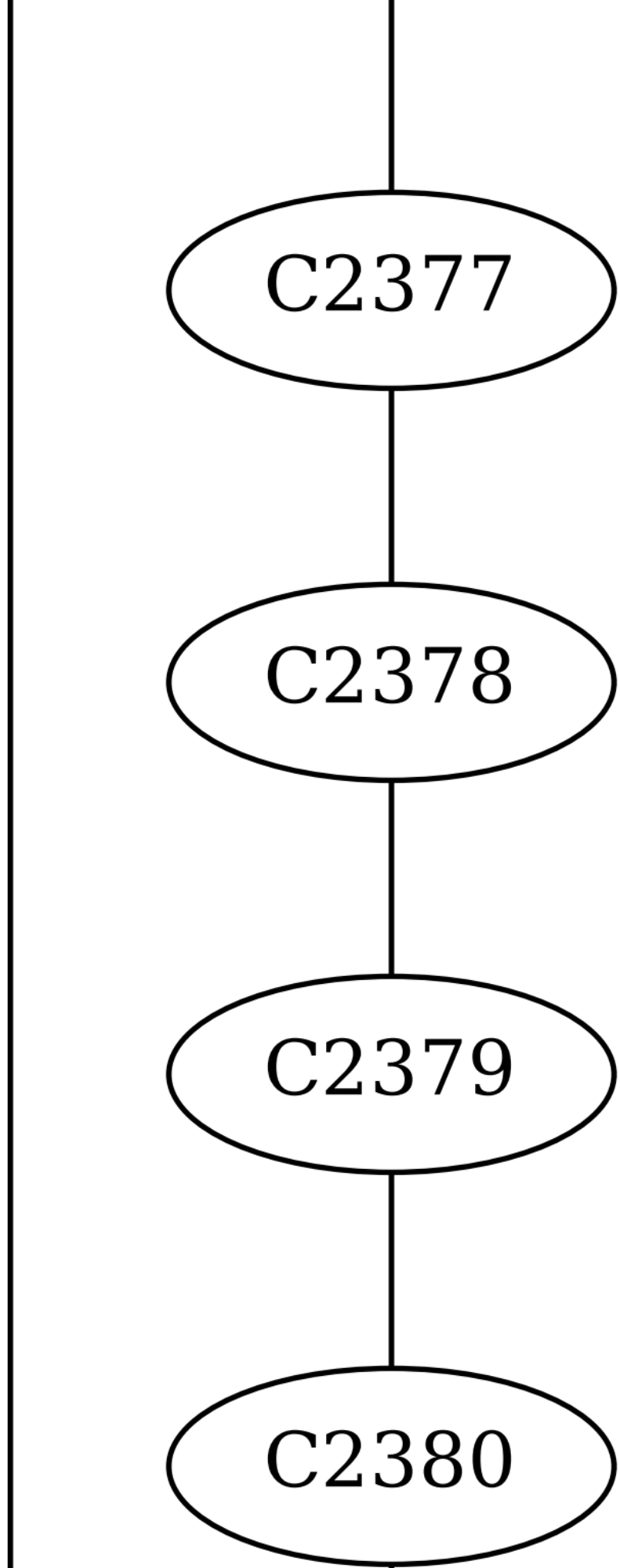
C2377
C2378
C2379
C2380

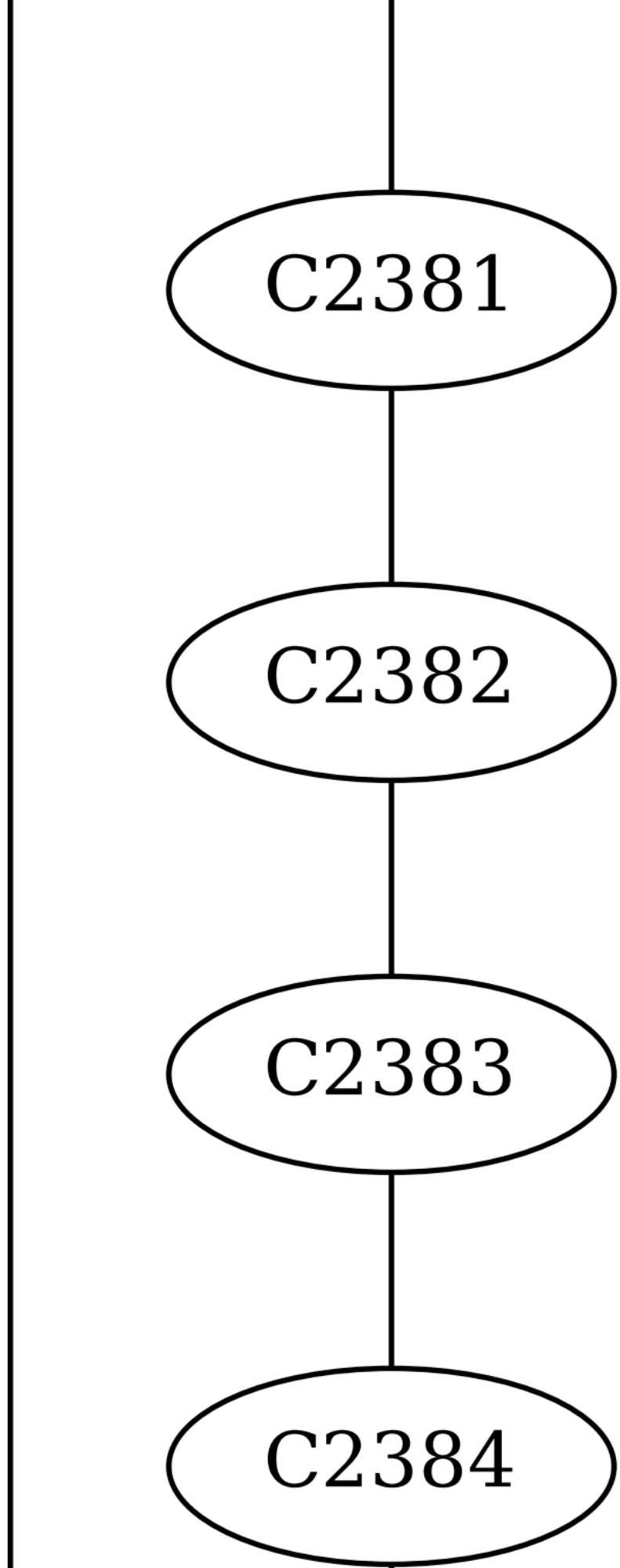
C2381
C2382
C2383
C2384

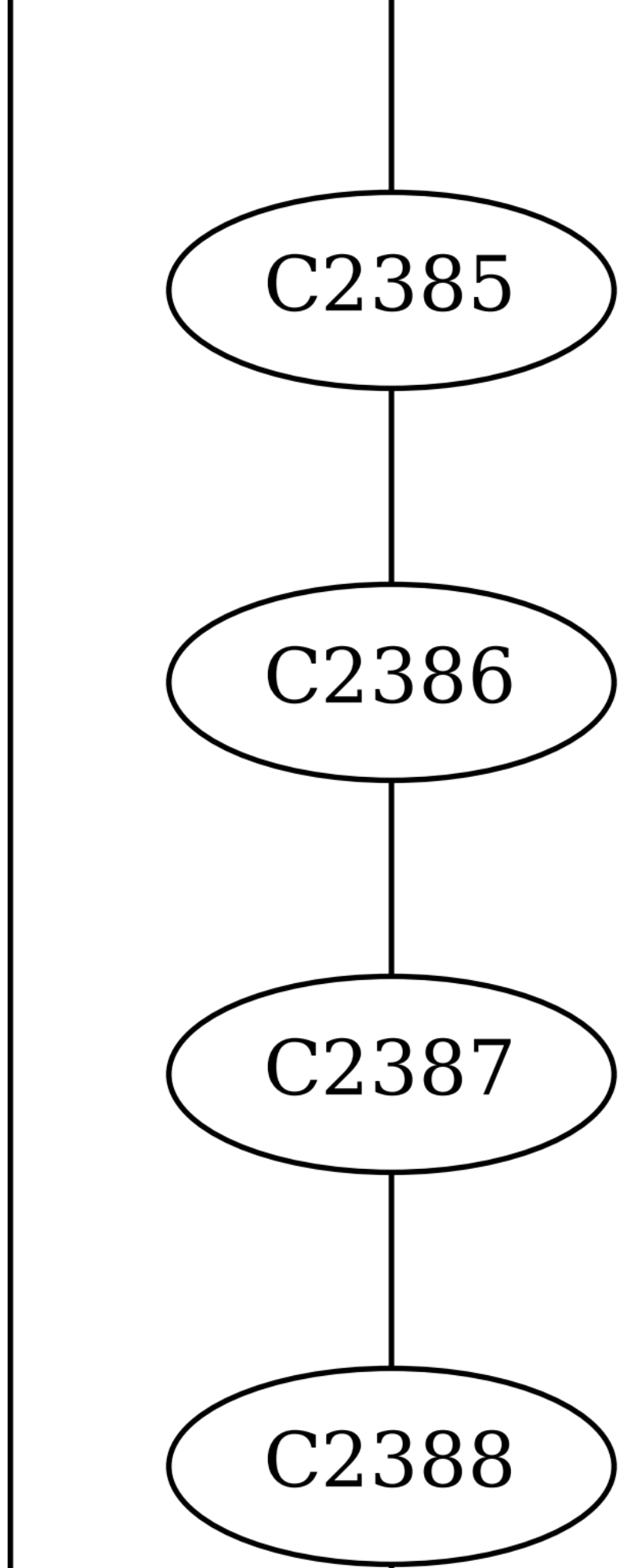
C2385
C2386
C2387
C2388

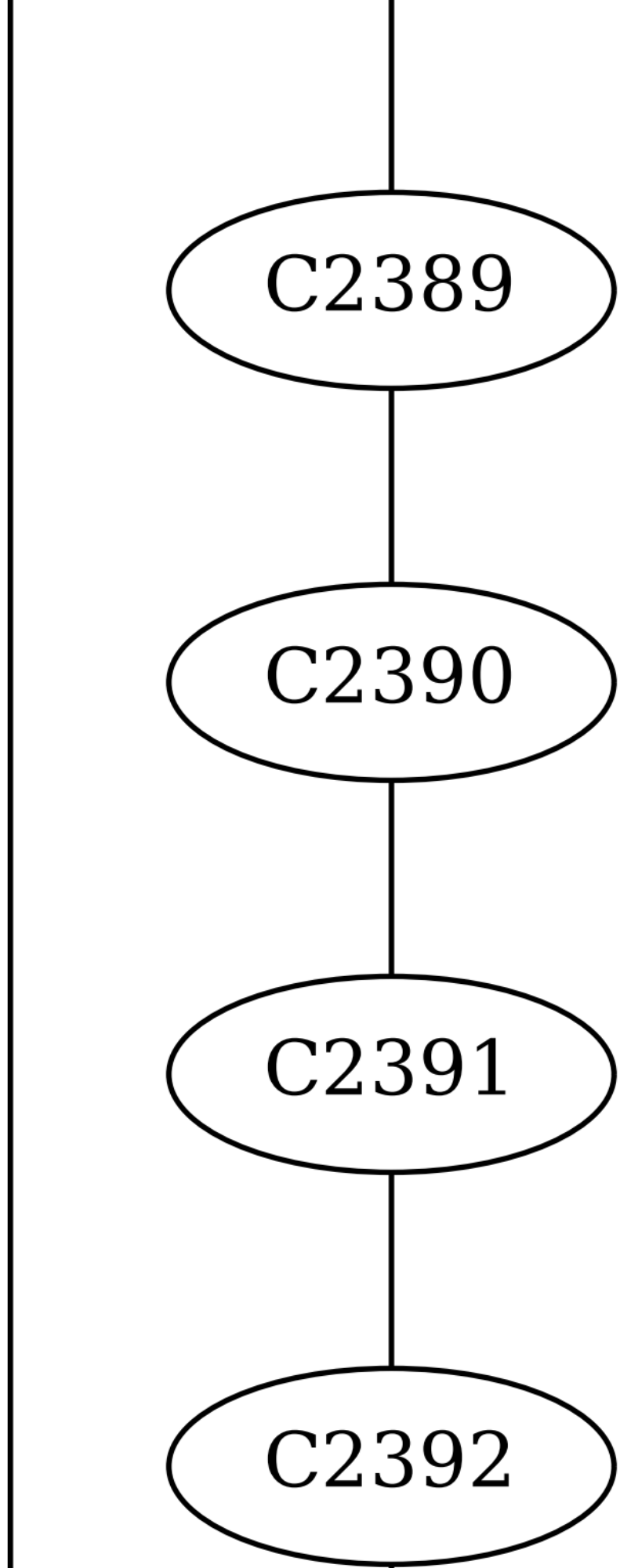
C2389
C2390
C2391
C2392

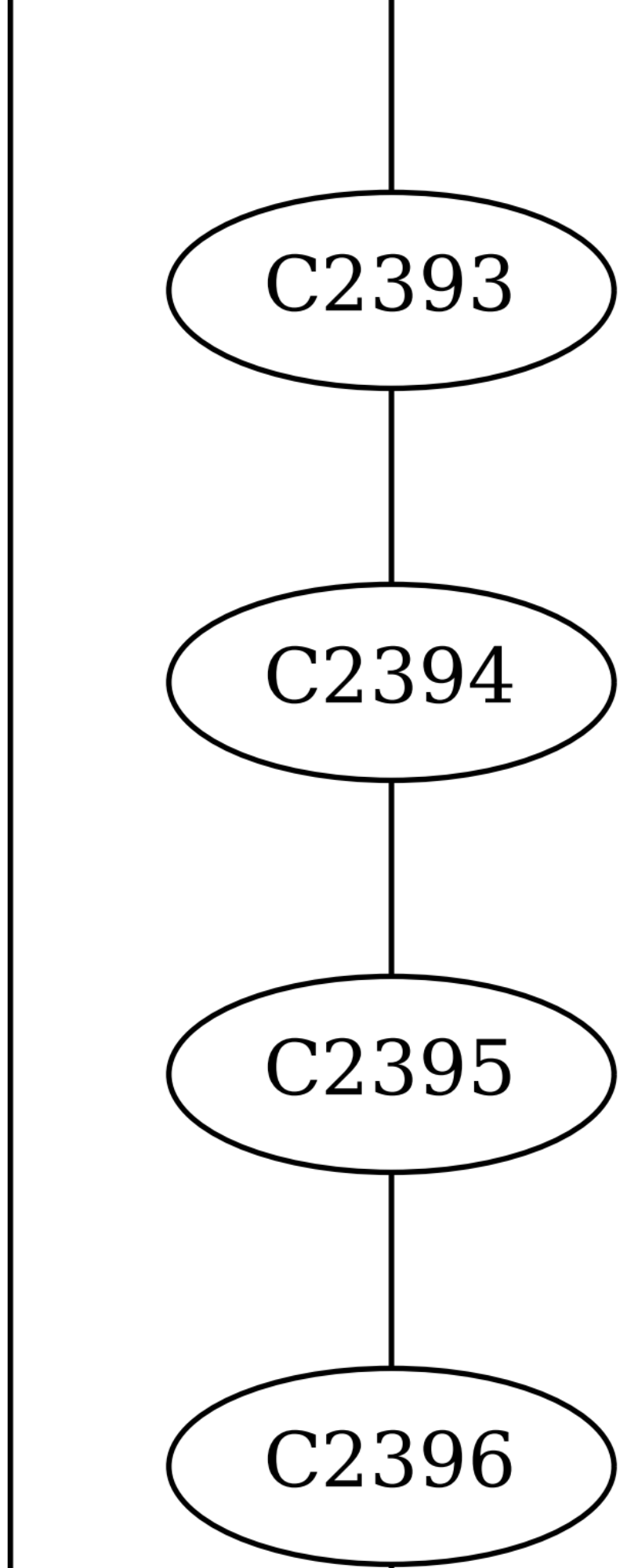
C2393
C2394
C2395
C2396

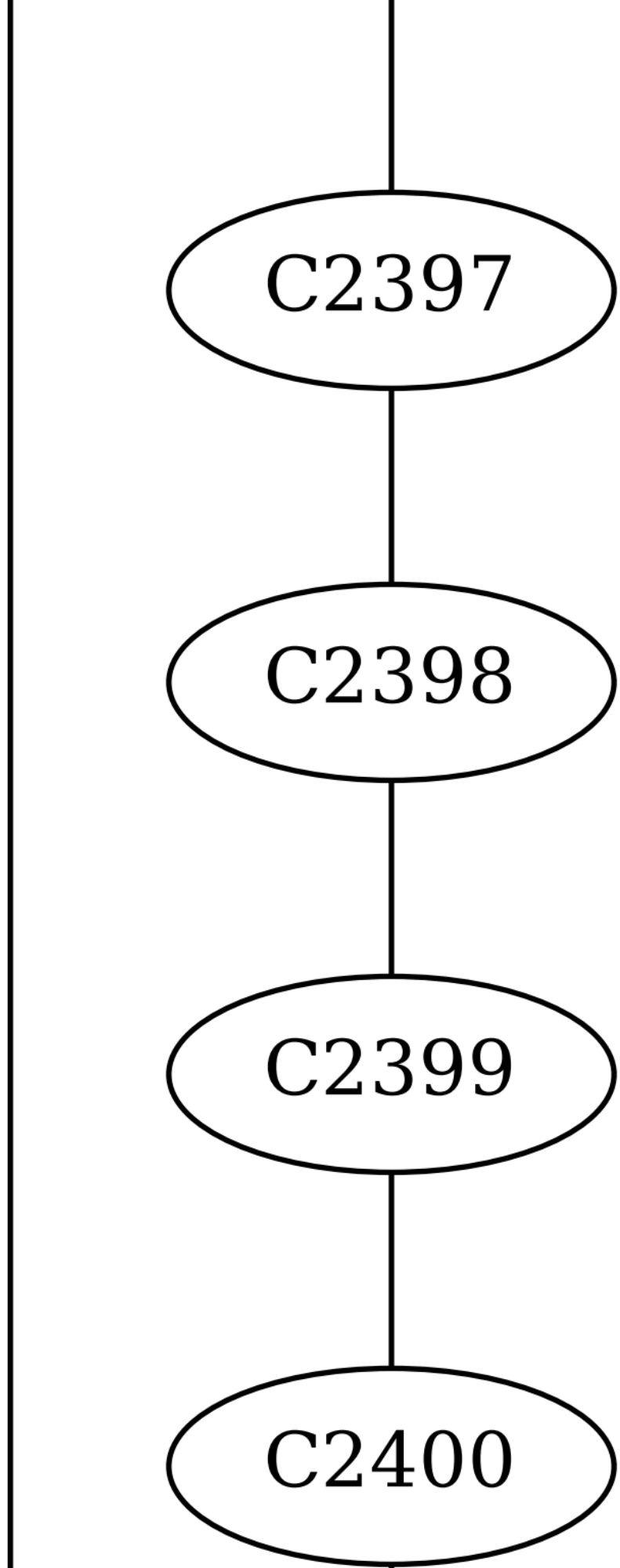
C2397
C2398
C2399
C2400

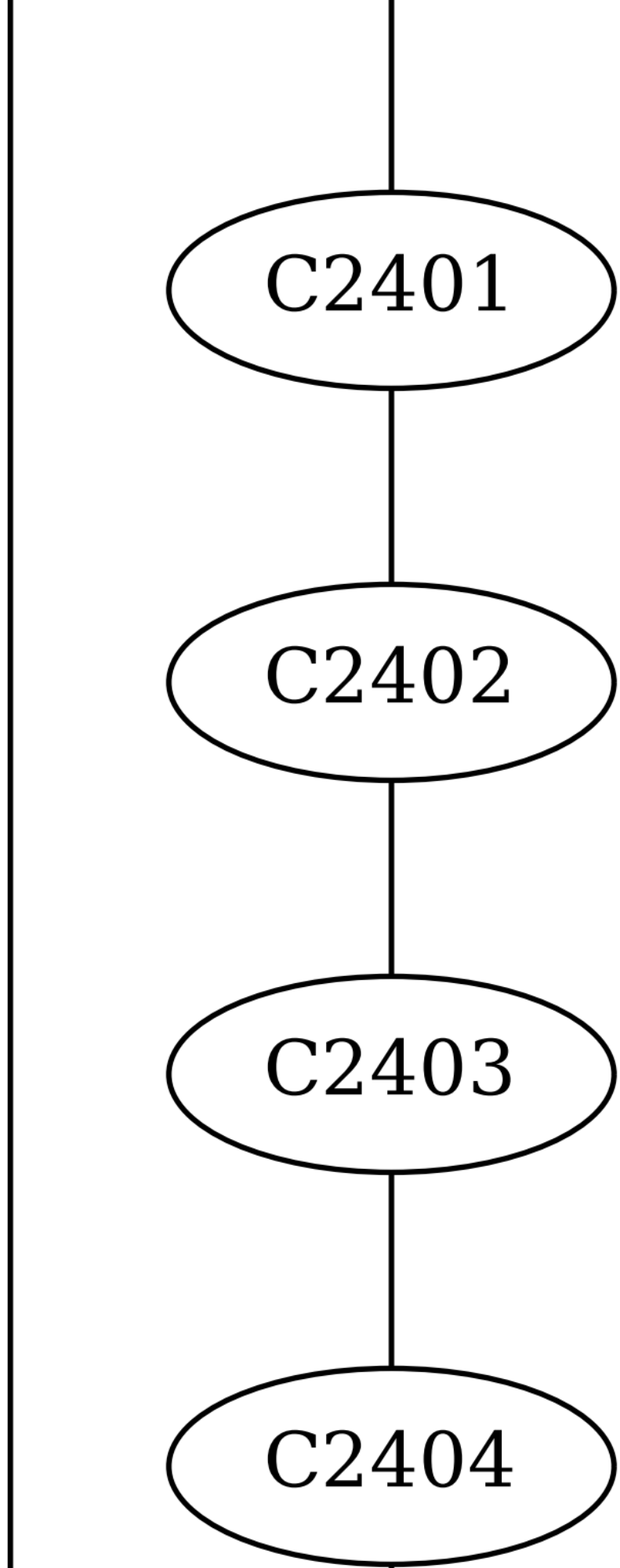
C2401
C2402
C2403
C2404

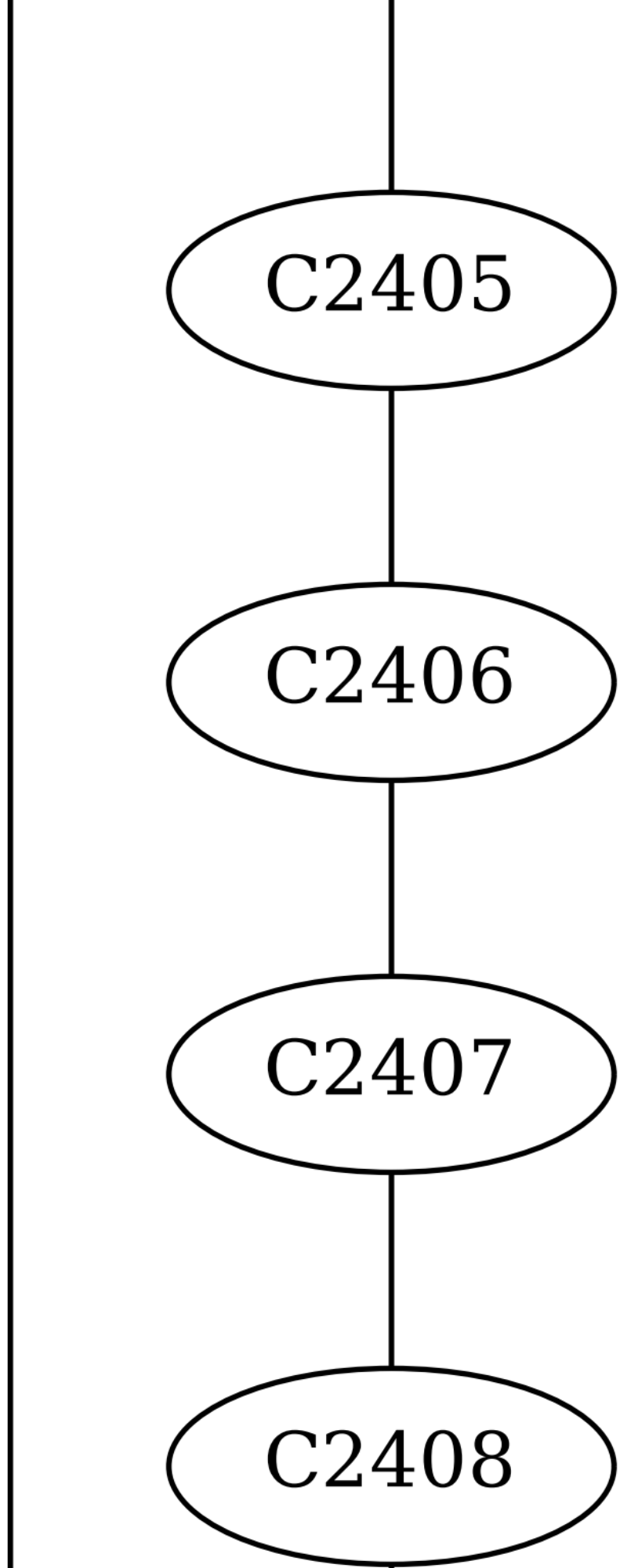
C2405
C2406
C2407
C2408

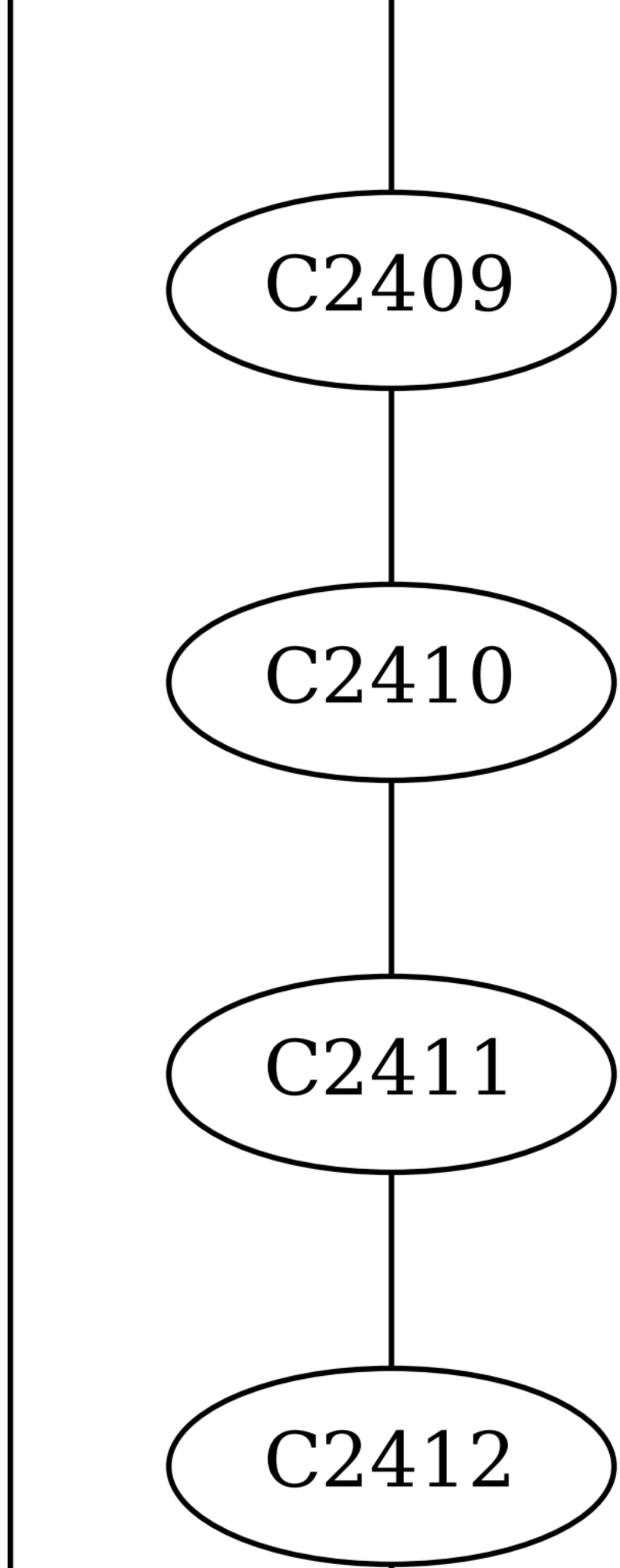
C2409
C2410
C2411
C2412

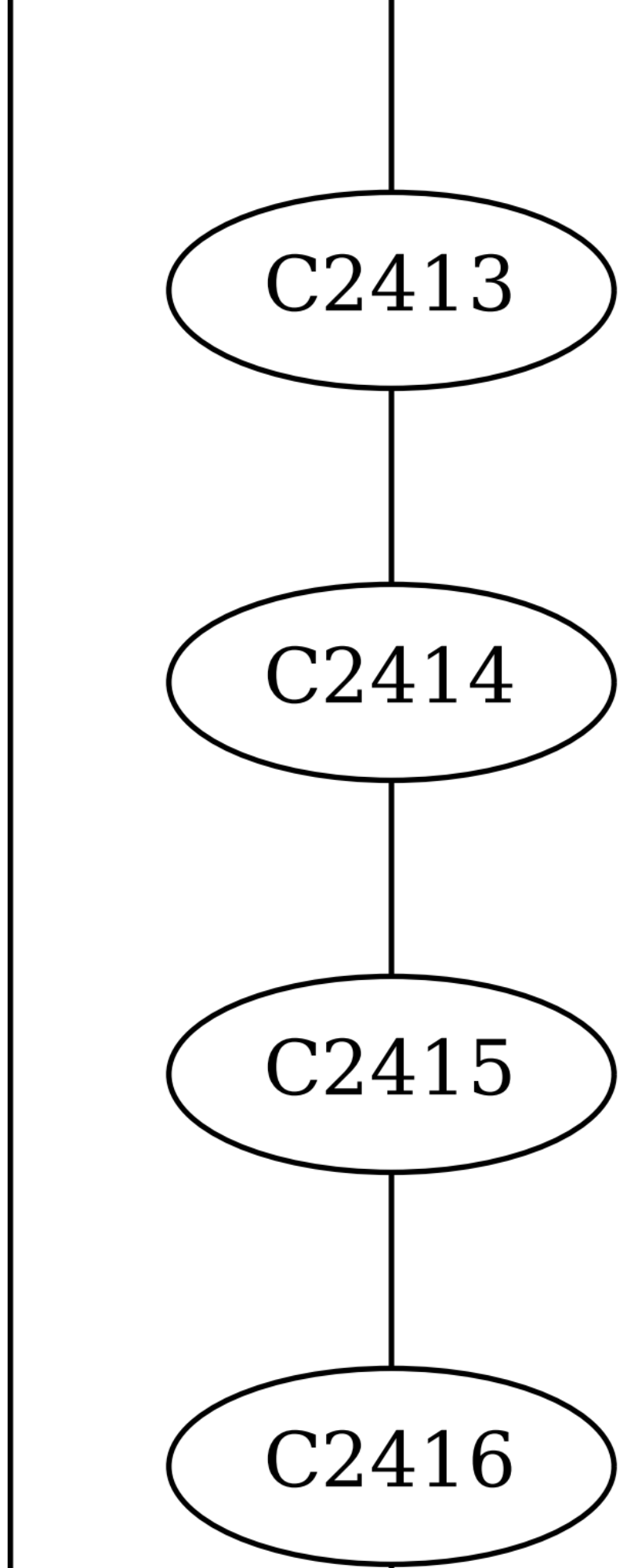
C2413
C2414
C2415
C2416

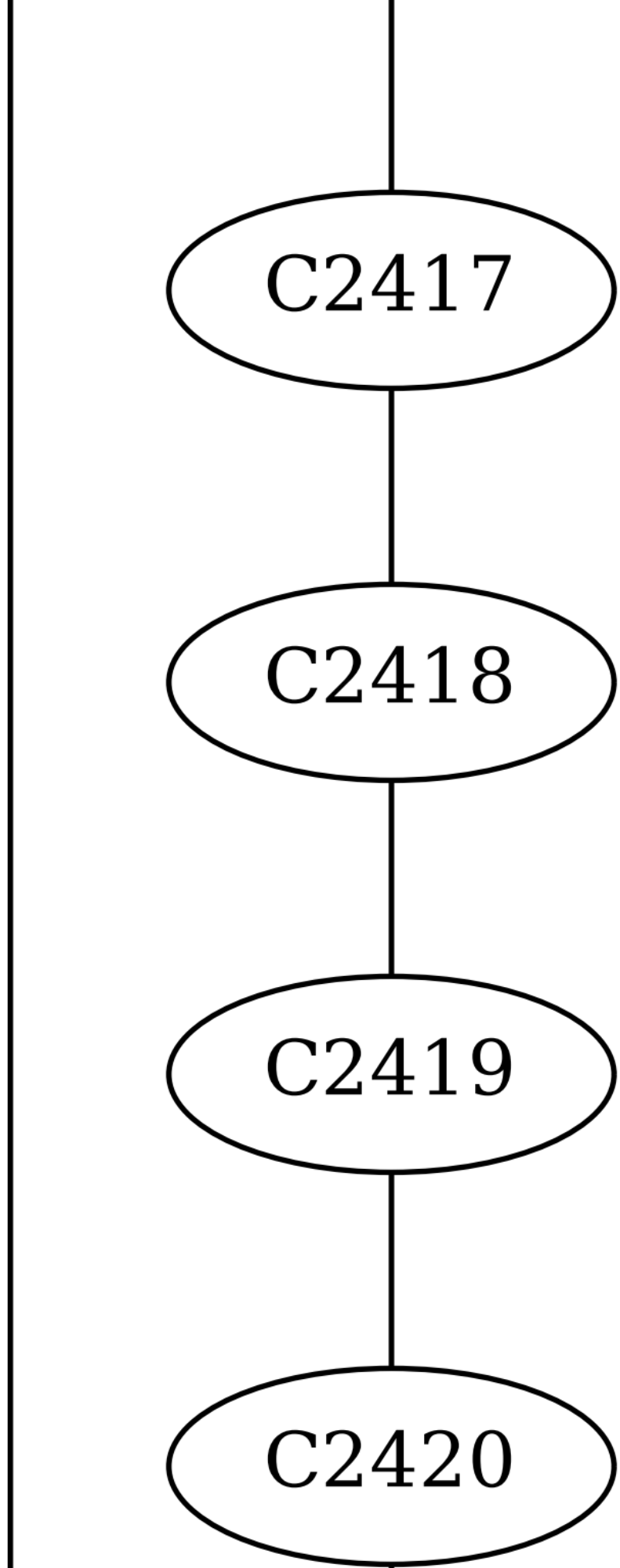
C2417
C2418
C2419
C2420

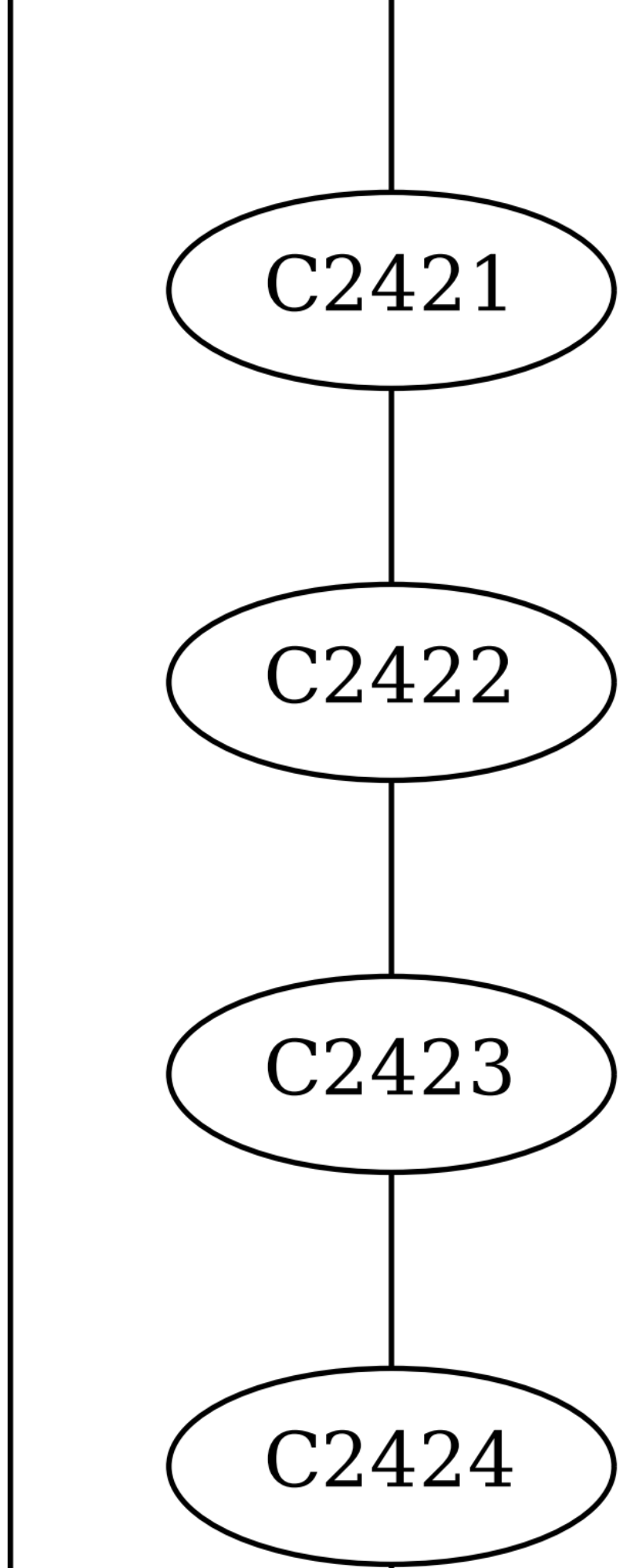
C2421
C2422
C2423
C2424

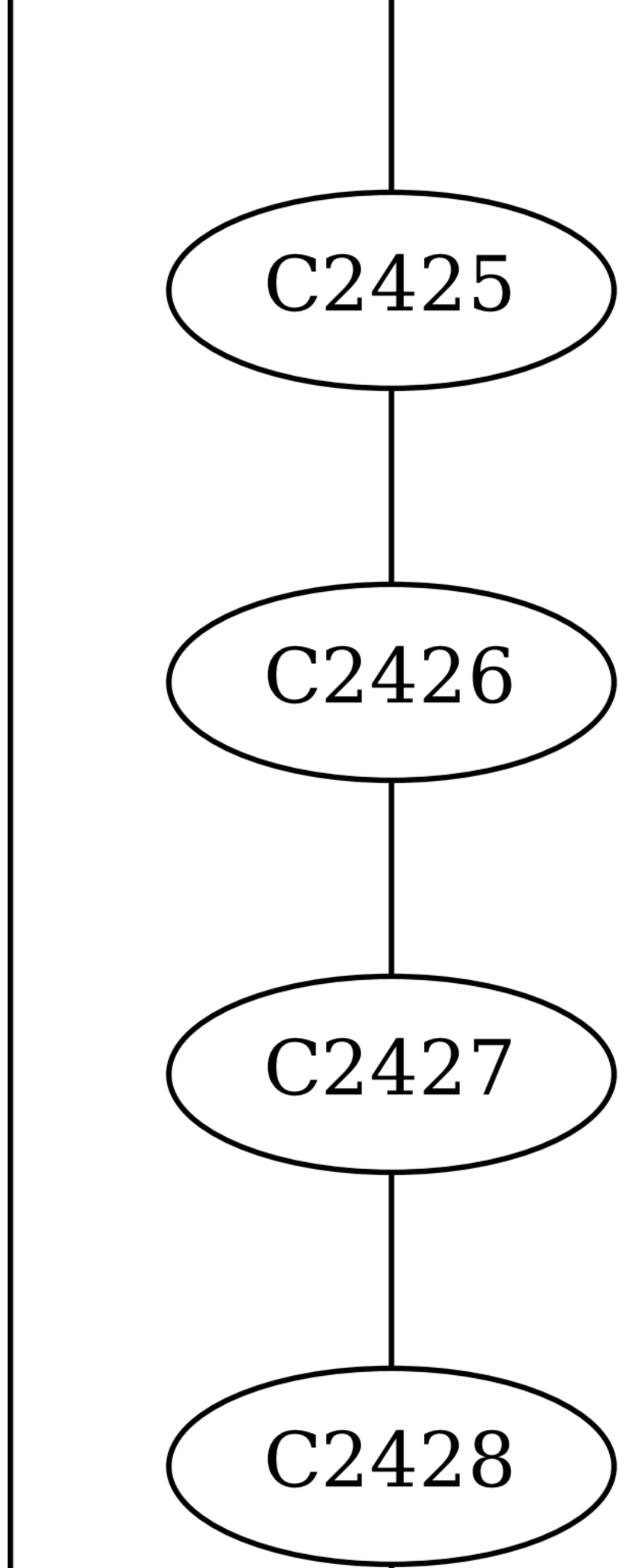
C2425
C2426
C2427
C2428

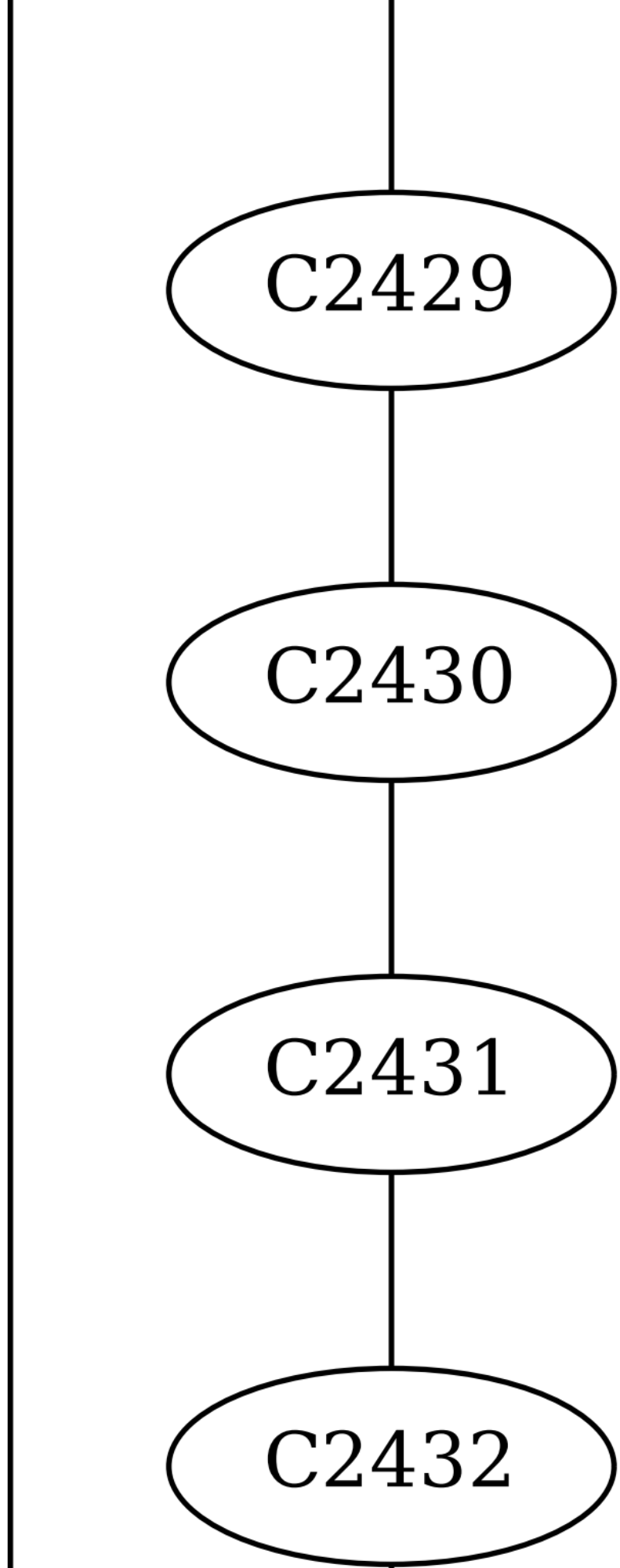
C2429
C2430
C2431
C2432

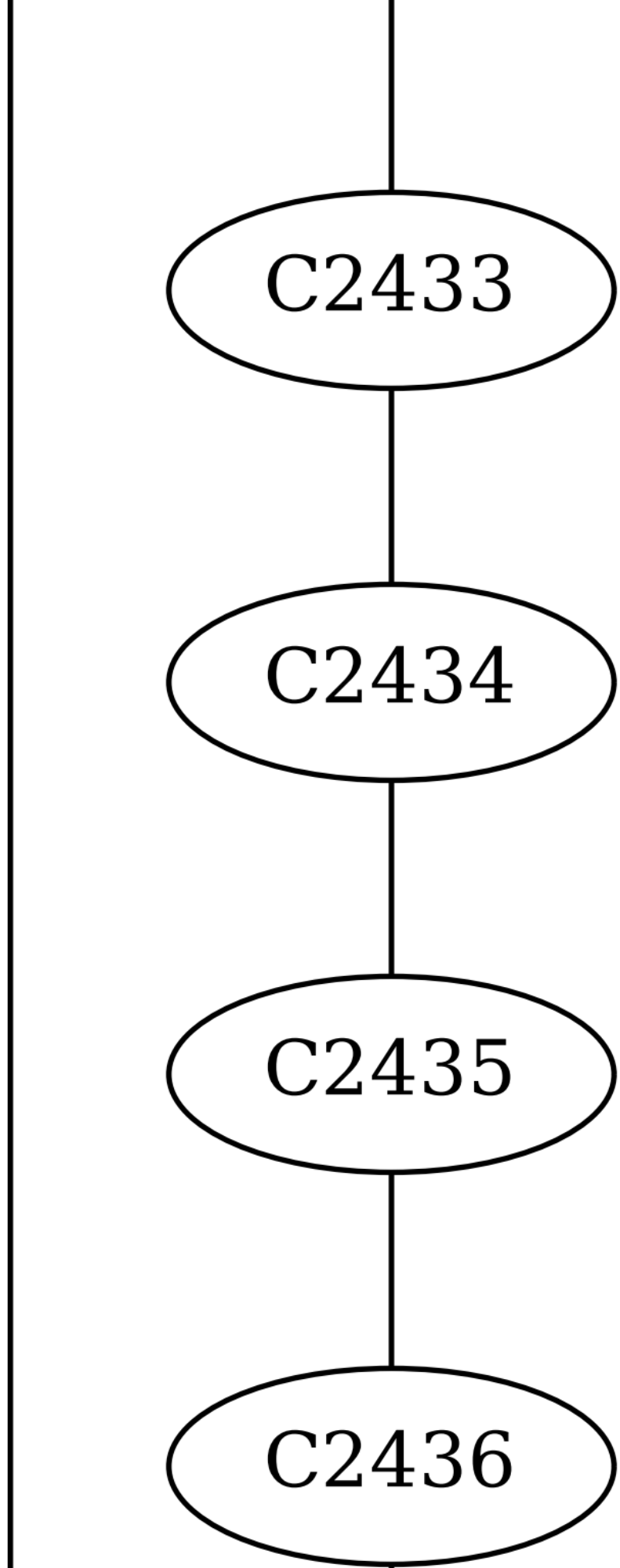
C2433
C2434
C2435
C2436

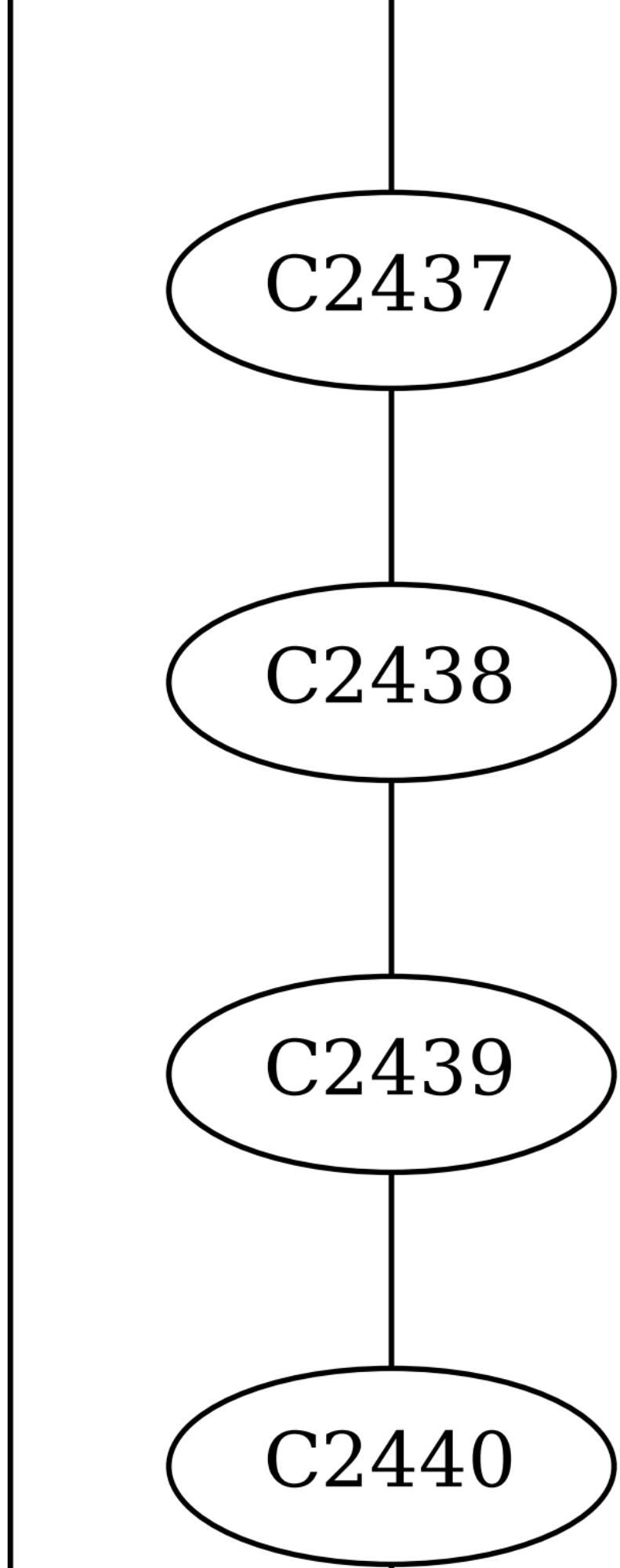
C2437
C2438
C2439
C2440

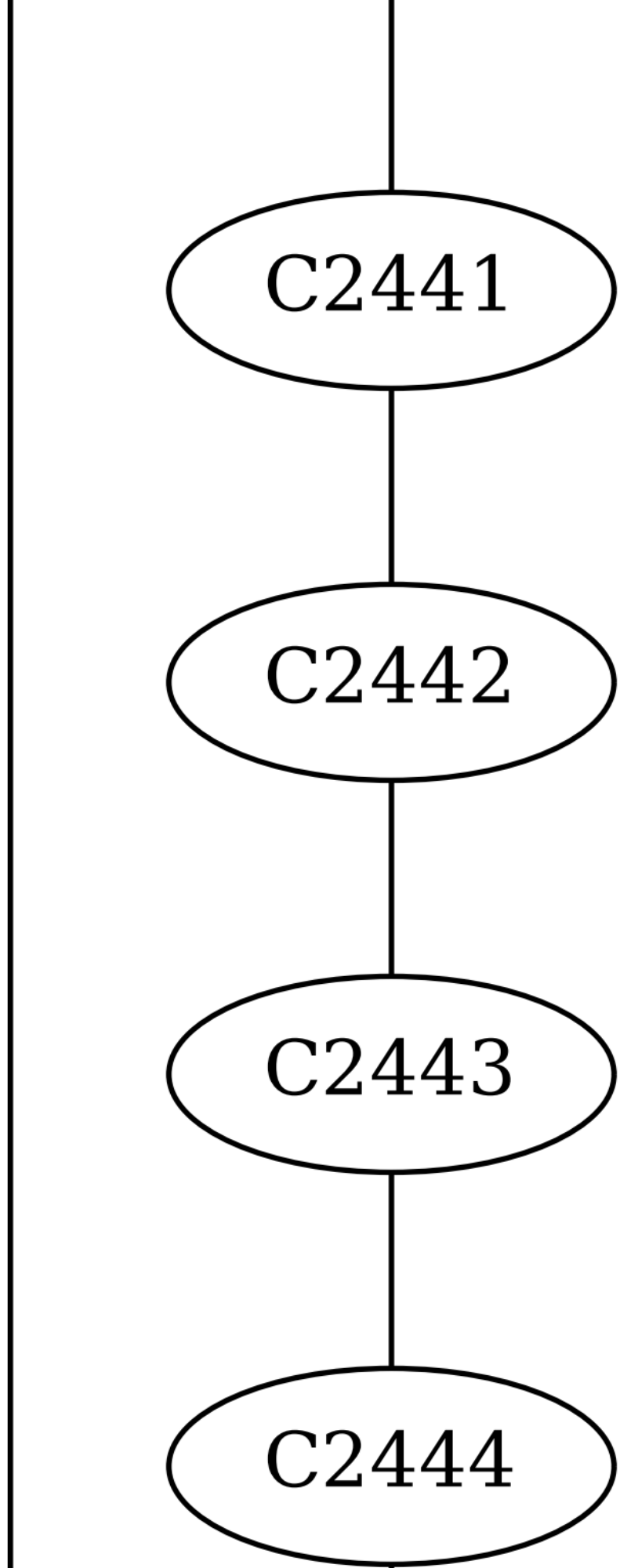
C2441
C2442
C2443
C2444

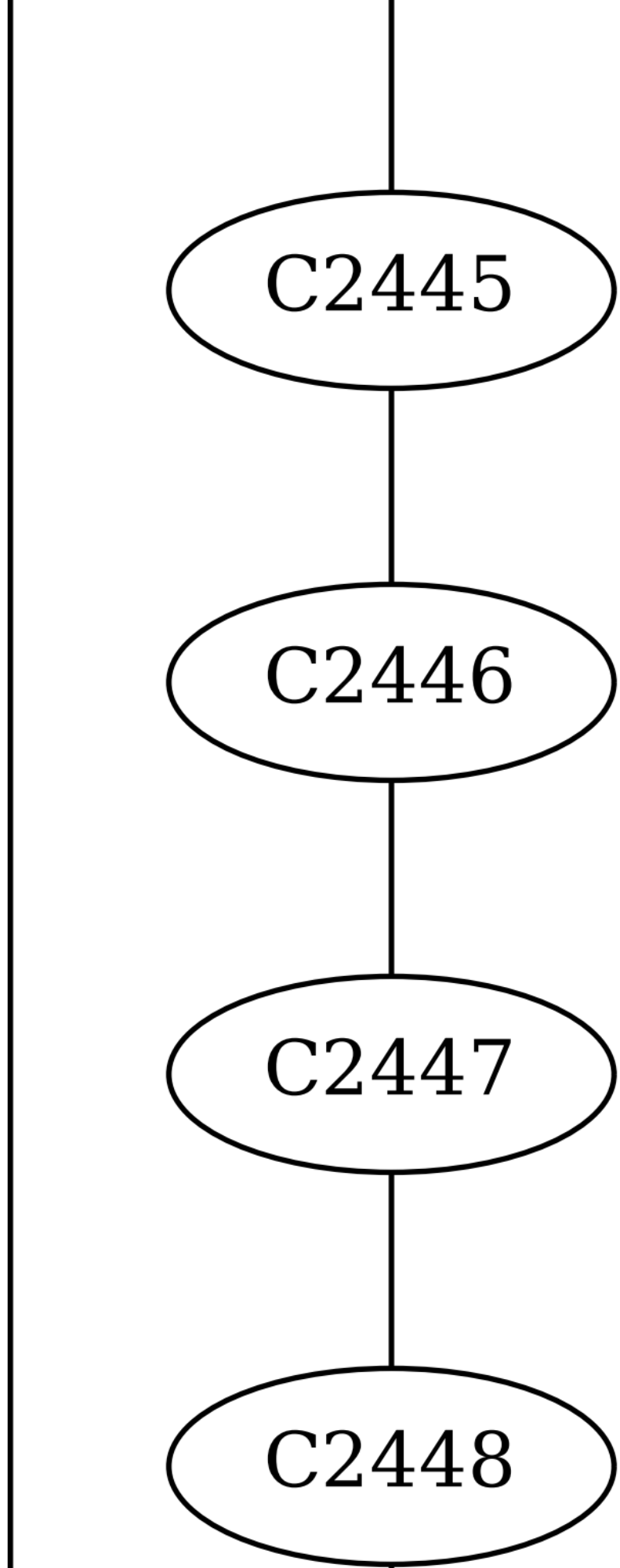
C2445
C2446
C2447
C2448

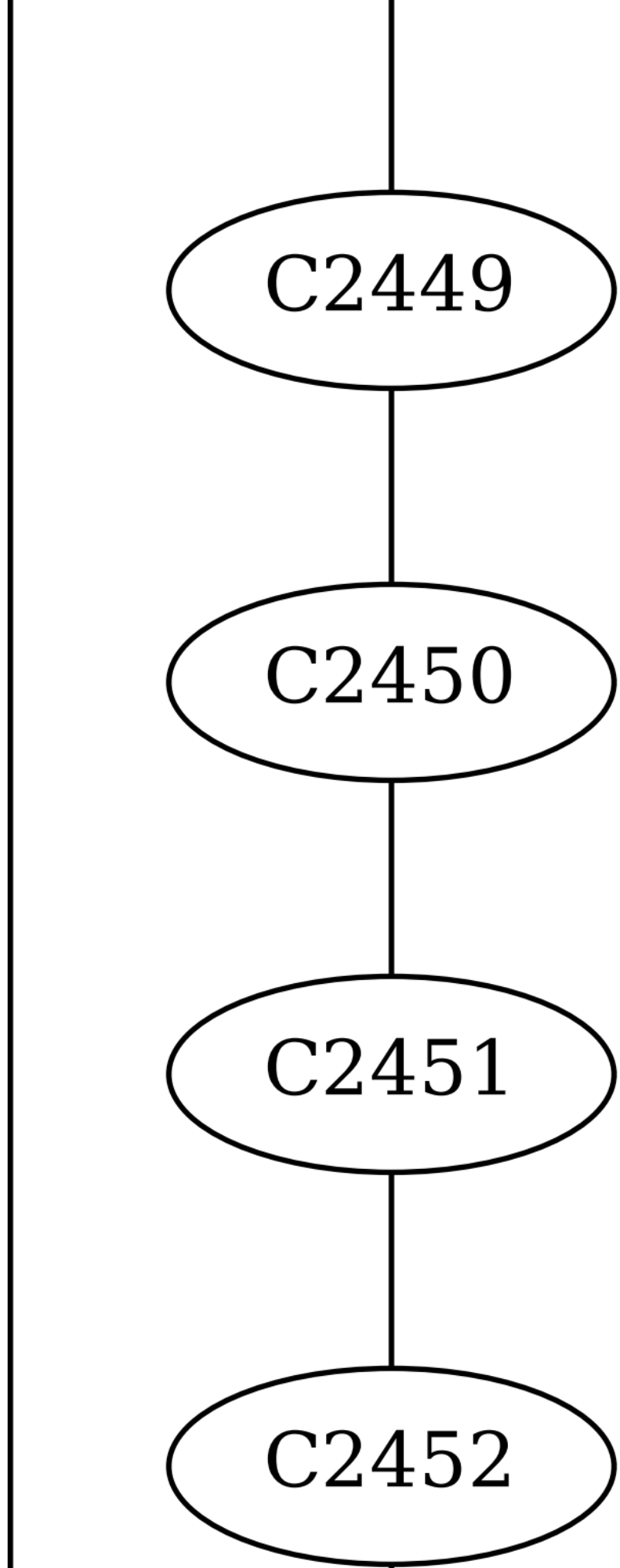
C2449
C2450
C2451
C2452

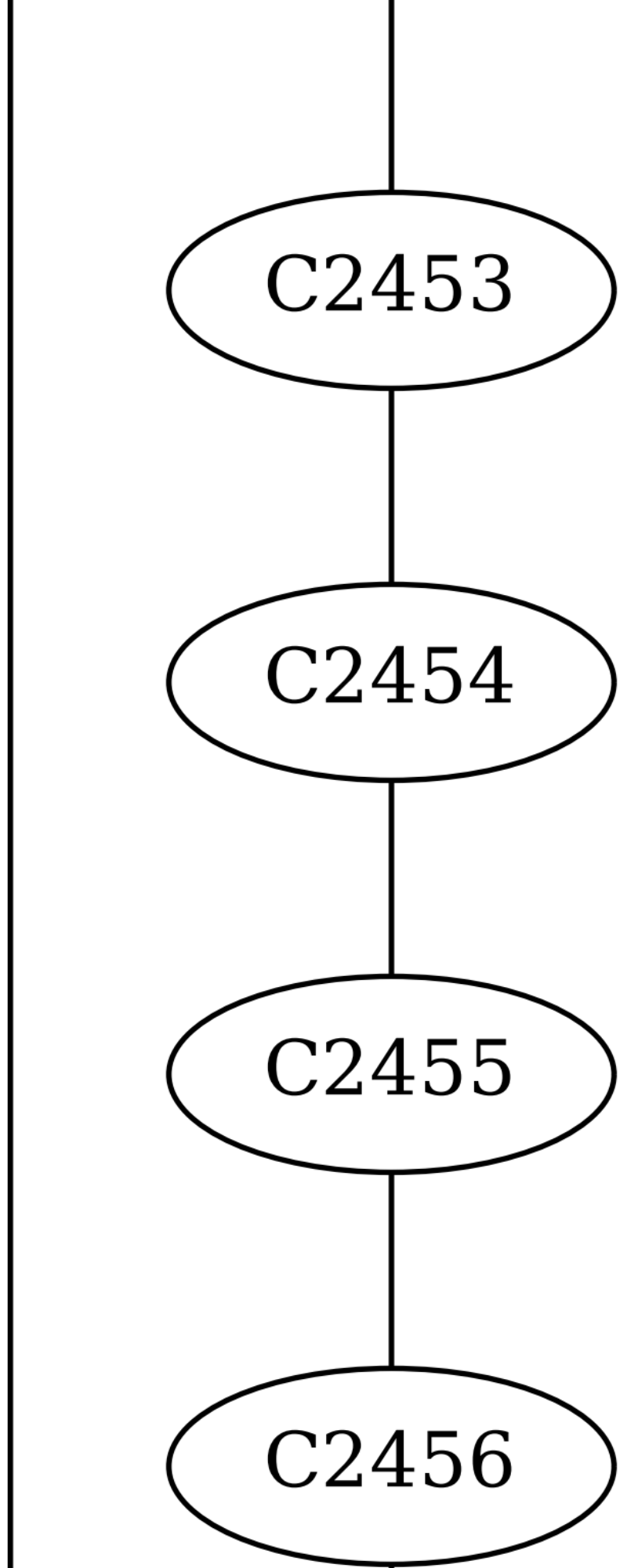
C2453
C2454
C2455
C2456

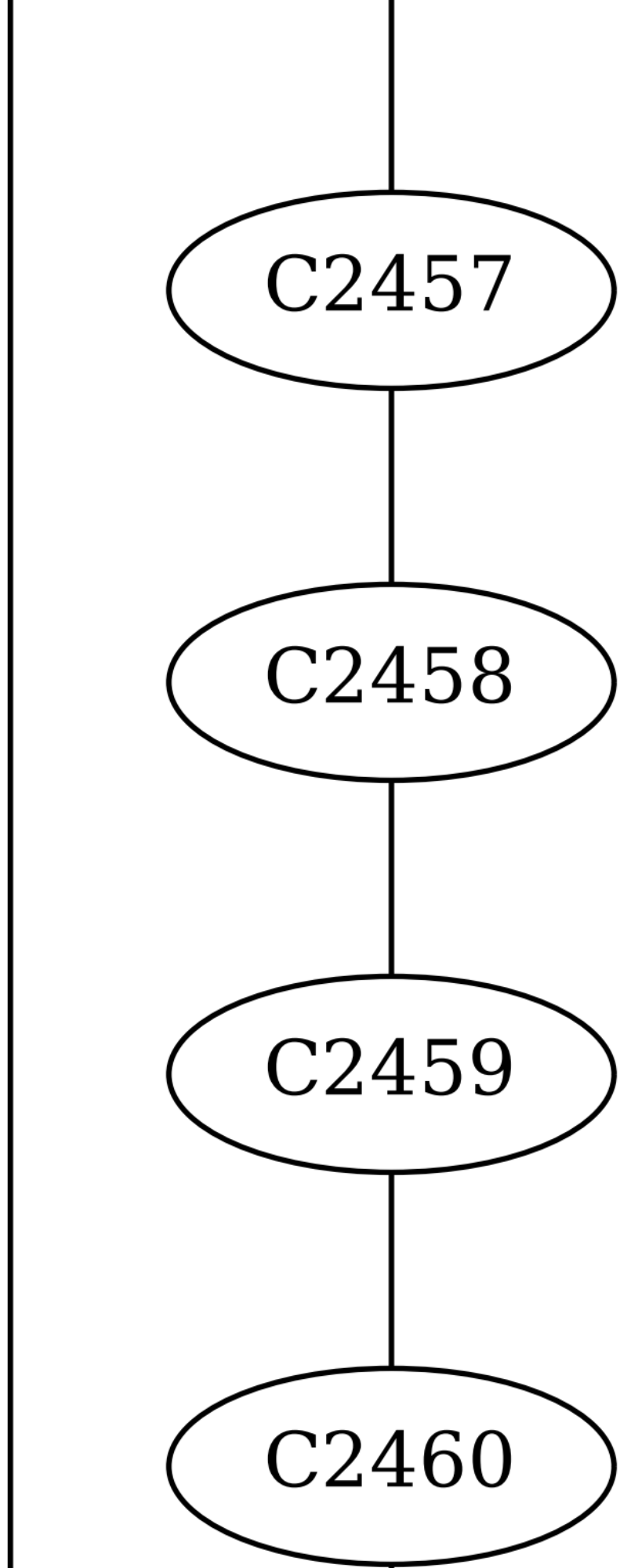
C2457
C2458
C2459
C2460

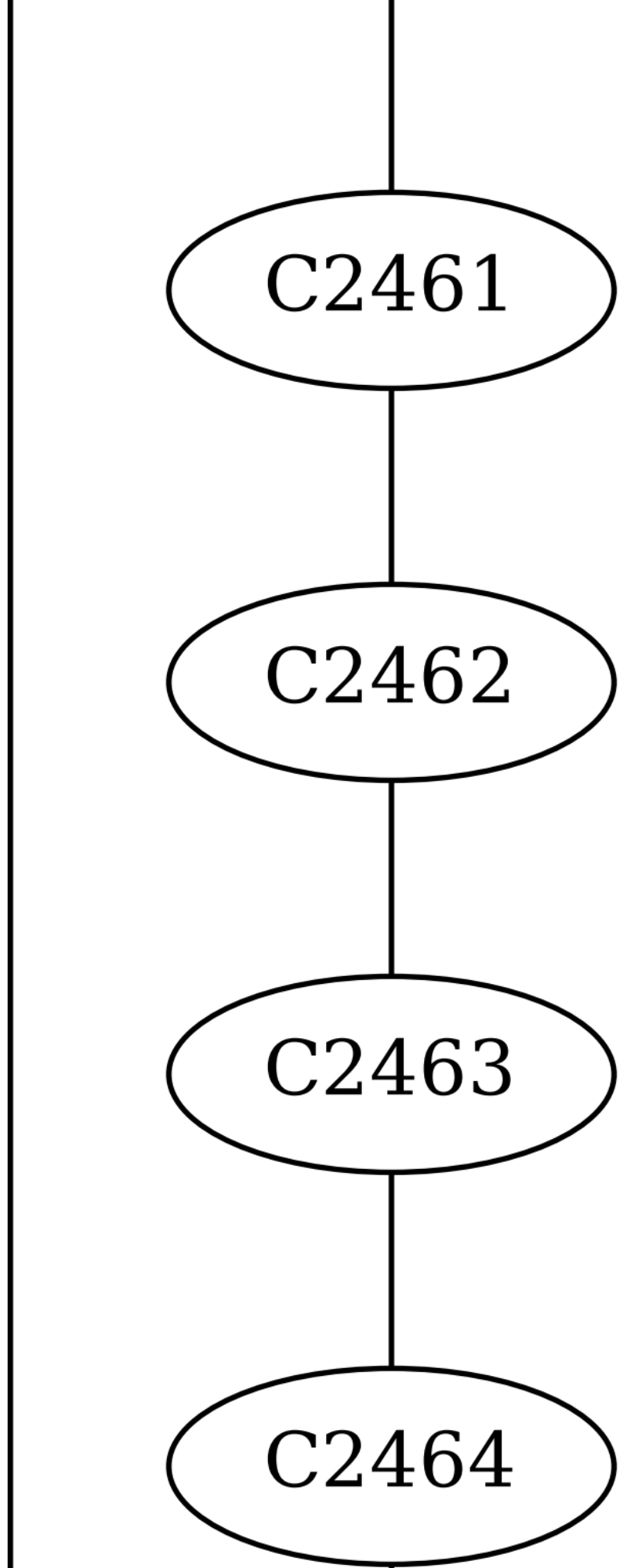
C2461
C2462
C2463
C2464

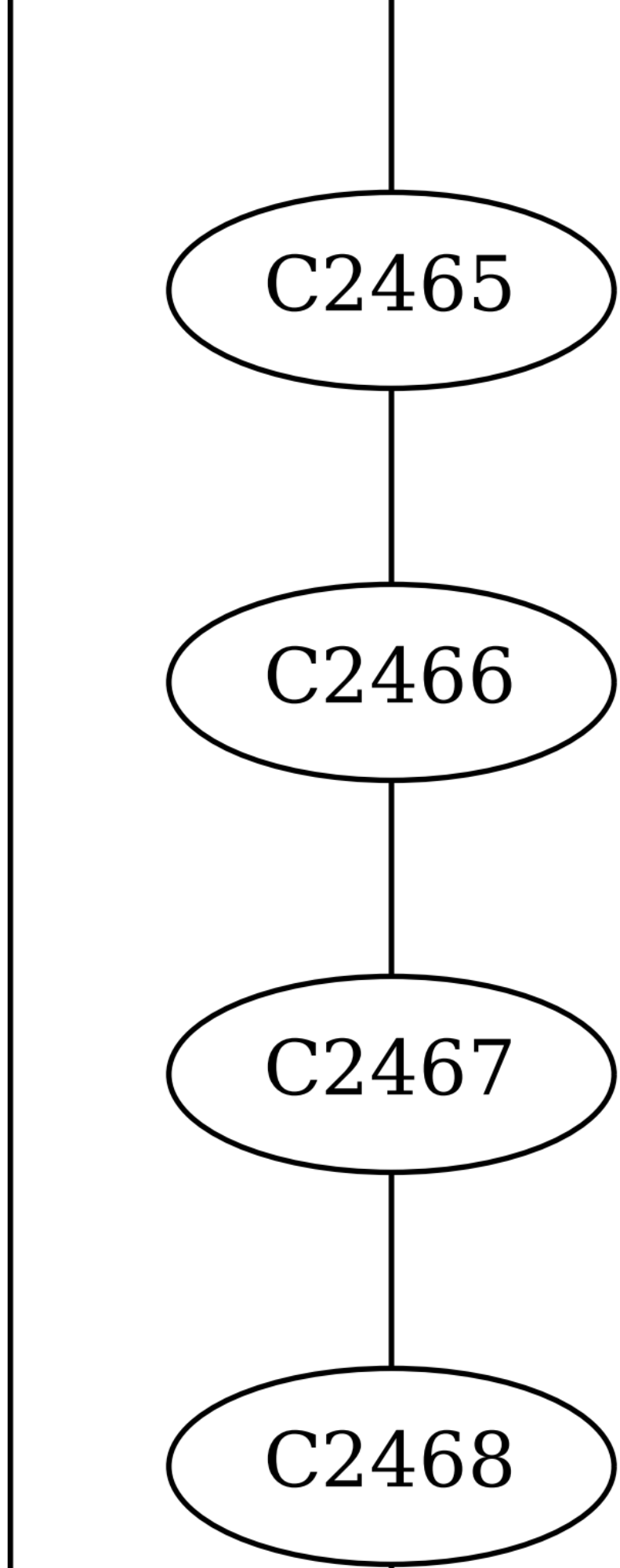
C2465
C2466
C2467
C2468

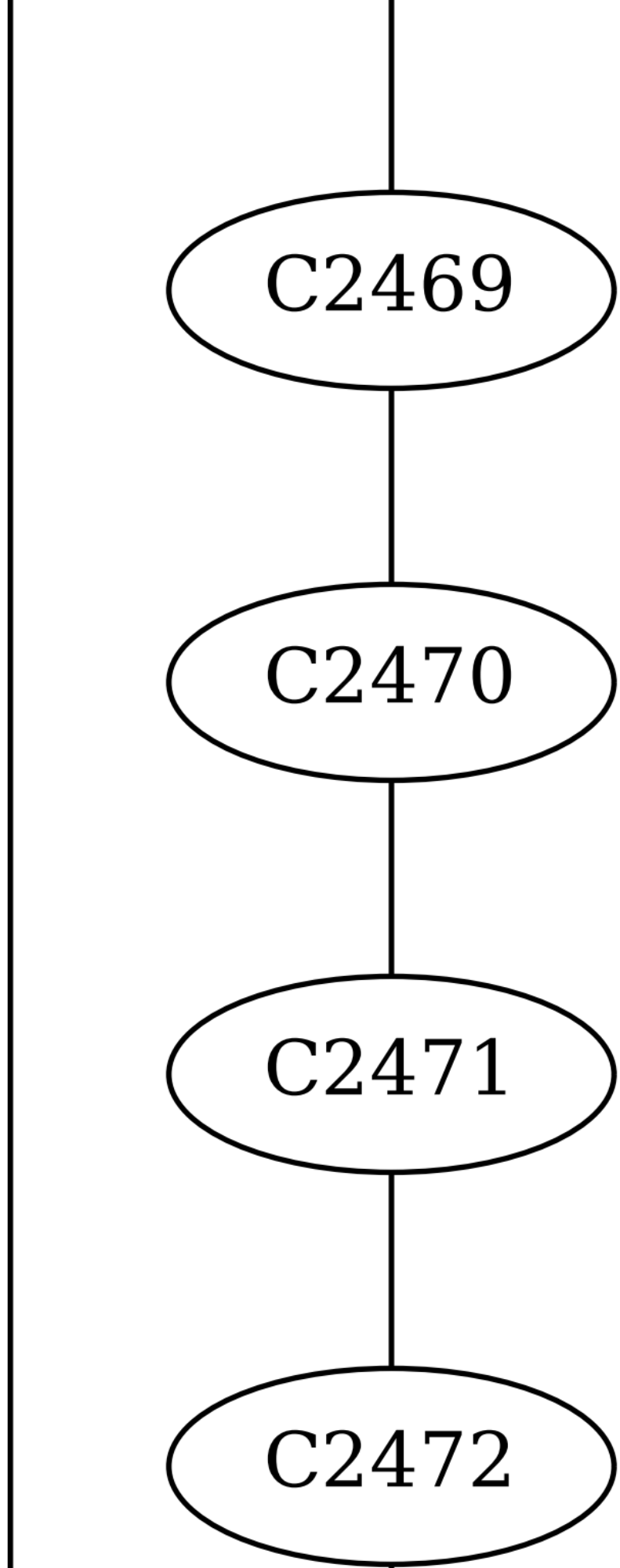
C2469
C2470
C2471
C2472

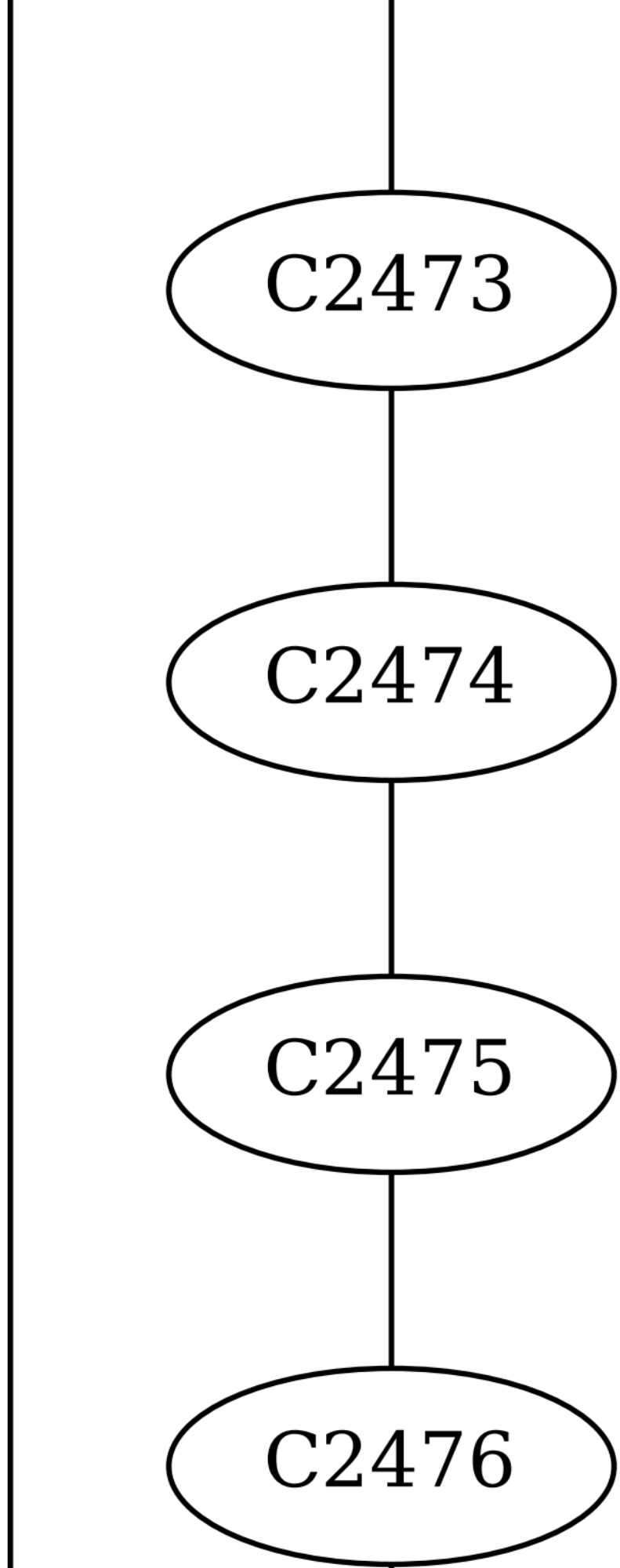
C2473
C2474
C2475
C2476

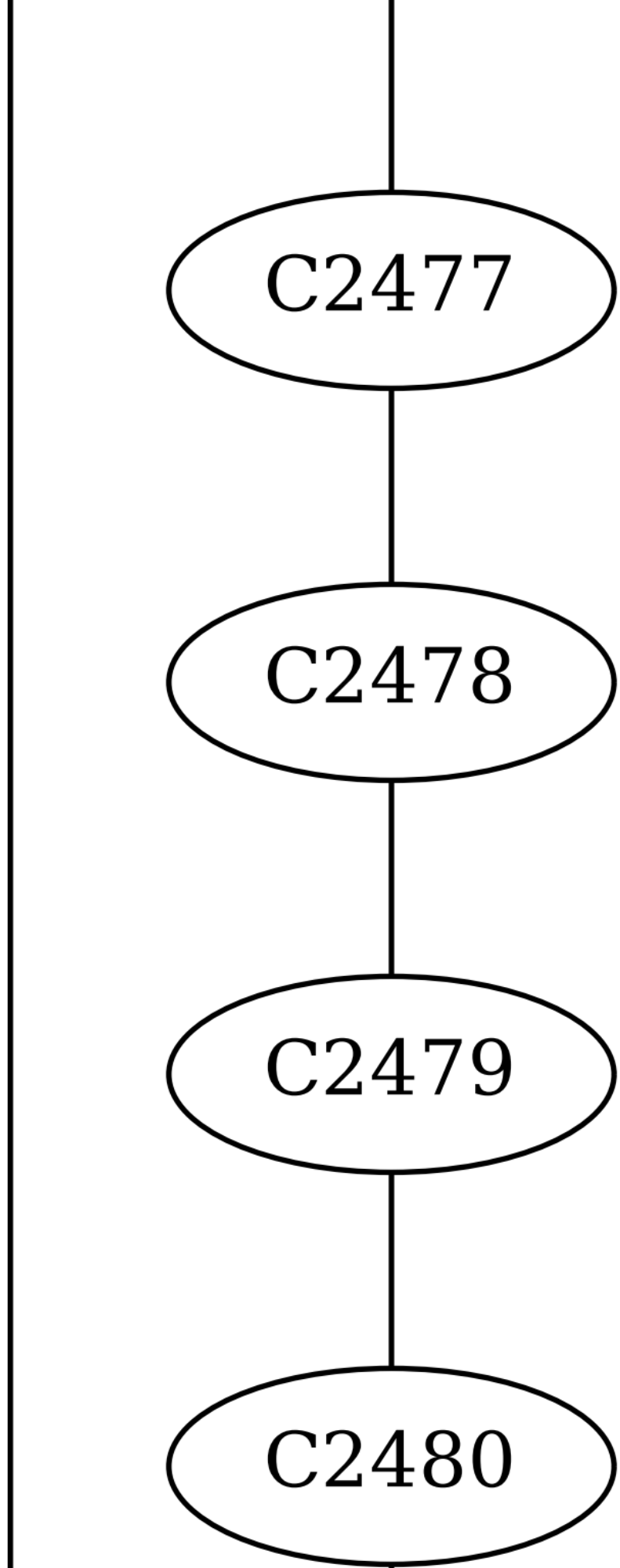
C2477
C2478
C2479
C2480

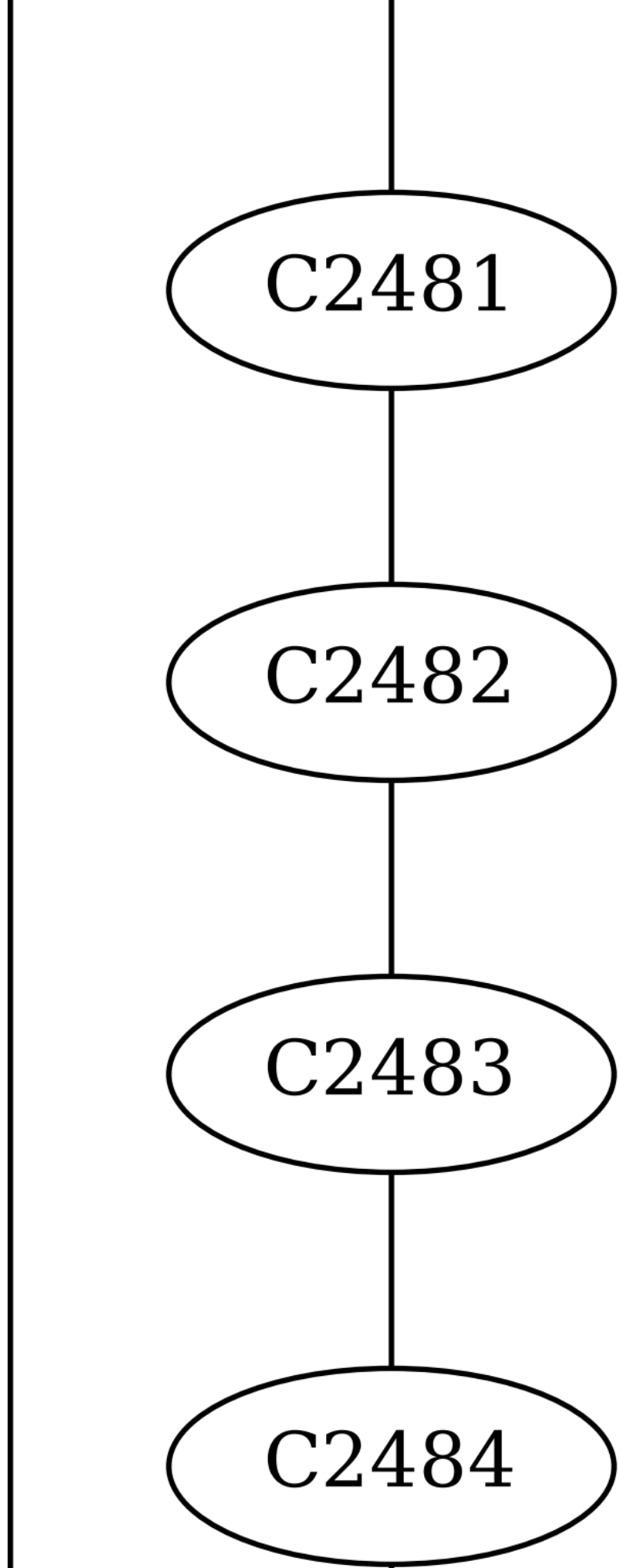
C2481
C2482
C2483
C2484

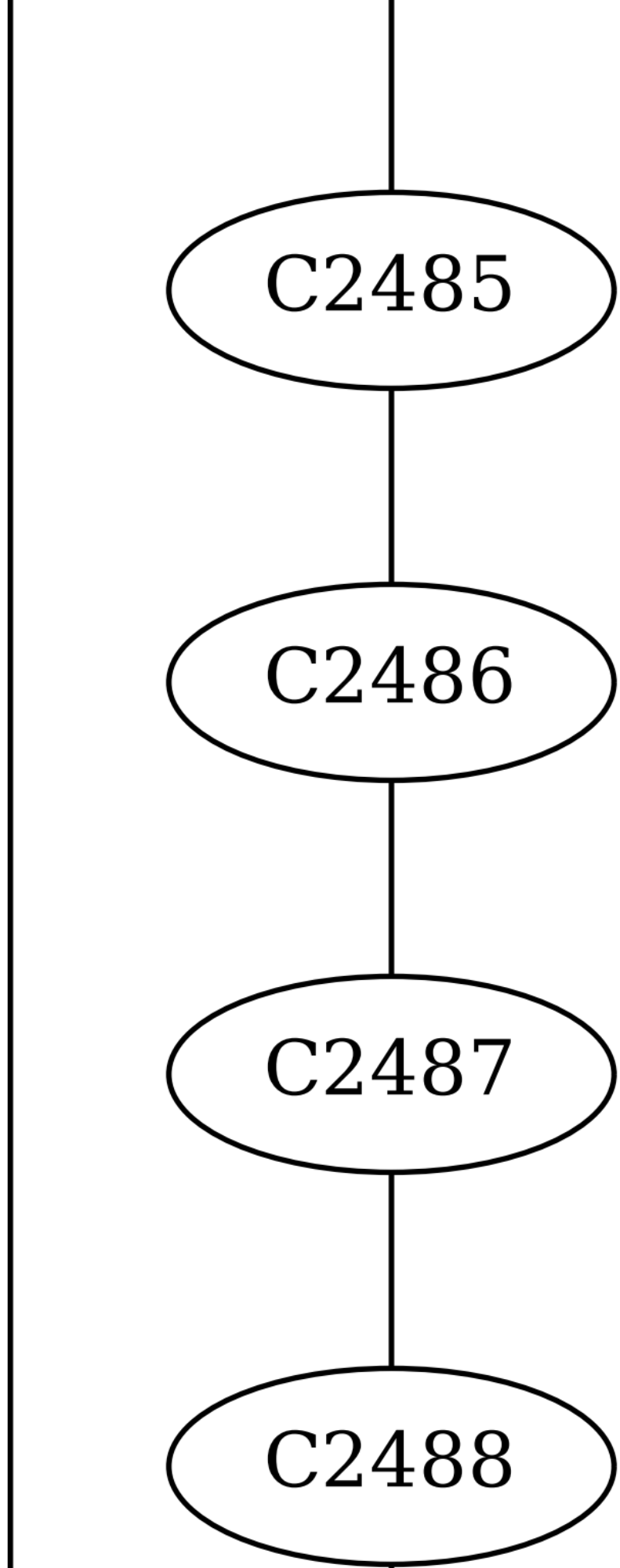
C2485
C2486
C2487
C2488

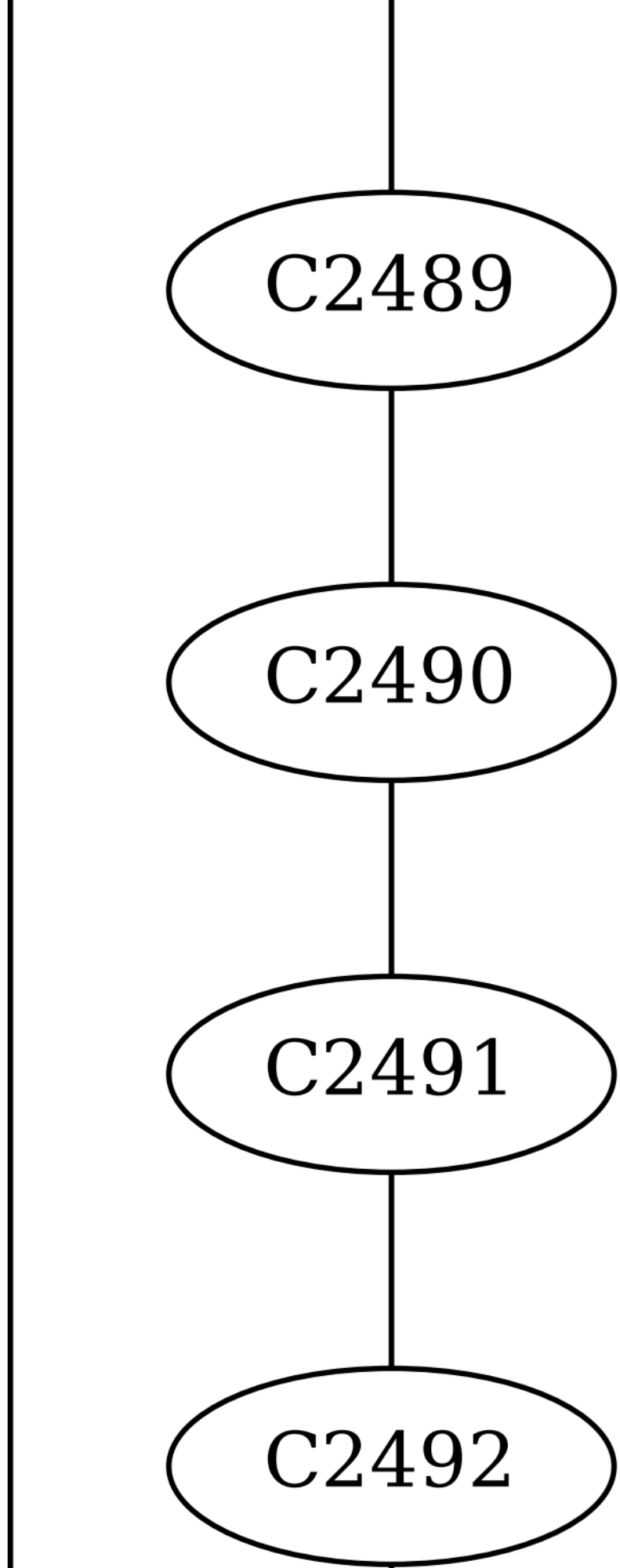
C2489
C2490
C2491
C2492

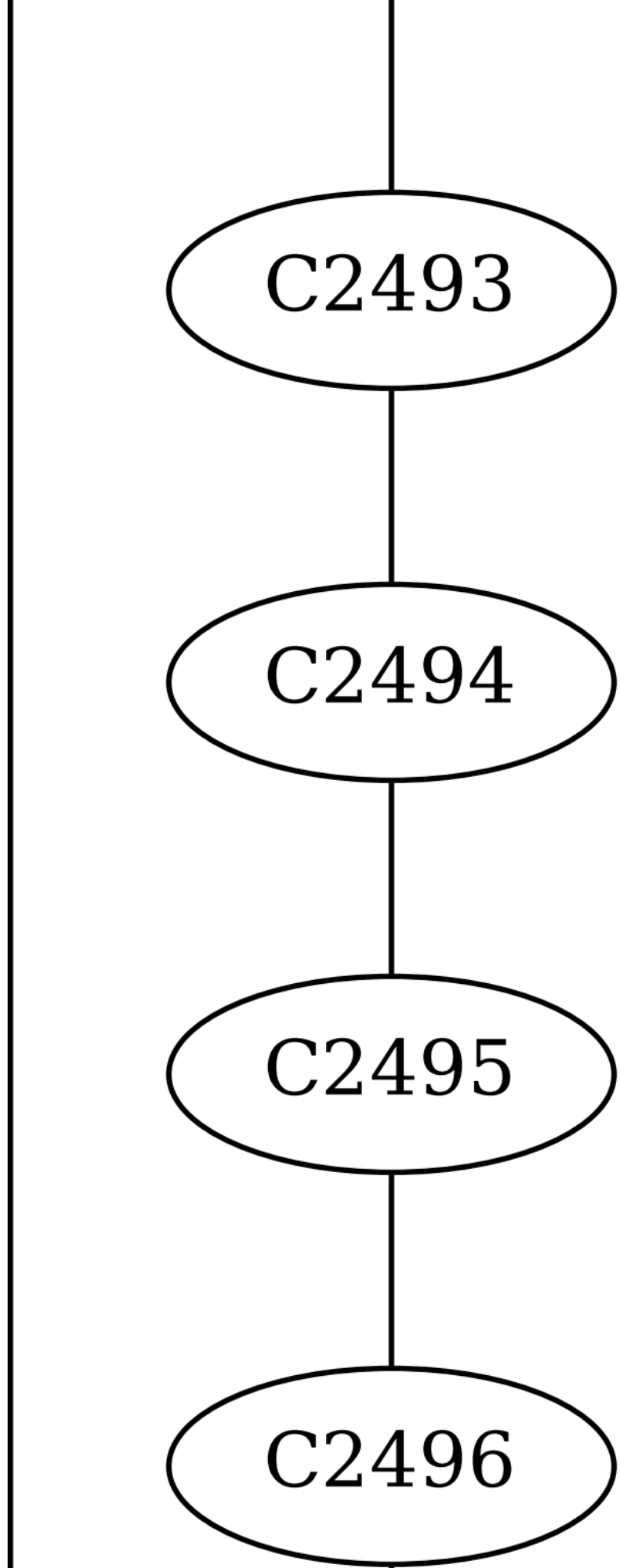
C2493
C2494
C2495
C2496

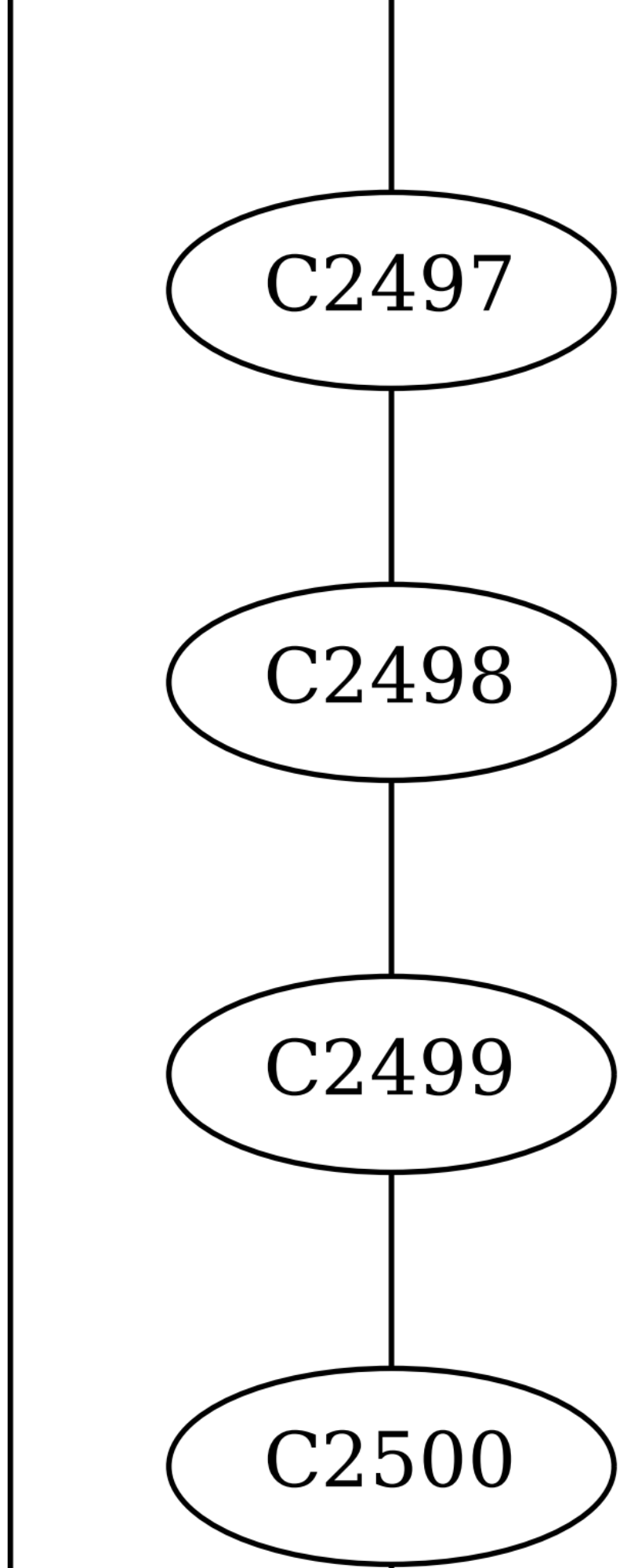
C2497
C2498
C2499
C2500

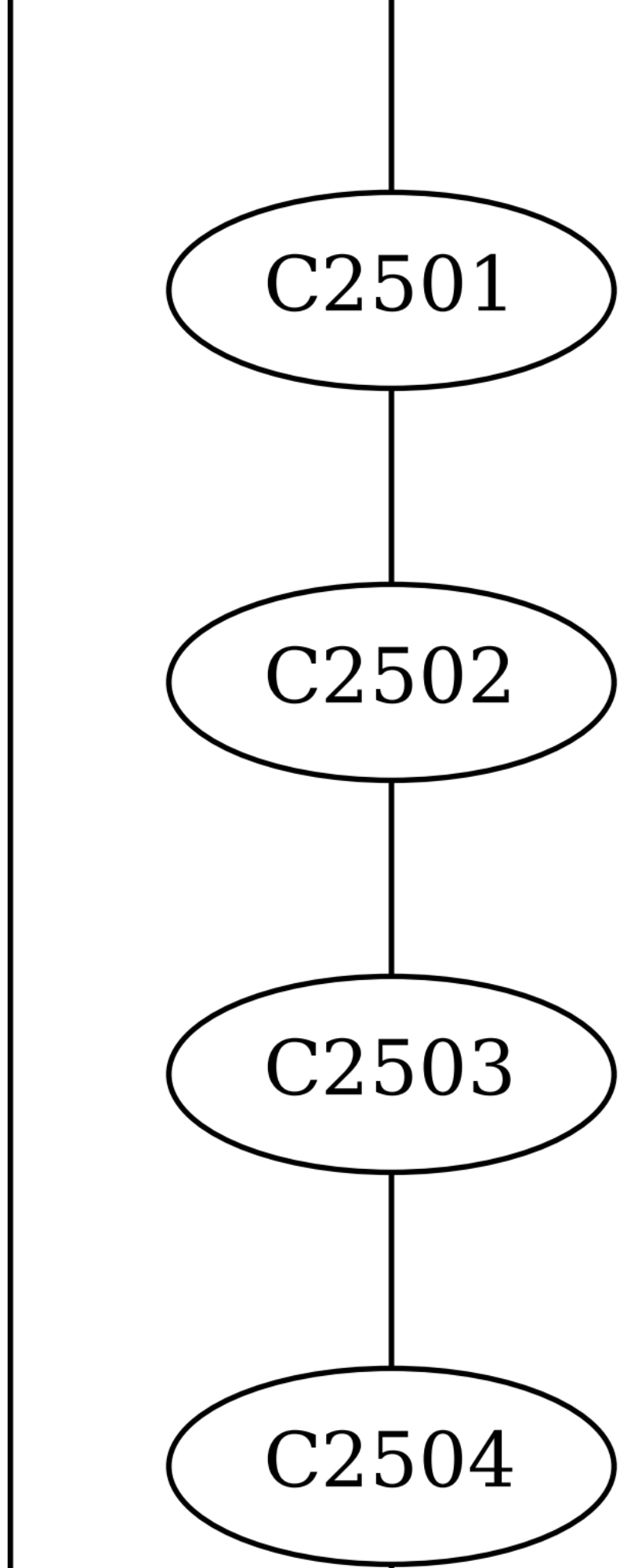
C2501
C2502
C2503
C2504

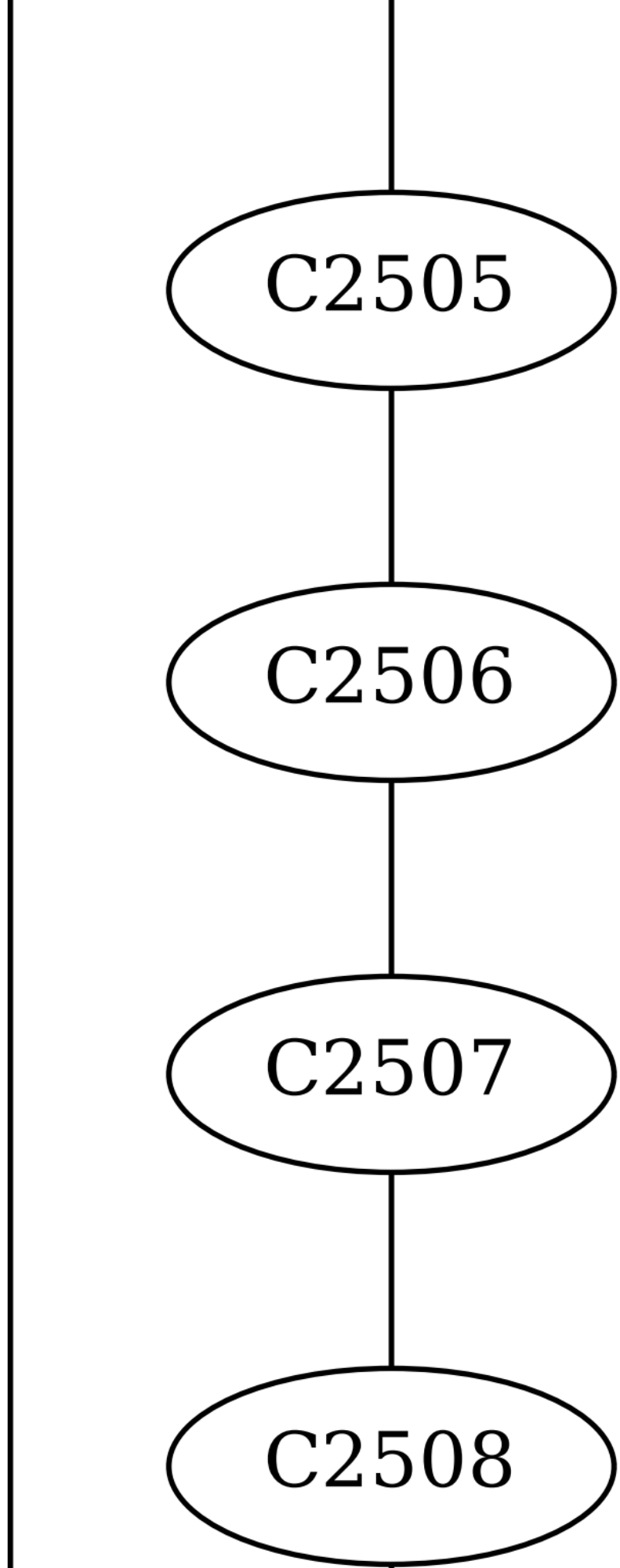
C2505
C2506
C2507
C2508

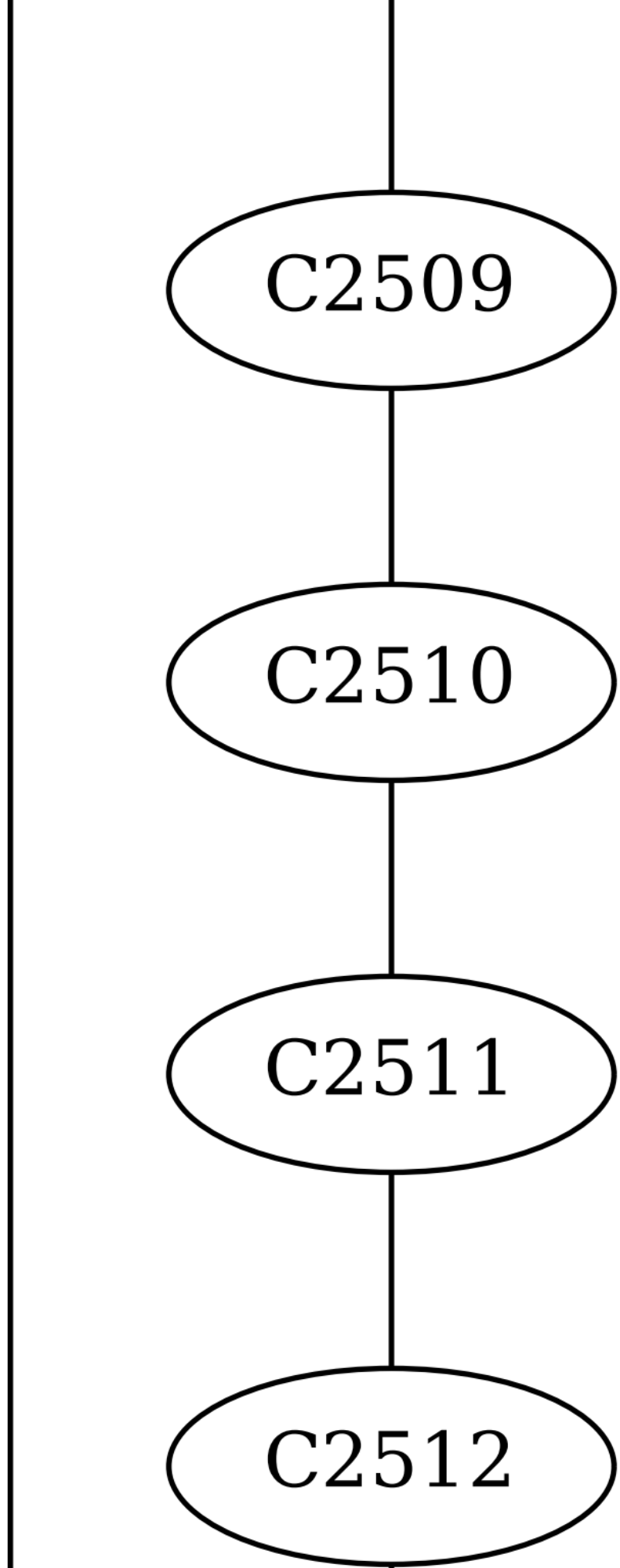
C2509
C2510
C2511
C2512

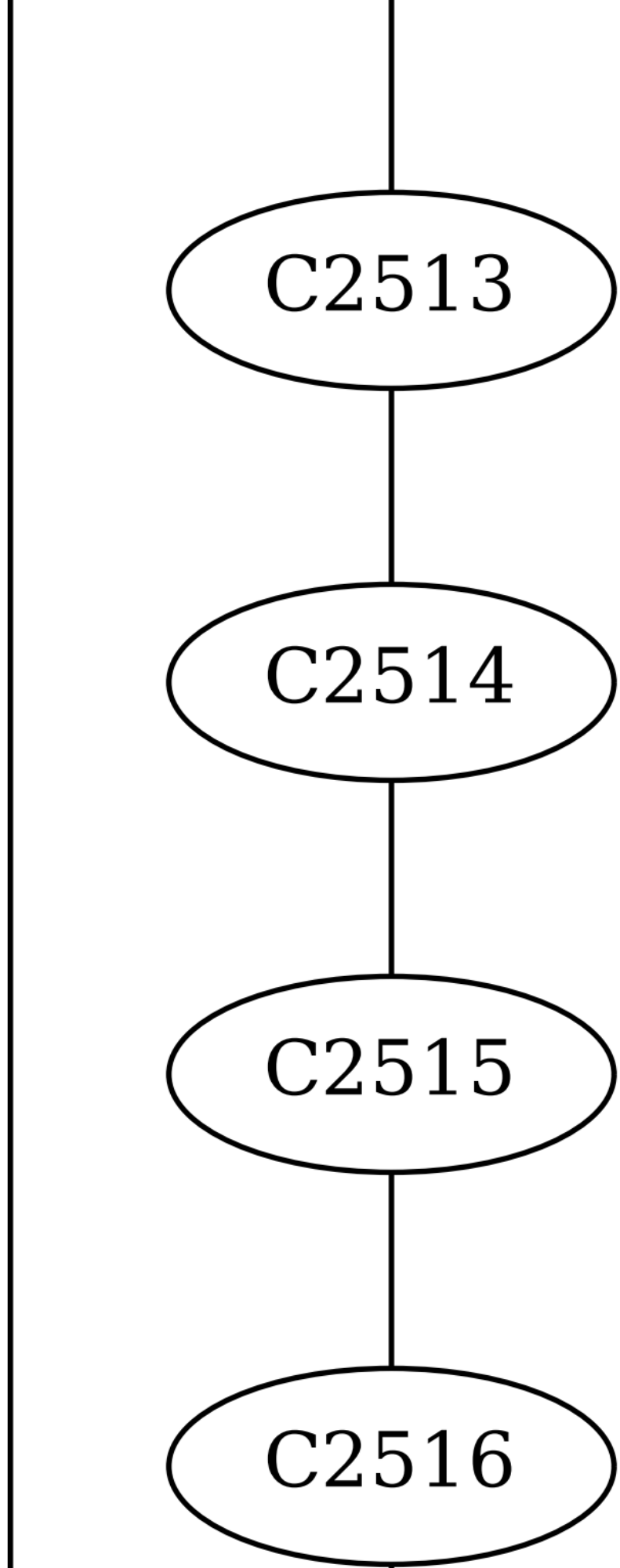
C2513
C2514
C2515
C2516

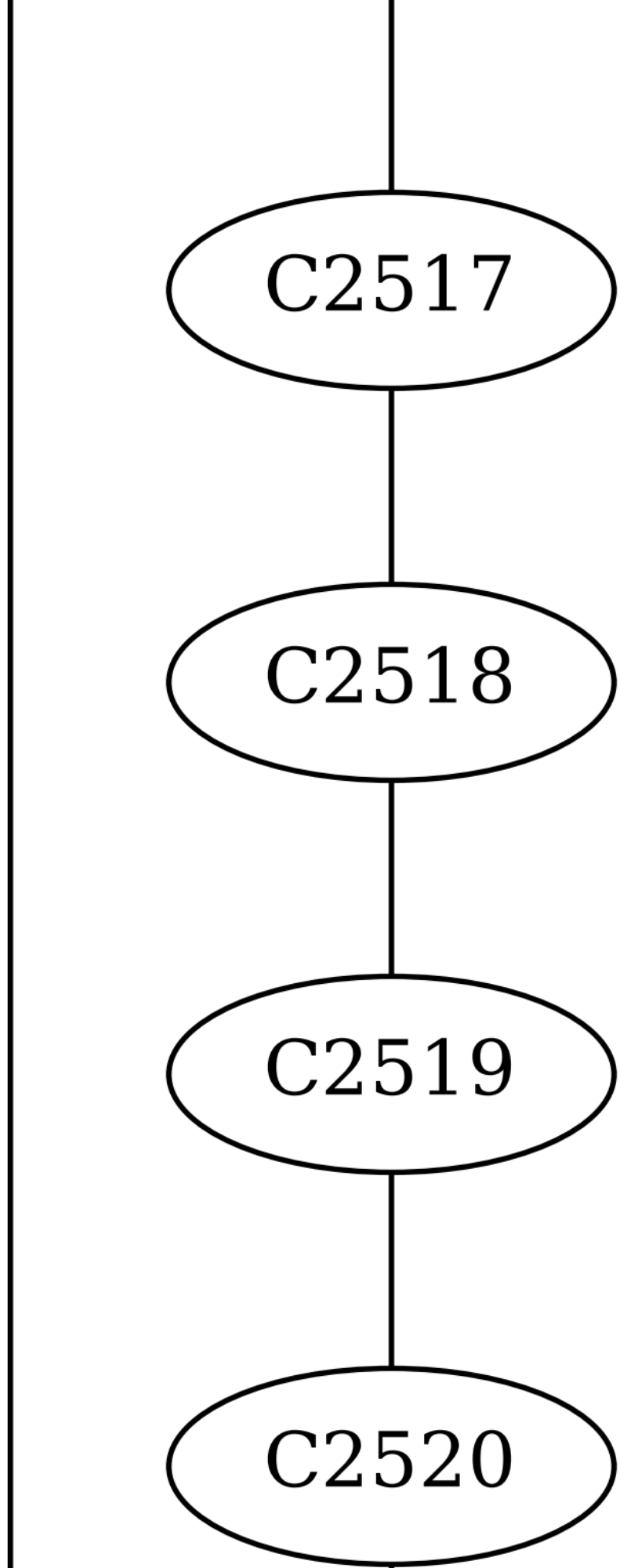
C2517
C2518
C2519
C2520

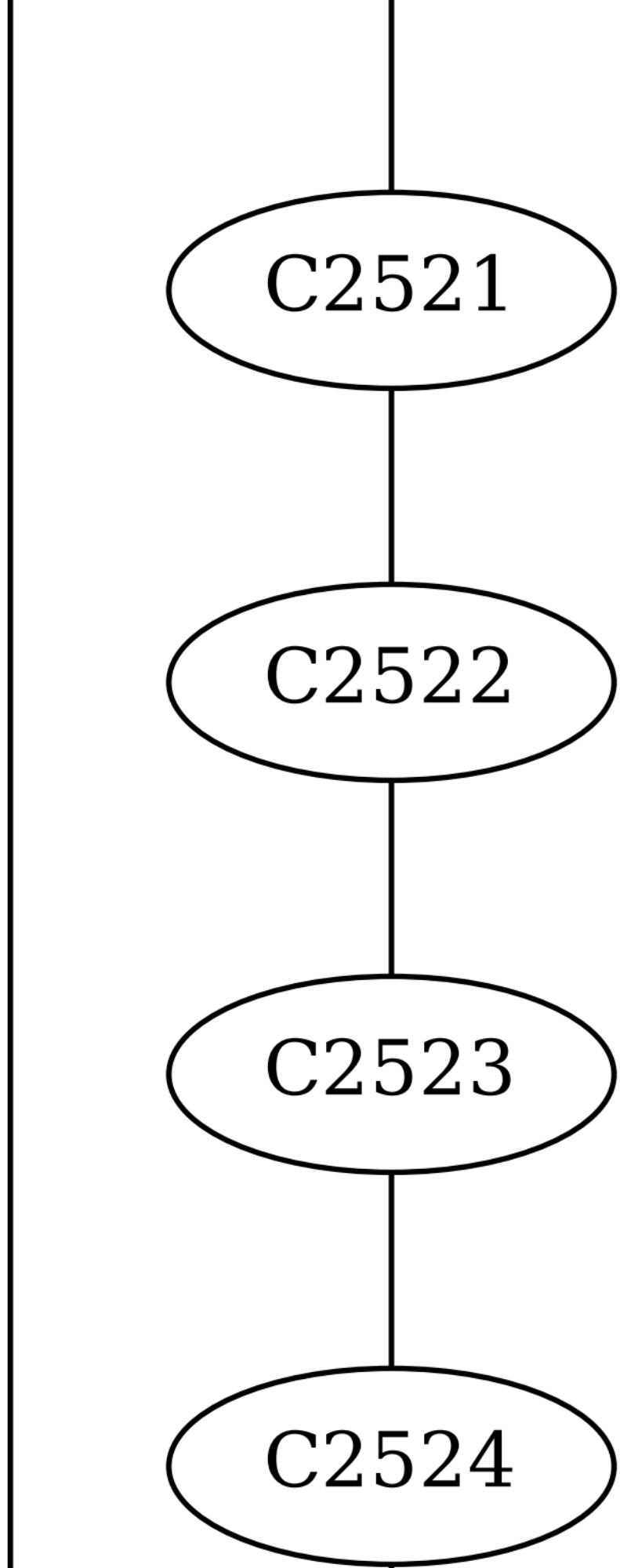
C2521
C2522
C2523
C2524

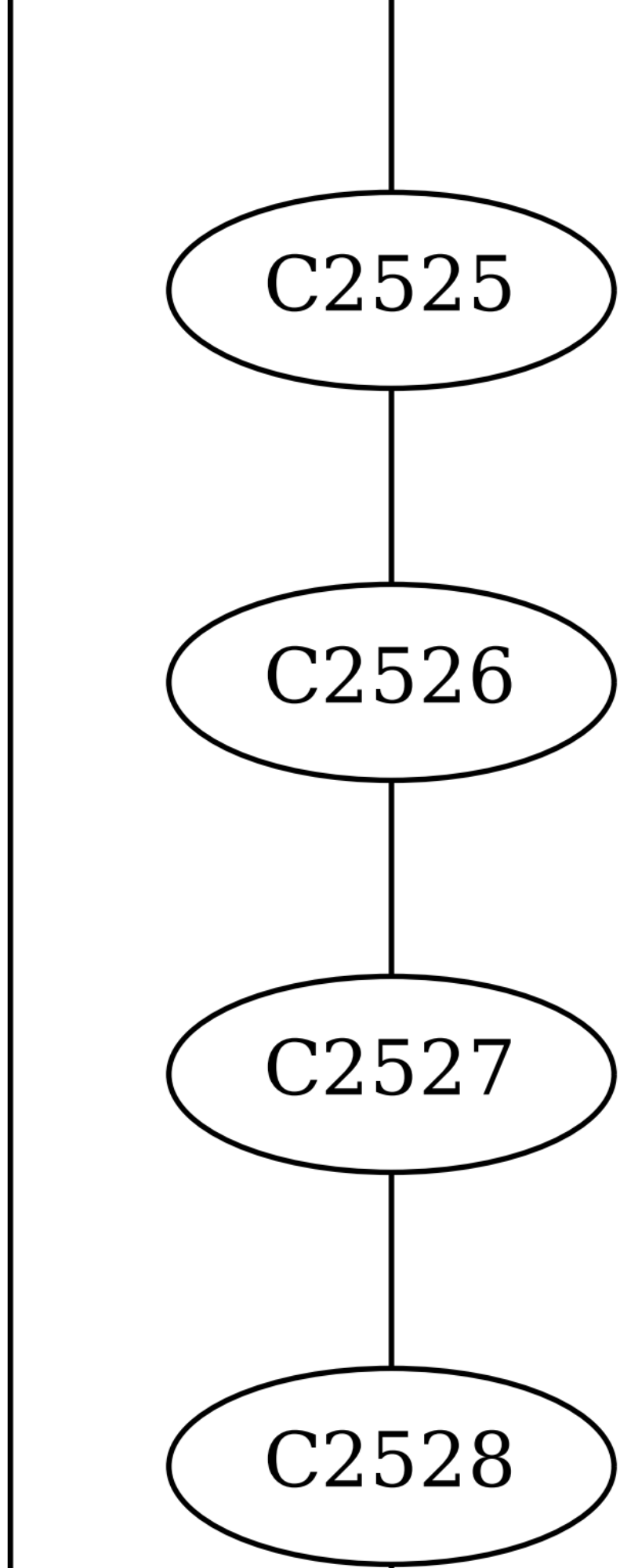
C2525
C2526
C2527
C2528

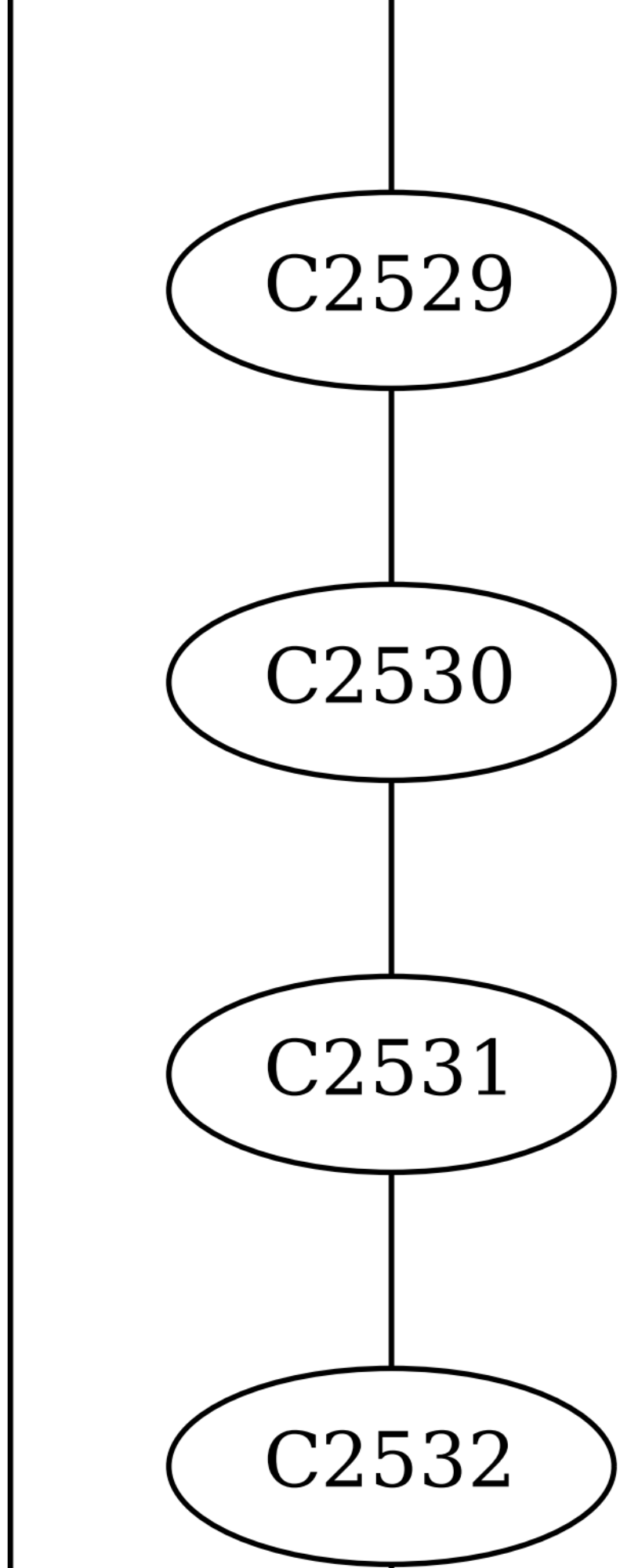
C2529
C2530
C2531
C2532

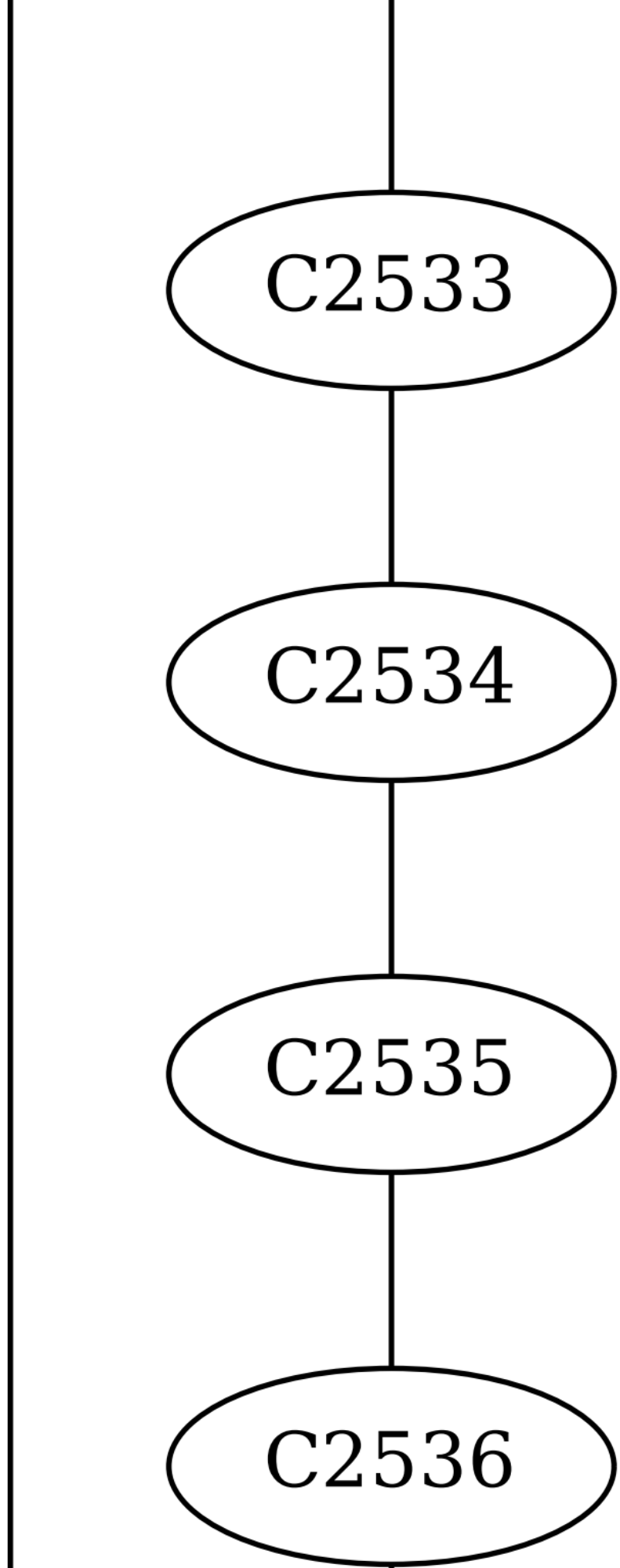
C2533
C2534
C2535
C2536

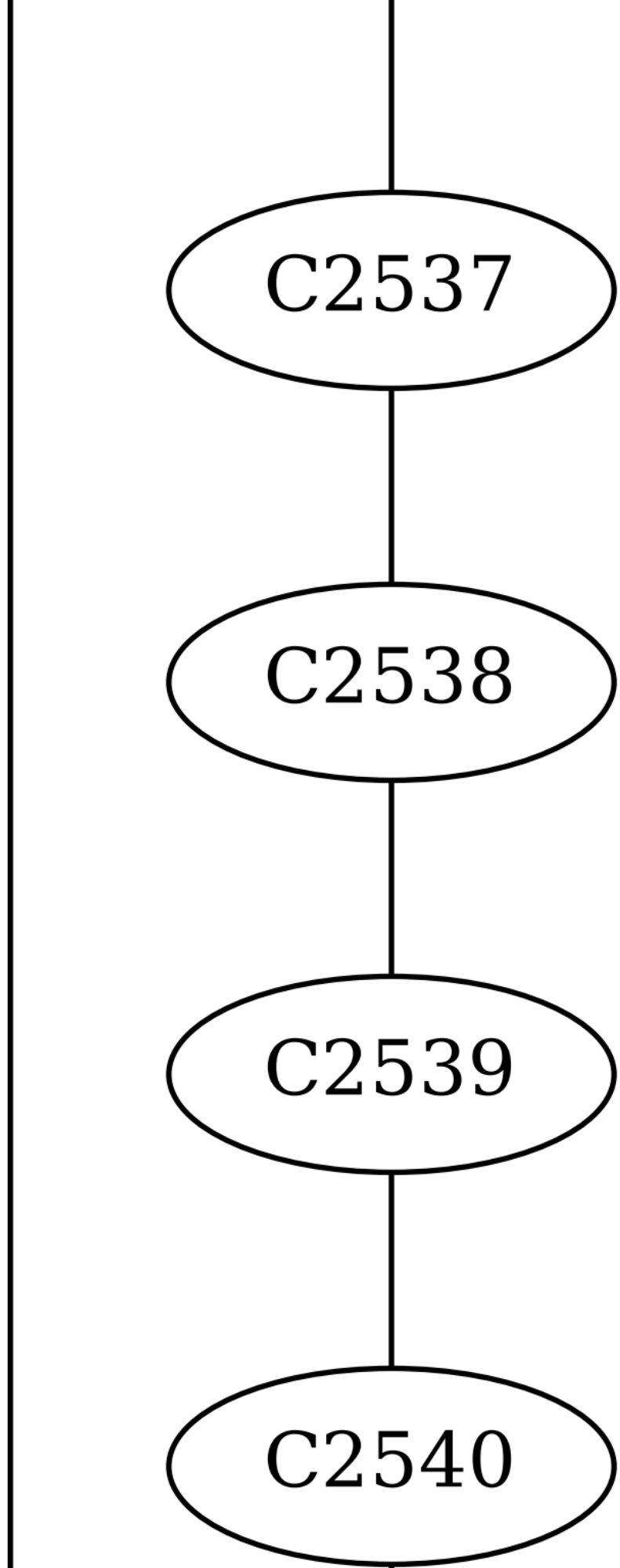
C2537
C2538
C2539
C2540

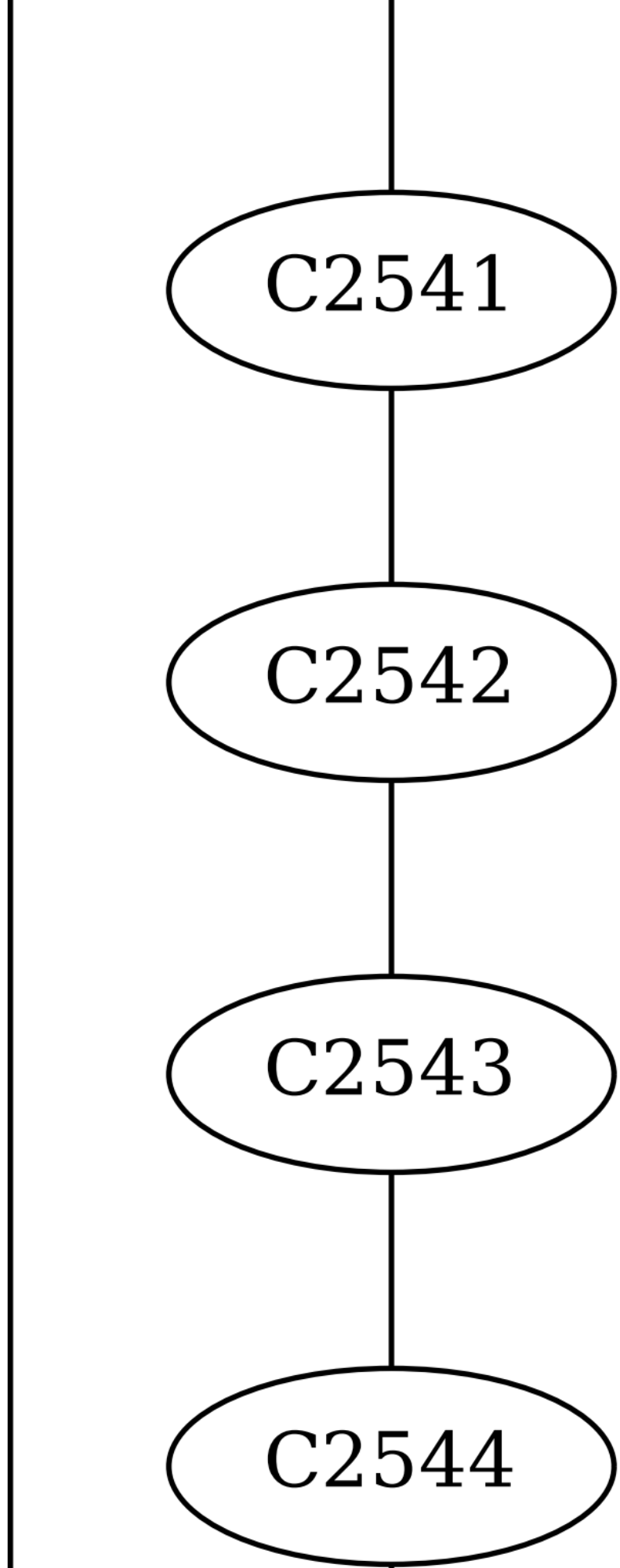
C2541
C2542
C2543
C2544

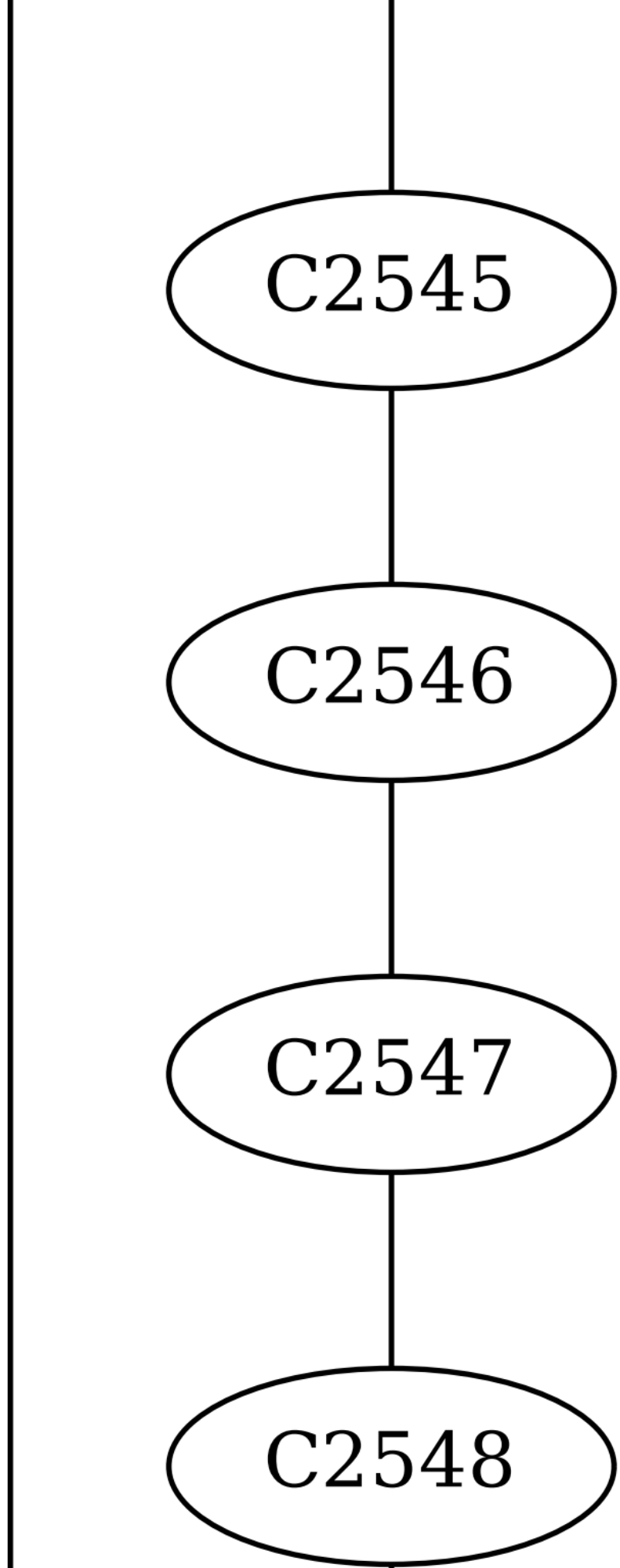
C2545
C2546
C2547
C2548

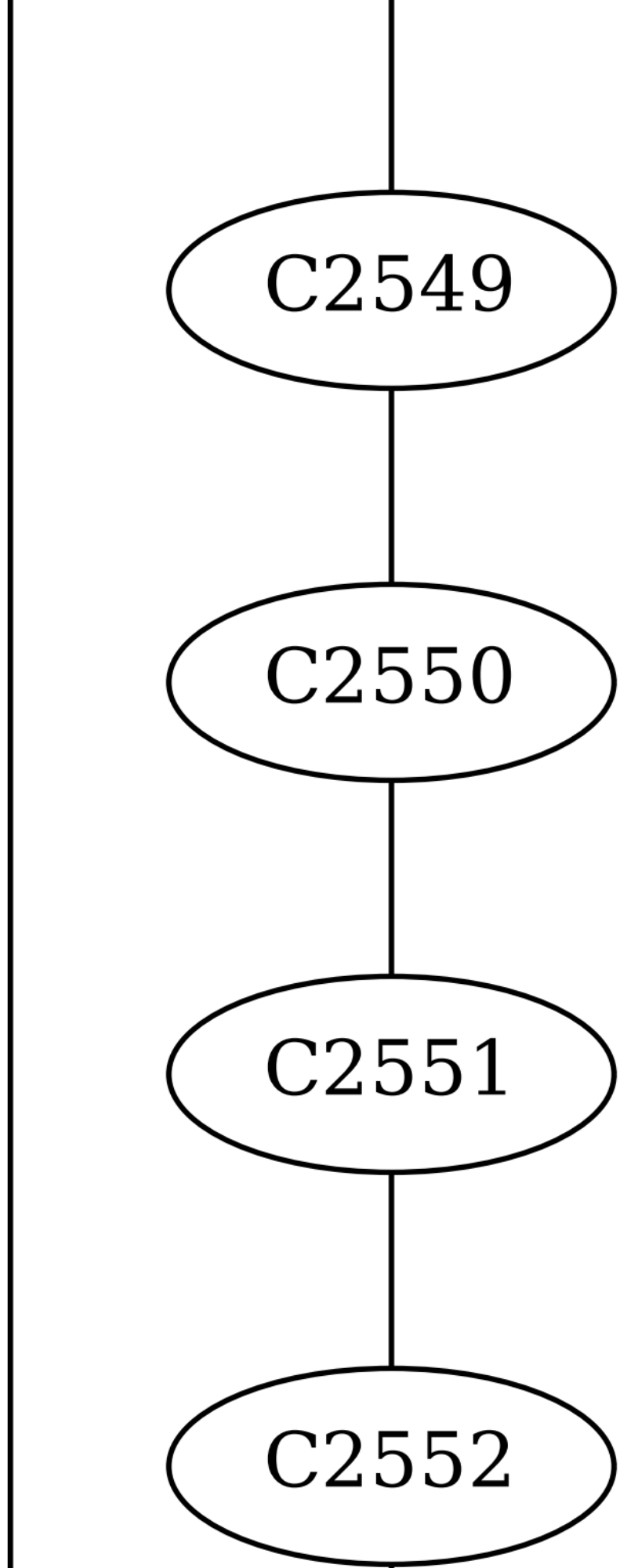
C2549
C2550
C2551
C2552

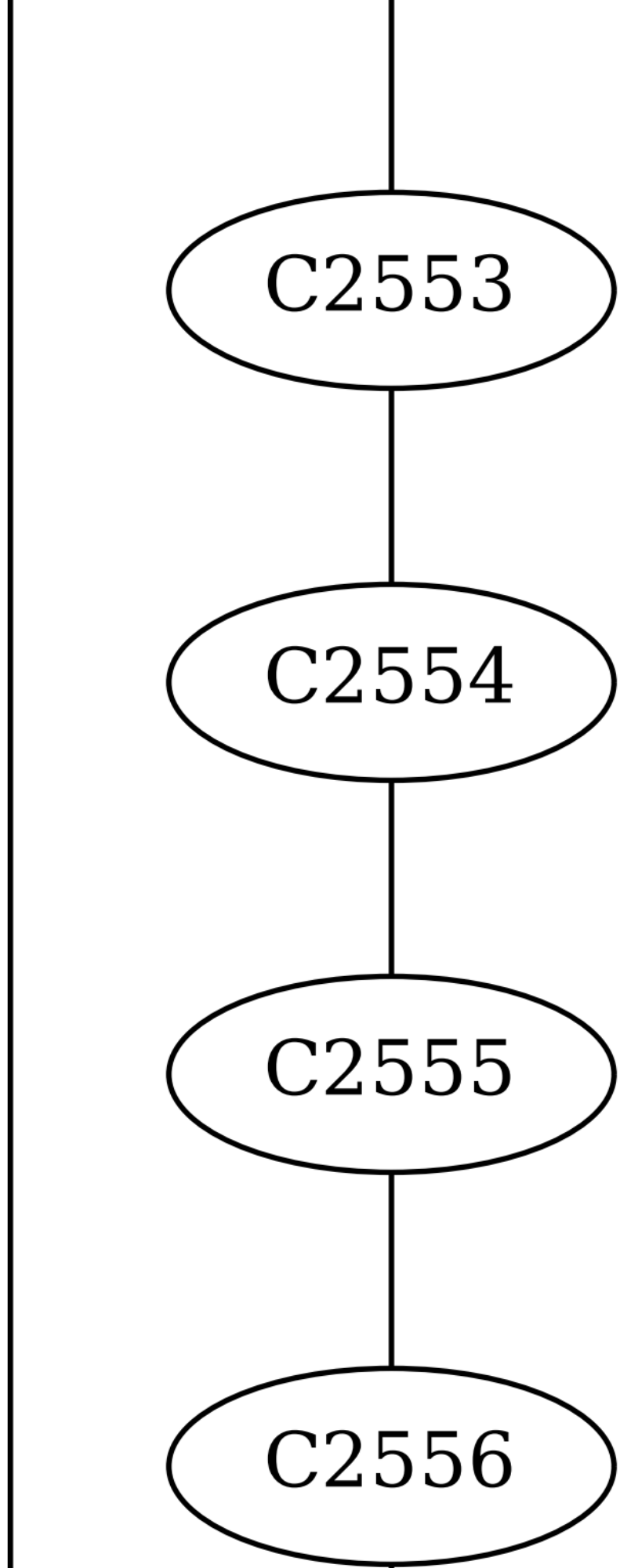
C2553
C2554
C2555
C2556

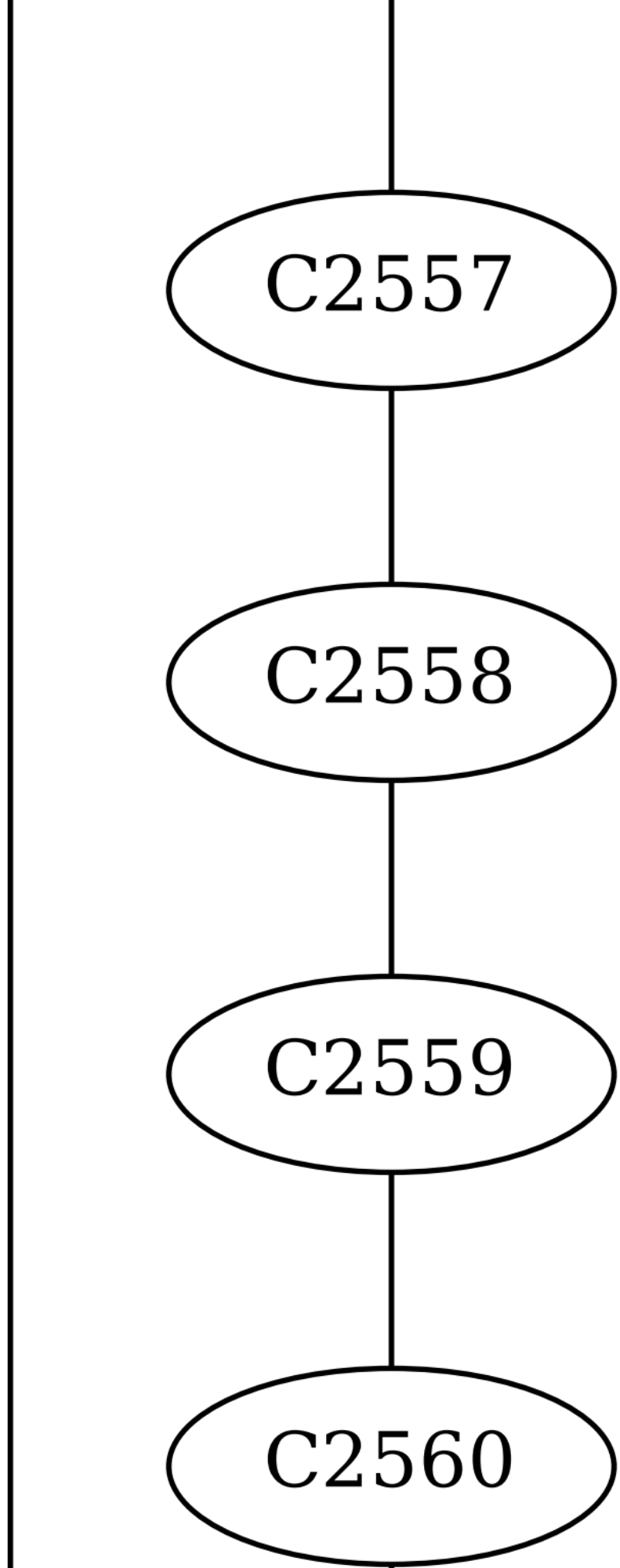
C2557
C2558
C2559
C2560

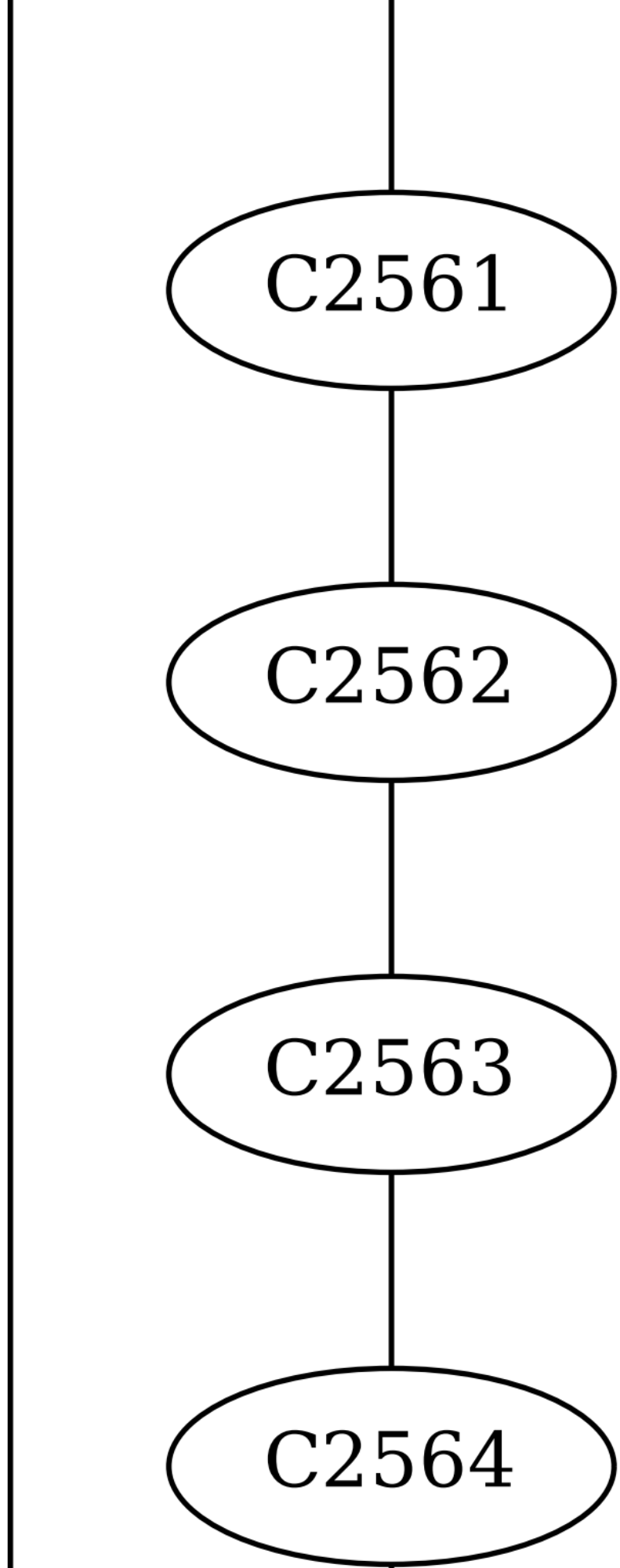
C2561
C2562
C2563
C2564

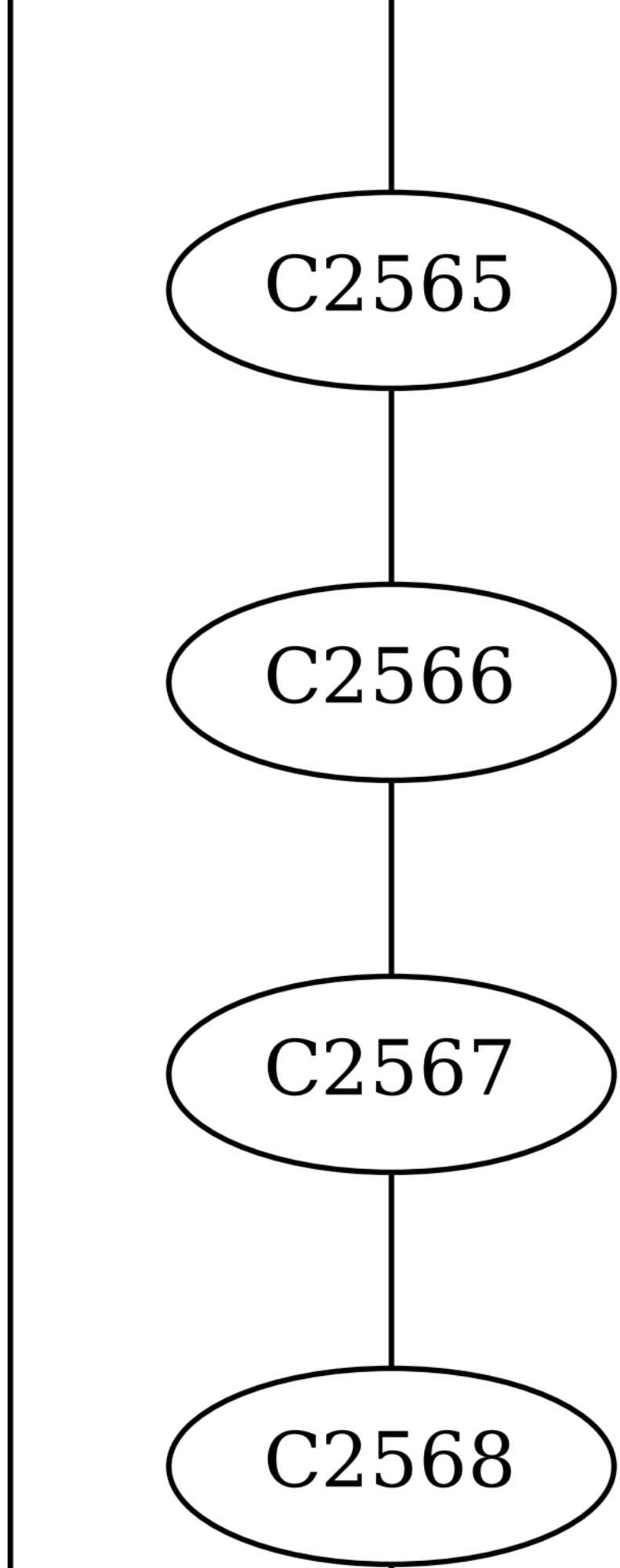
C2565
C2566
C2567
C2568

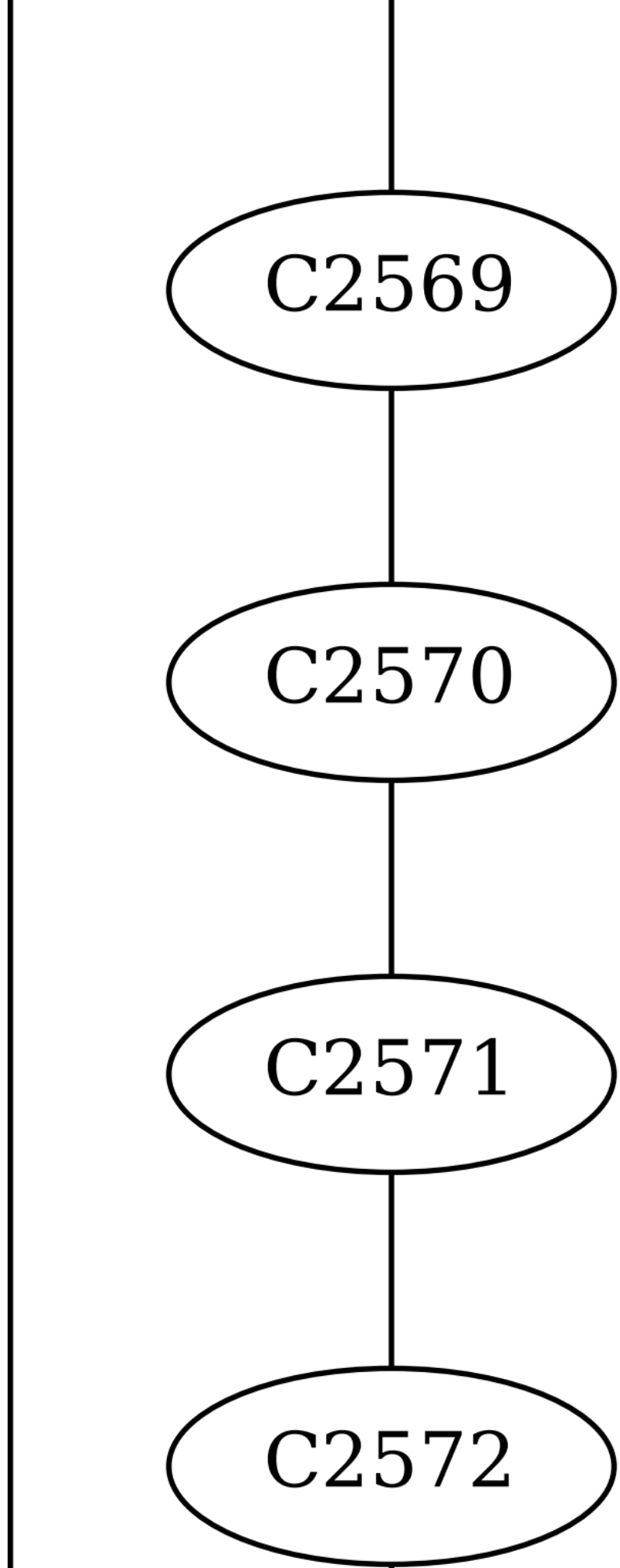
C2569
C2570
C2571
C2572

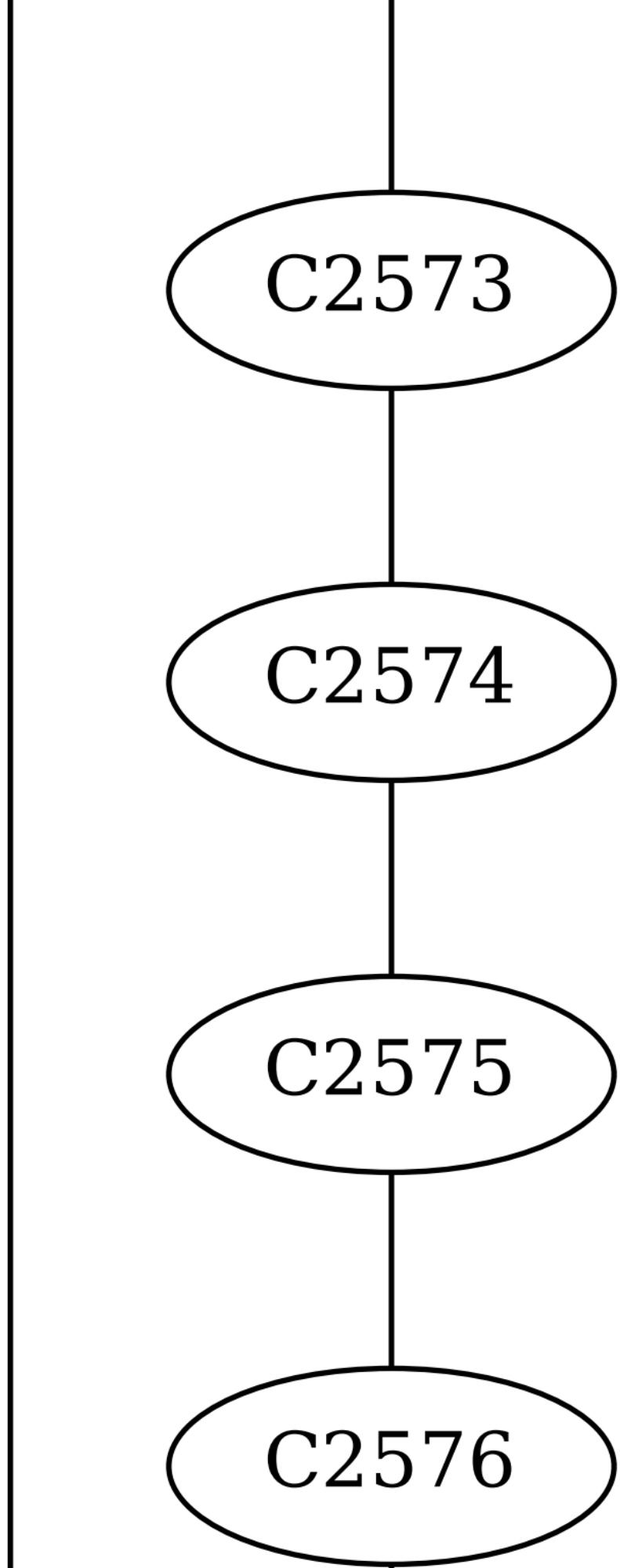
C2573
C2574
C2575
C2576

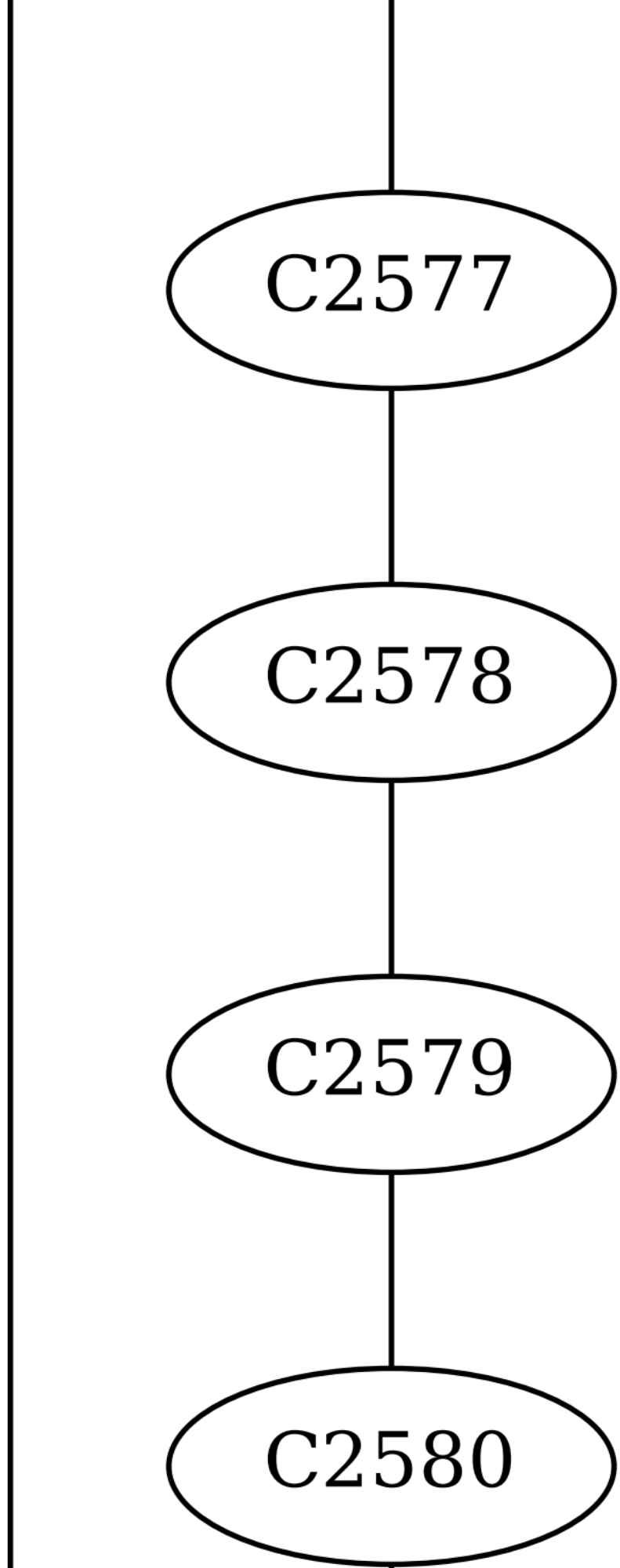
C2577
C2578
C2579
C2580

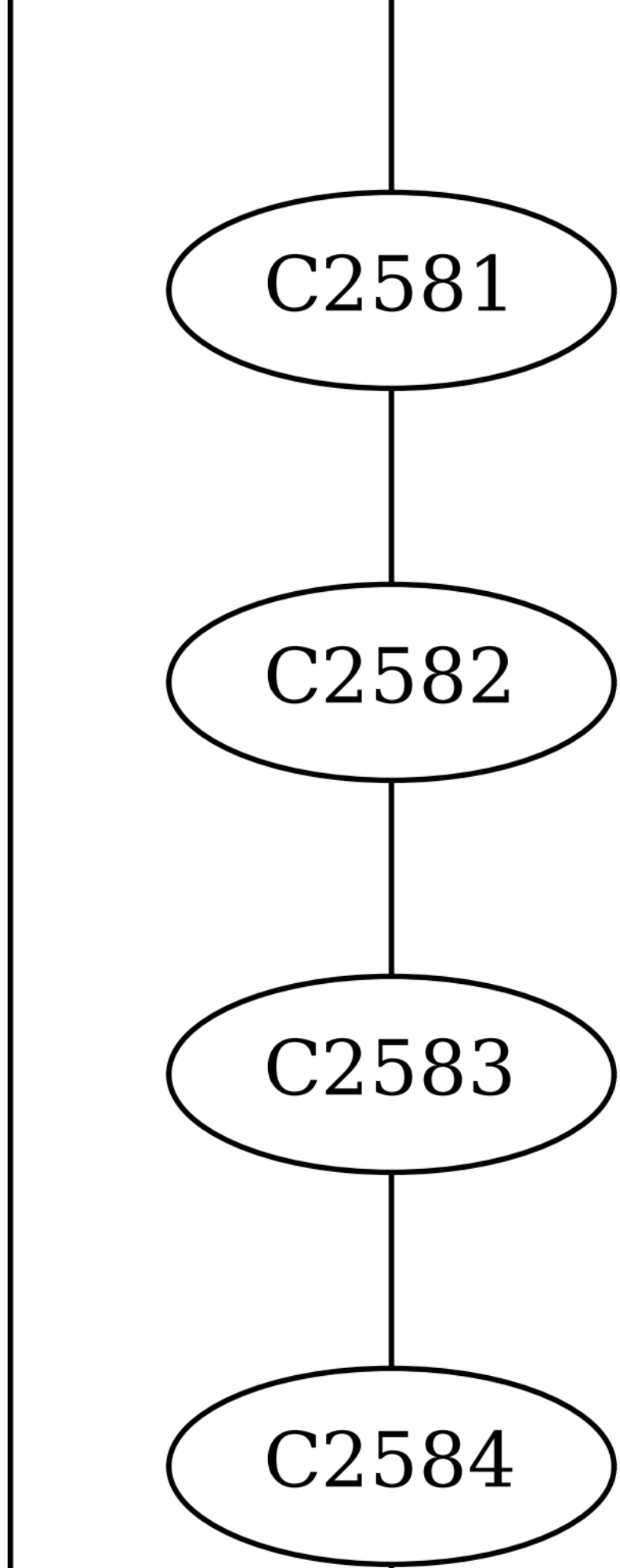
C2581
C2582
C2583
C2584

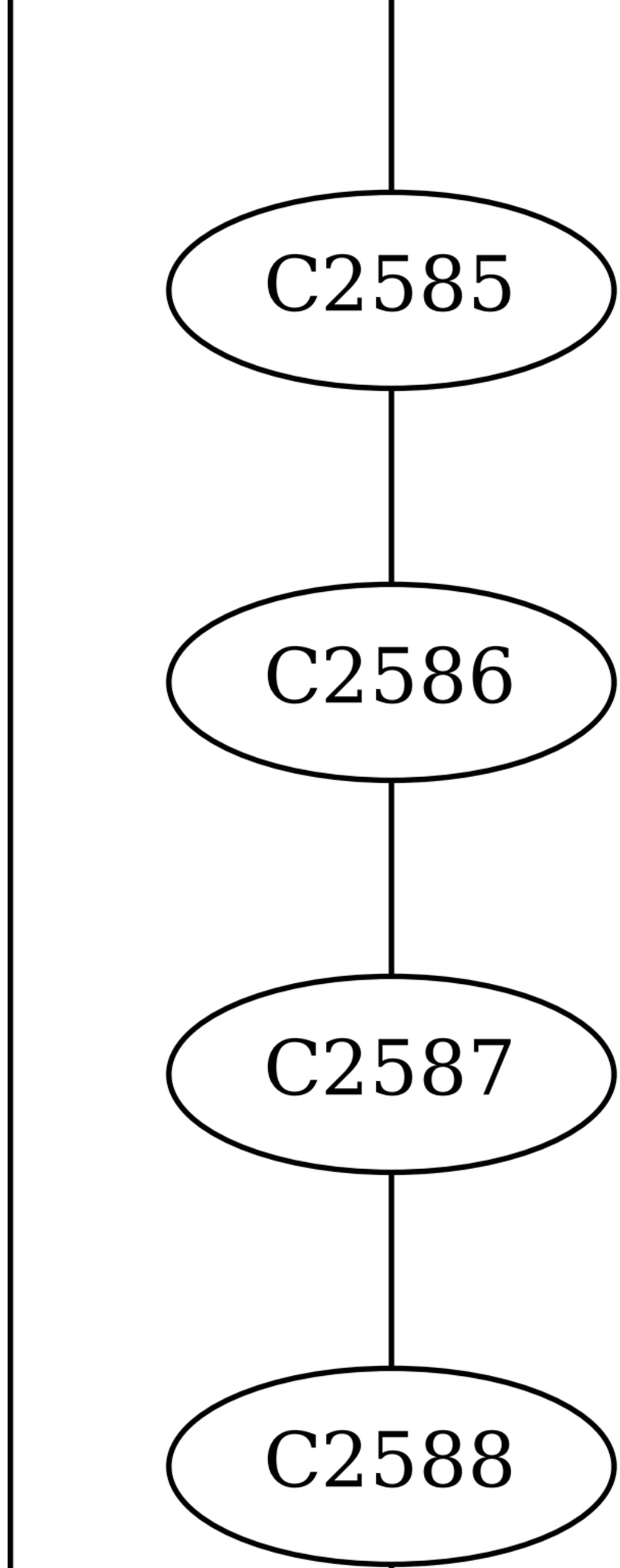
C2585
C2586
C2587
C2588

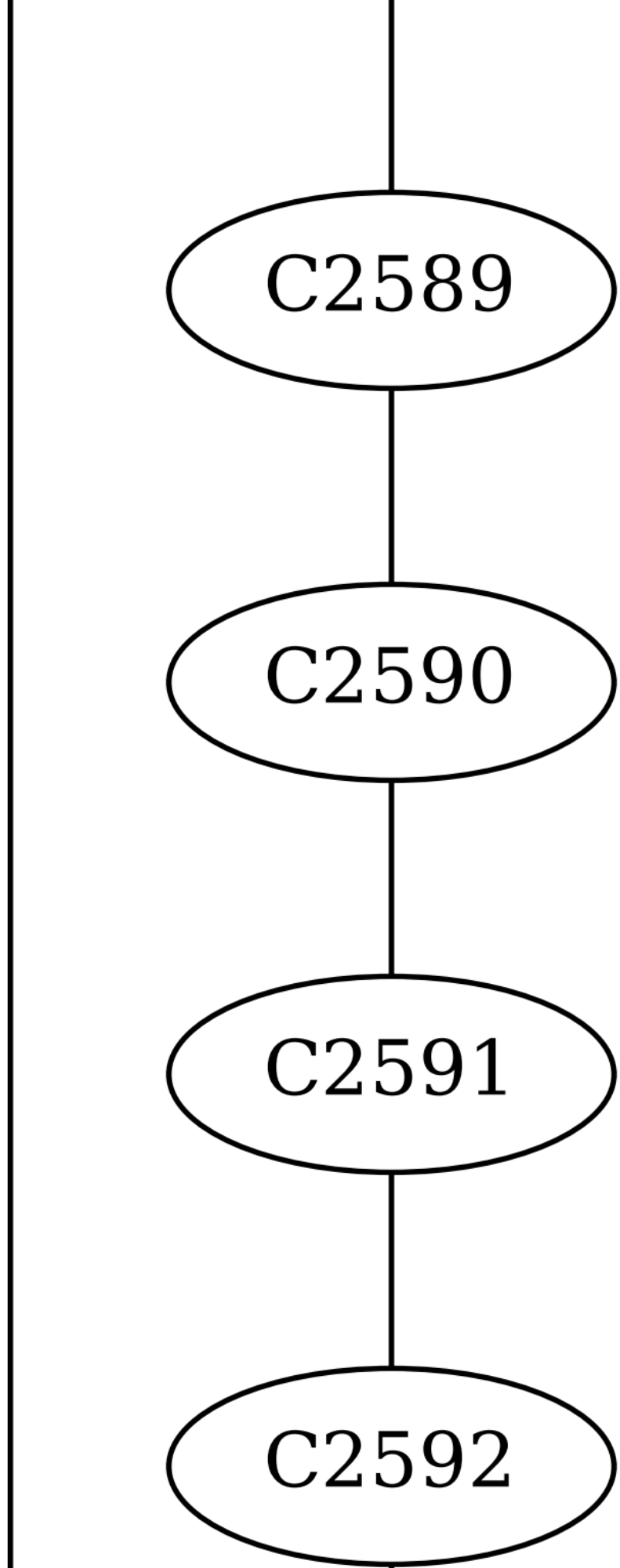
C2589
C2590
C2591
C2592

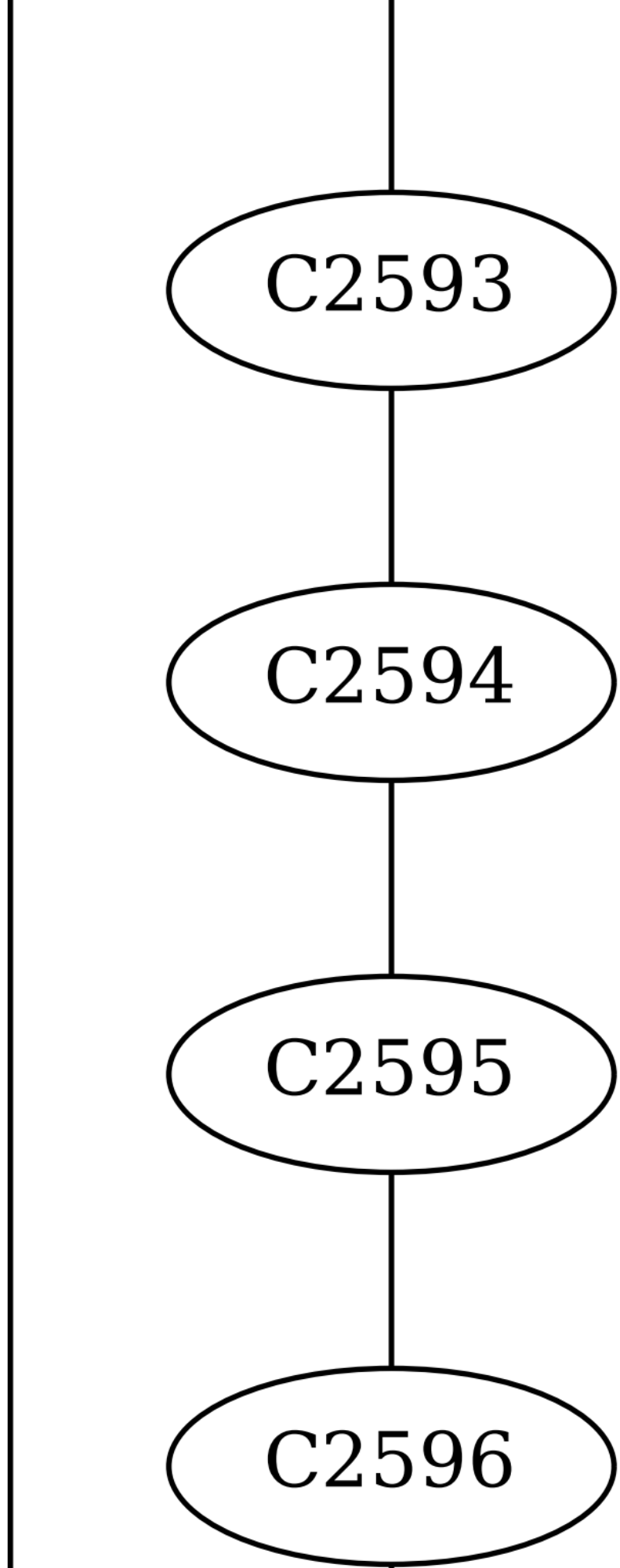
C2593
C2594
C2595
C2596

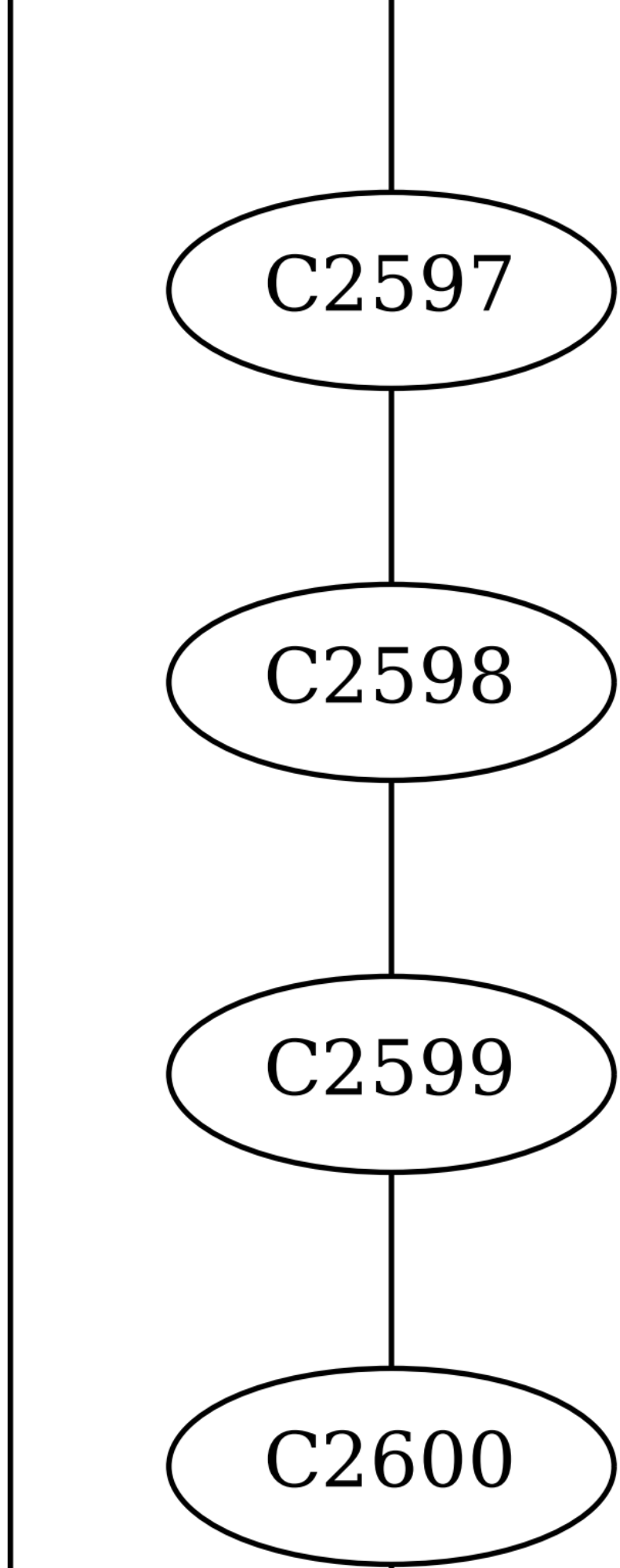
C2597
C2598
C2599
C2600

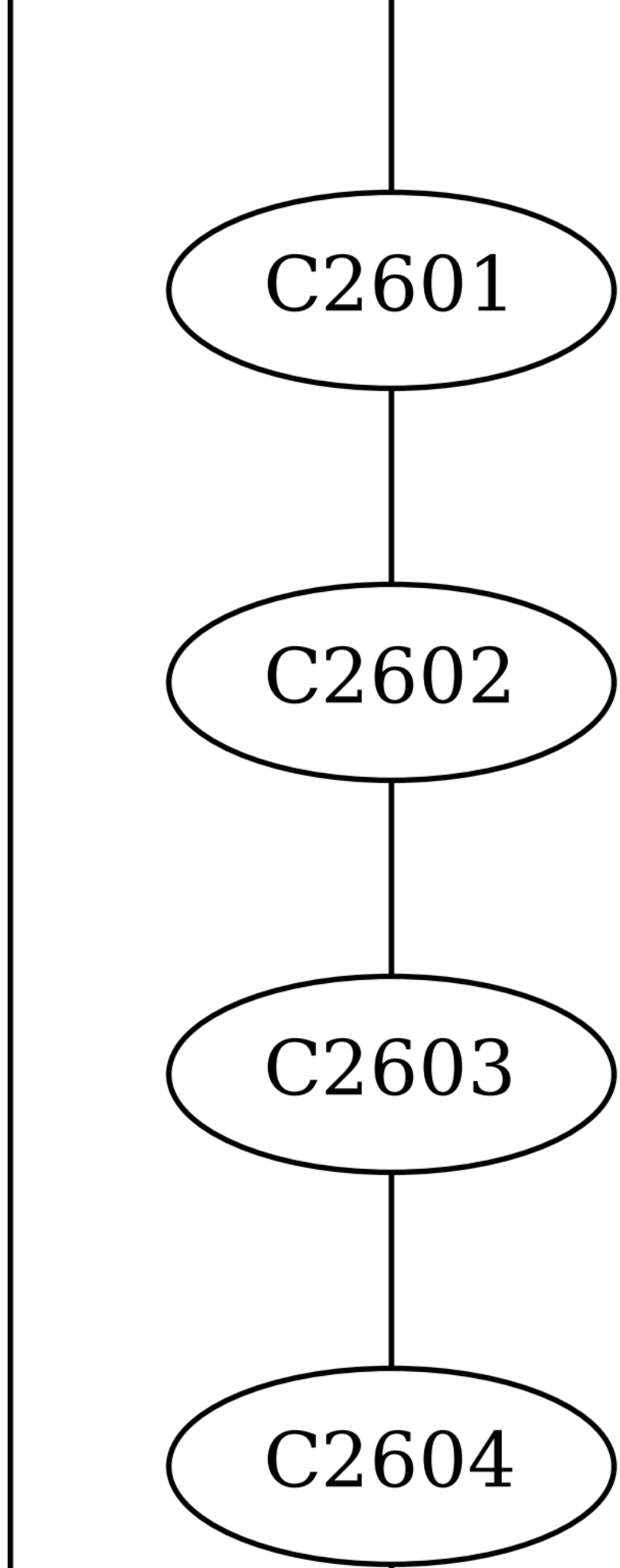
C2601
C2602
C2603
C2604

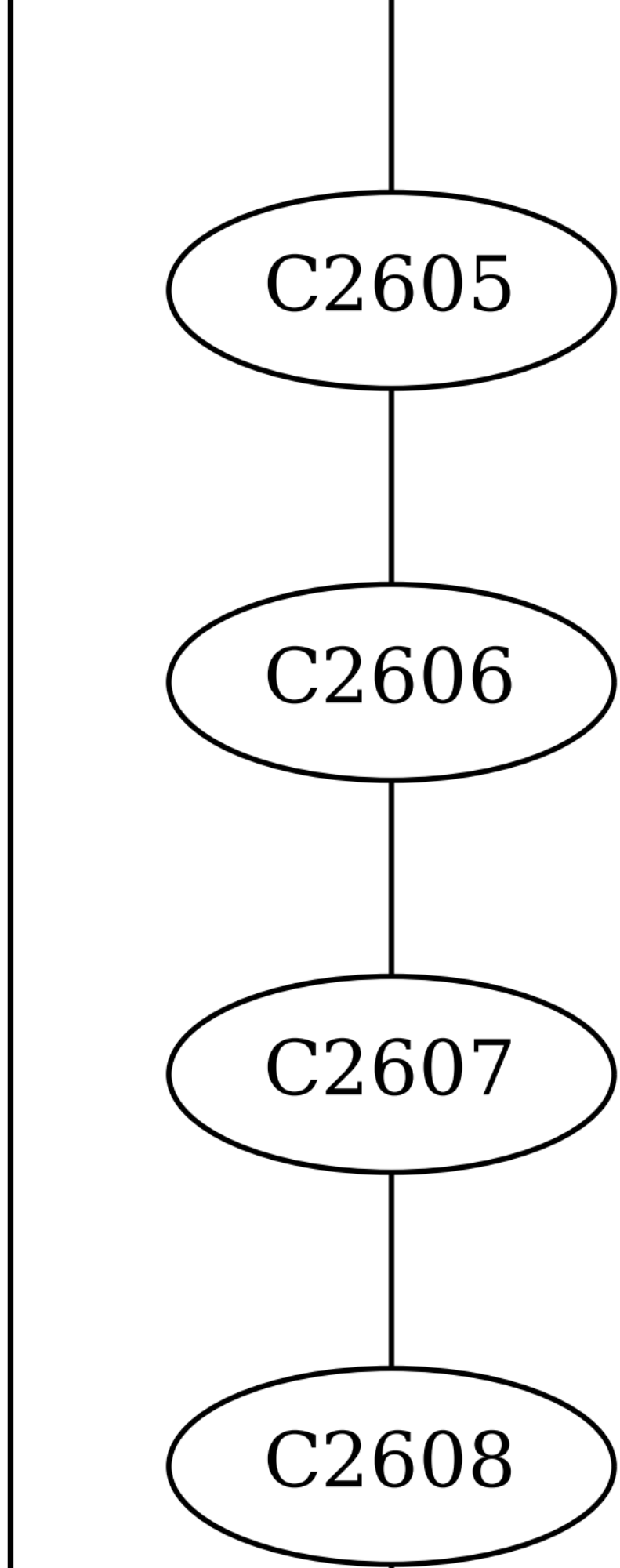
C2605
C2606
C2607
C2608

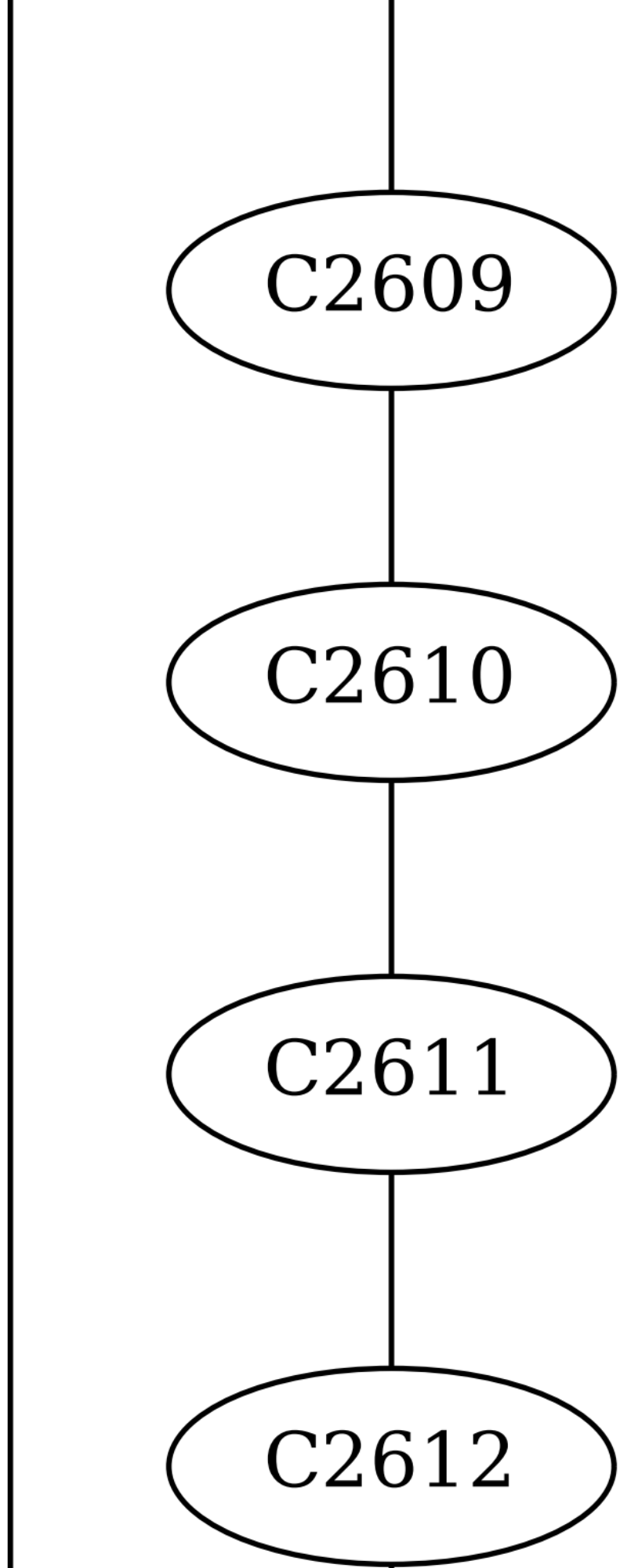
C2609
C2610
C2611
C2612

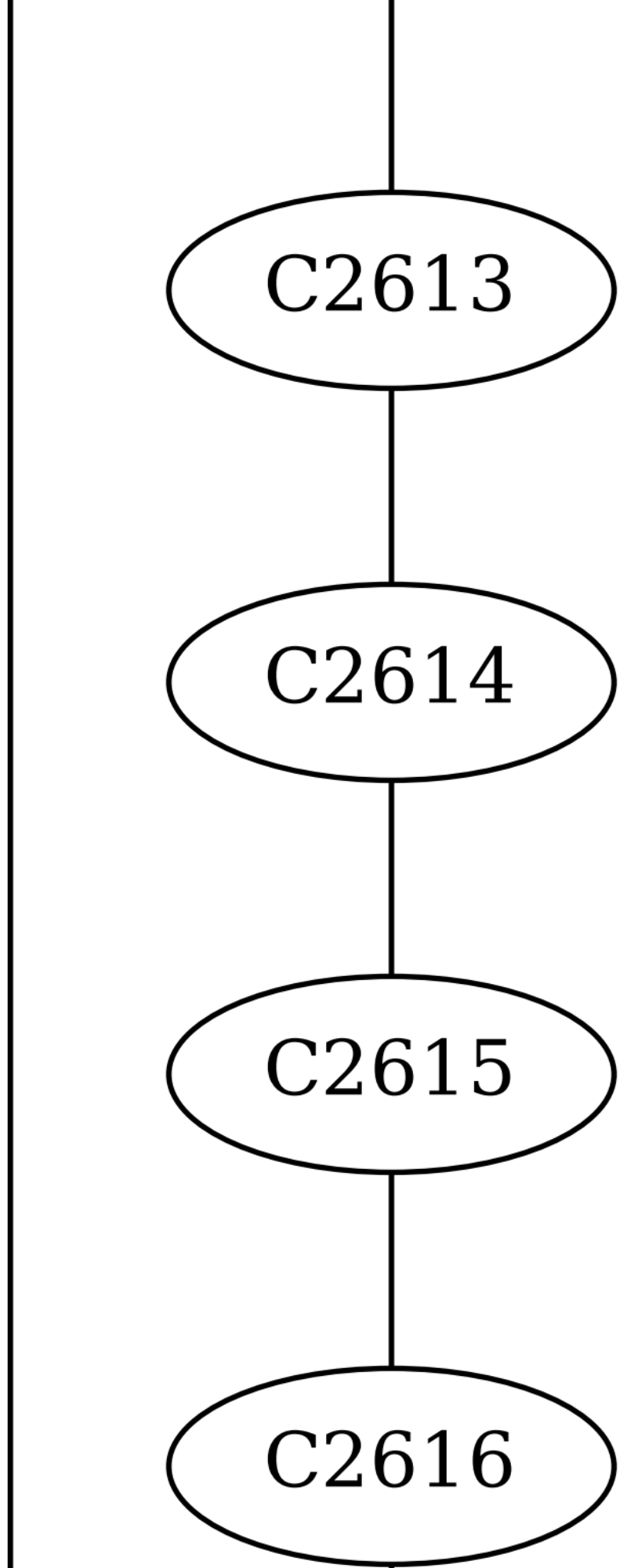
C2613
C2614
C2615
C2616

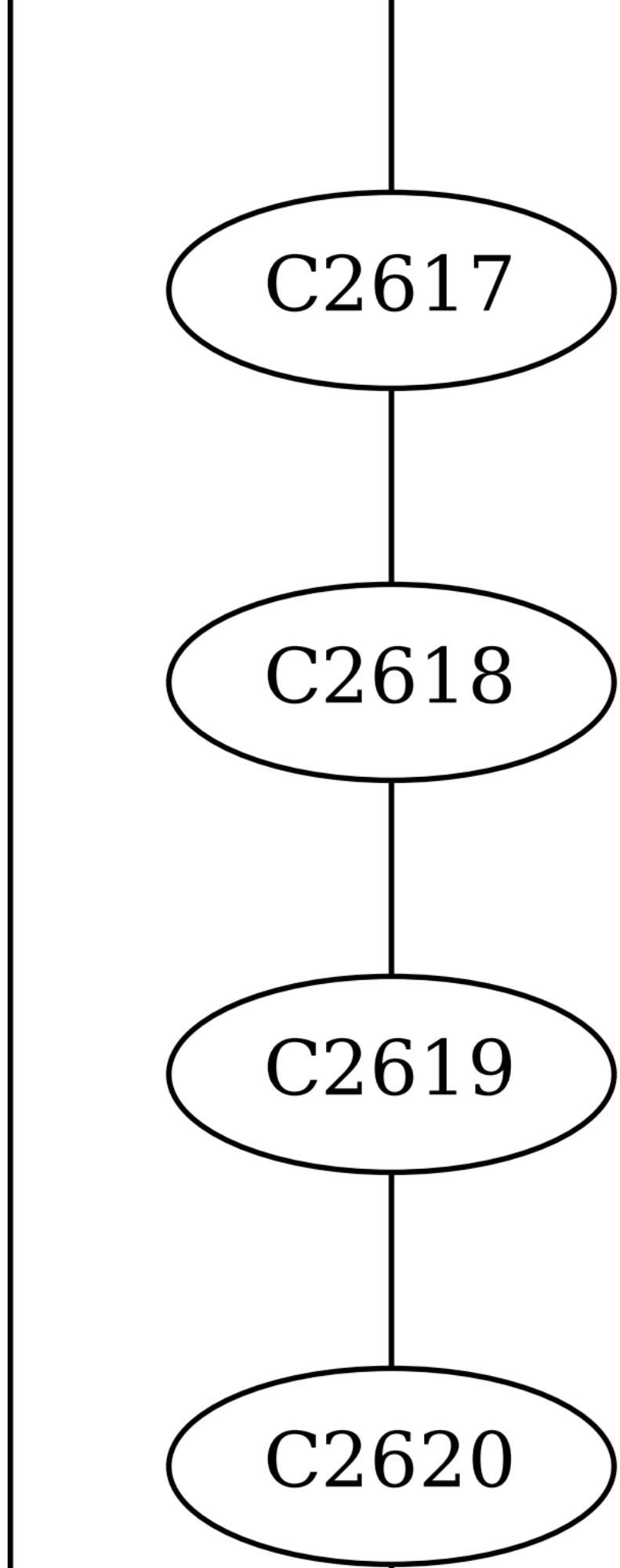
C2617
C2618
C2619
C2620

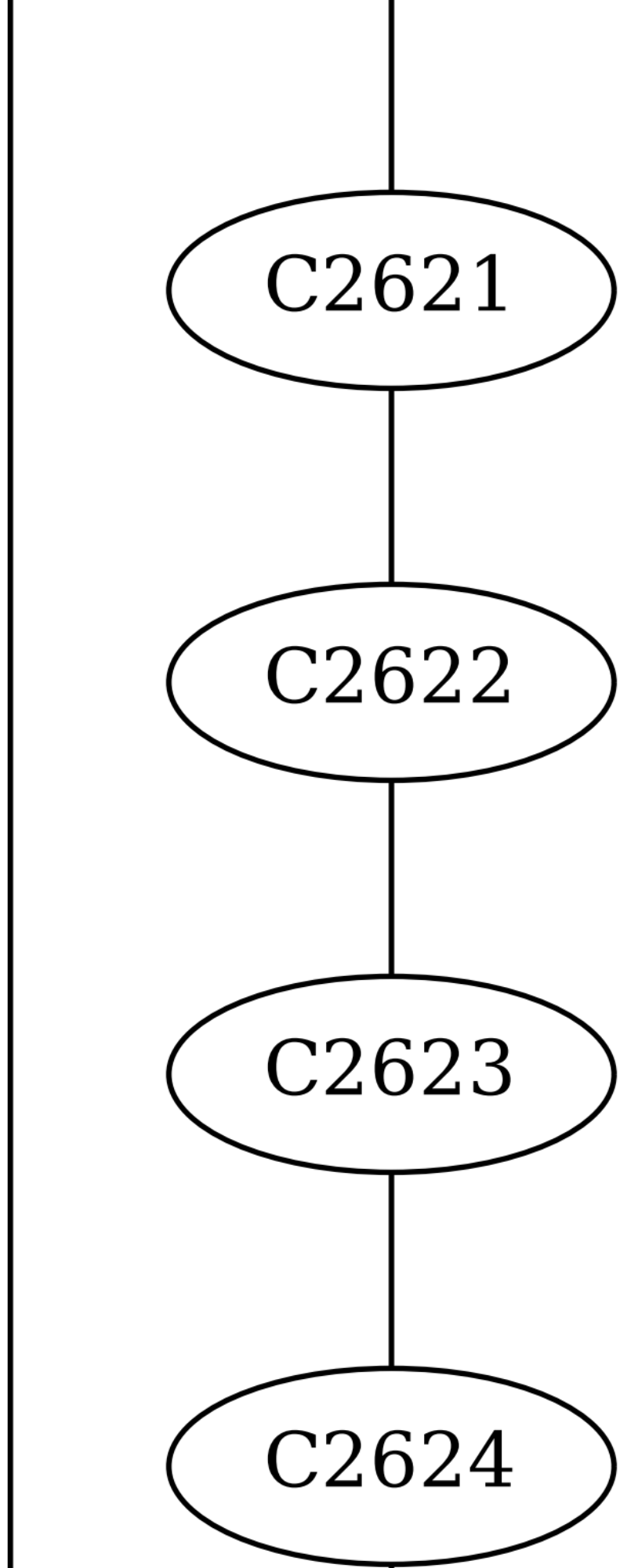
C2621
C2622
C2623
C2624

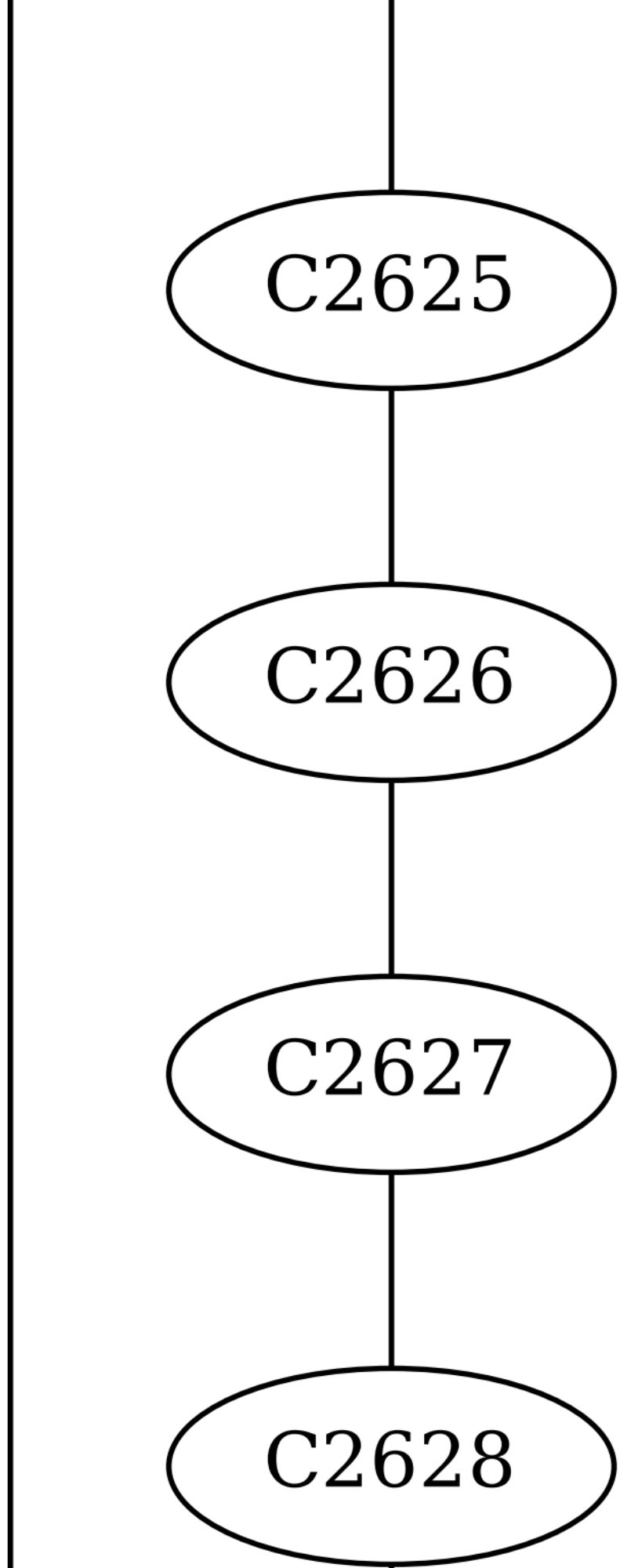
C2625
C2626
C2627
C2628

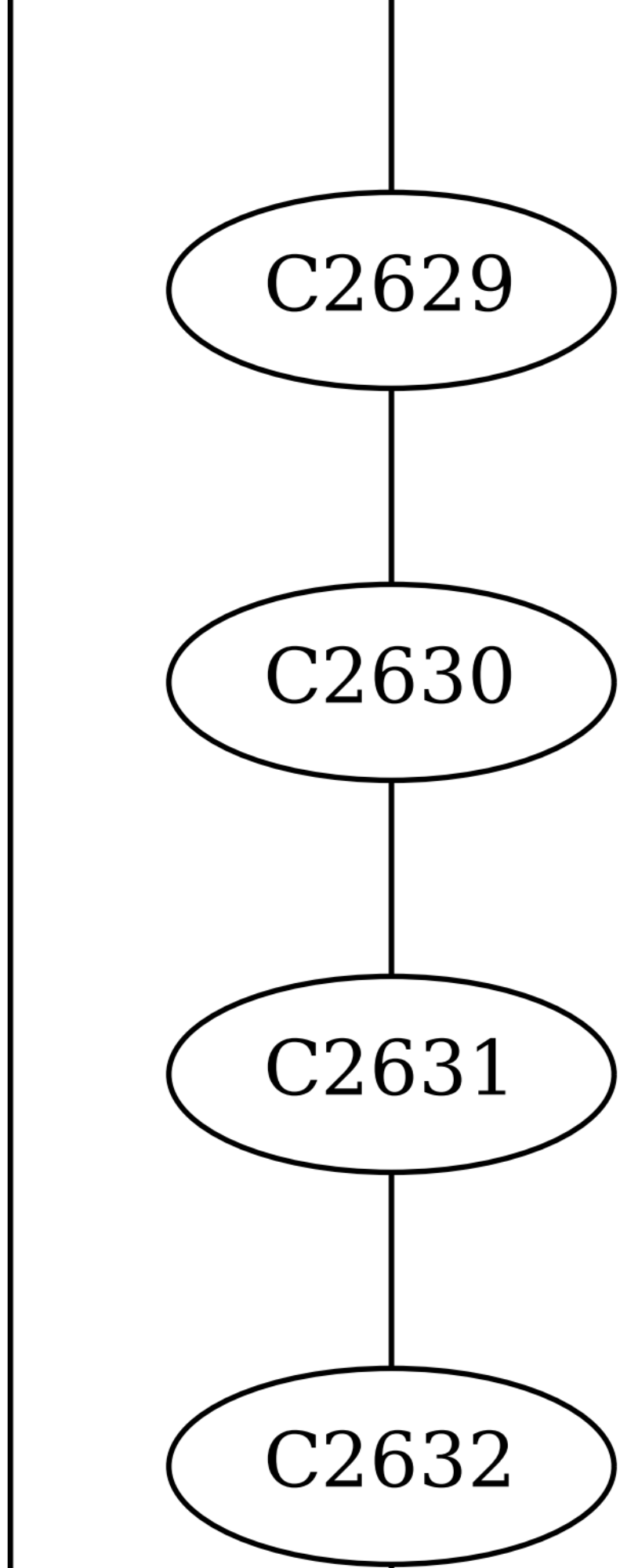
C2629
C2630
C2631
C2632

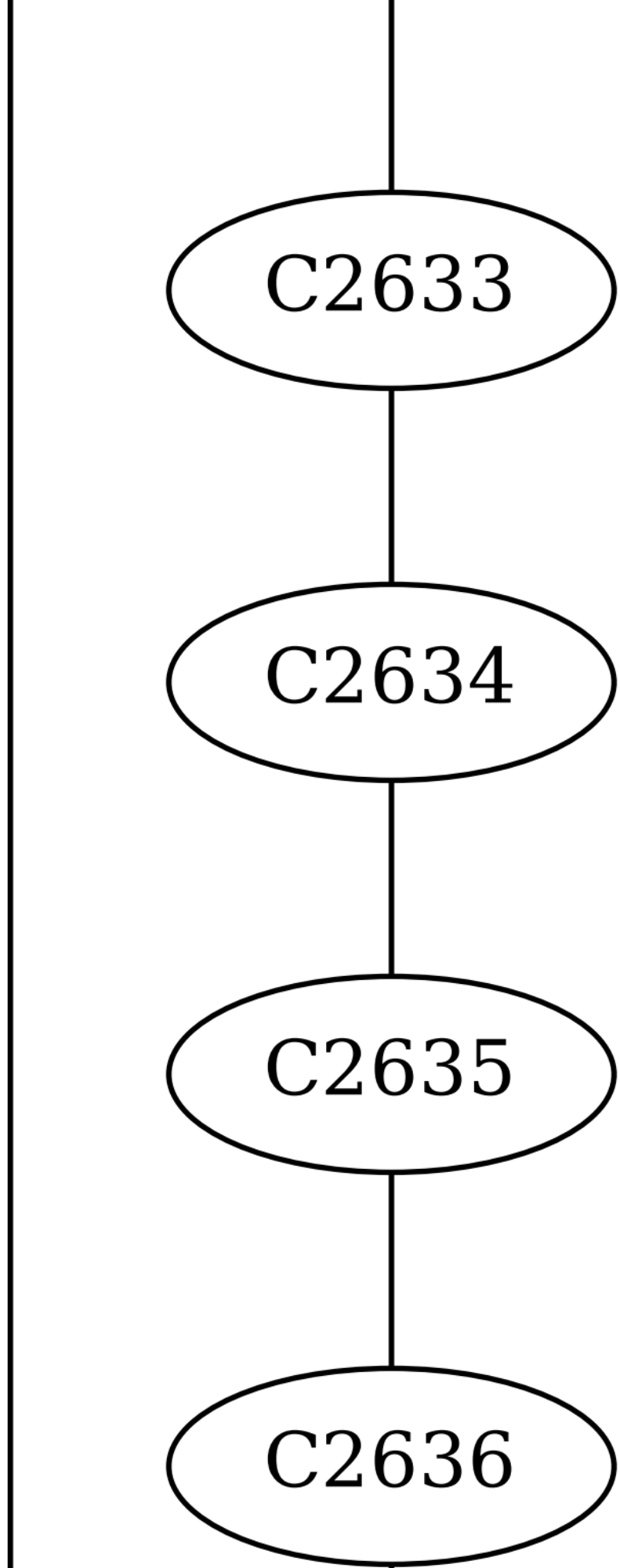
C2633
C2634
C2635
C2636

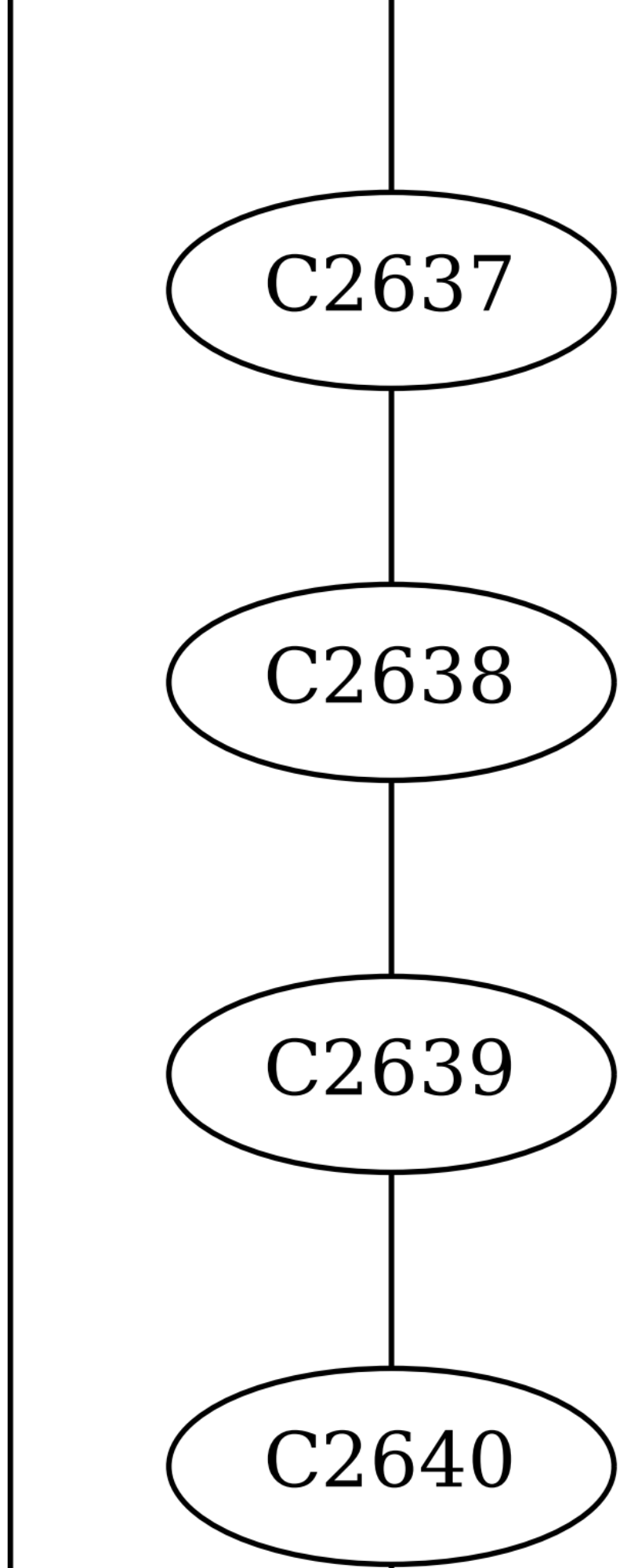
C2637
C2638
C2639
C2640

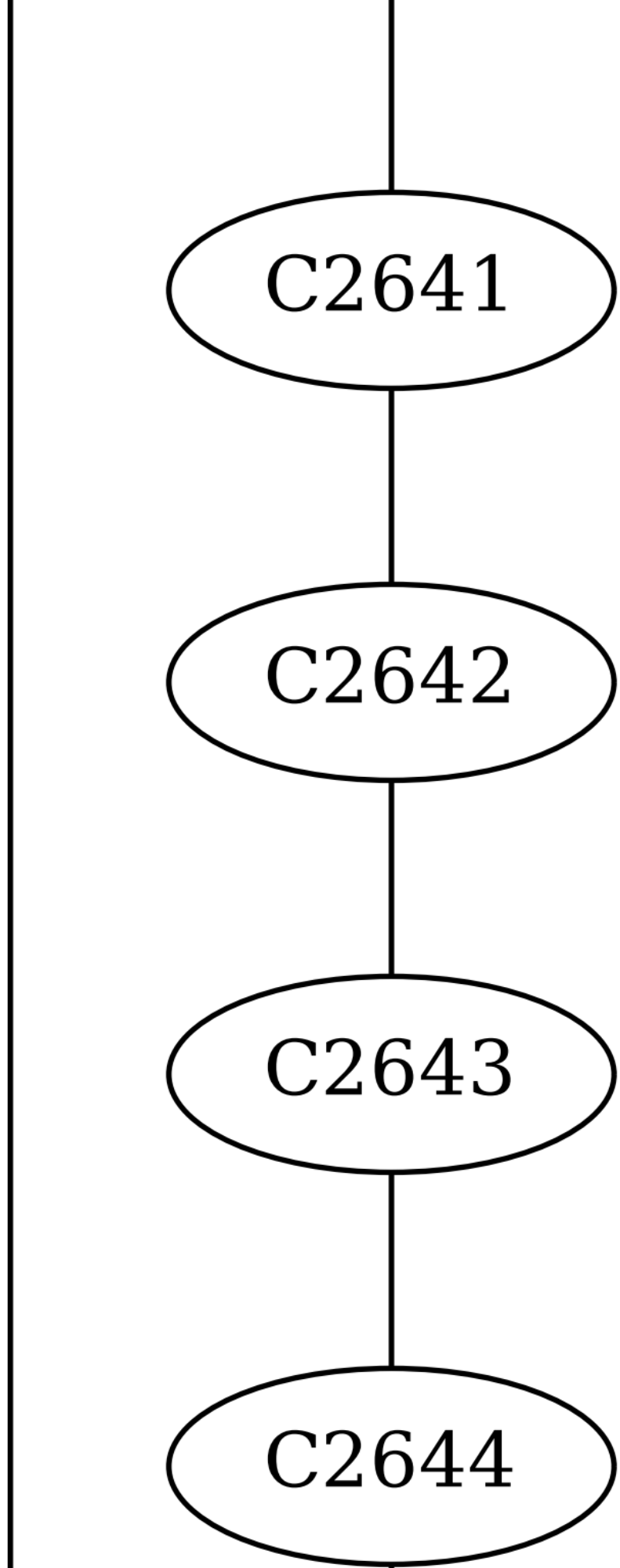
C2641
C2642
C2643
C2644

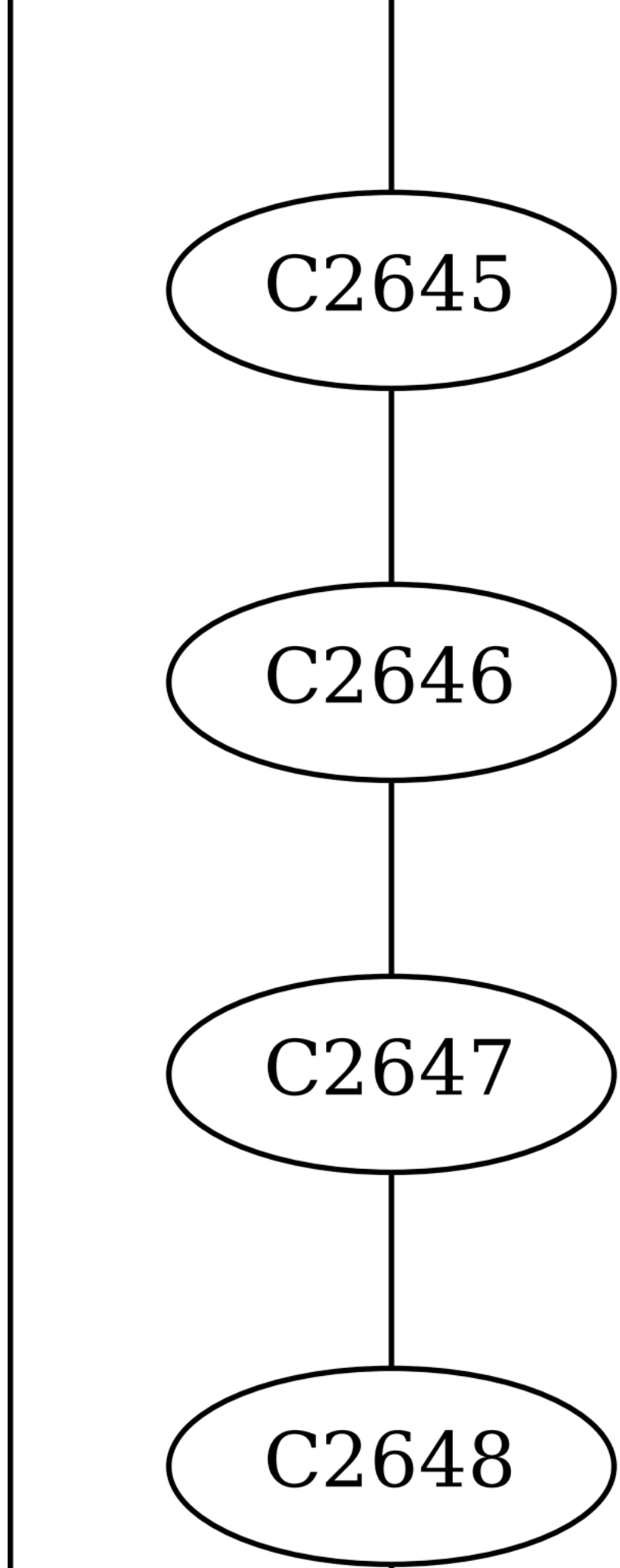
C2645
C2646
C2647
C2648

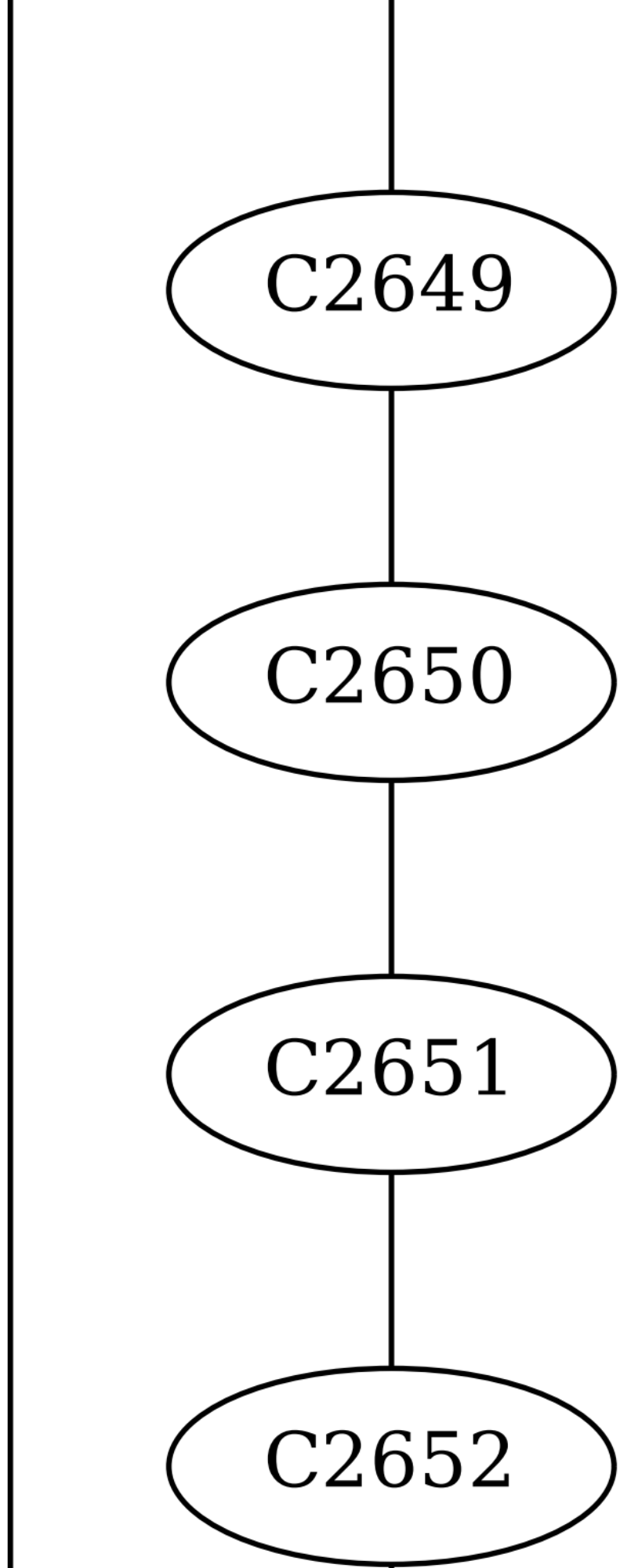
C2649
C2650
C2651
C2652

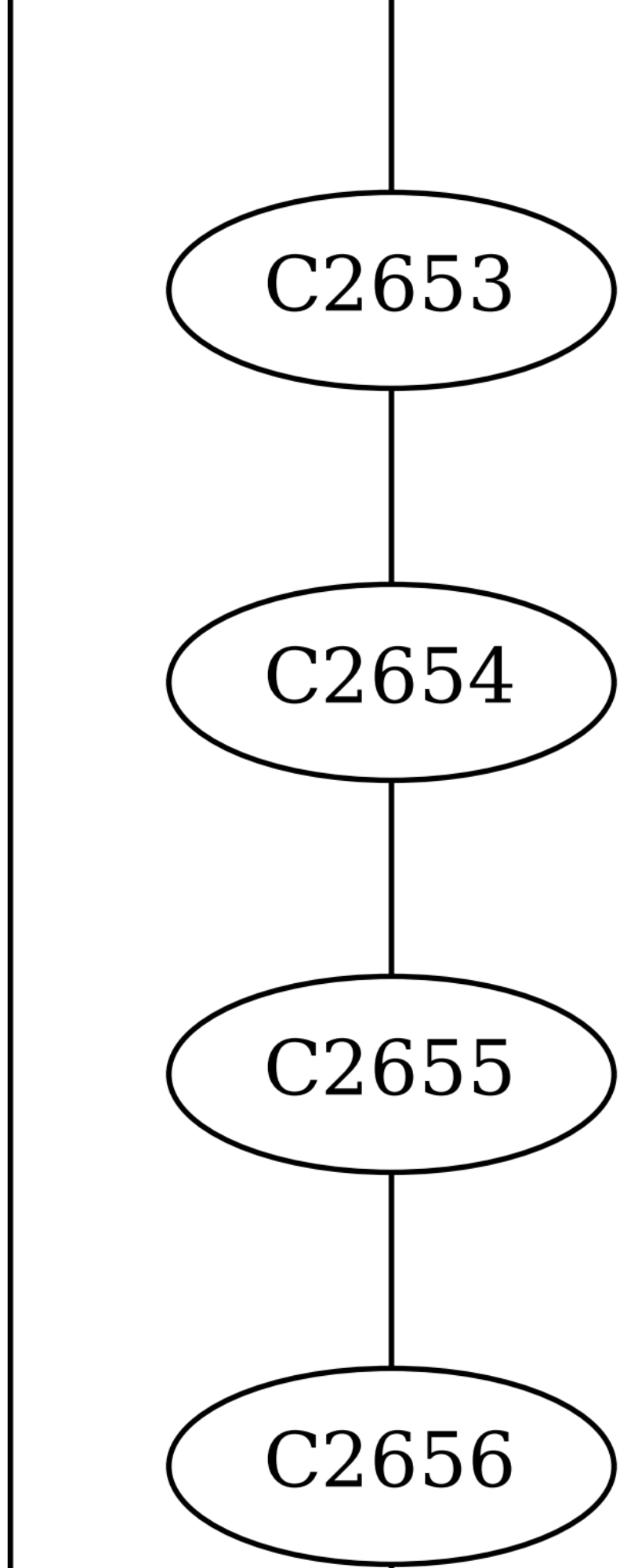
C2653
C2654
C2655
C2656

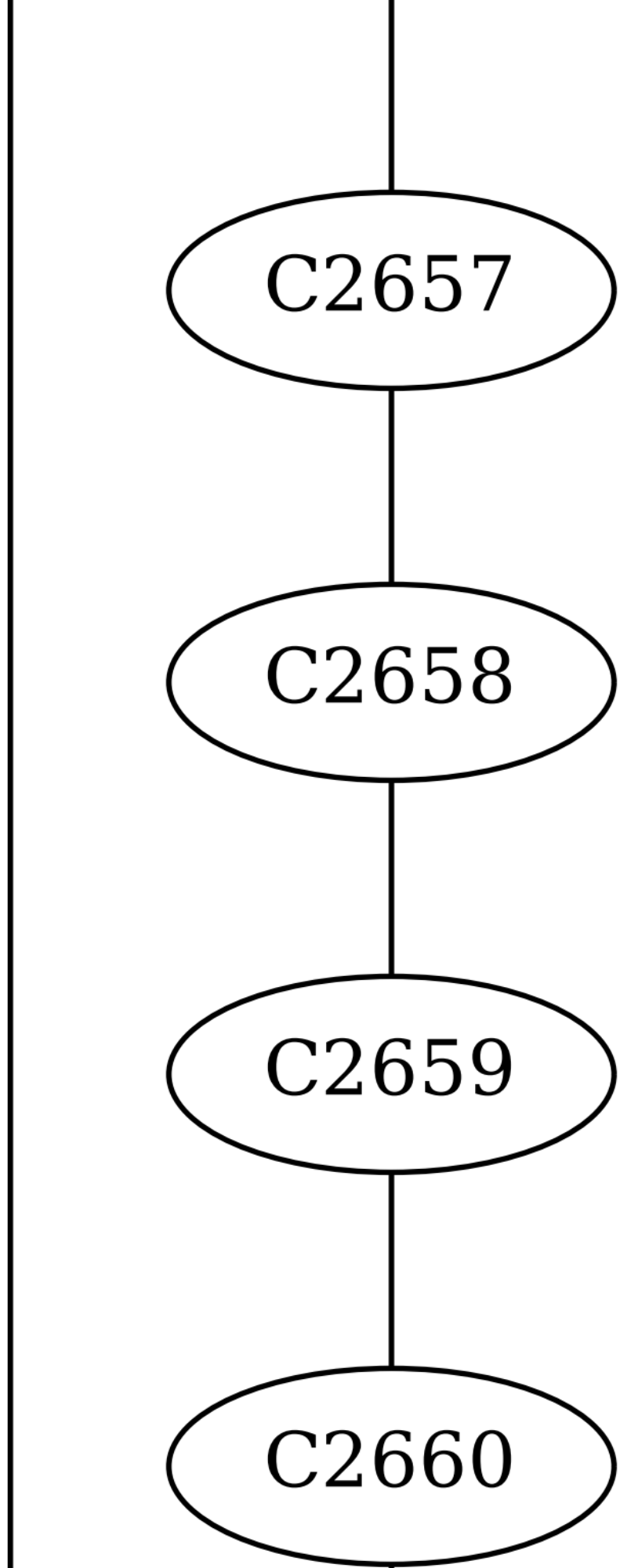
C2657
C2658
C2659
C2660

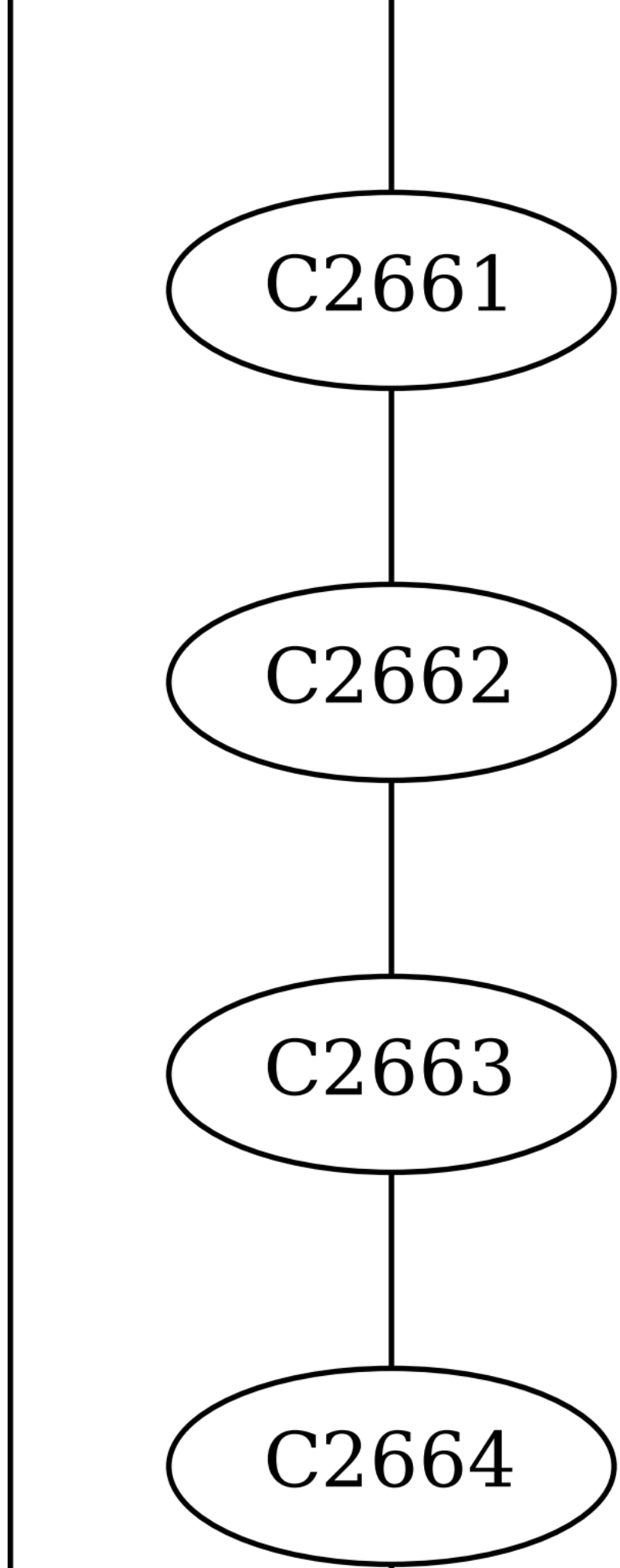
C2661
C2662
C2663
C2664

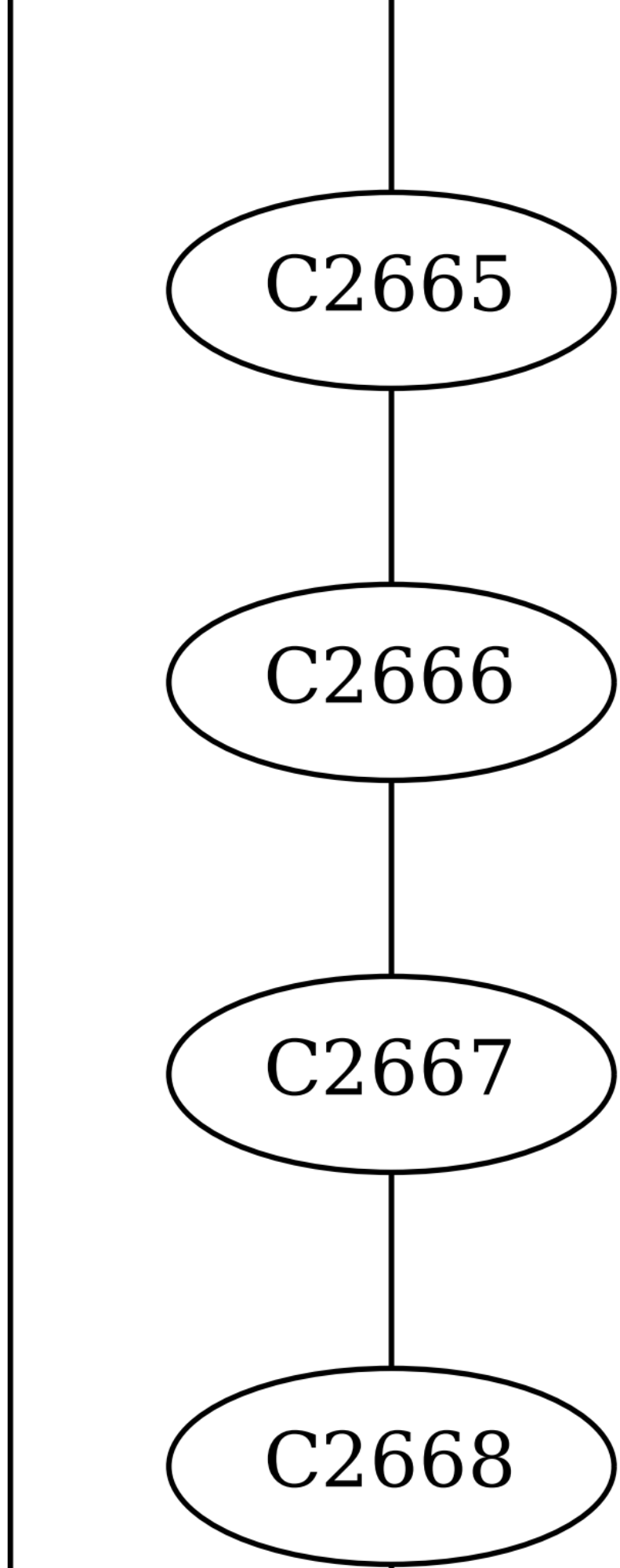
C2665
C2666
C2667
C2668

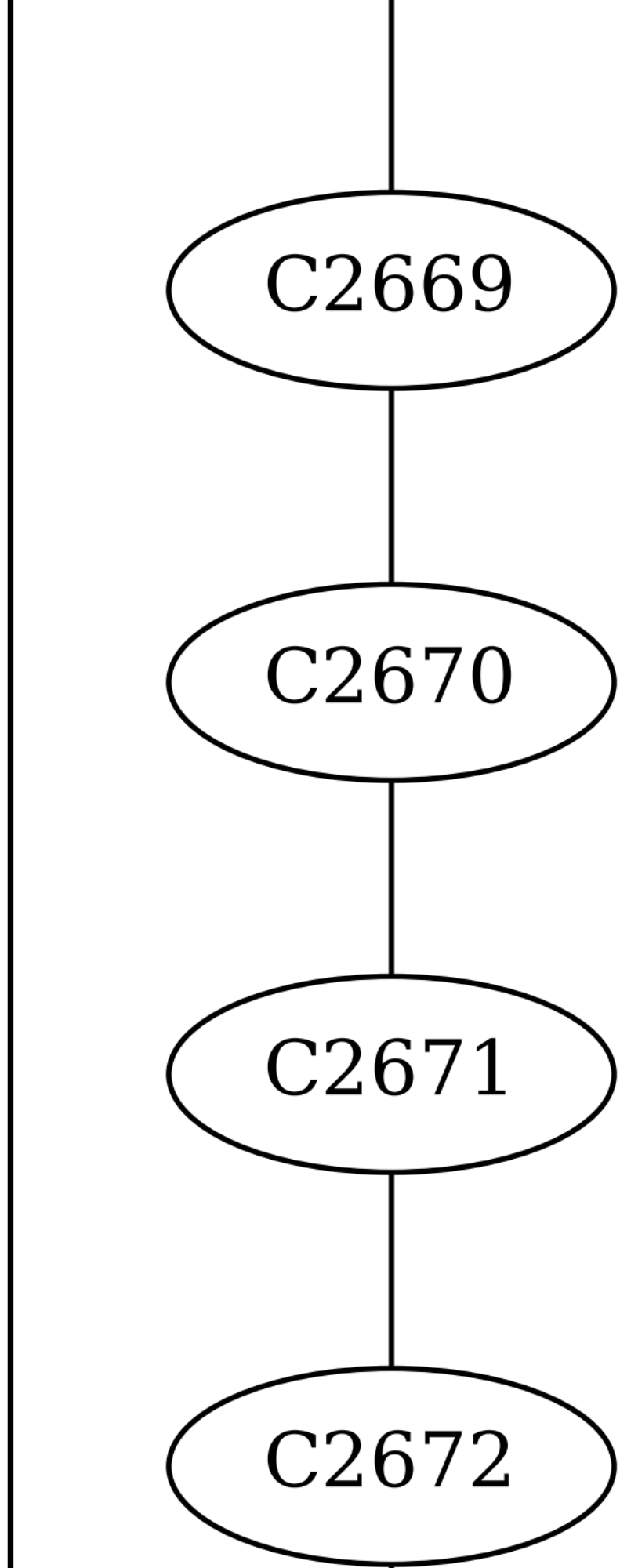
C2669
C2670
C2671
C2672

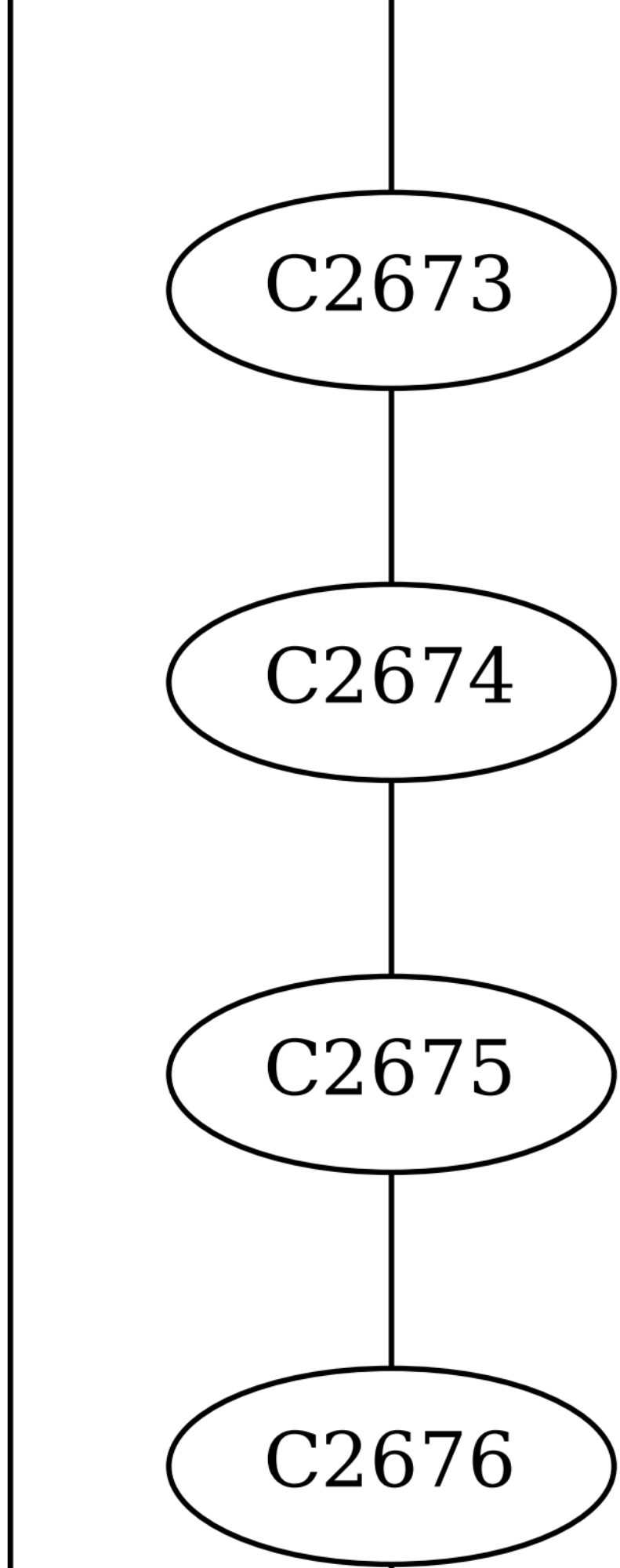
C2673
C2674
C2675
C2676

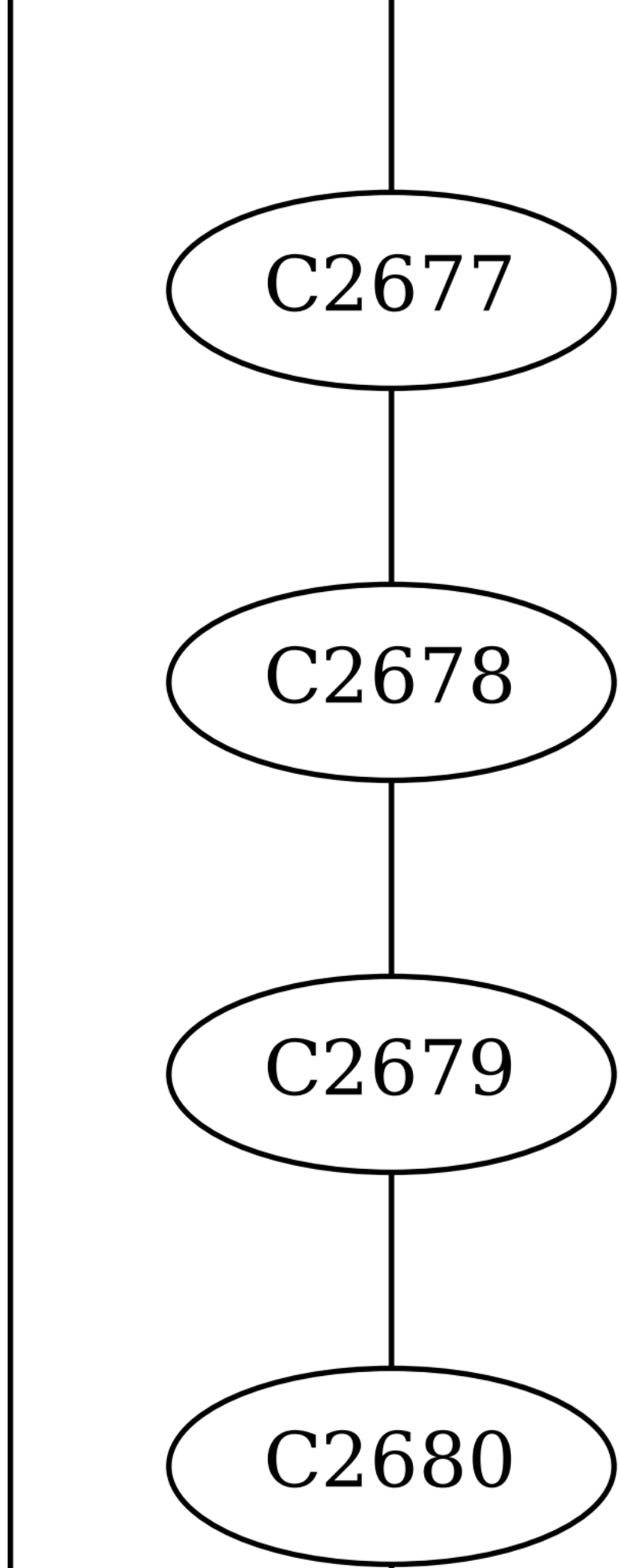
C2677
C2678
C2679
C2680

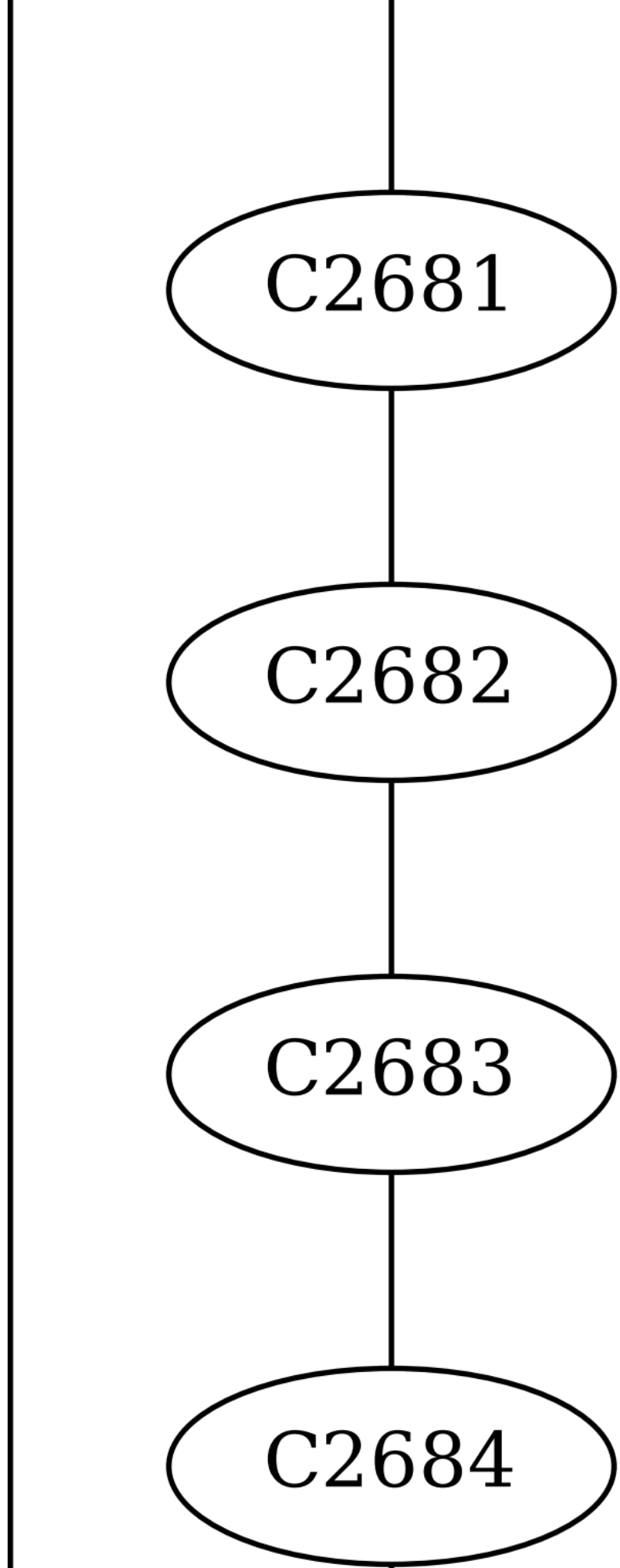
C2681
C2682
C2683
C2684

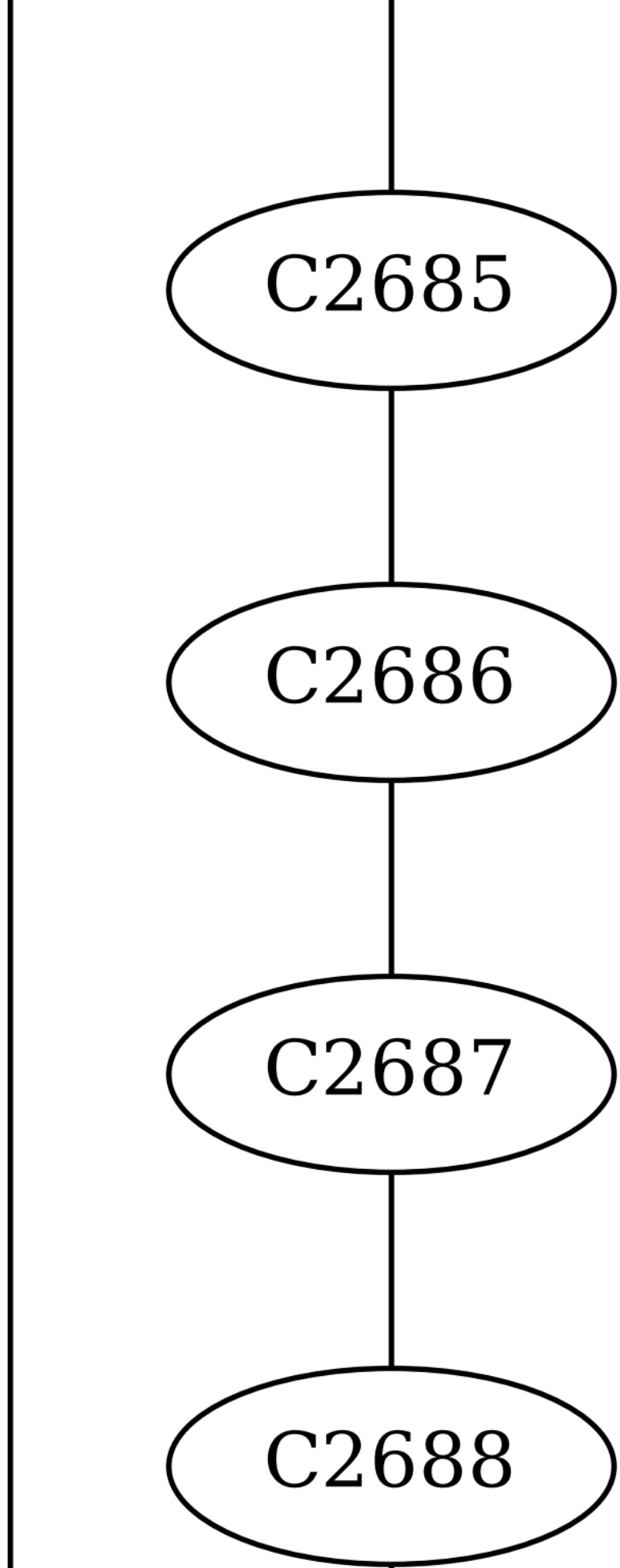
C2685
C2686
C2687
C2688

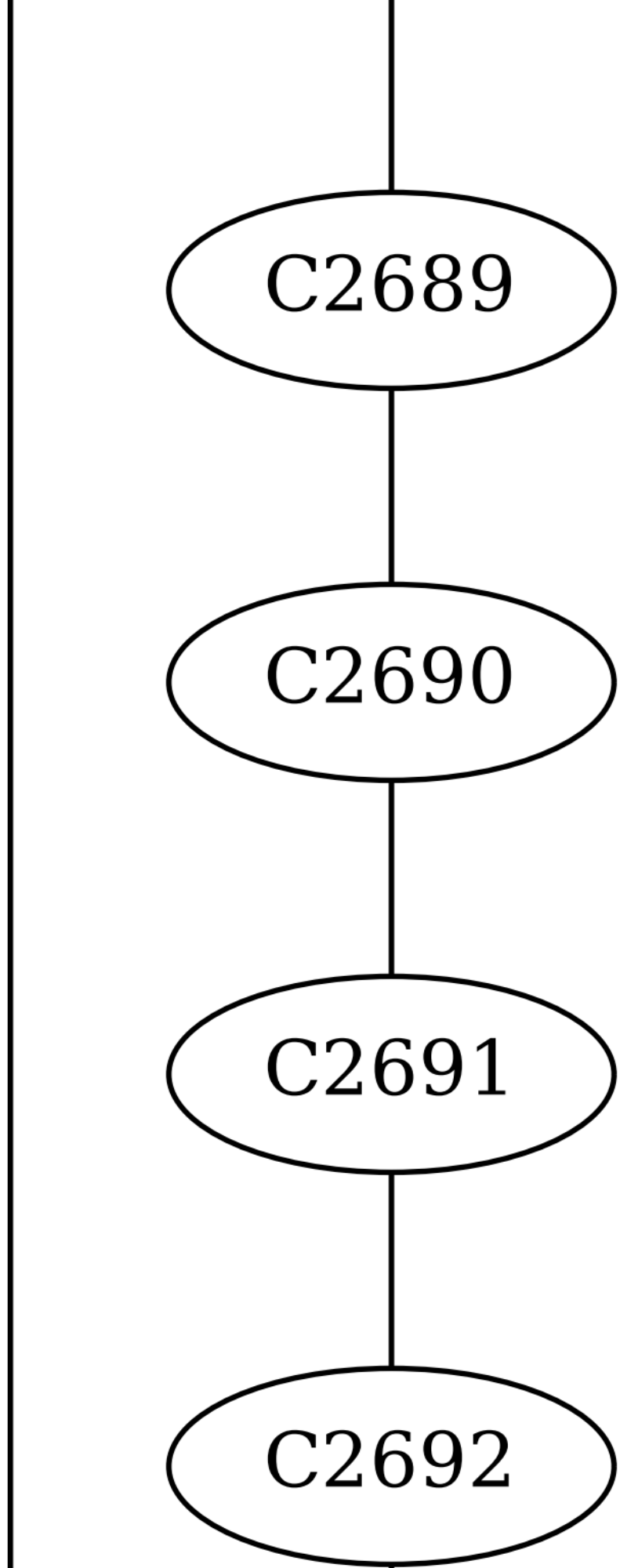
C2689
C2690
C2691
C2692

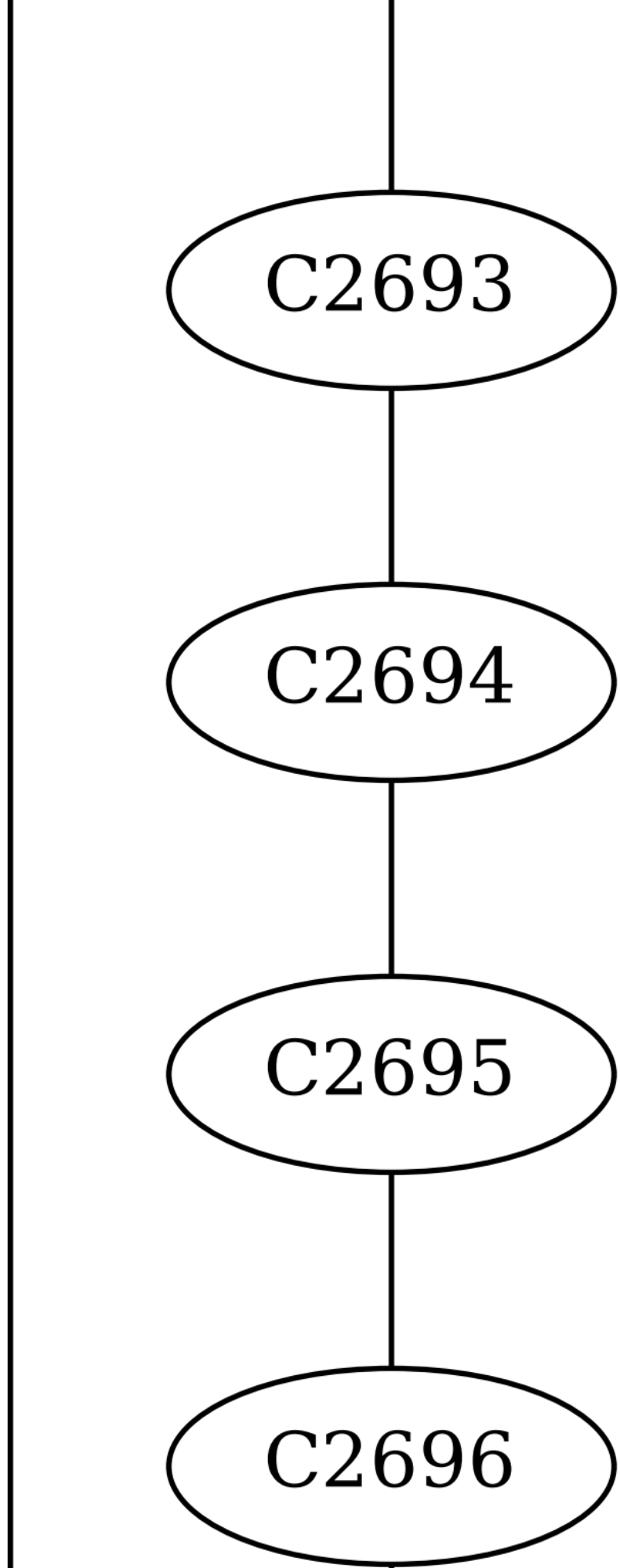
C2693
C2694
C2695
C2696

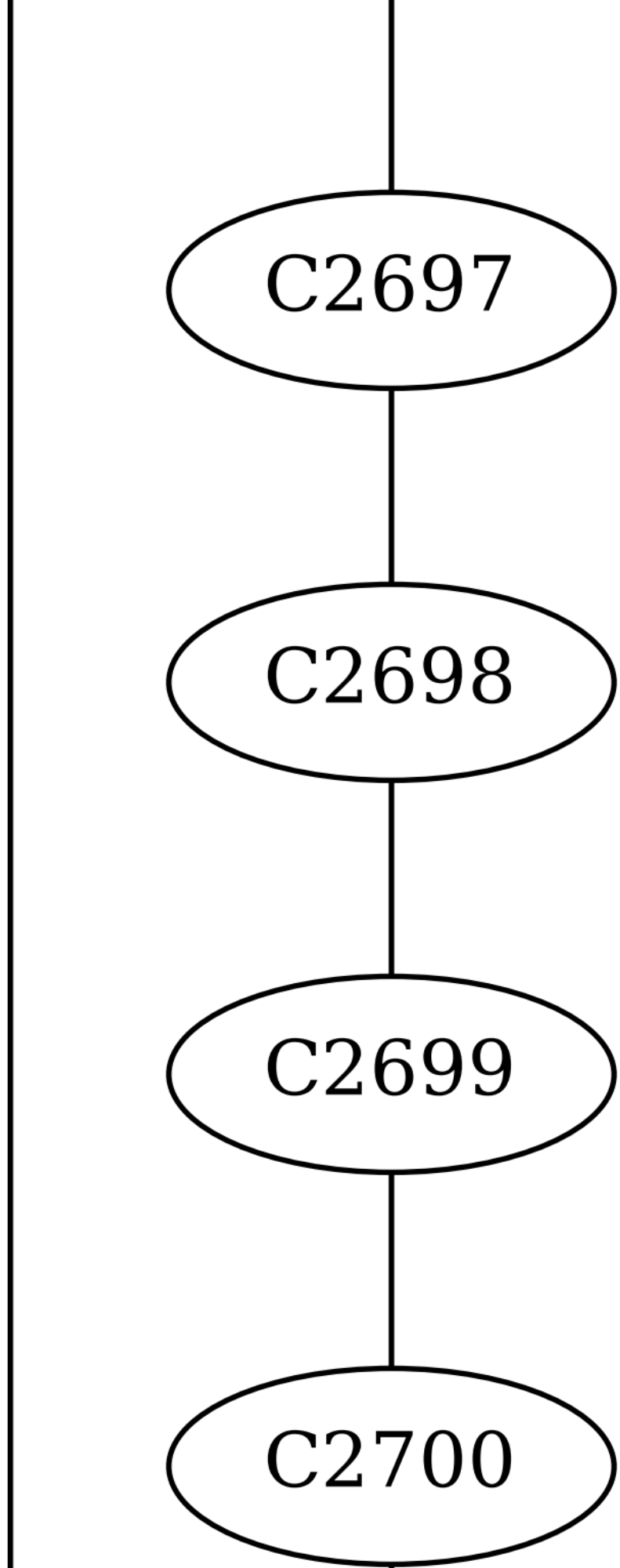
C2697
C2698
C2699
C2700

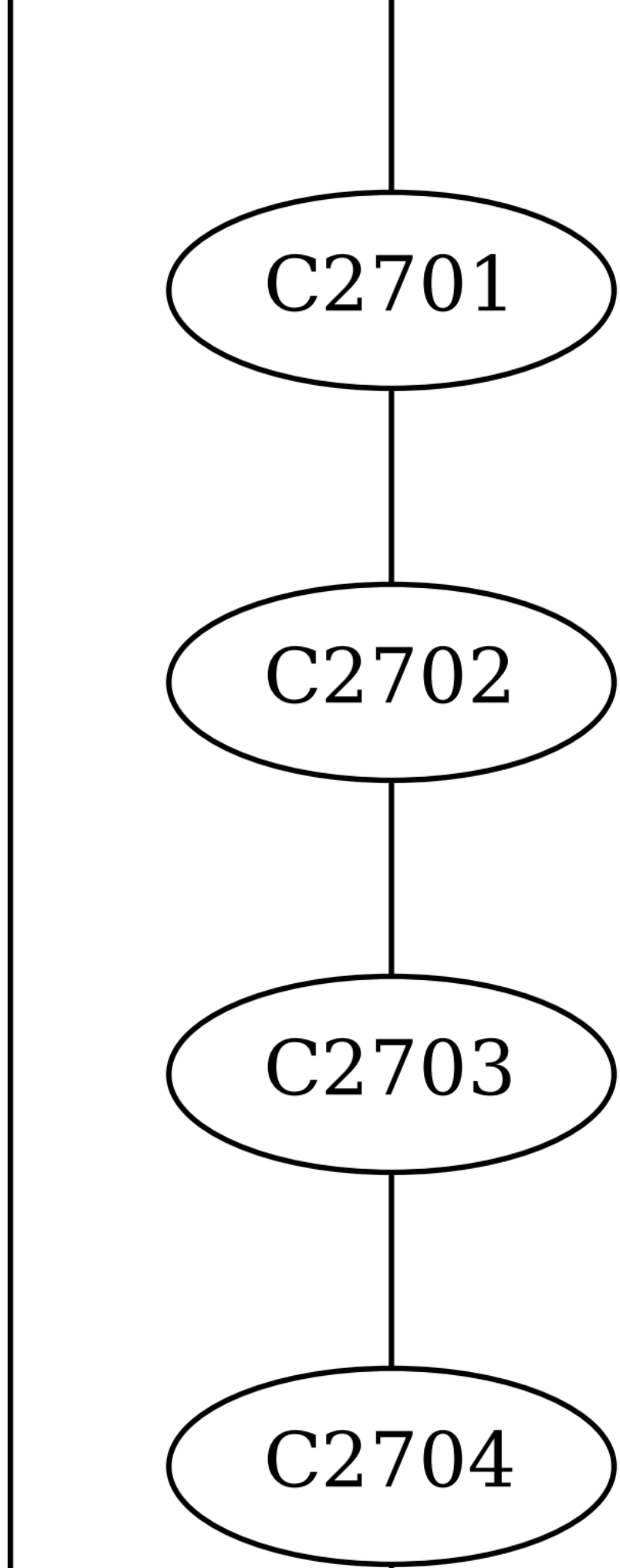
C2701
C2702
C2703
C2704

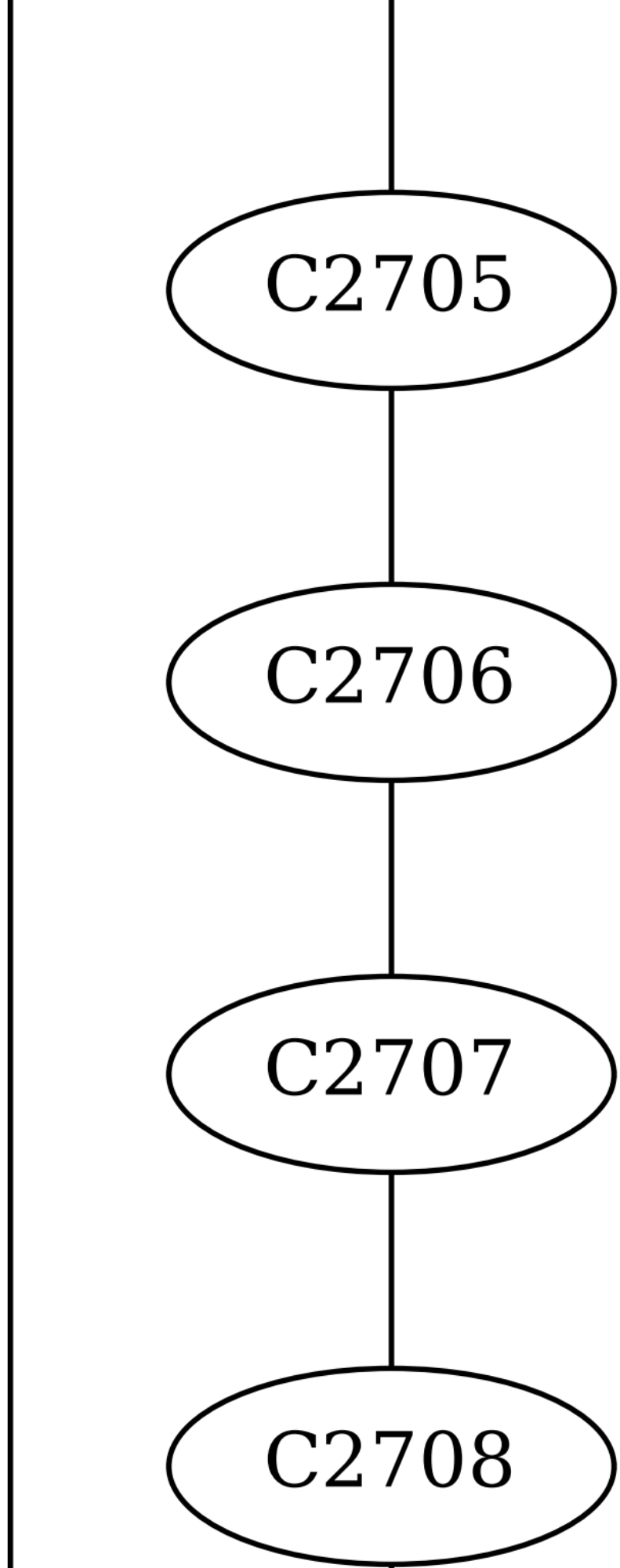
C2705
C2706
C2707
C2708

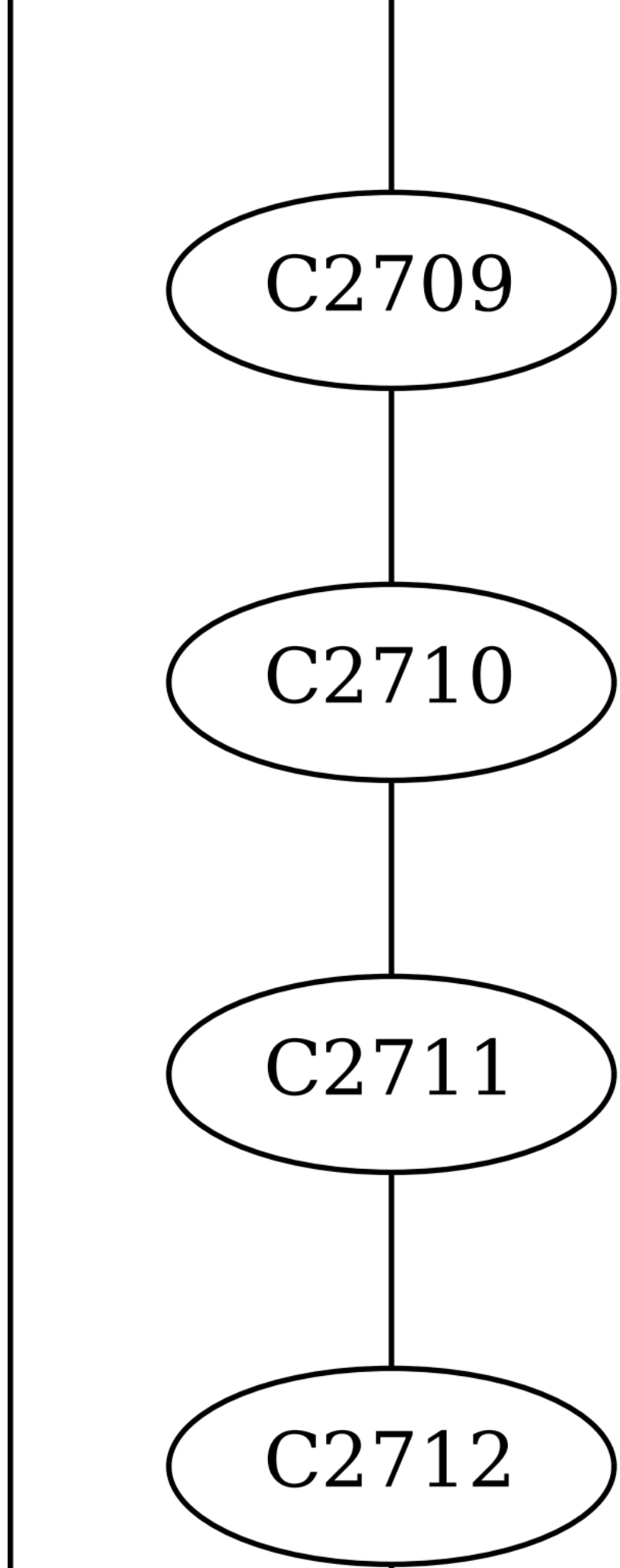
C2709
C2710
C2711
C2712

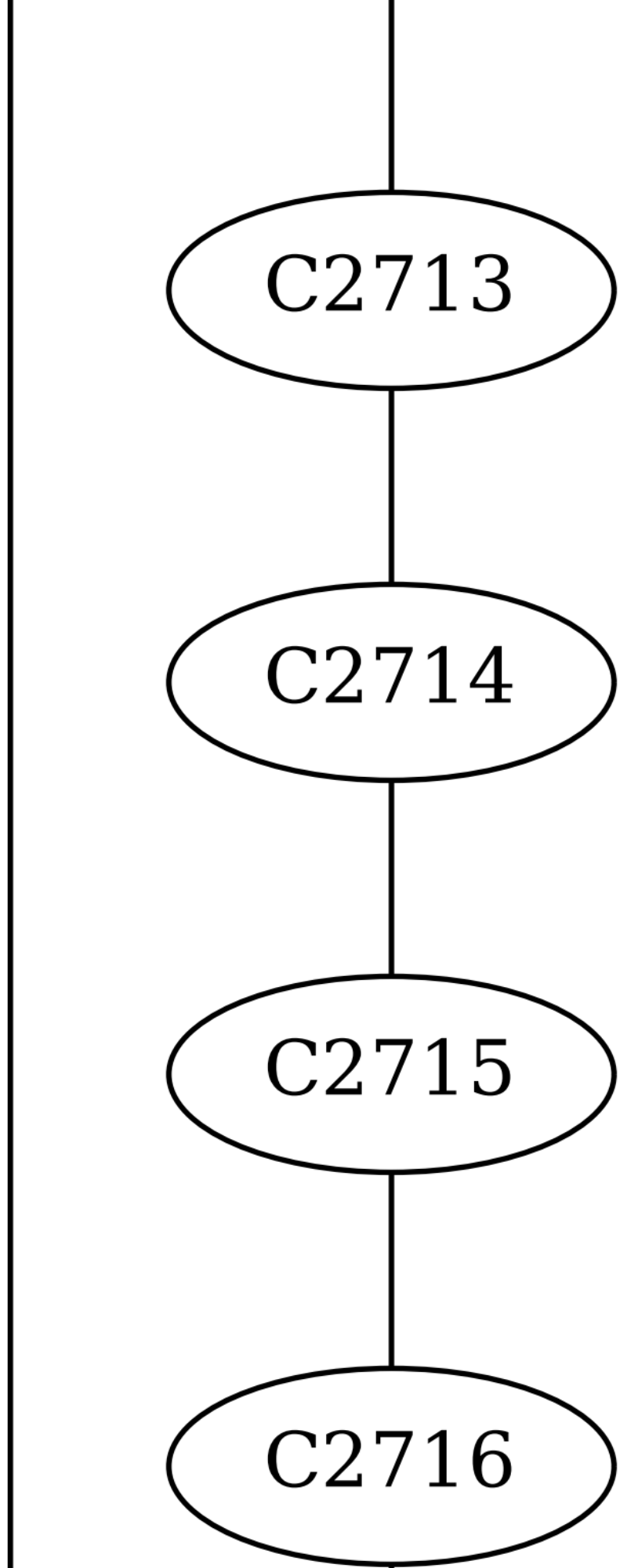
C2713
C2714
C2715
C2716

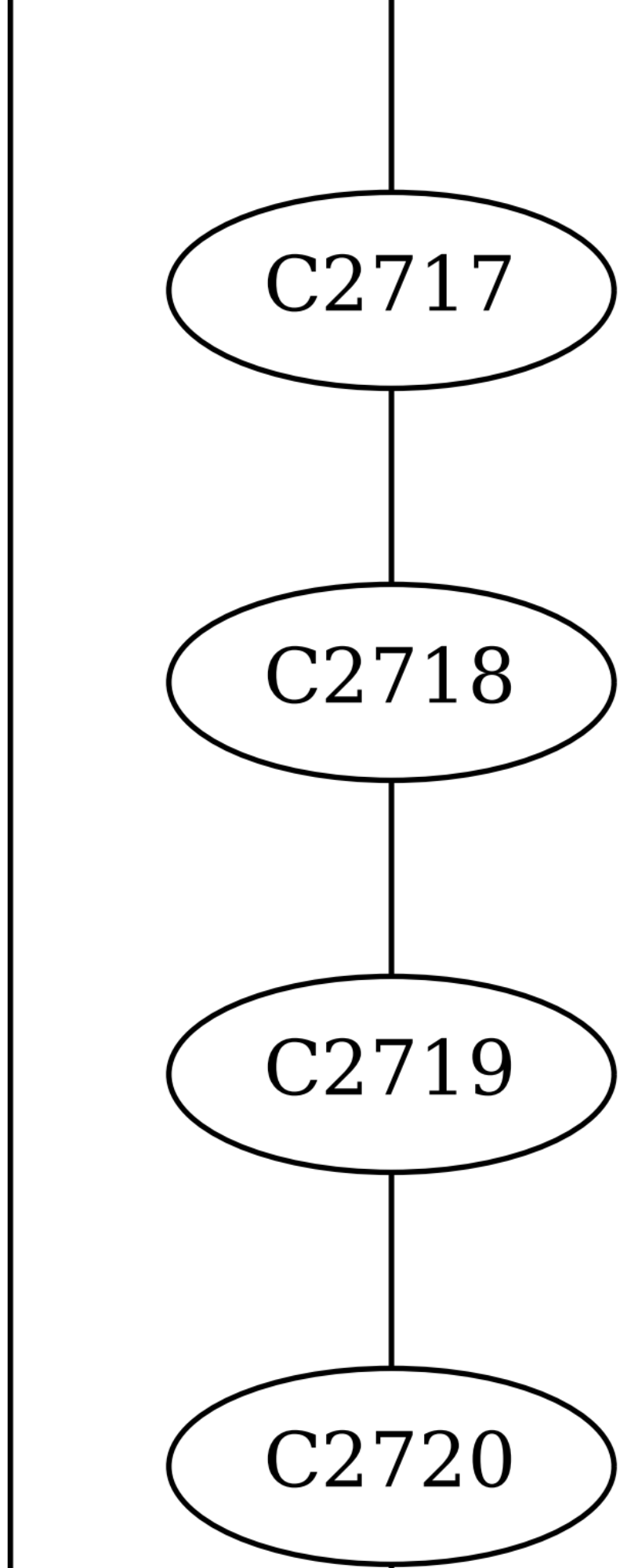
C2717
C2718
C2719
C2720

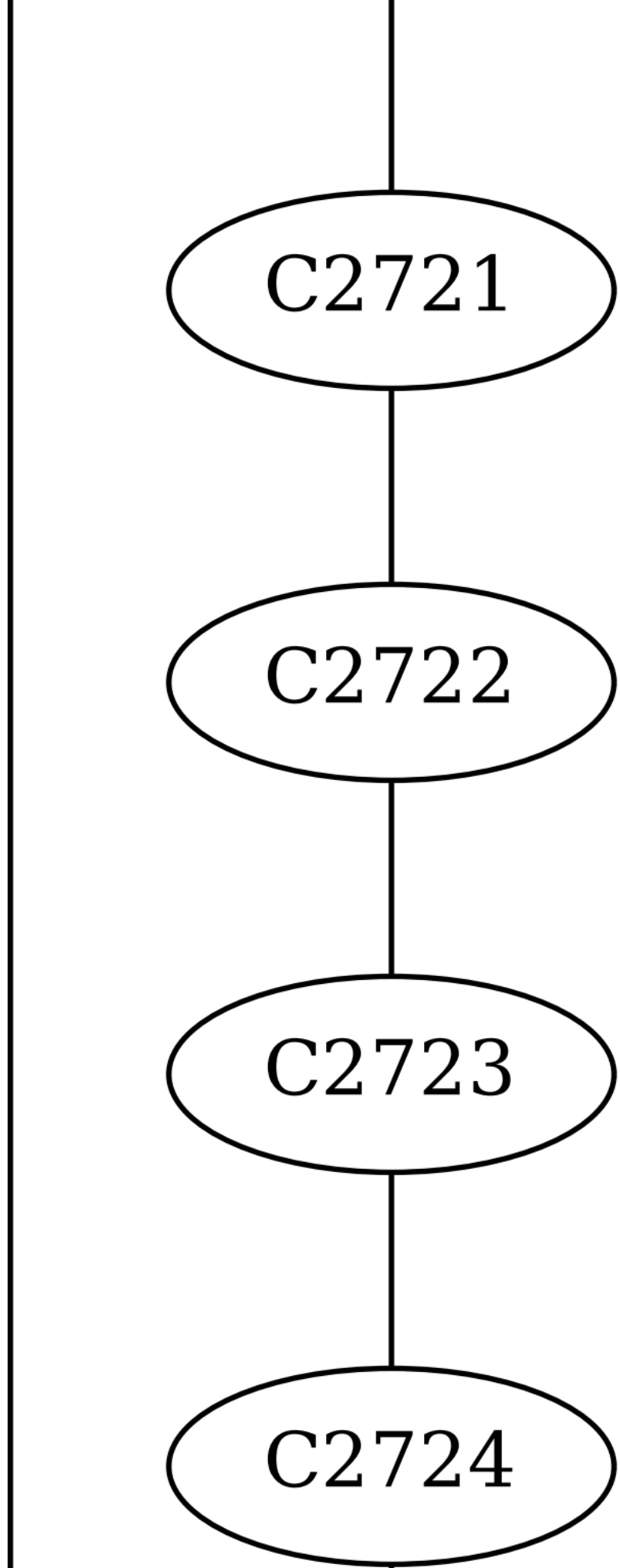
C2721
C2722
C2723
C2724

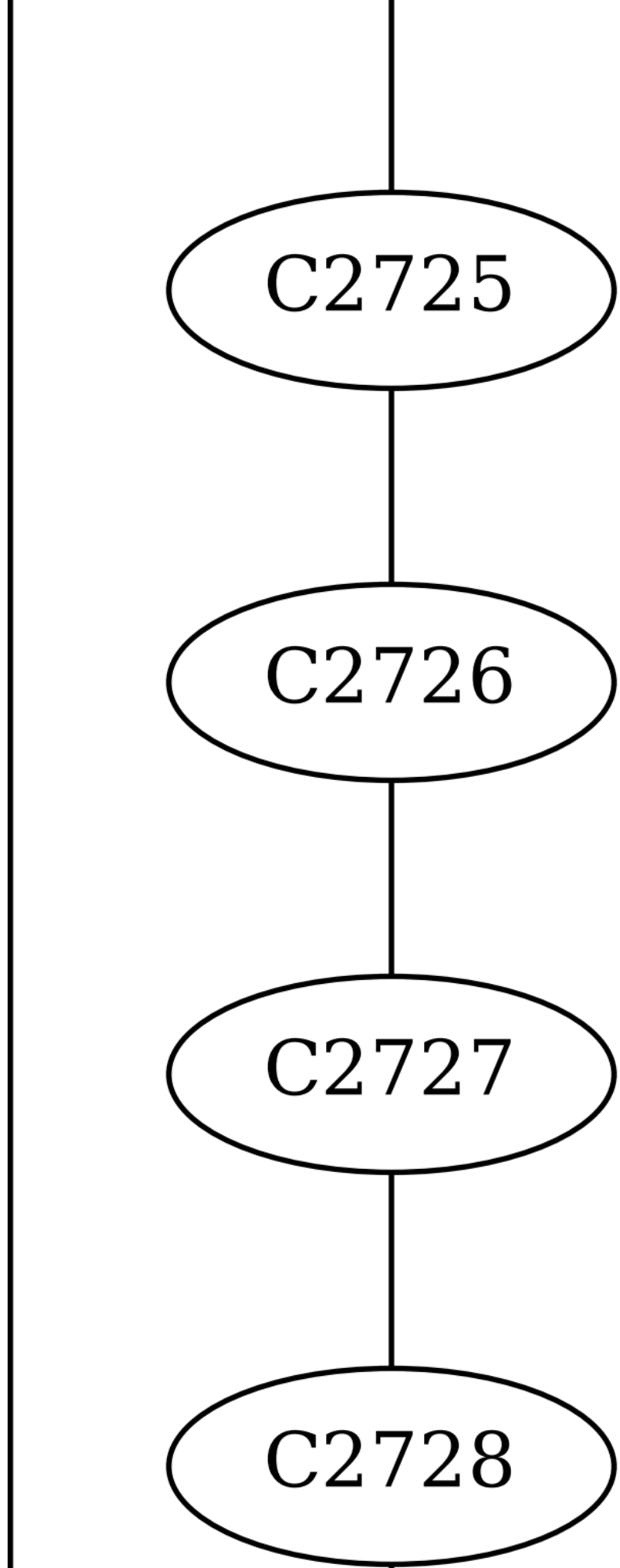
C2725
C2726
C2727
C2728

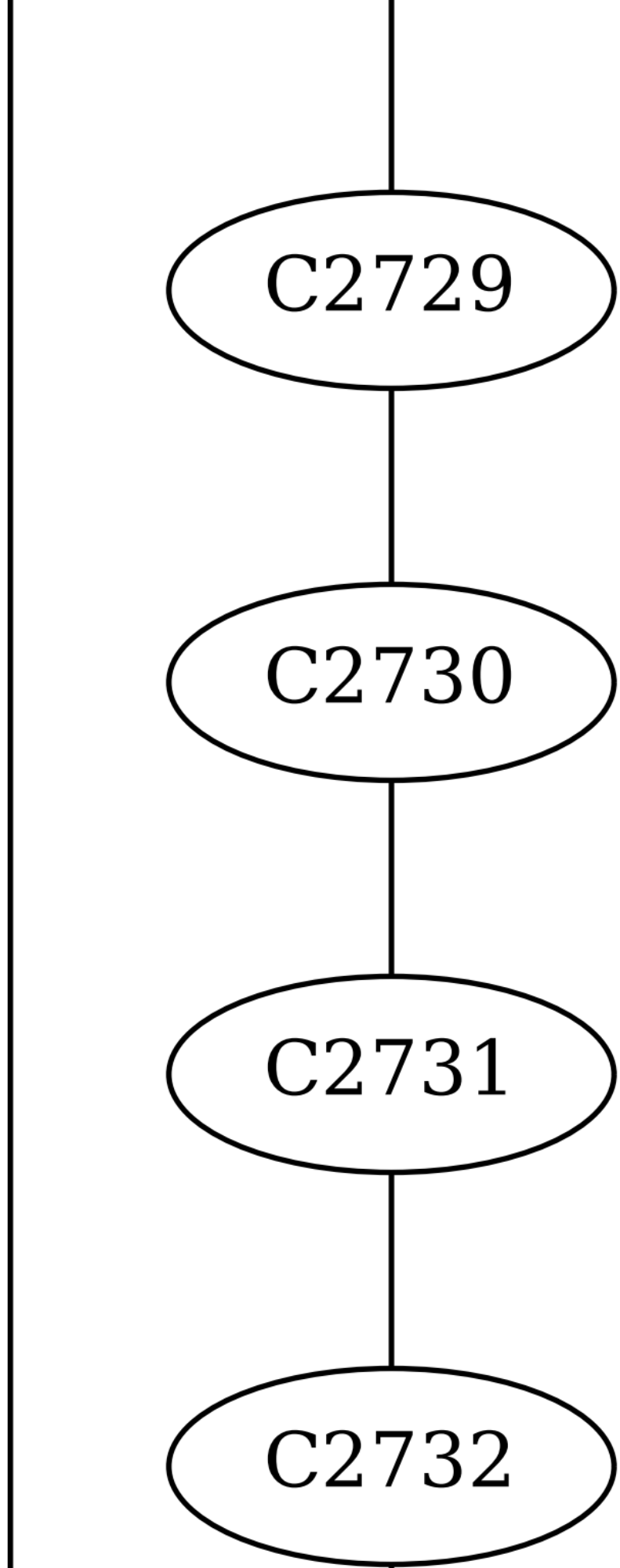
C2729
C2730
C2731
C2732

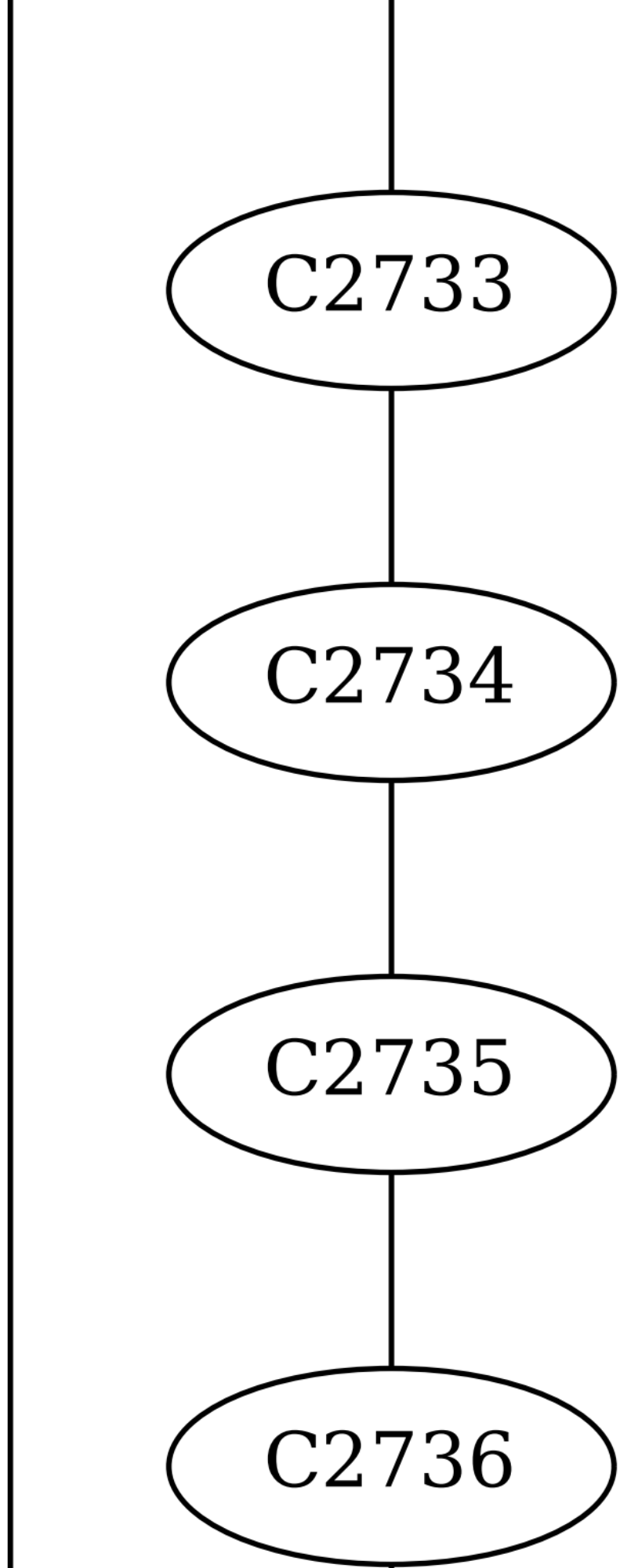
C2733
C2734
C2735
C2736

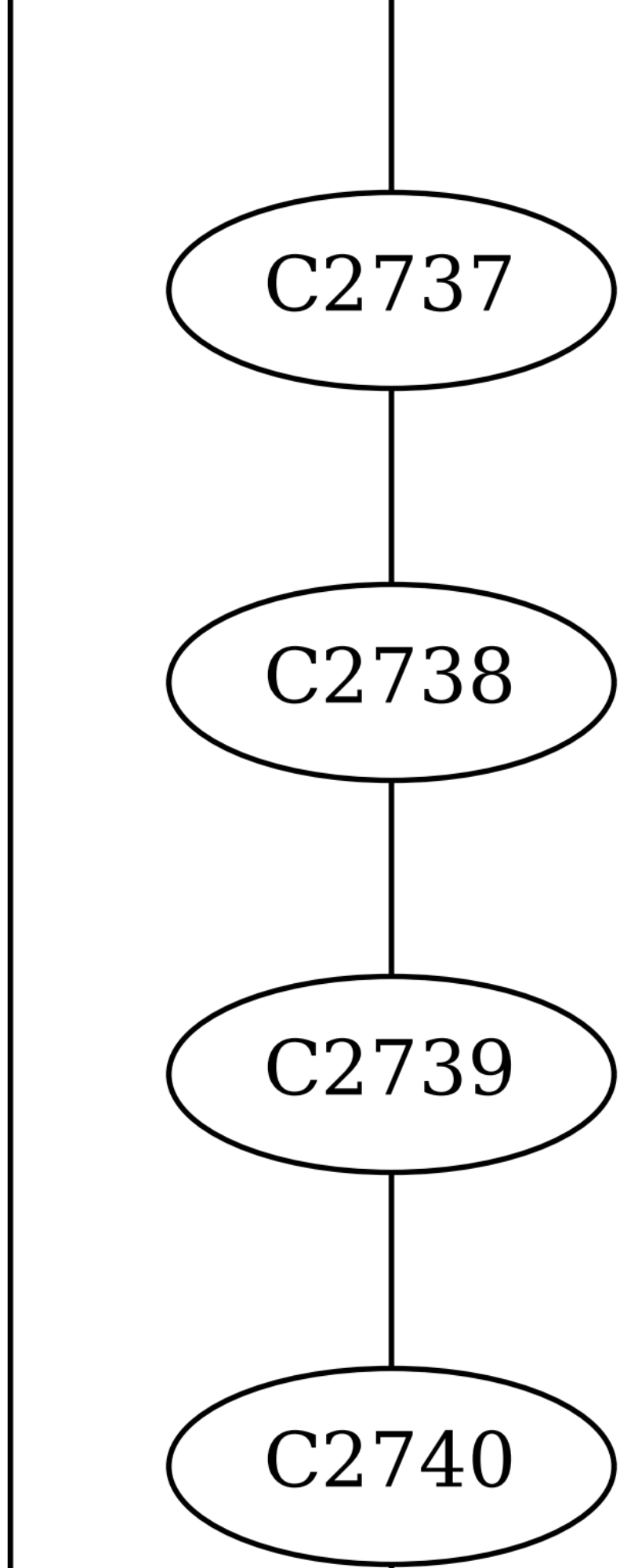
C2737
C2738
C2739
C2740

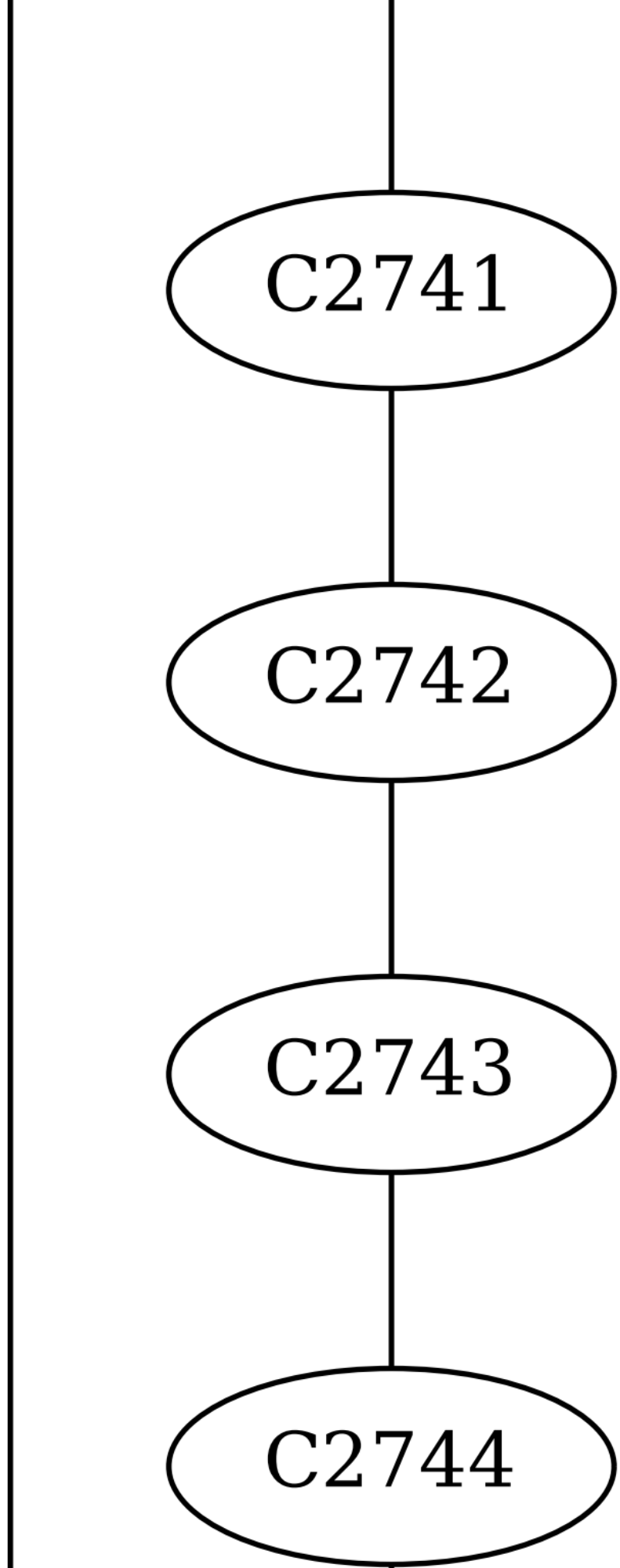
C2741
C2742
C2743
C2744

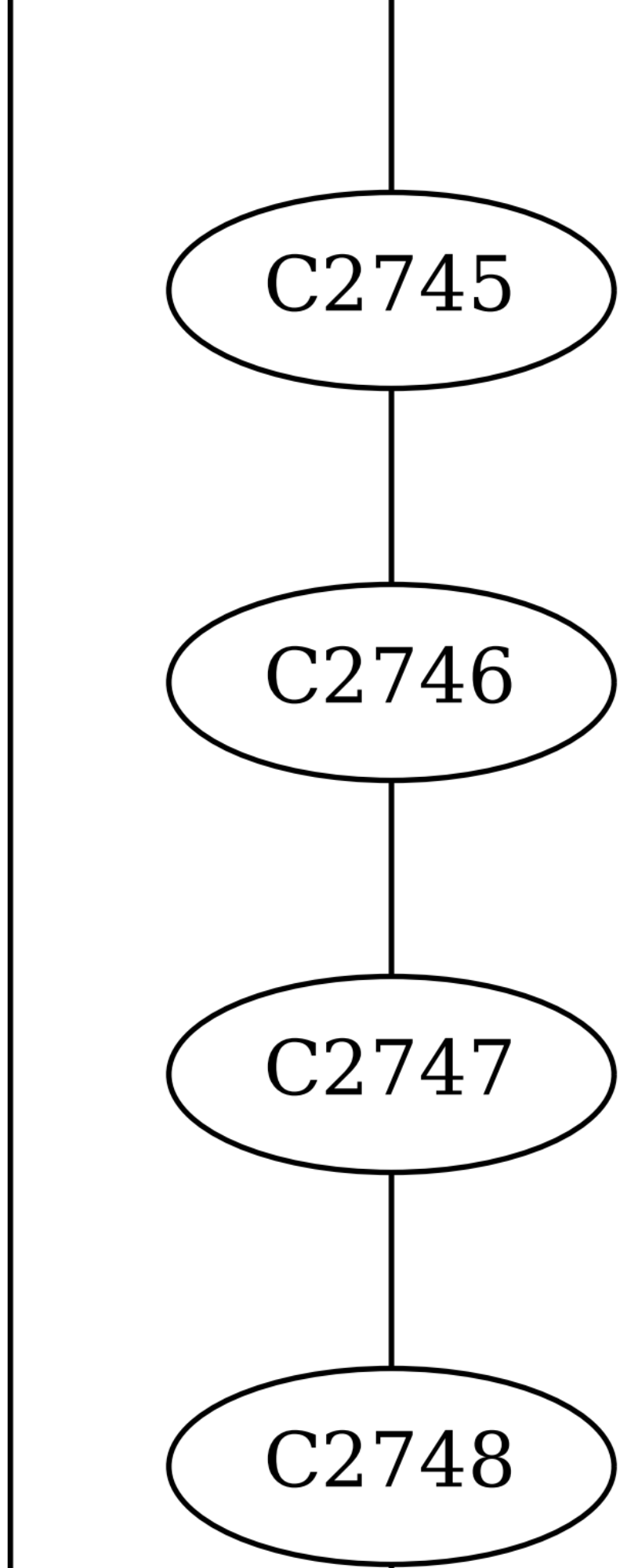
C2745
C2746
C2747
C2748

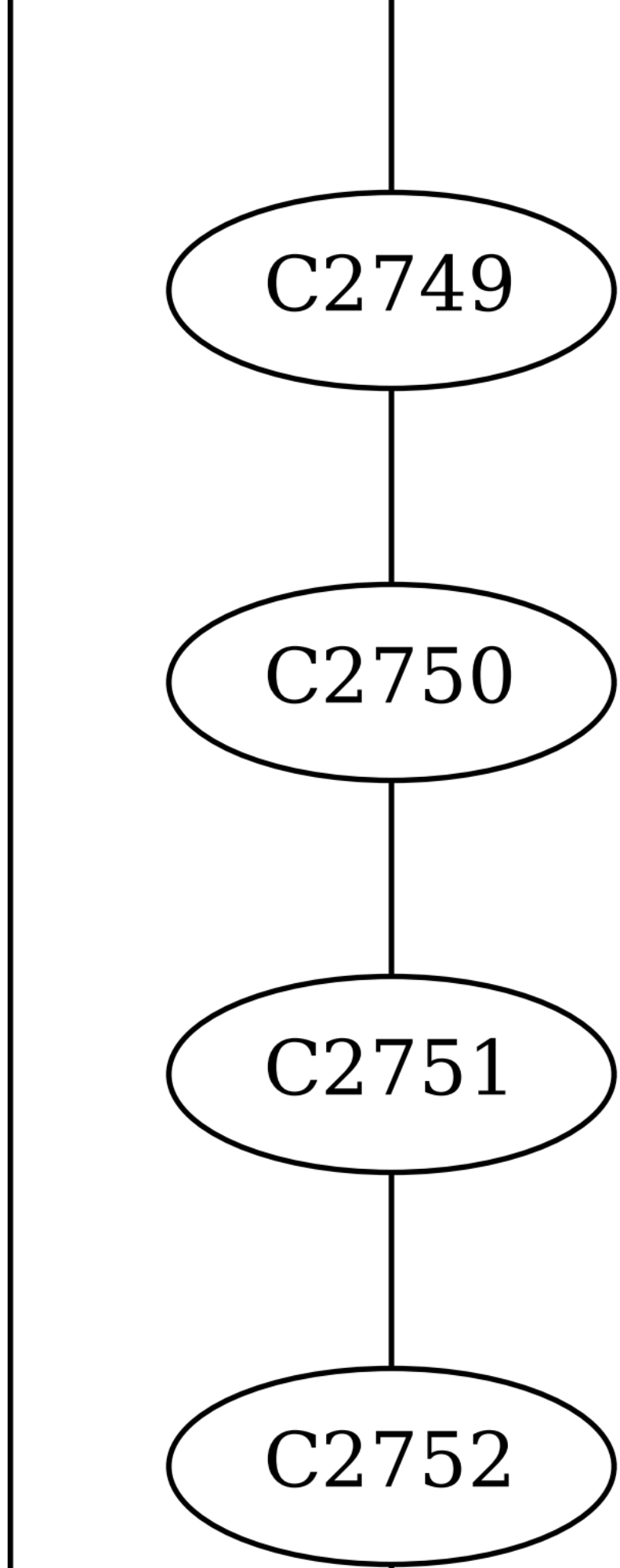
C2749
C2750
C2751
C2752

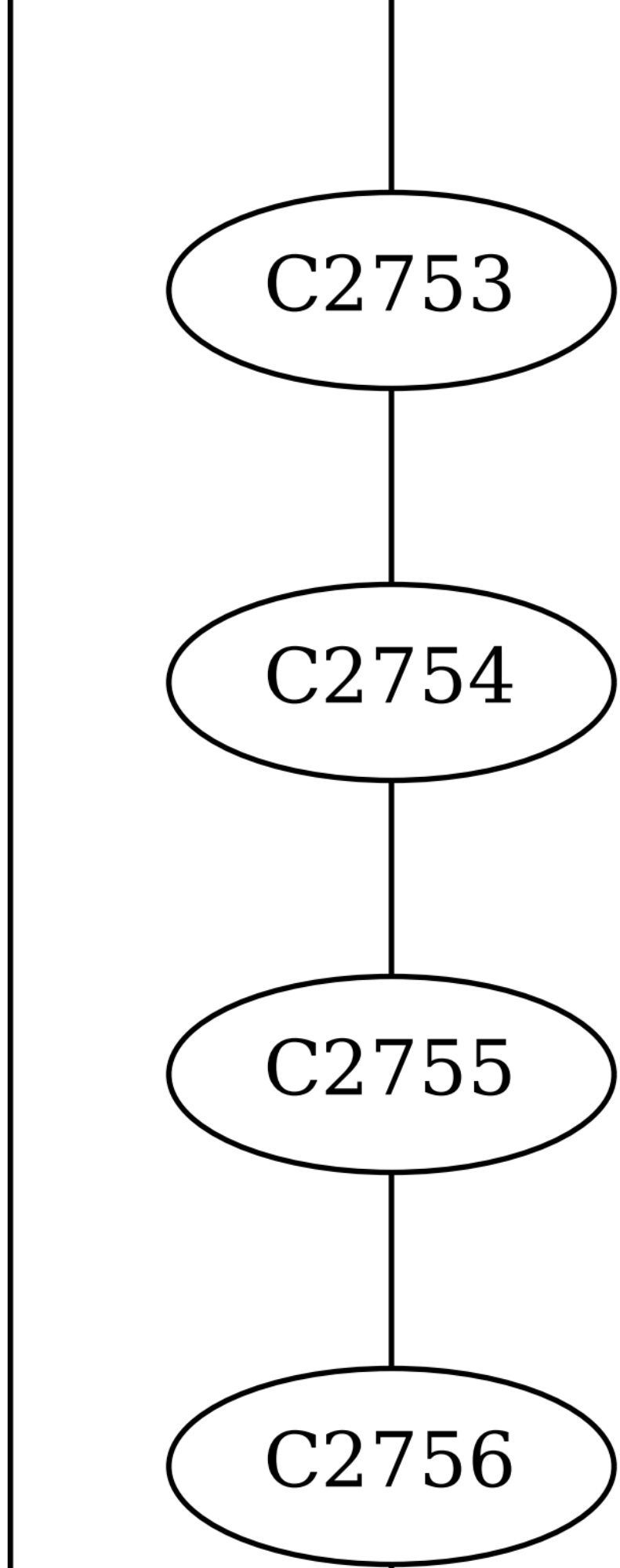
C2753
C2754
C2755
C2756

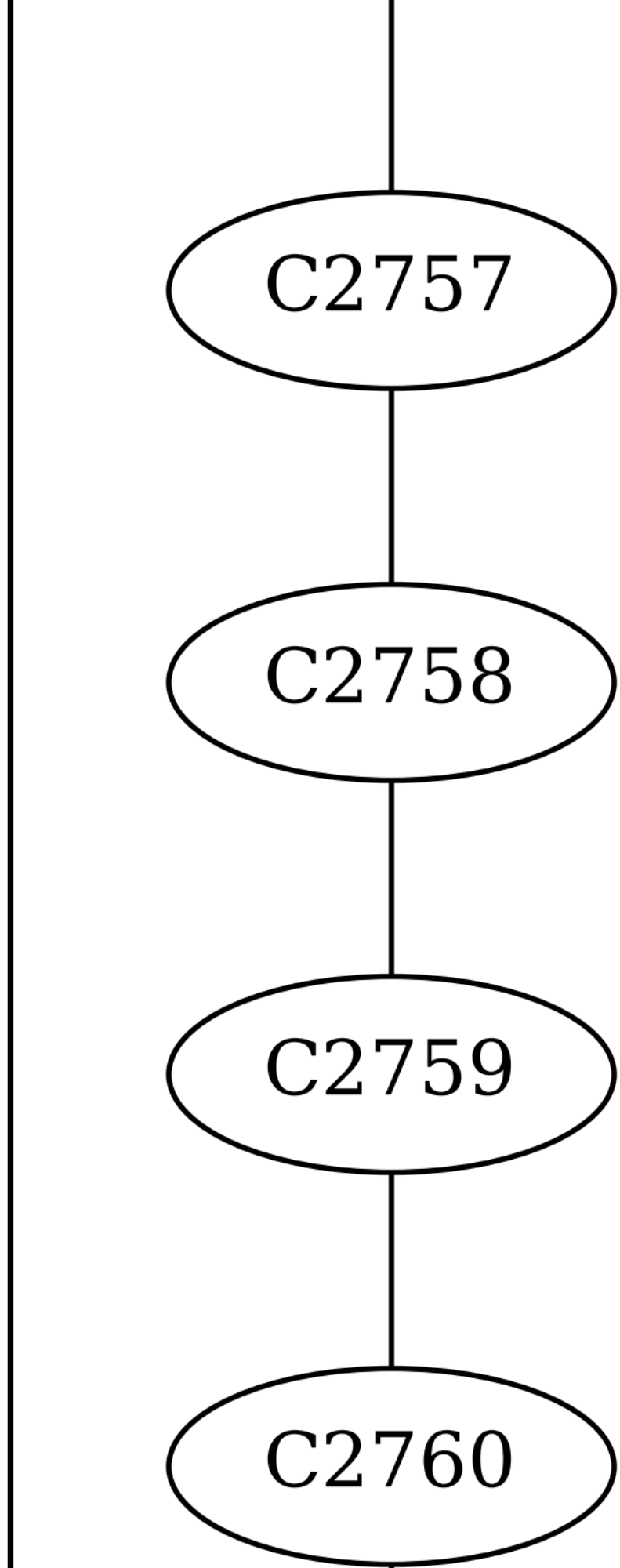
C2757
C2758
C2759
C2760

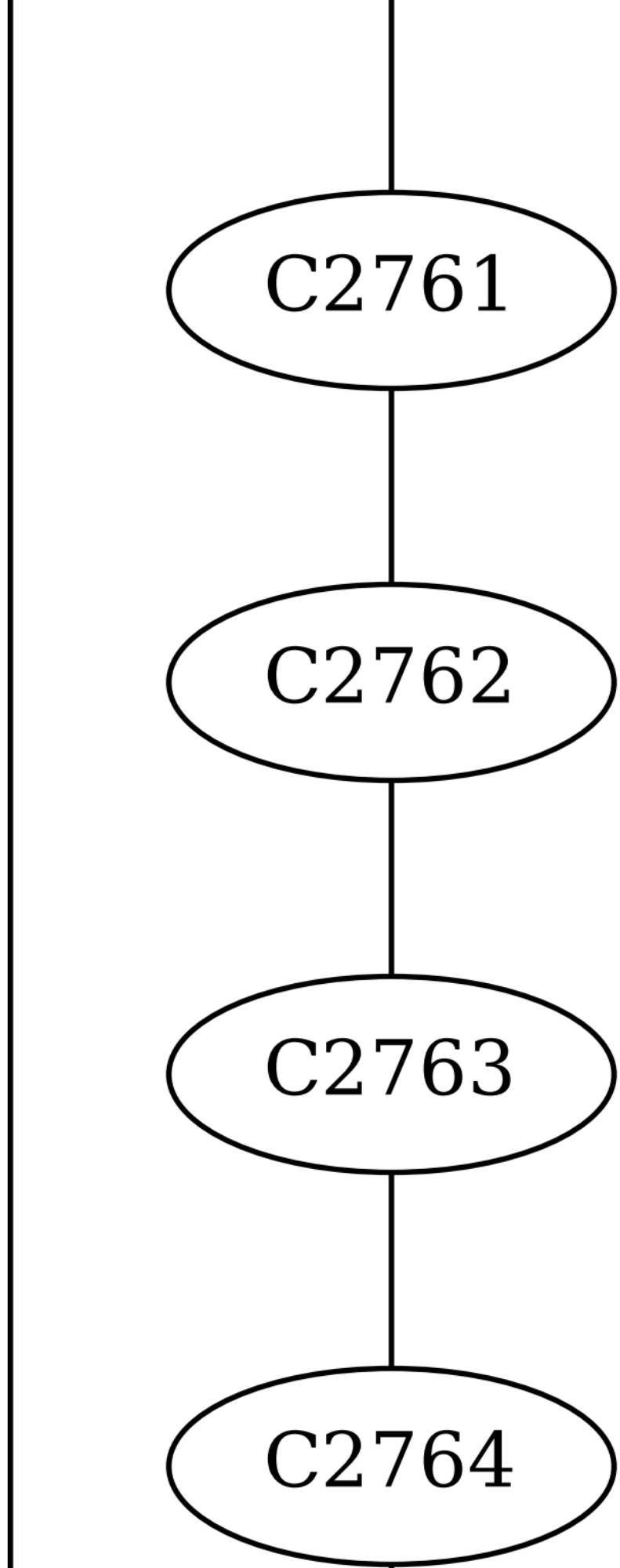
C2761
C2762
C2763
C2764

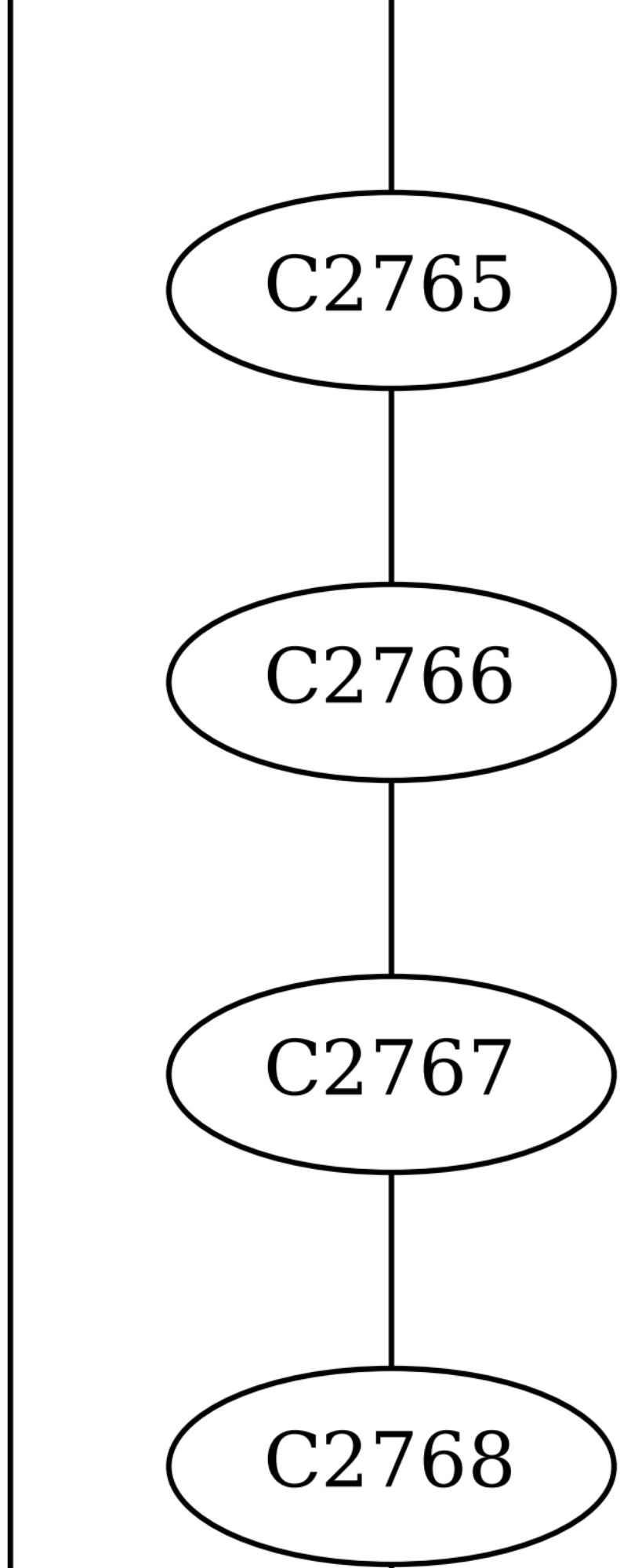
C2765
C2766
C2767
C2768

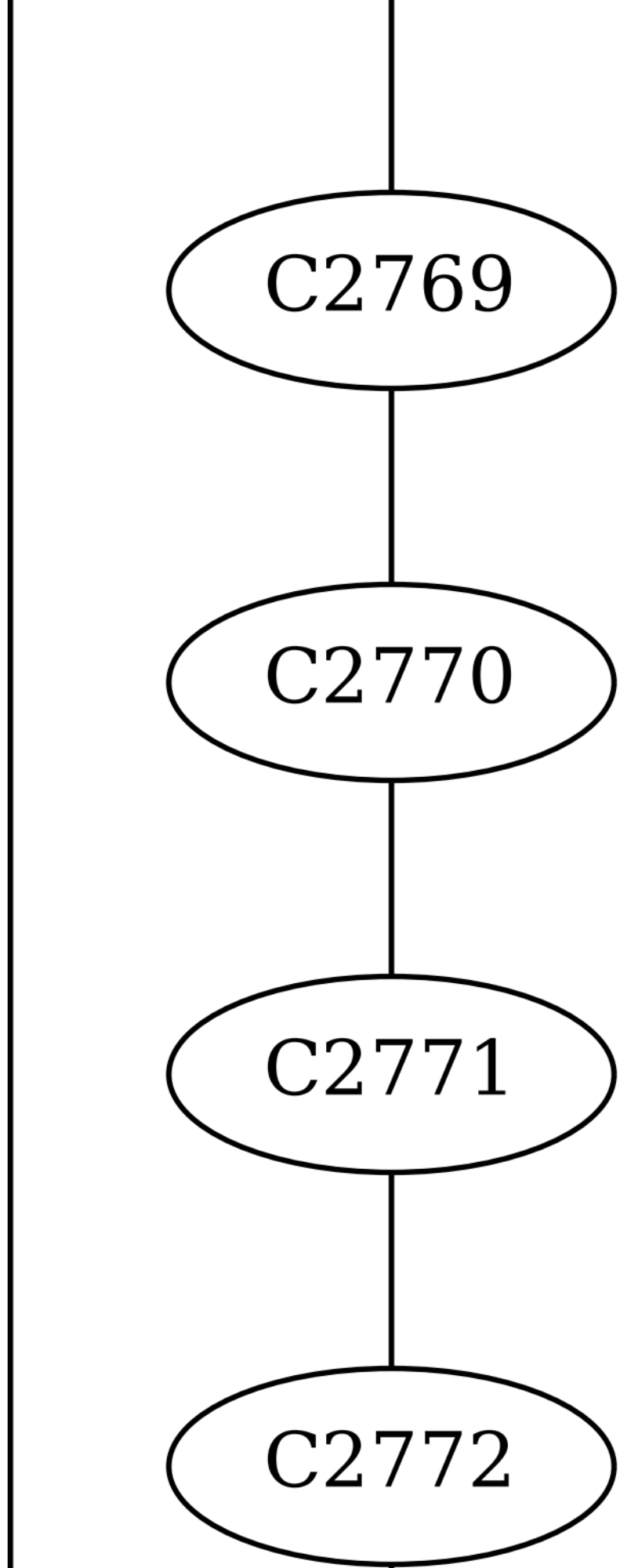
C2769
C2770
C2771
C2772

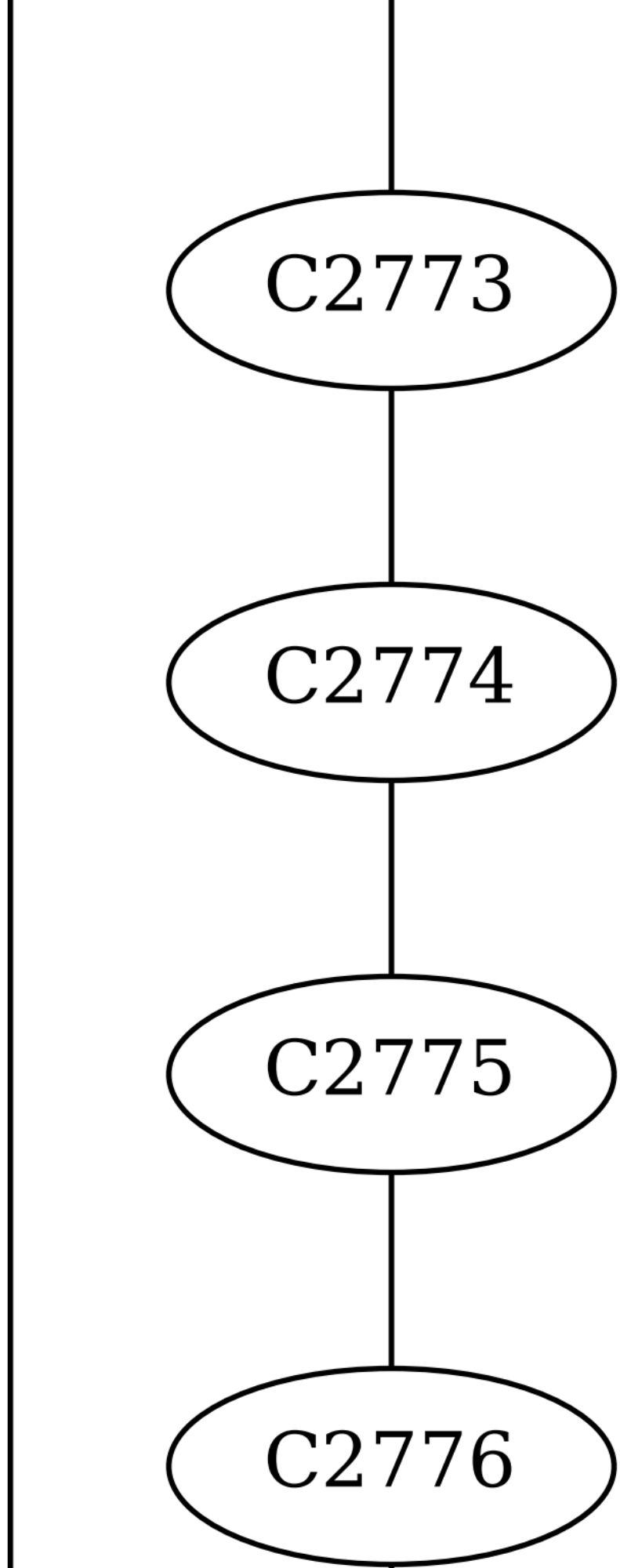
C2773
C2774
C2775
C2776

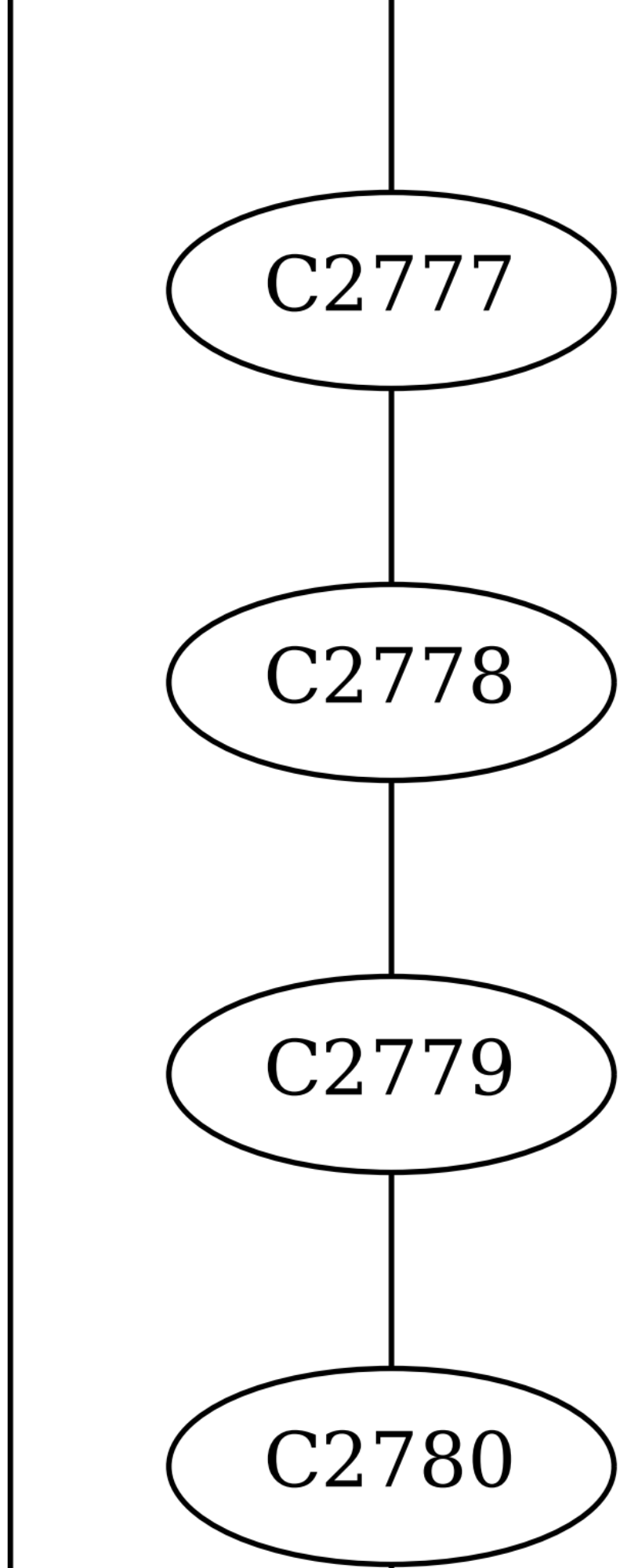
C2777
C2778
C2779
C2780

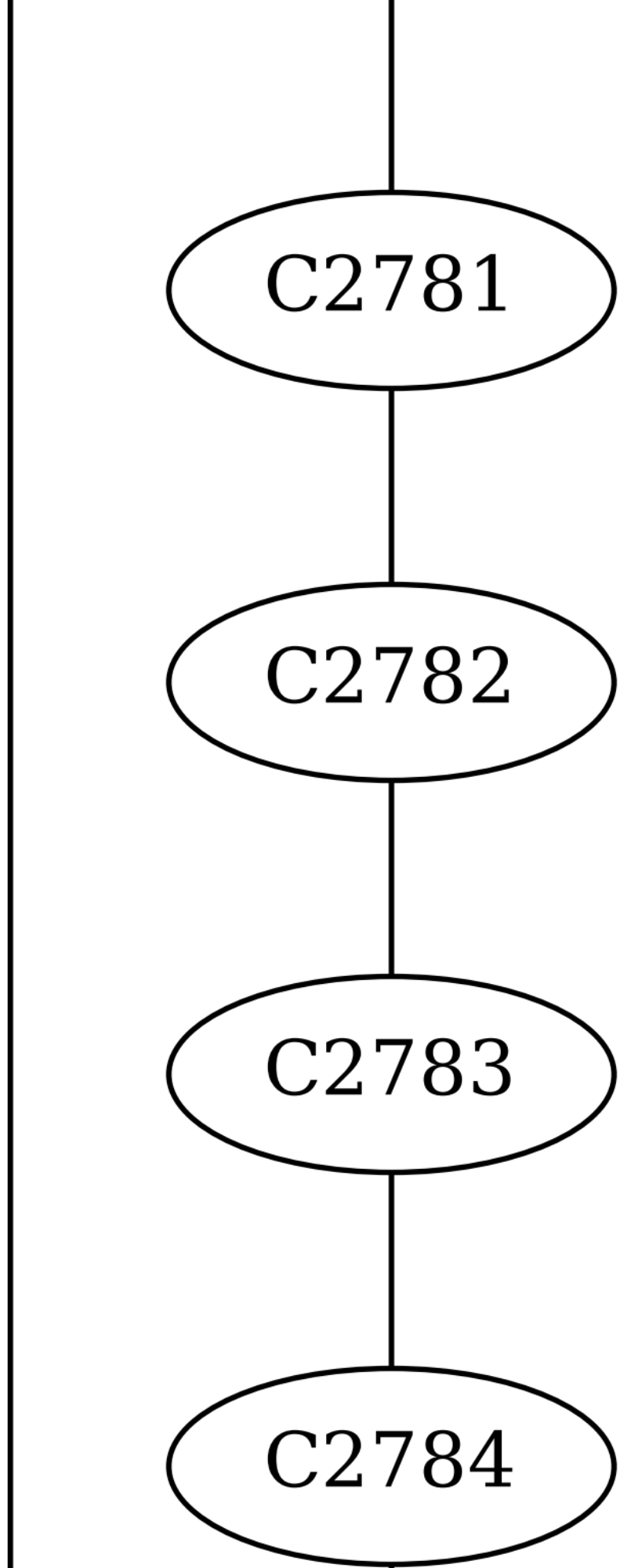
C2781
C2782
C2783
C2784

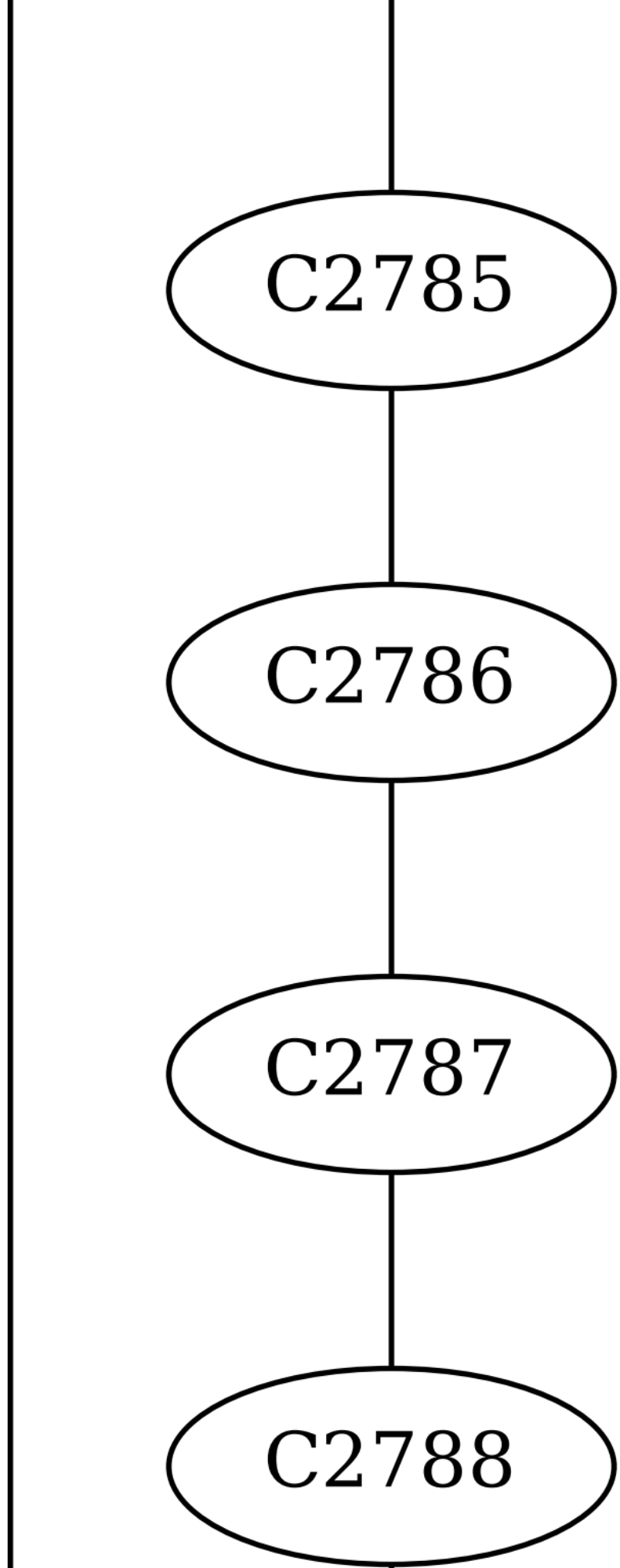
C2785
C2786
C2787
C2788

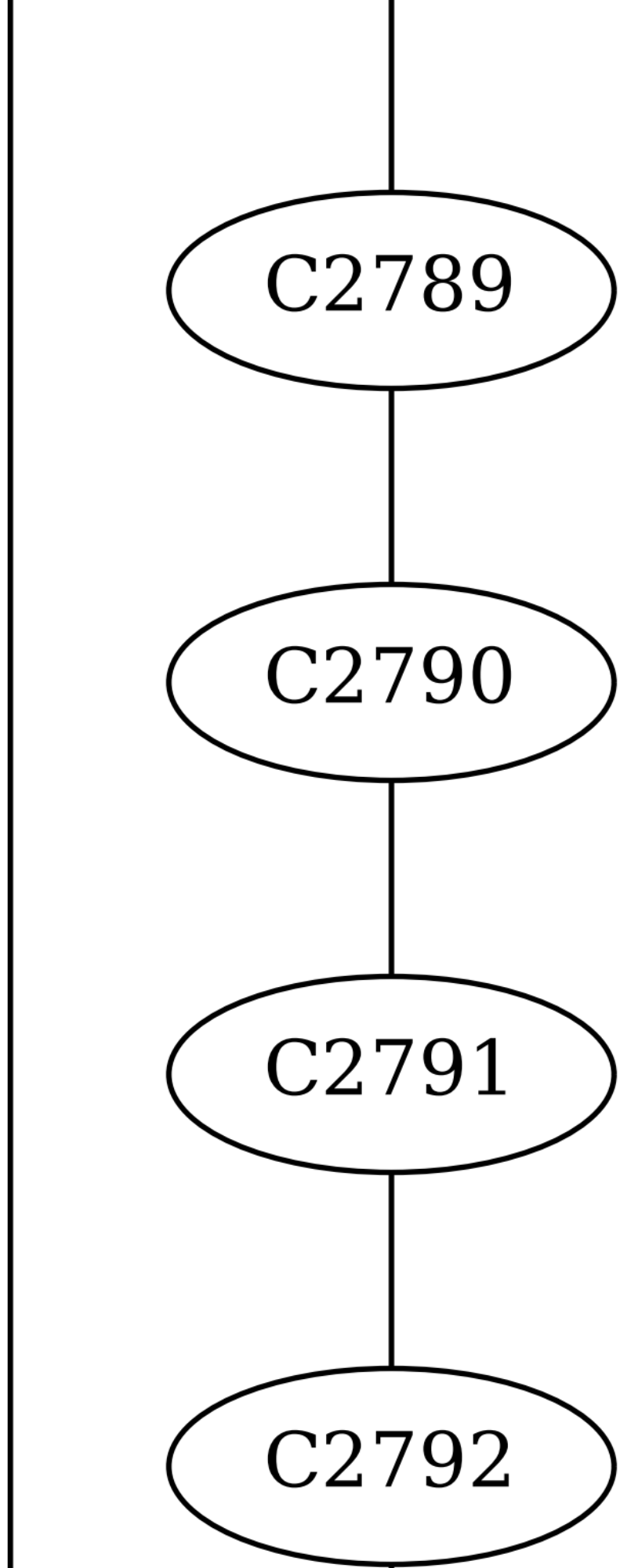
C2789
C2790
C2791
C2792

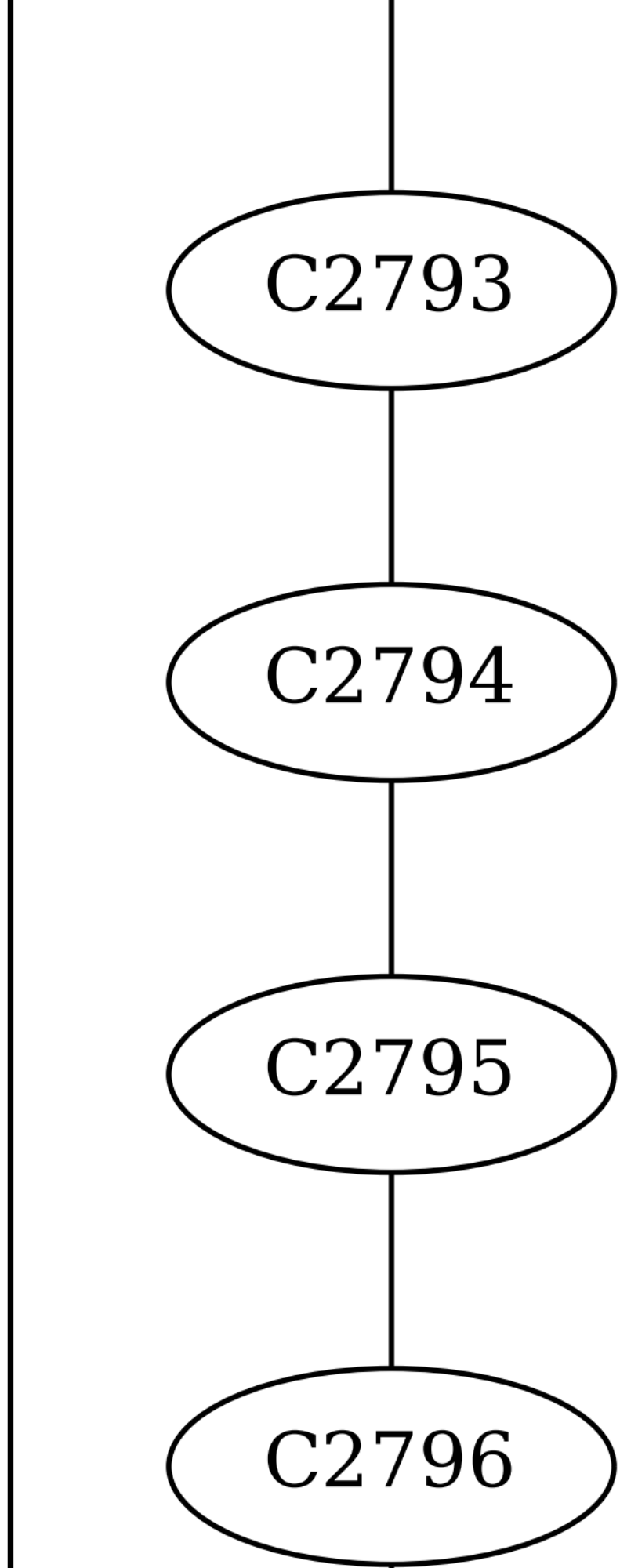
C2793
C2794
C2795
C2796

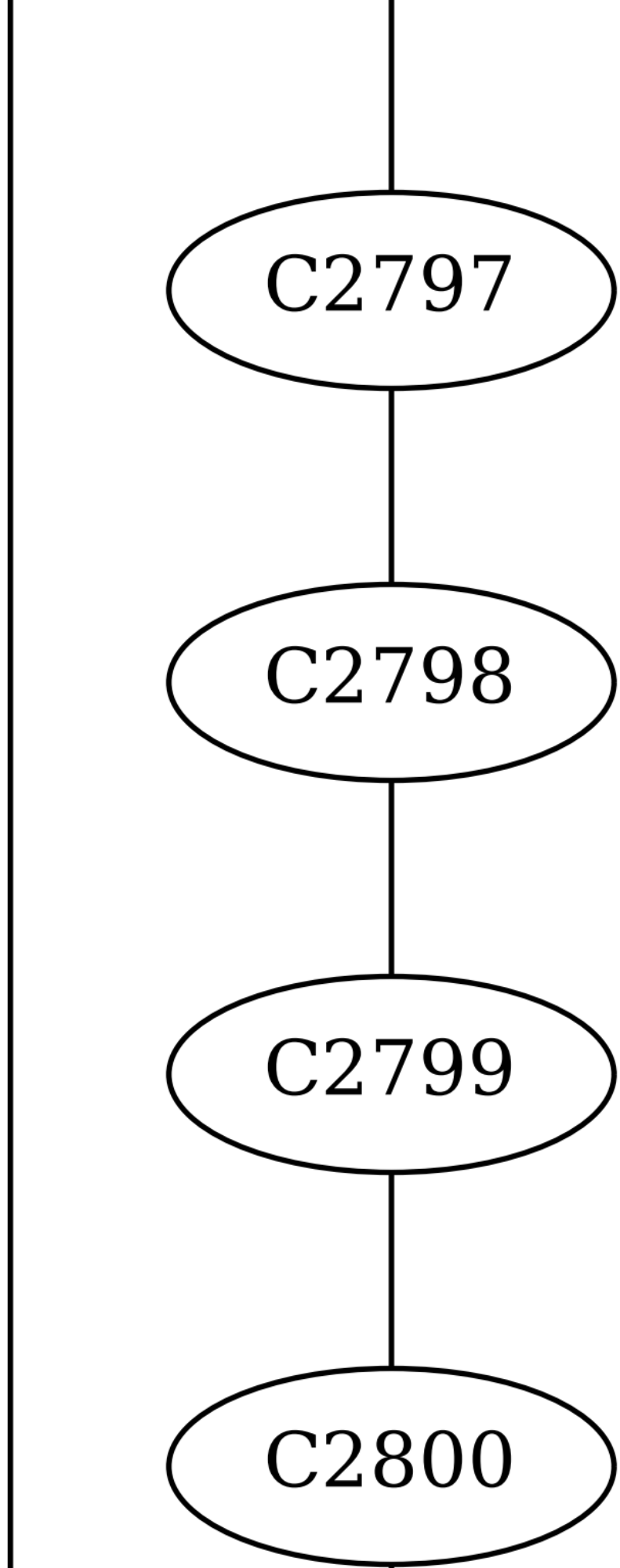
C2797
C2798
C2799
C2800

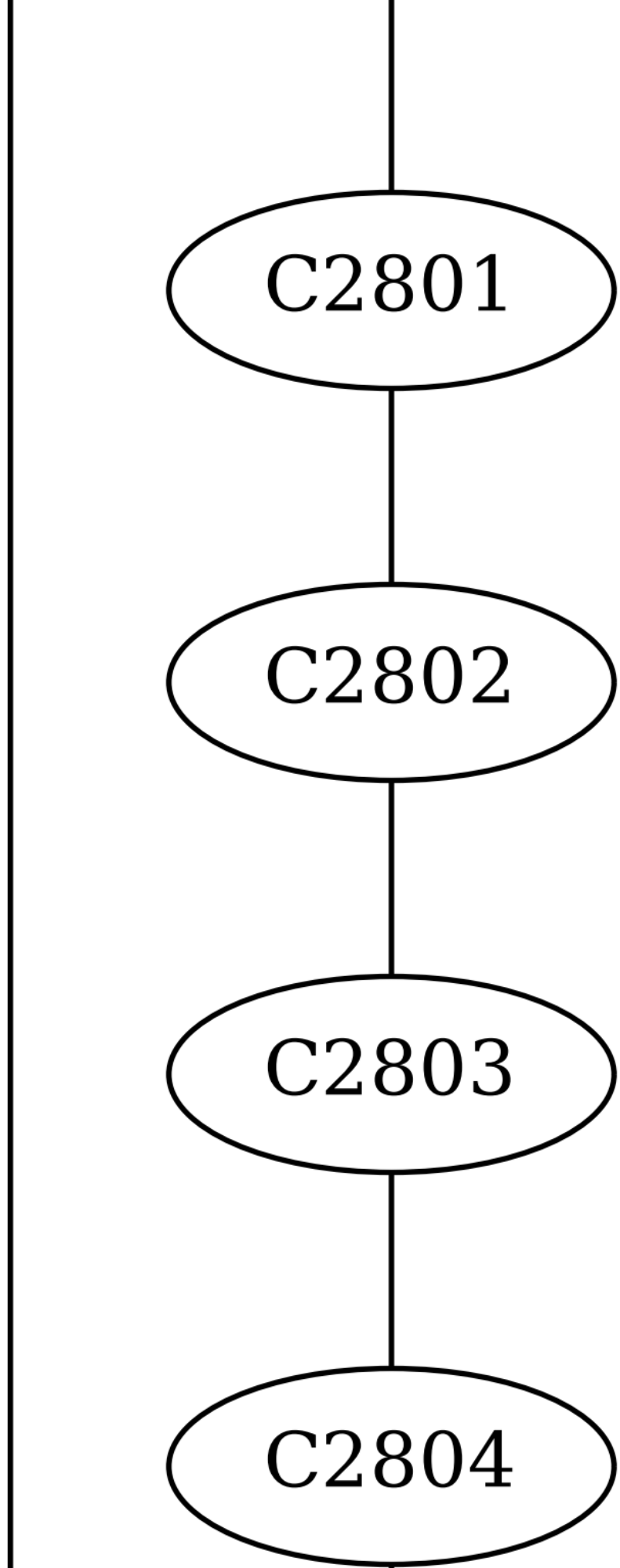
C2801
C2802
C2803
C2804

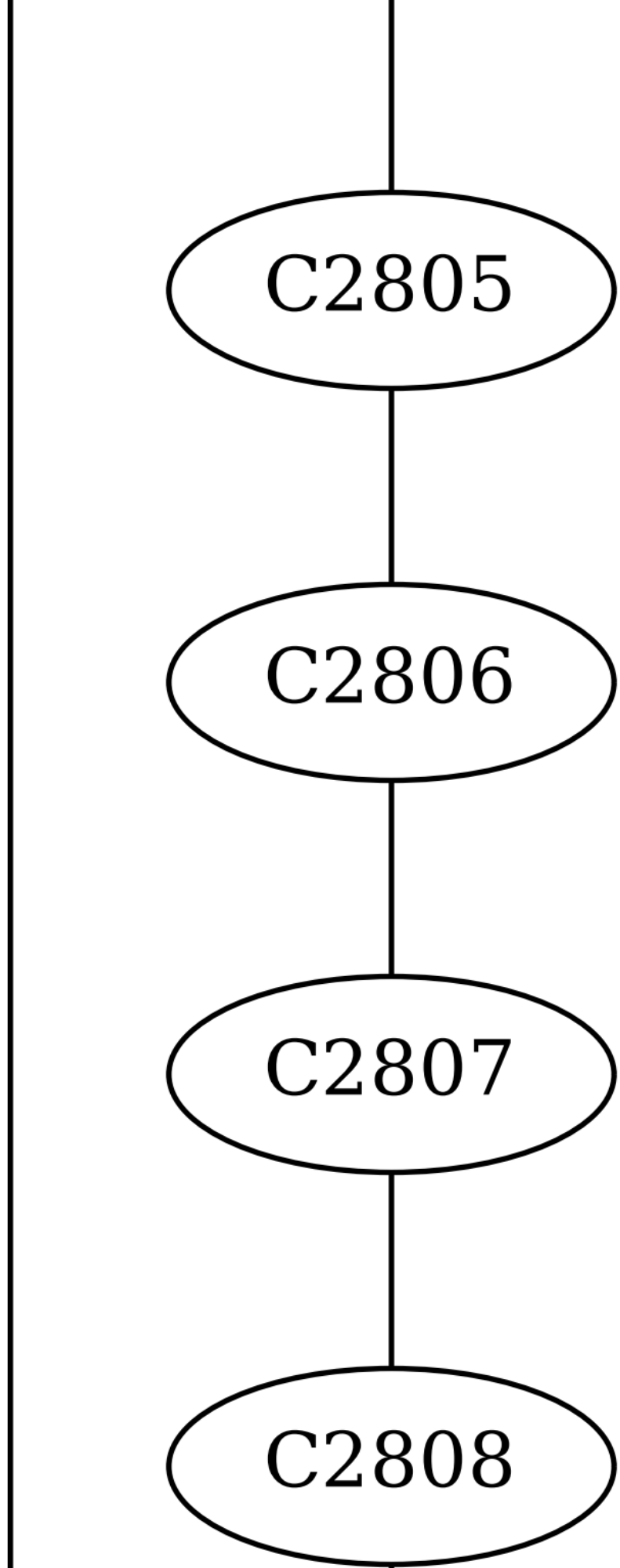
C2805
C2806
C2807
C2808

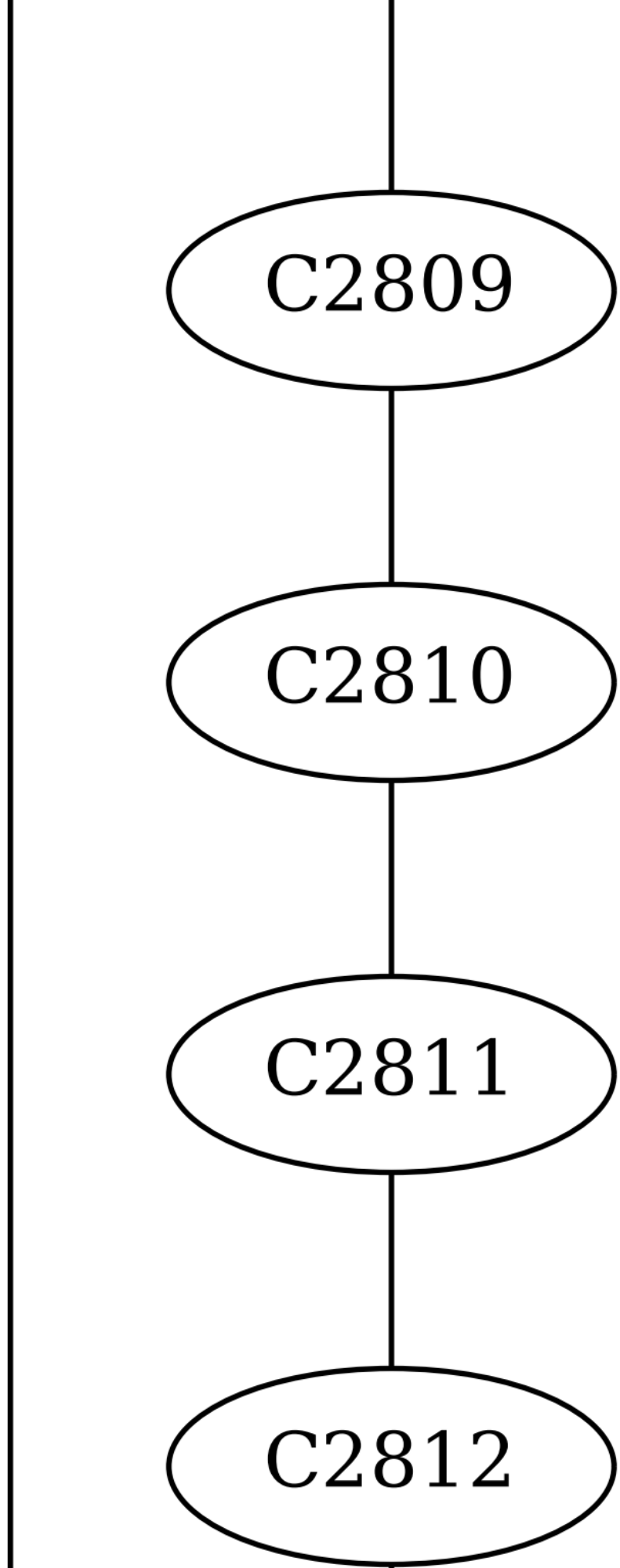
C2809
C2810
C2811
C2812

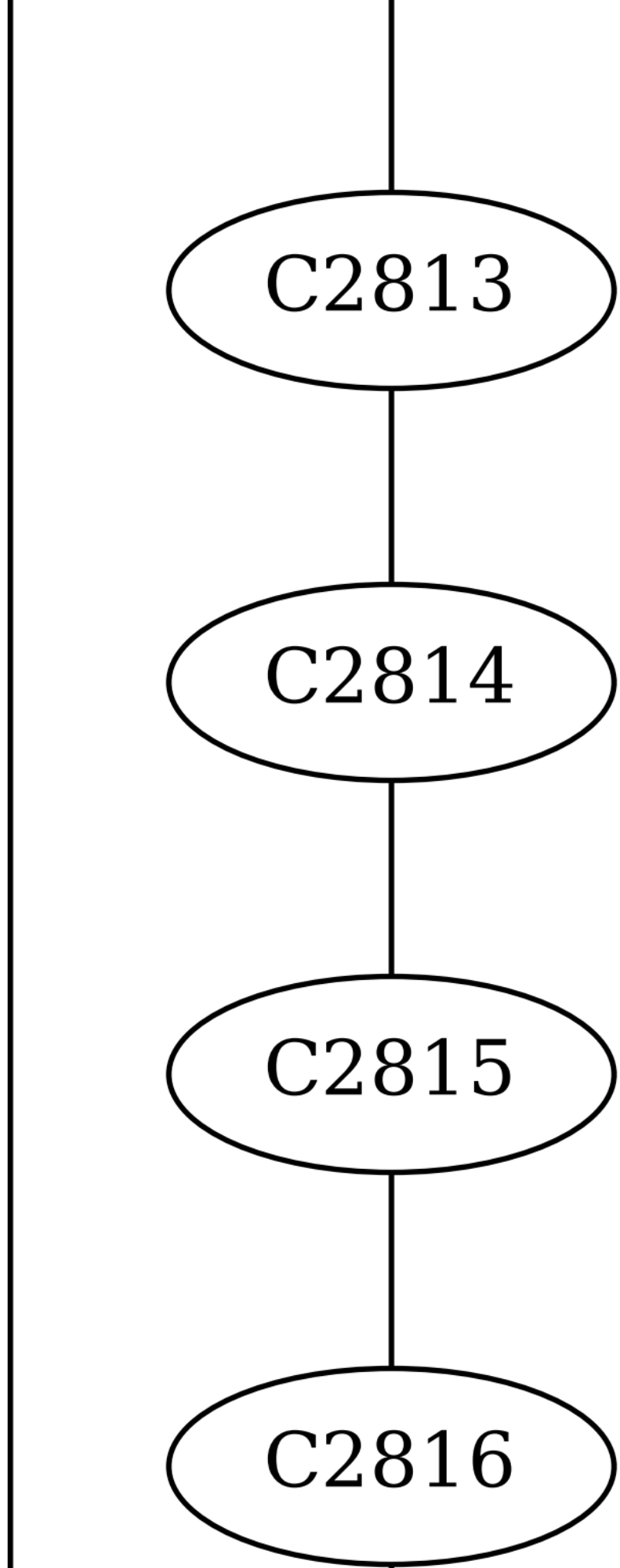
C2813
C2814
C2815
C2816

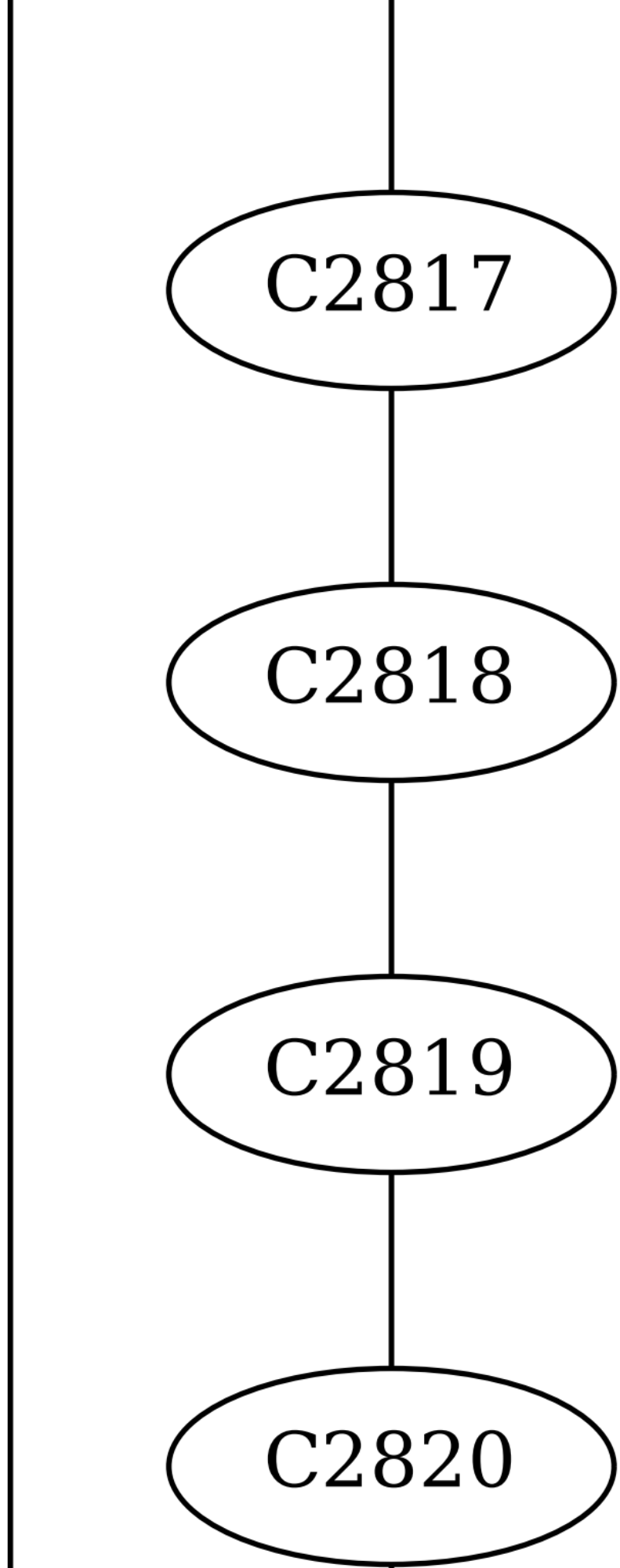
C2817
C2818
C2819
C2820

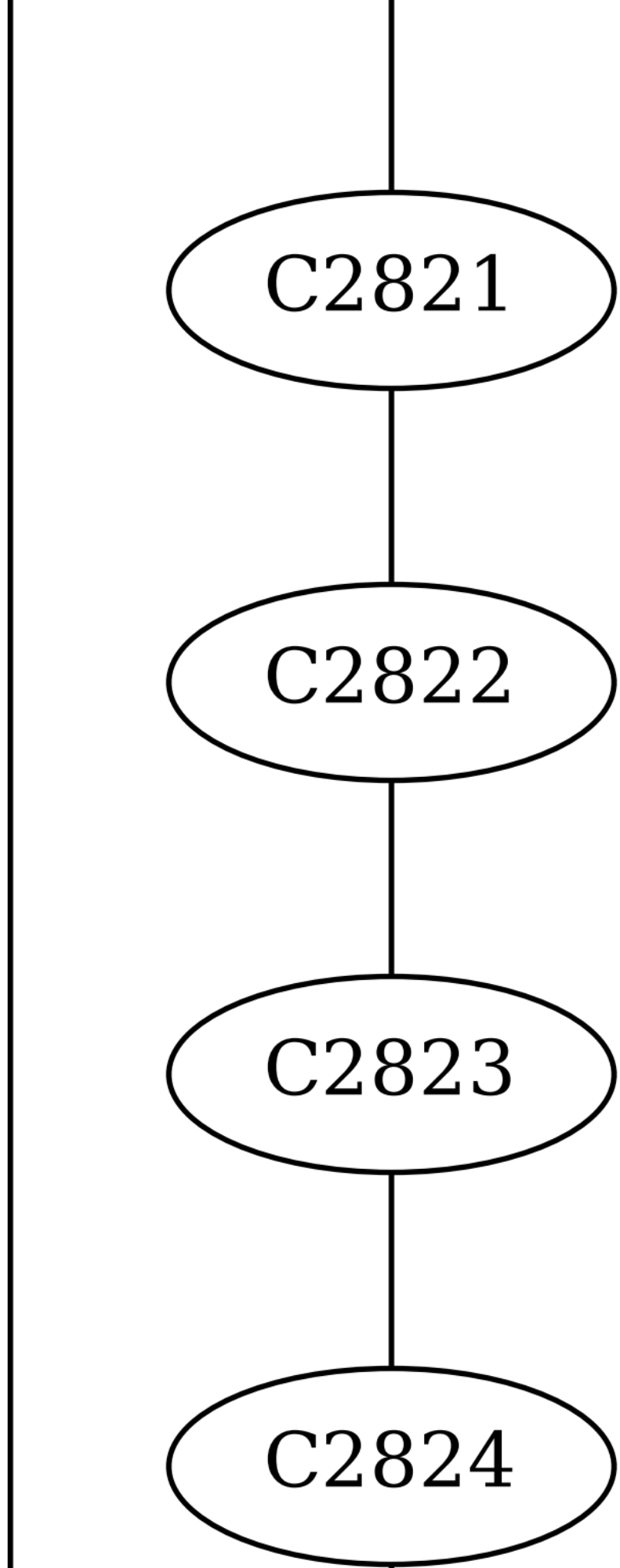
C2821
C2822
C2823
C2824

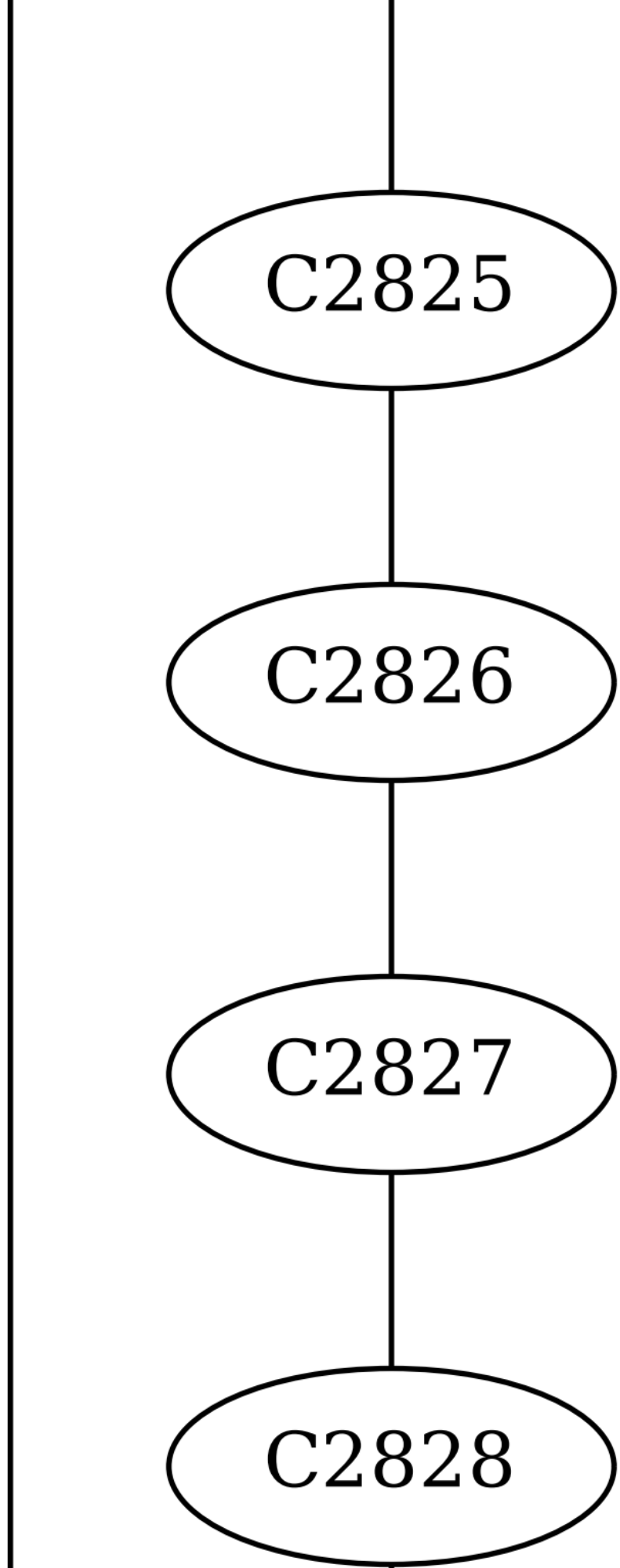
C2825
C2826
C2827
C2828

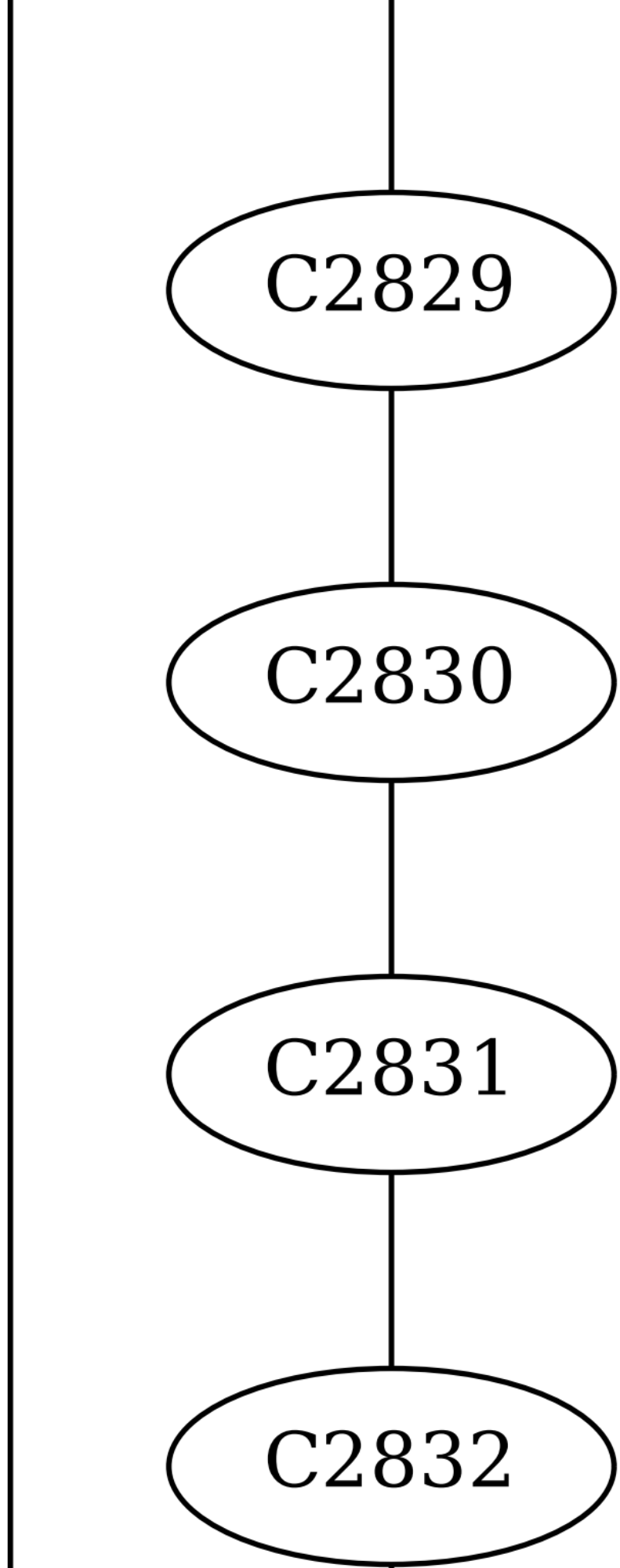
C2829
C2830
C2831
C2832

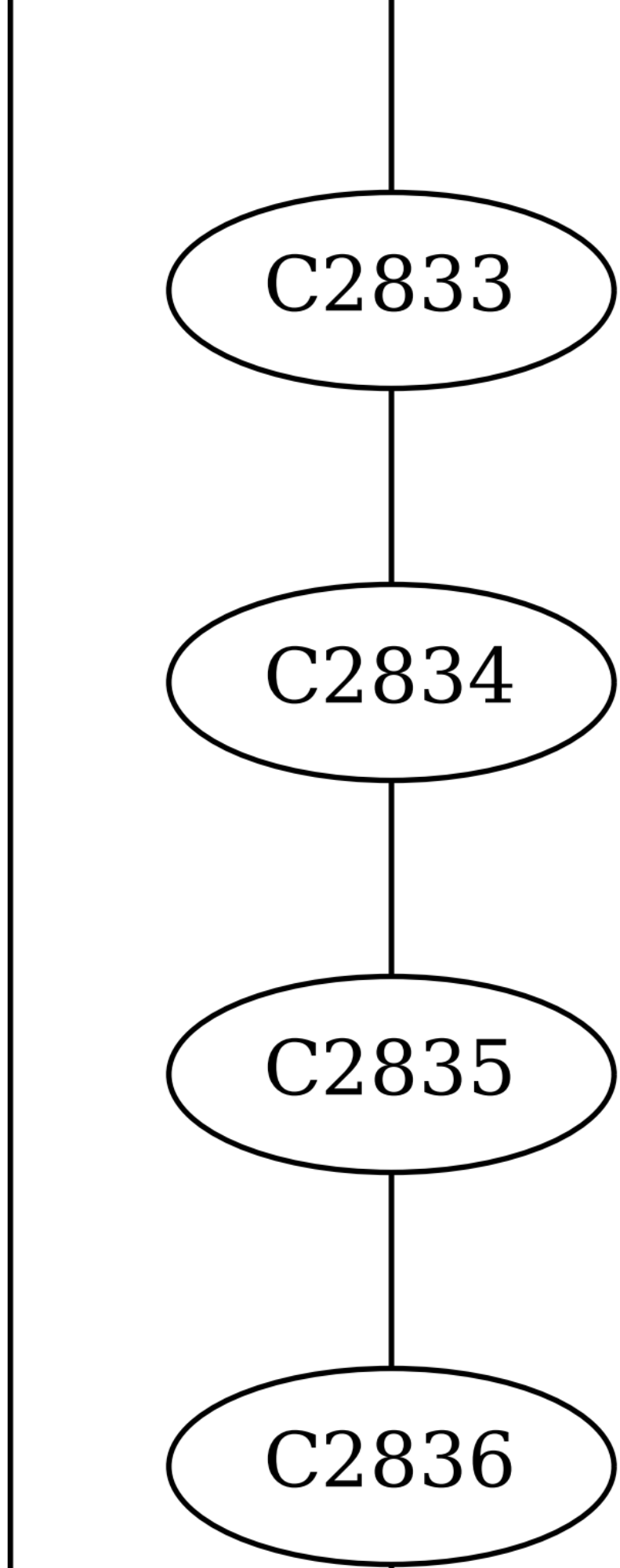
C2833
C2834
C2835
C2836

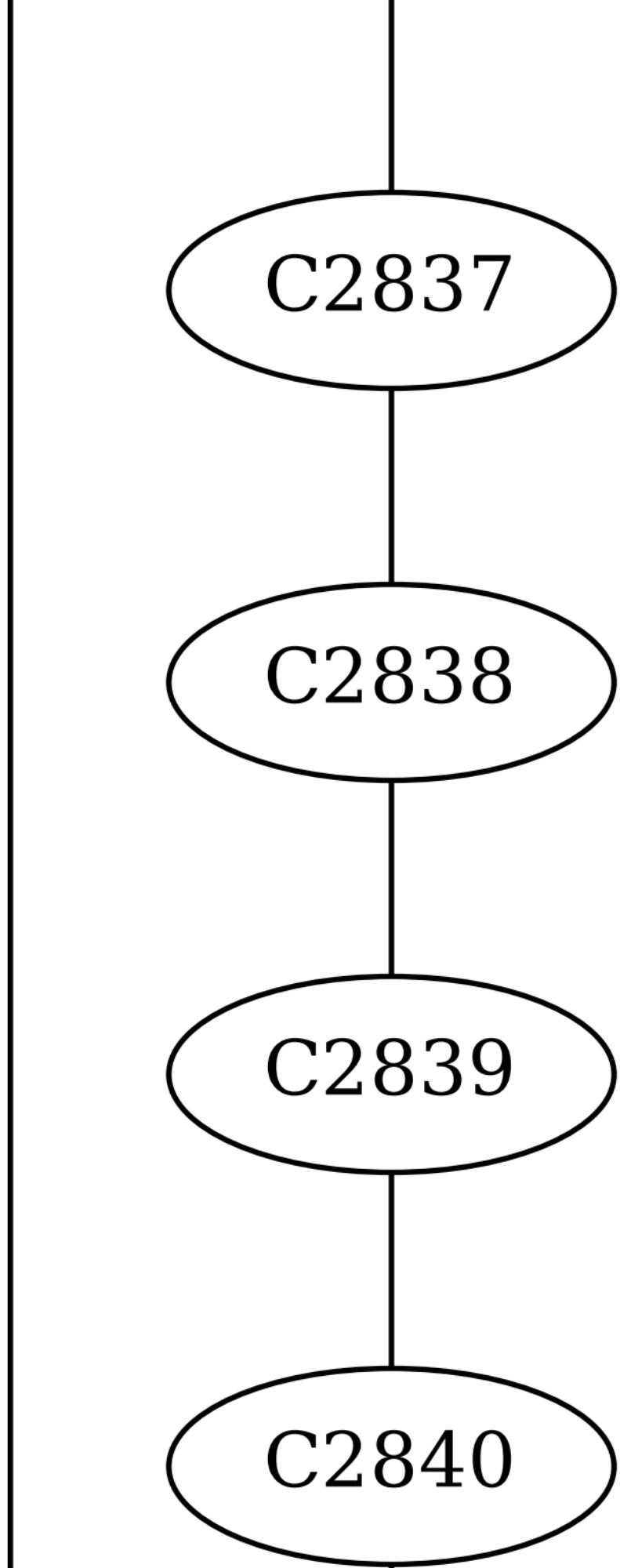
C2837
C2838
C2839
C2840

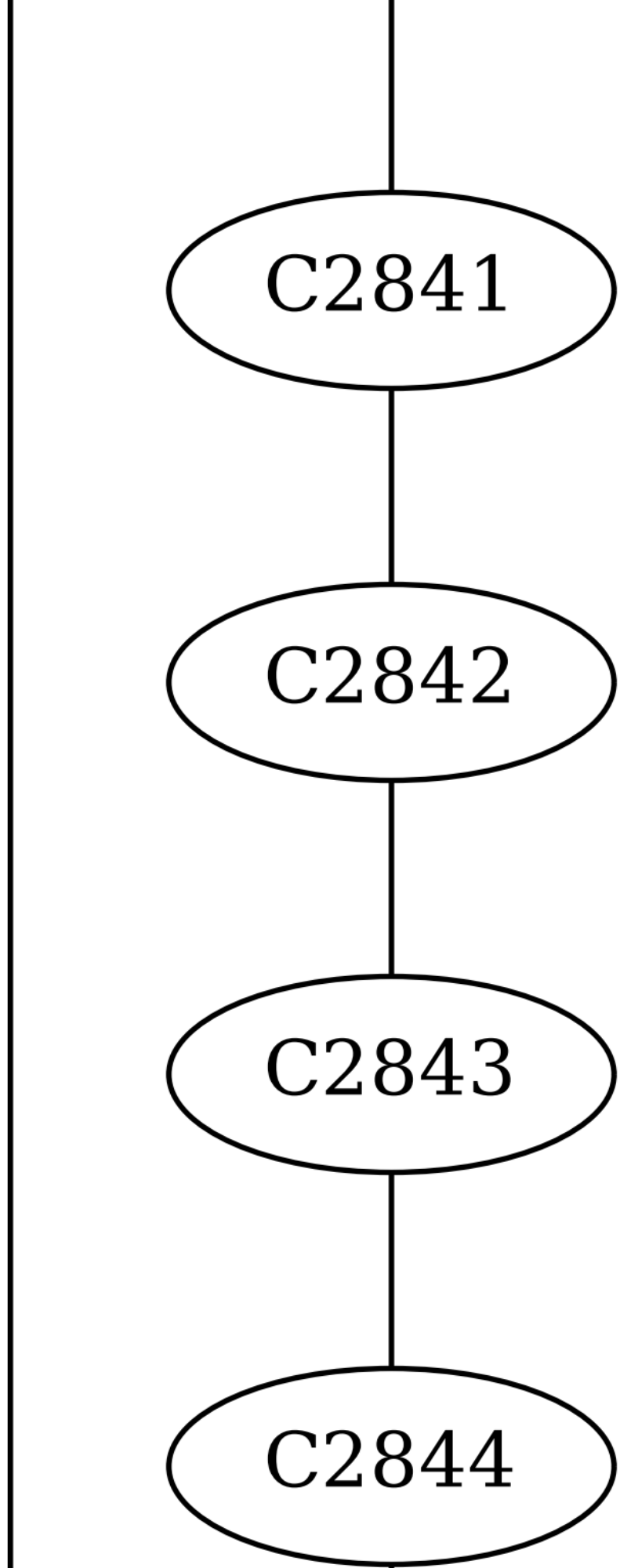
C2841
C2842
C2843
C2844

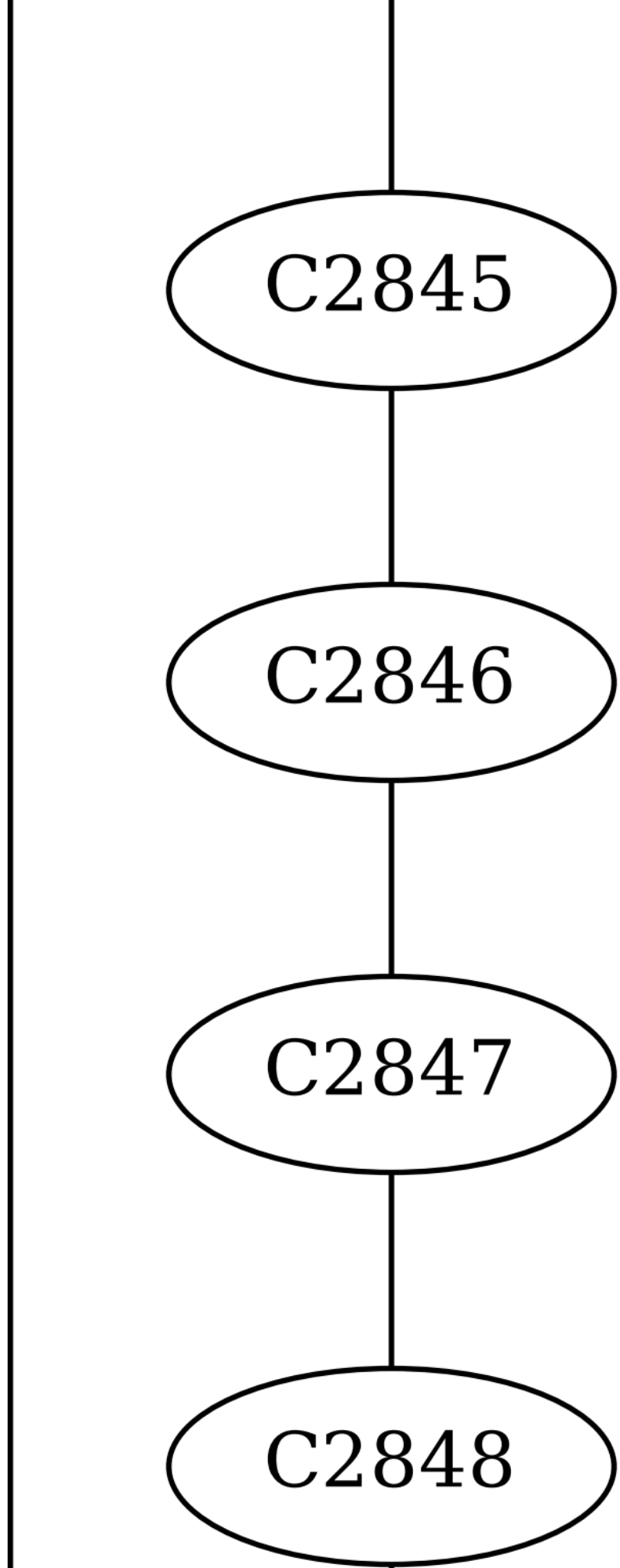
C2845
C2846
C2847
C2848

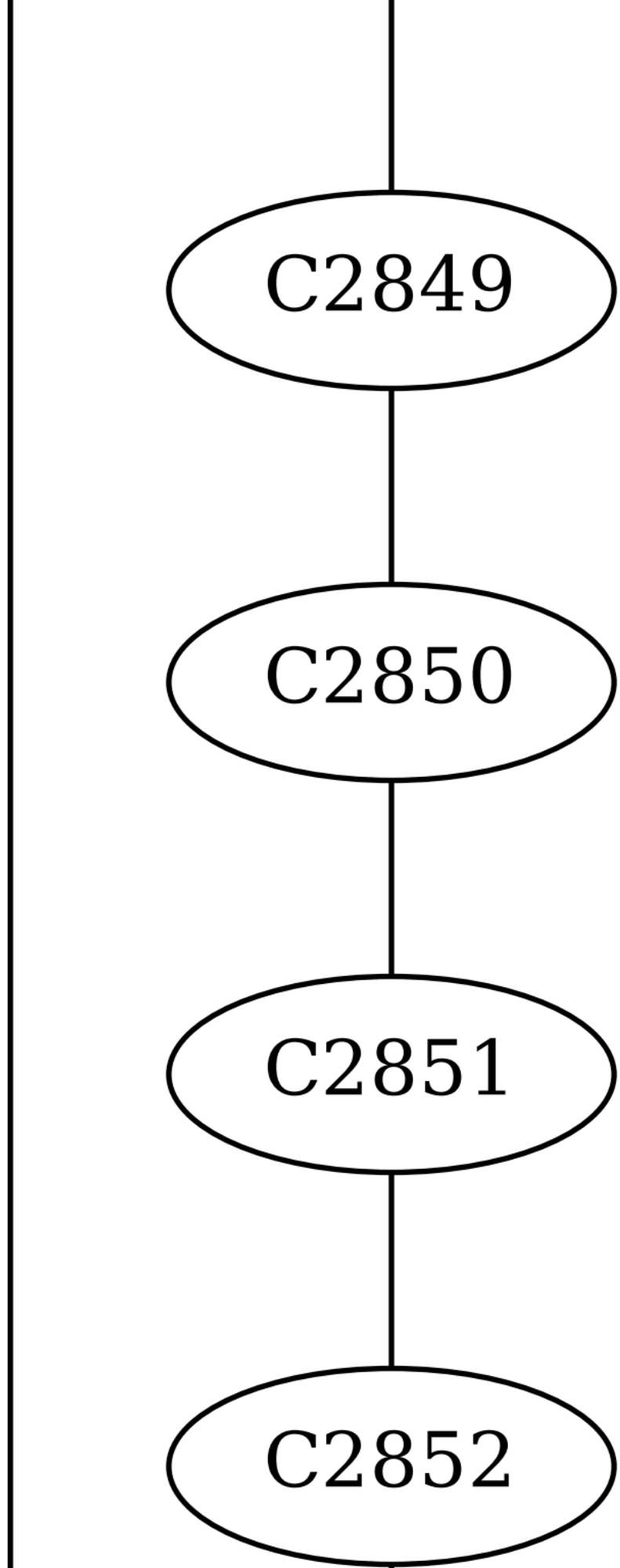
C2849
C2850
C2851
C2852

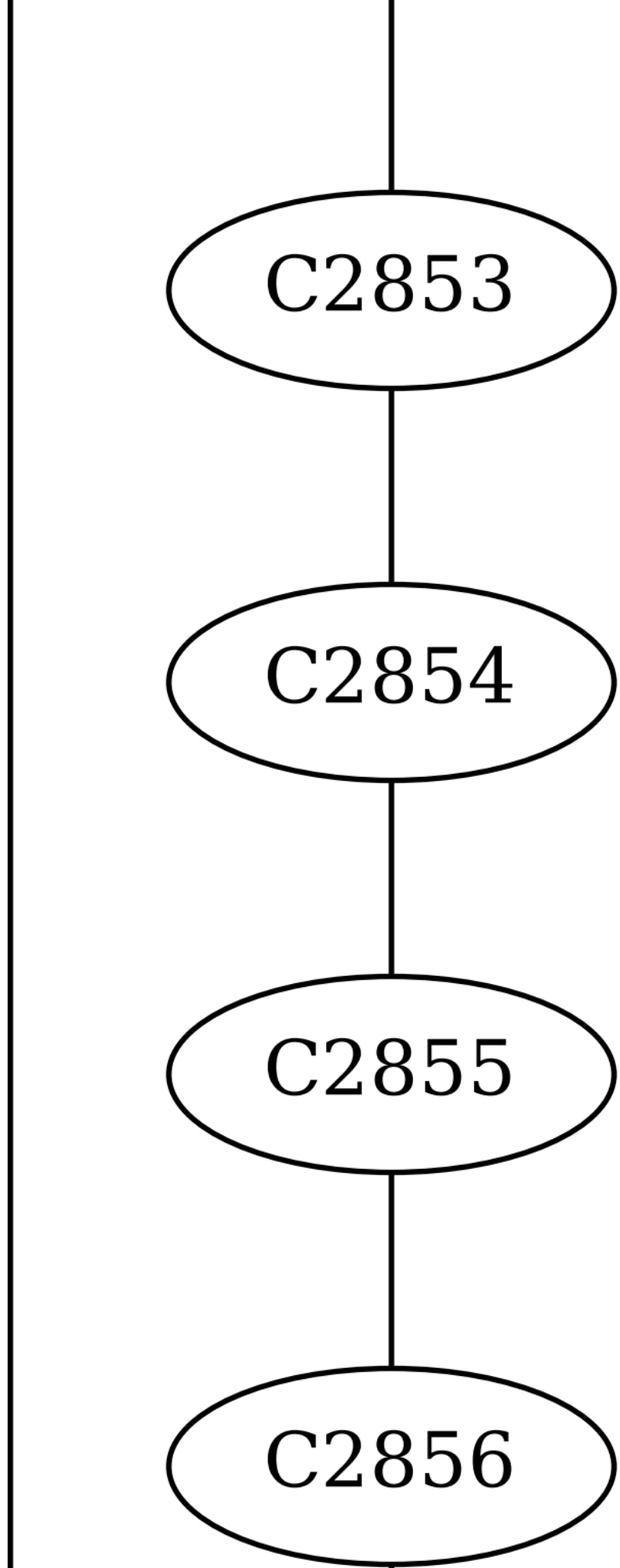
C2853
C2854
C2855
C2856

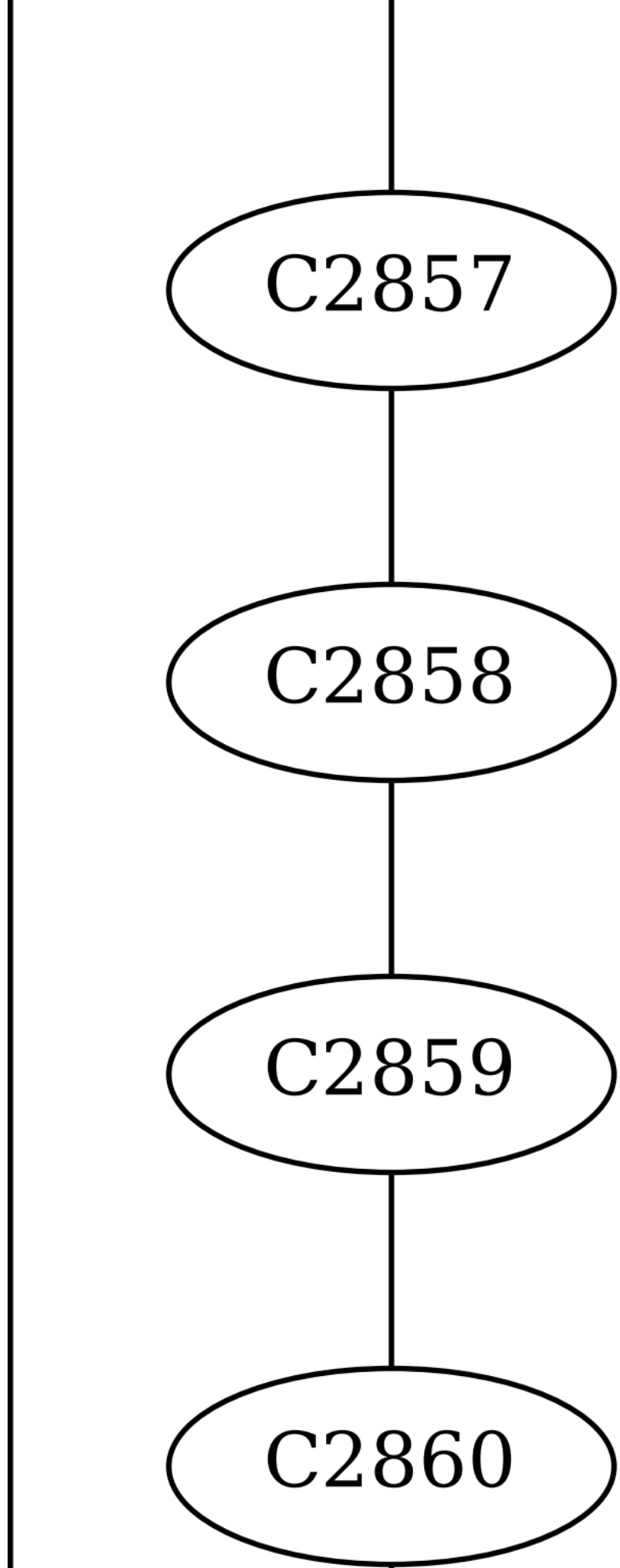
C2857
C2858
C2859
C2860

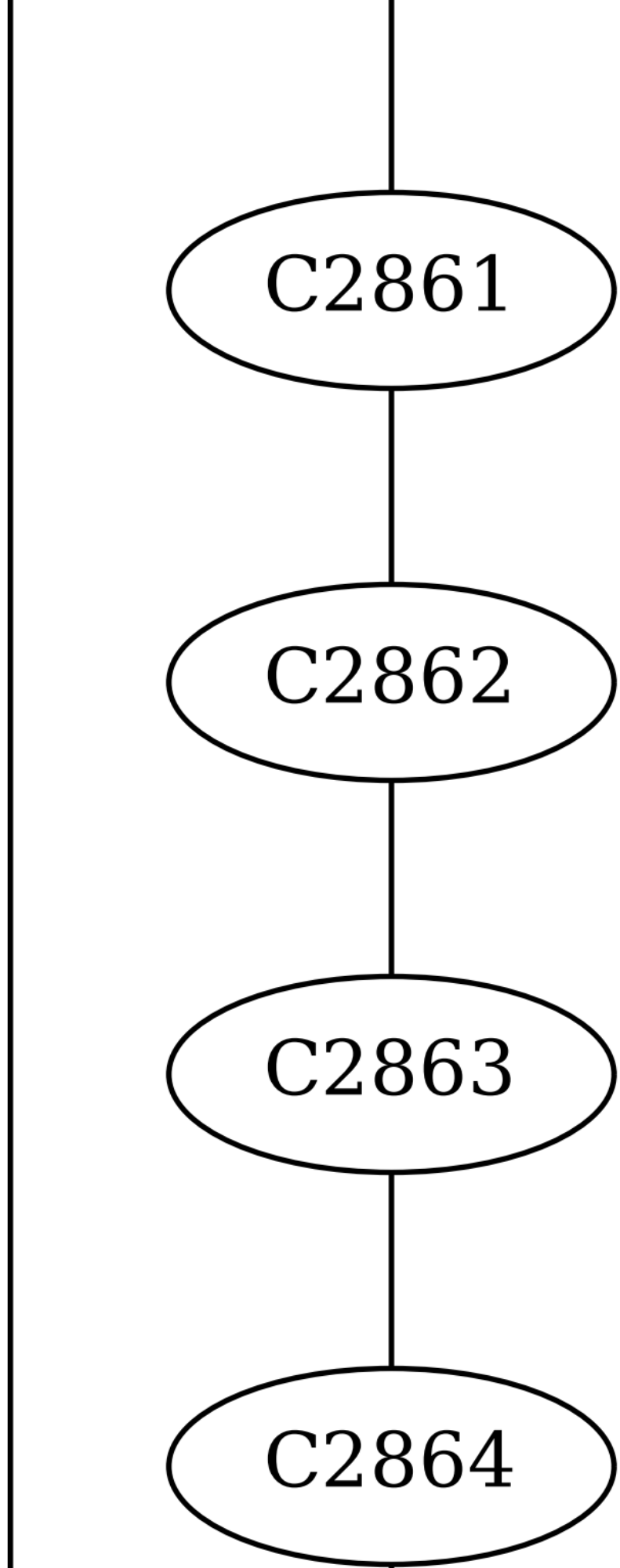
C2861
C2862
C2863
C2864

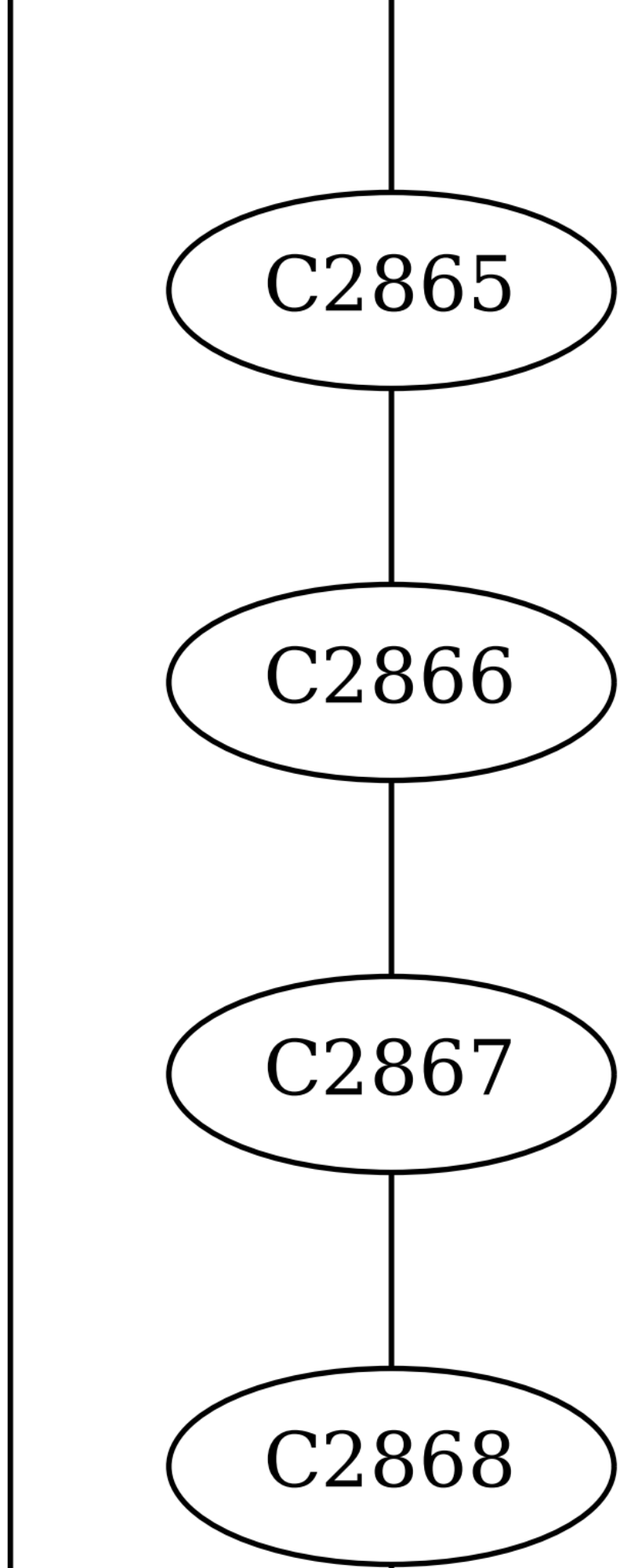
C2865
C2866
C2867
C2868

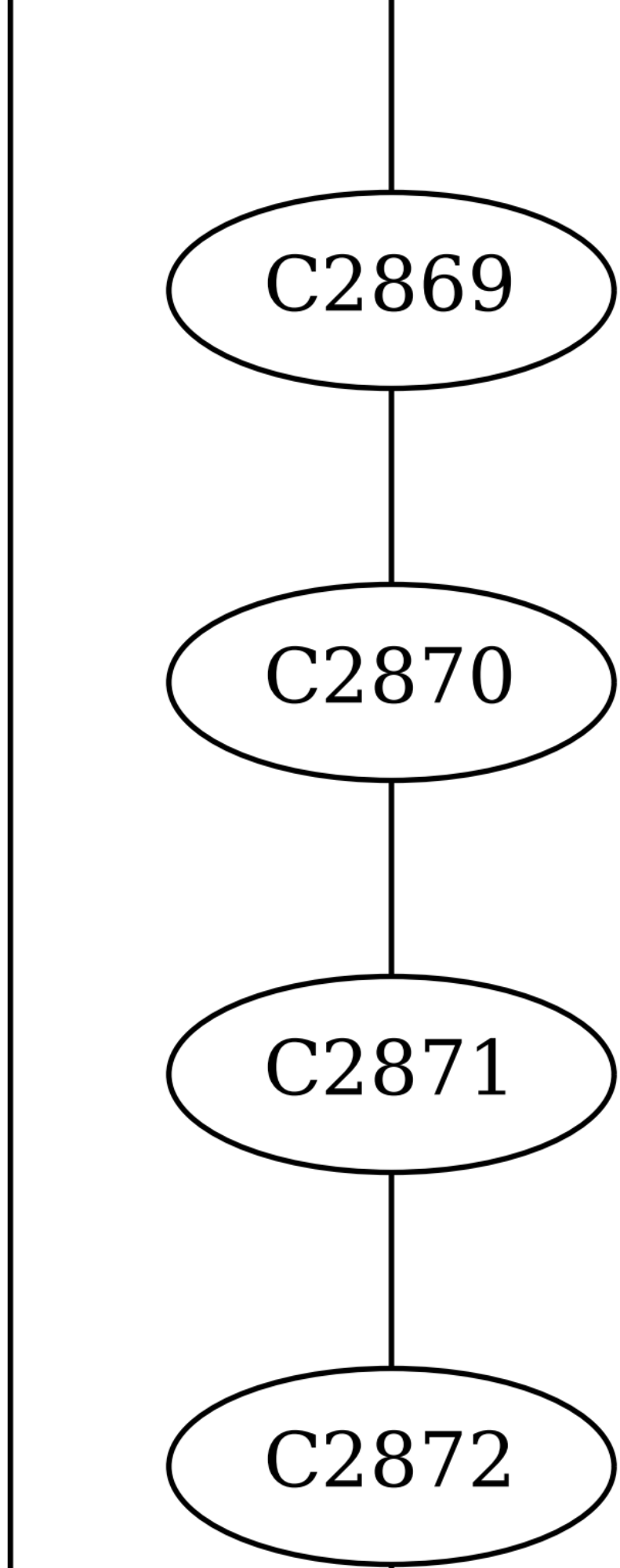
C2869
C2870
C2871
C2872

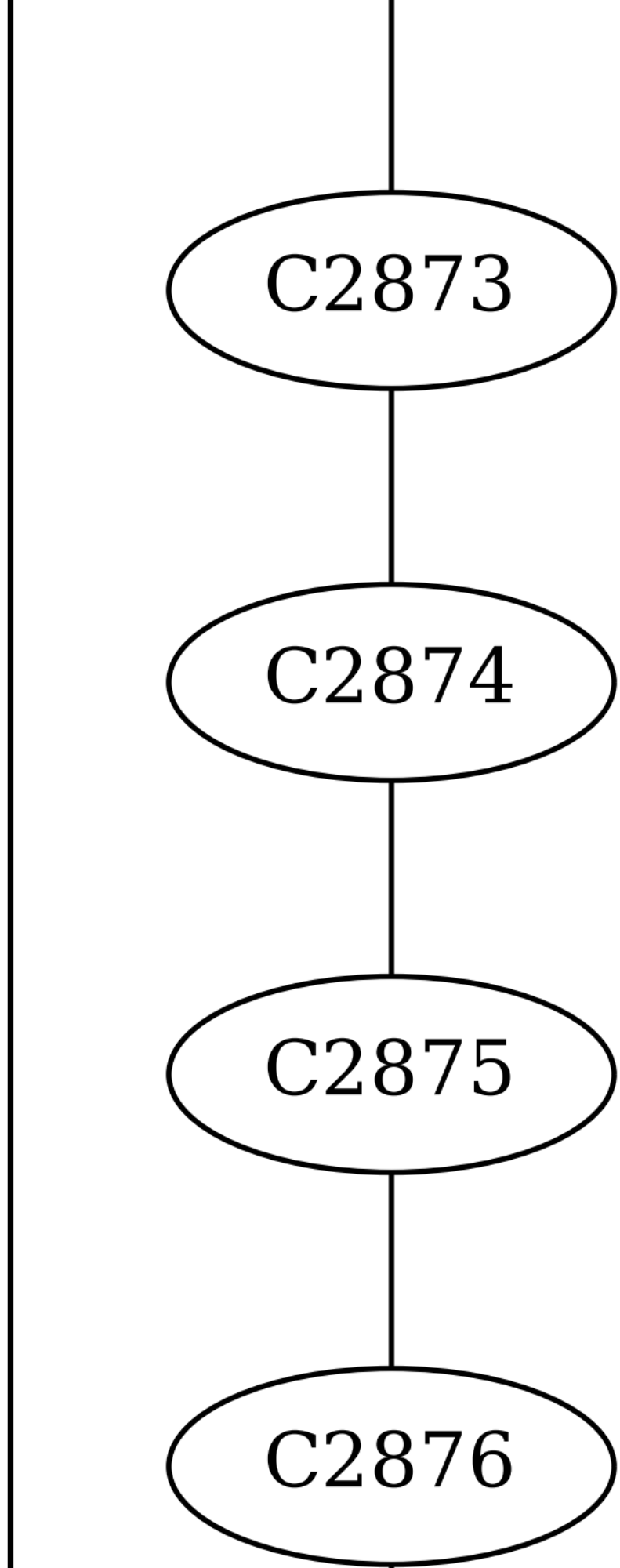
C2873
C2874
C2875
C2876

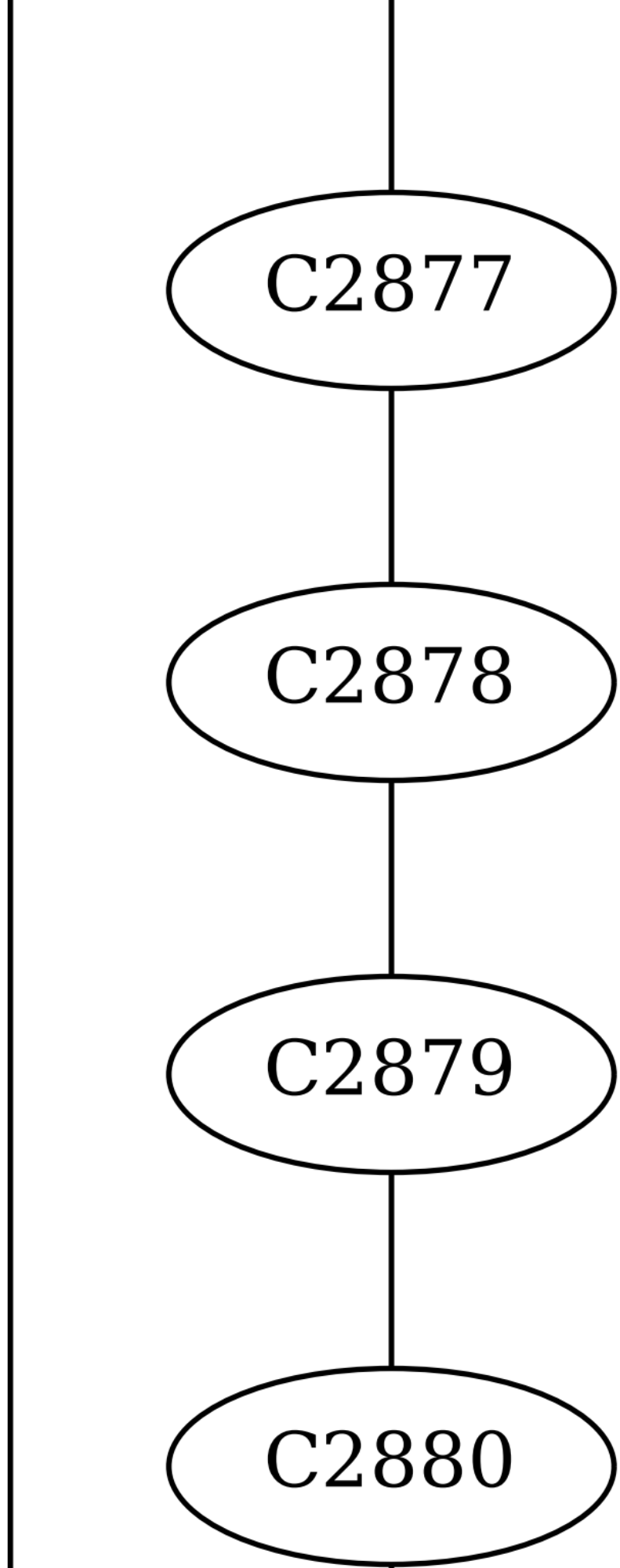
C2877
C2878
C2879
C2880

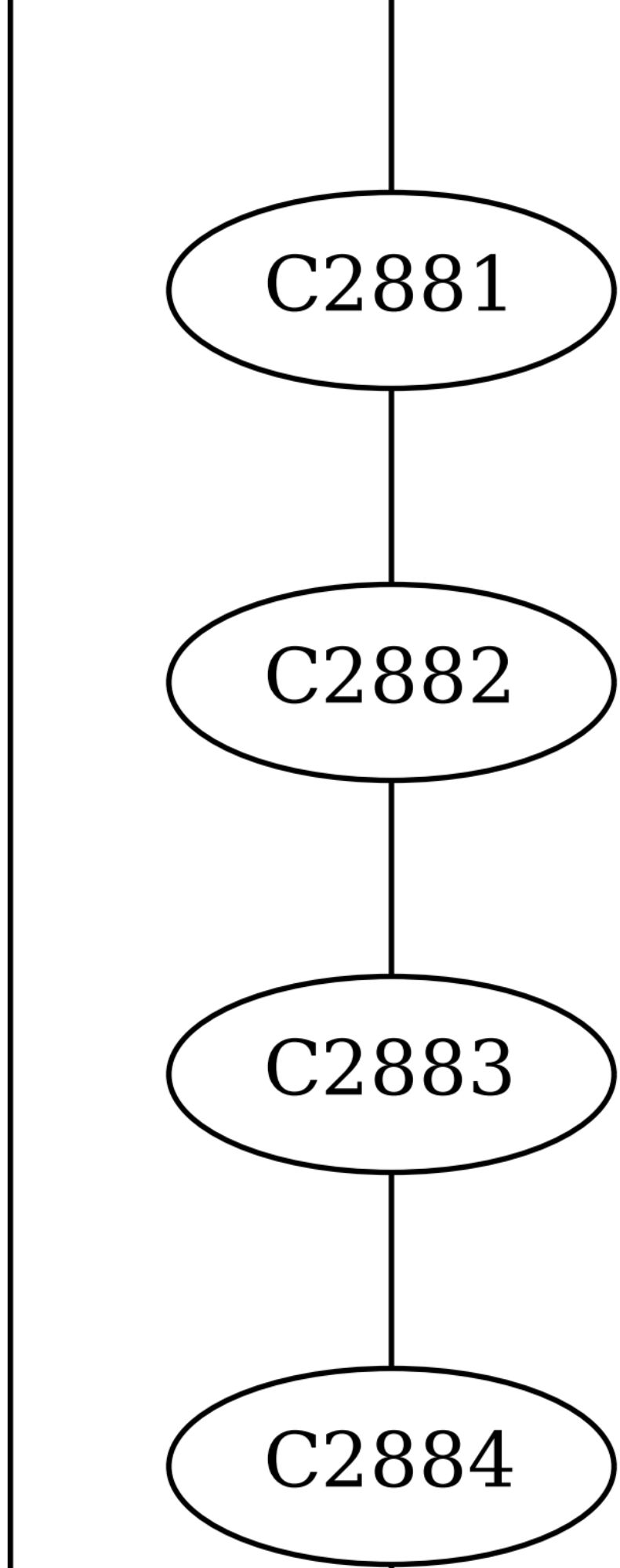
C2881
C2882
C2883
C2884

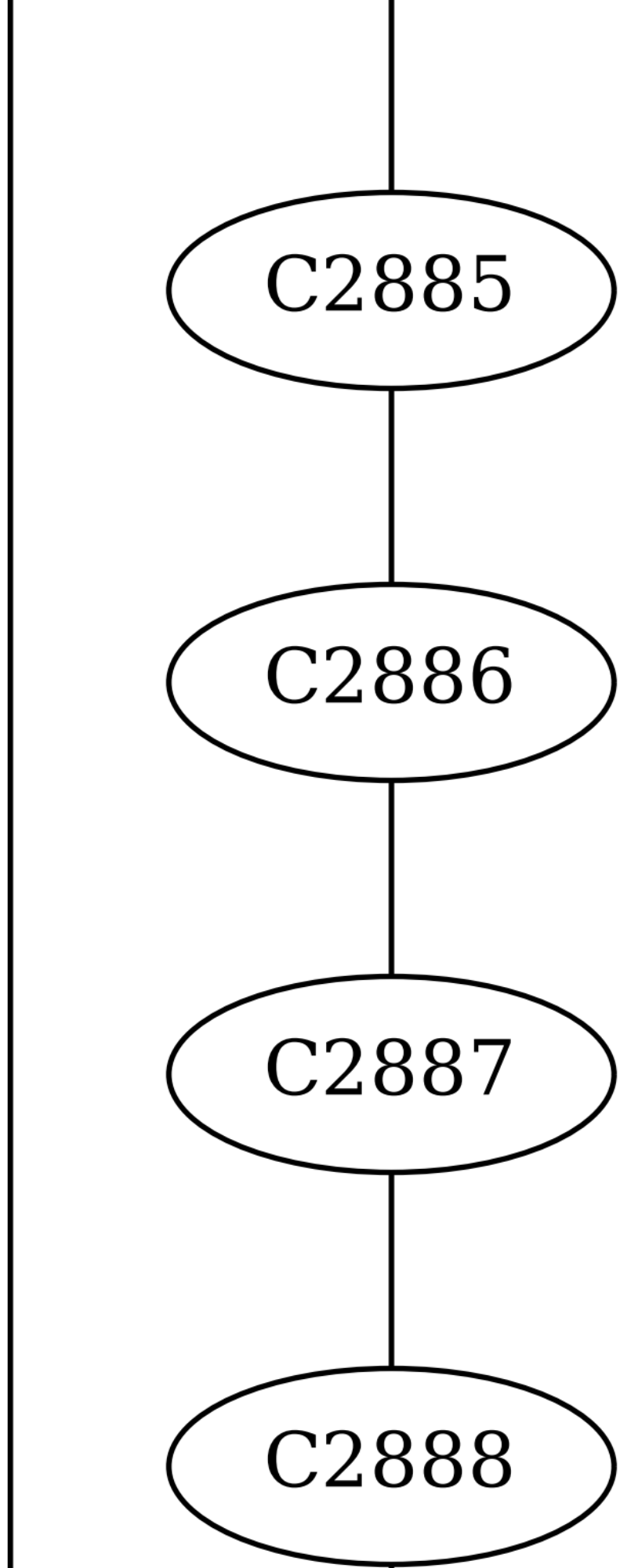
C2885
C2886
C2887
C2888

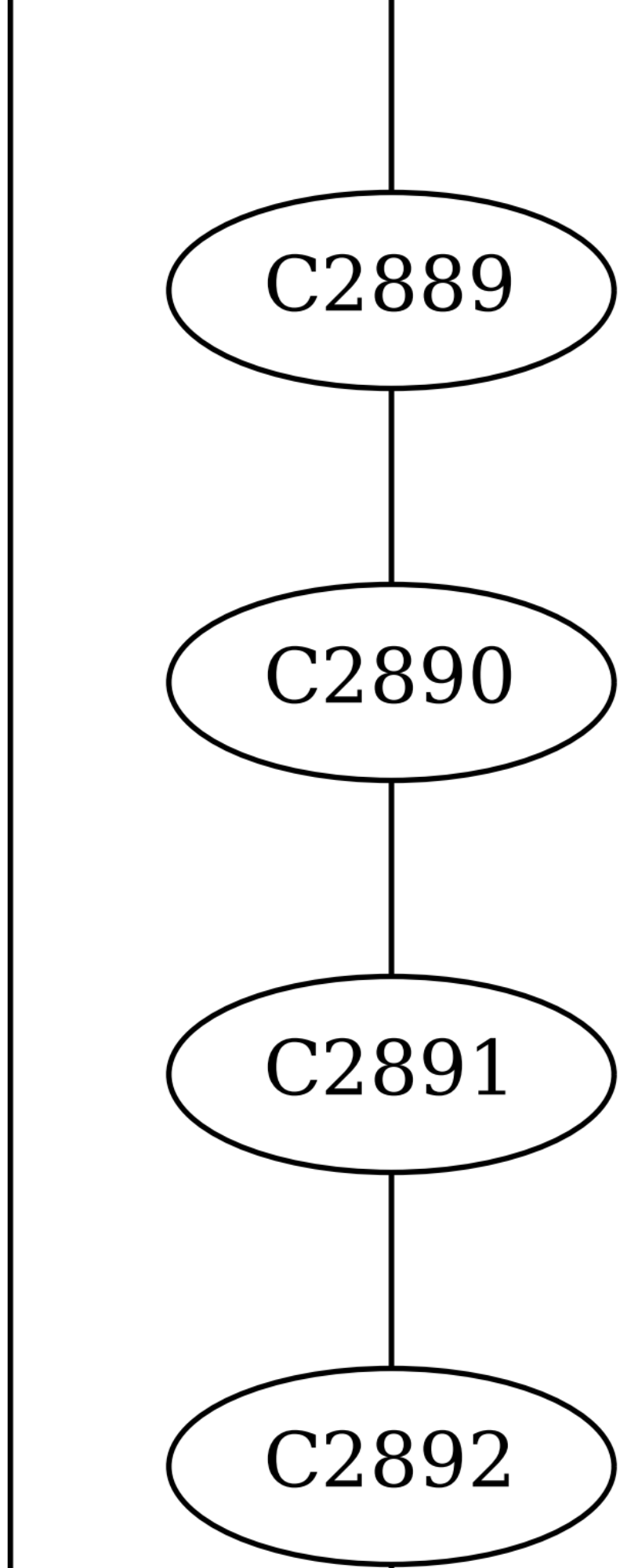
C2889
C2890
C2891
C2892

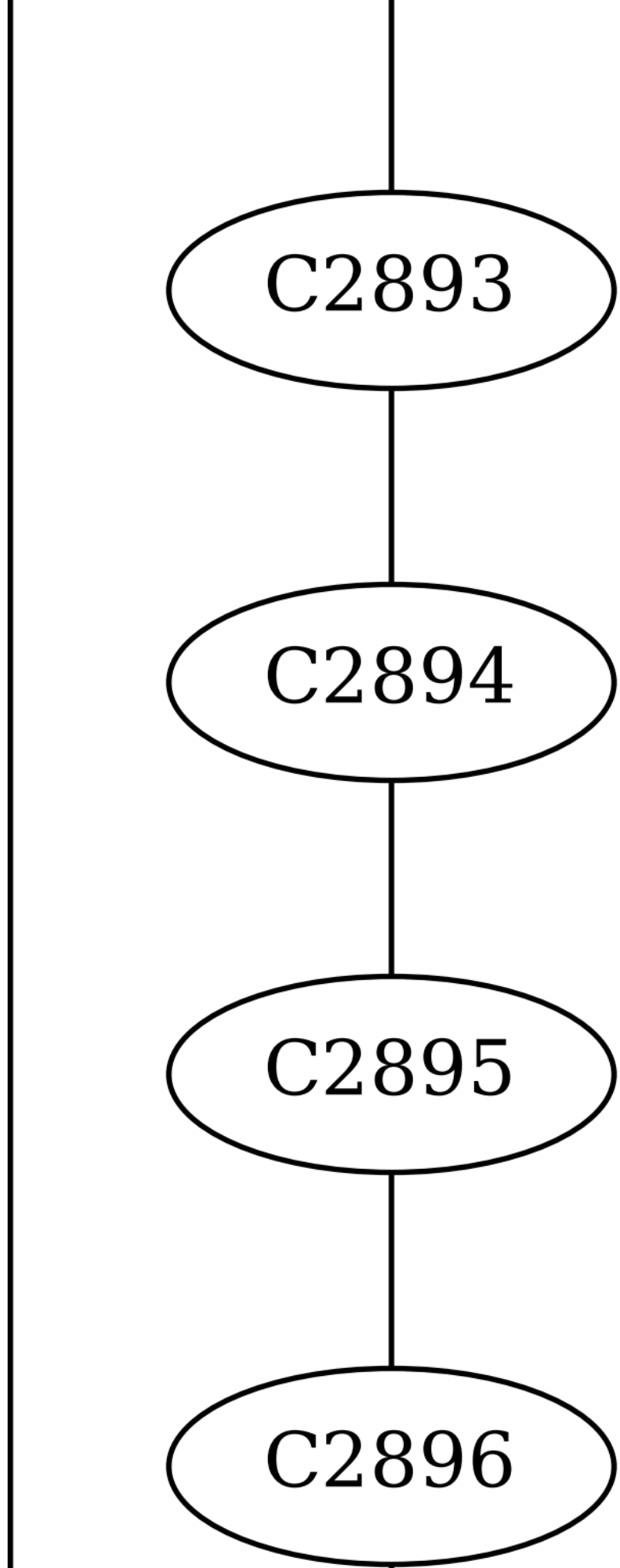
C2893
C2894
C2895
C2896

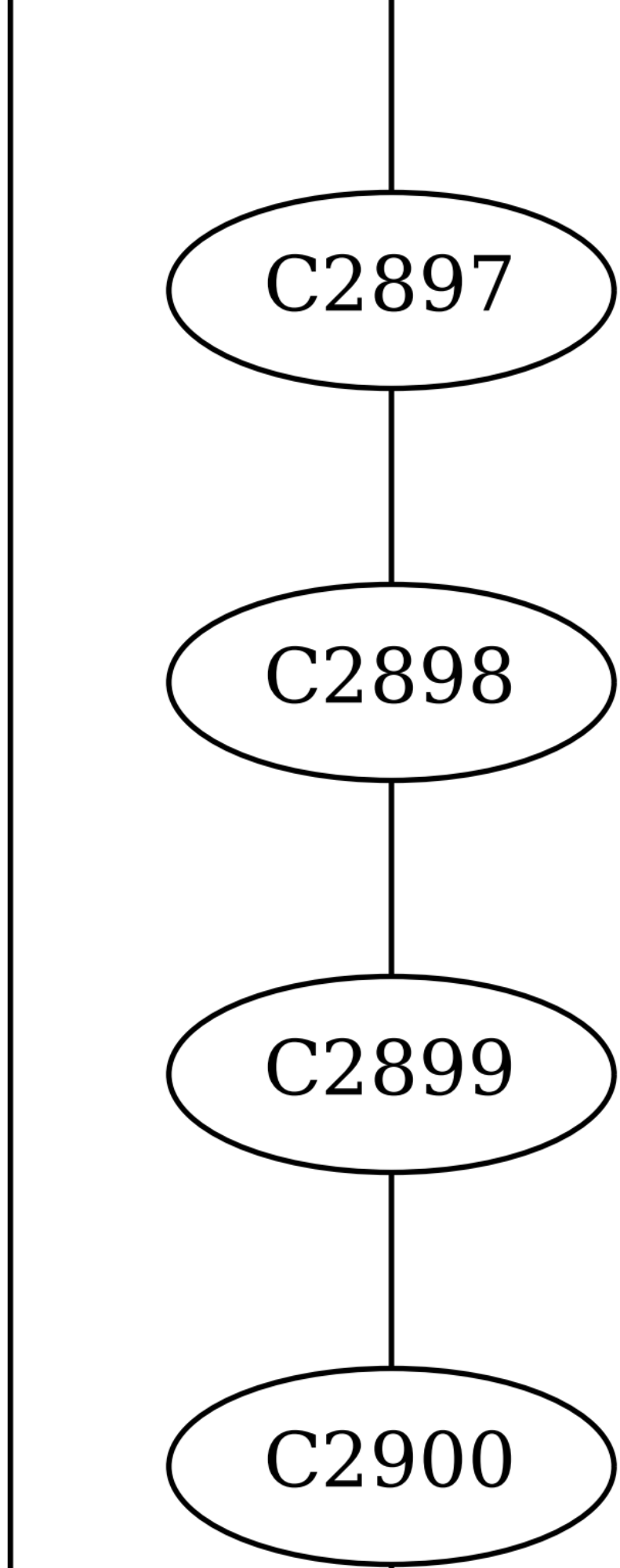
C2897
C2898
C2899
C2900

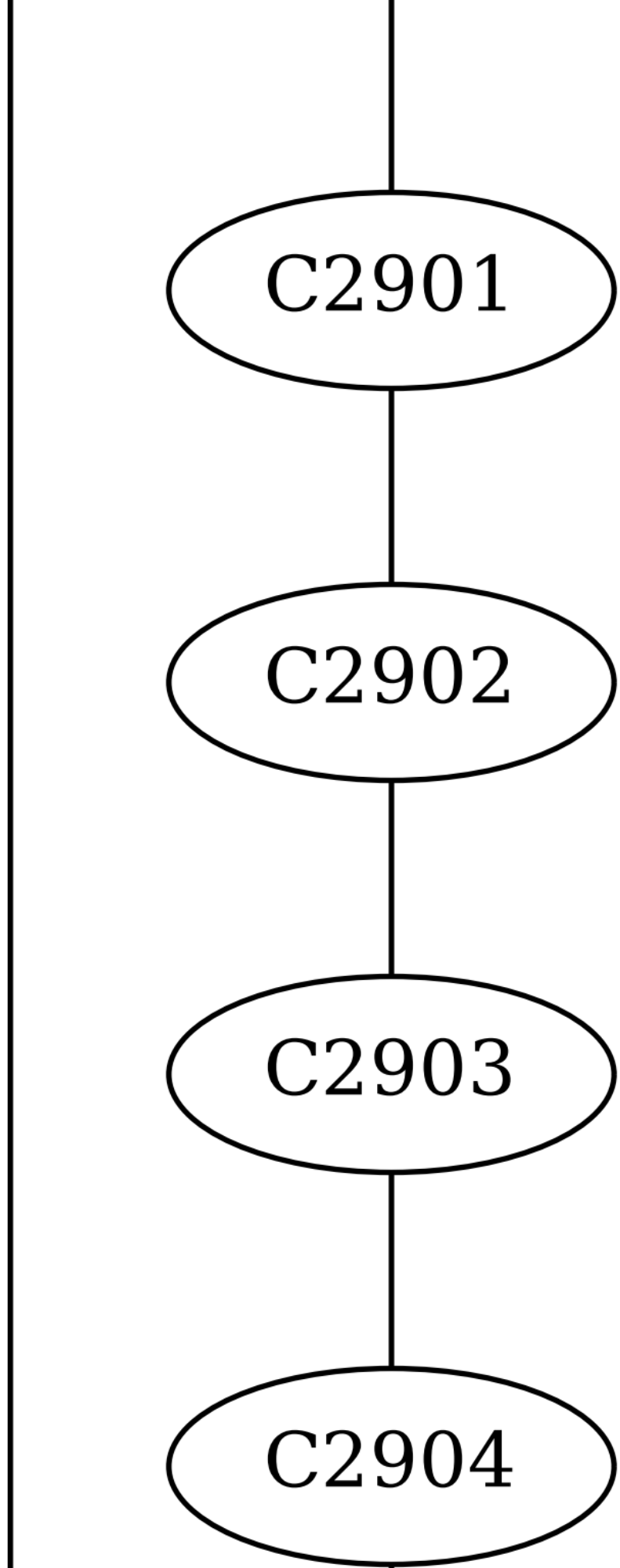
C2901
C2902
C2903
C2904

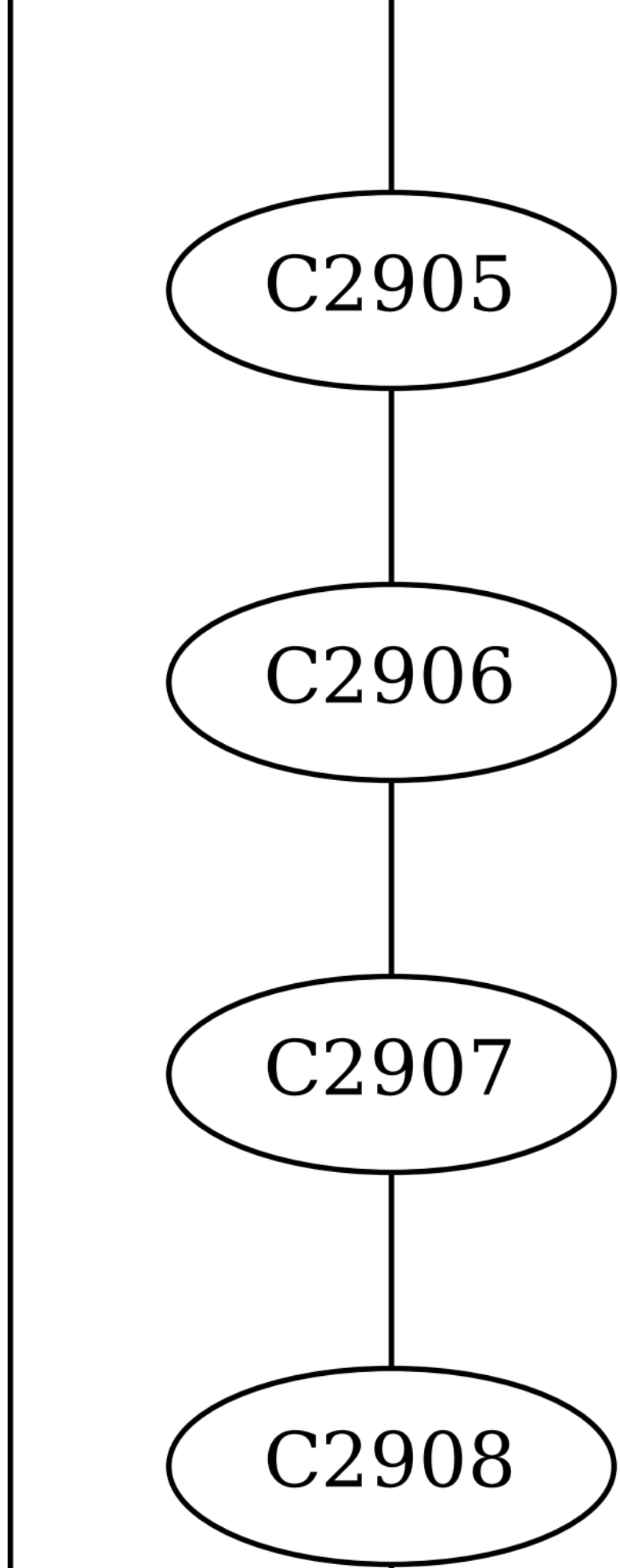
C2905
C2906
C2907
C2908

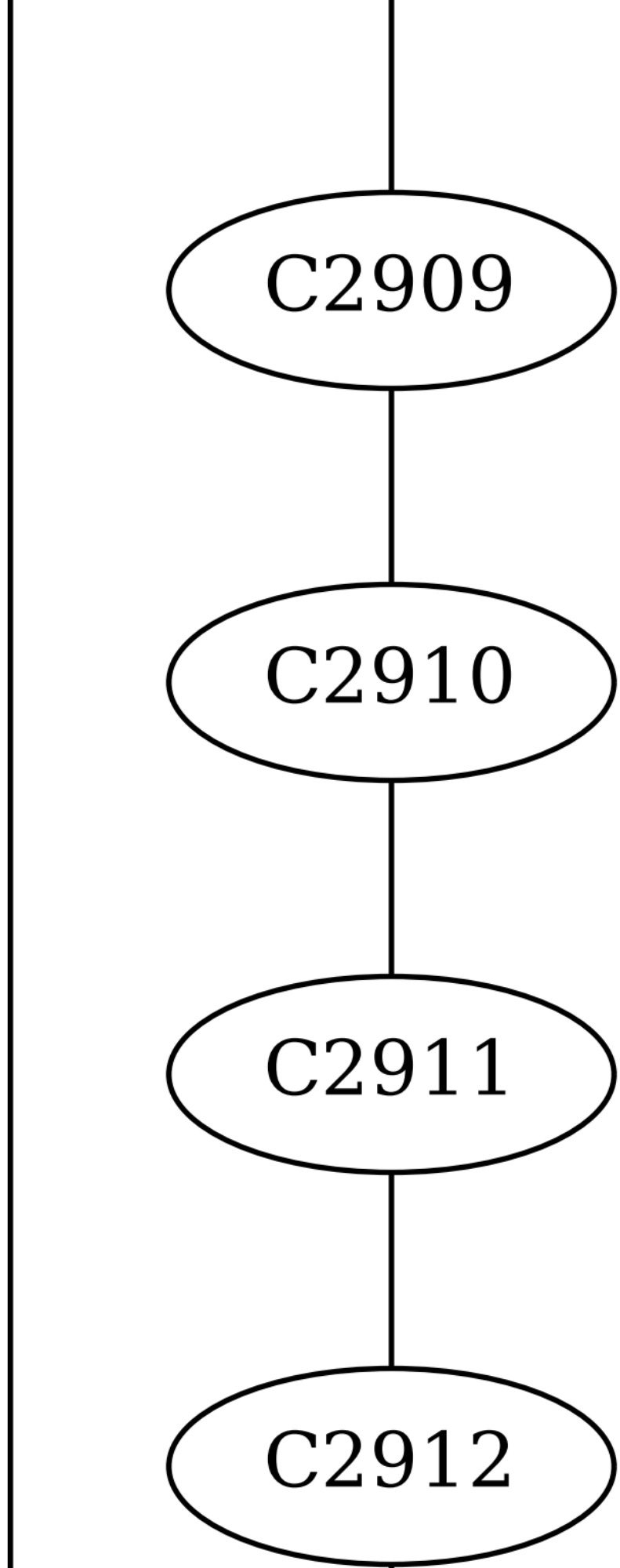
C2909
C2910
C2911
C2912

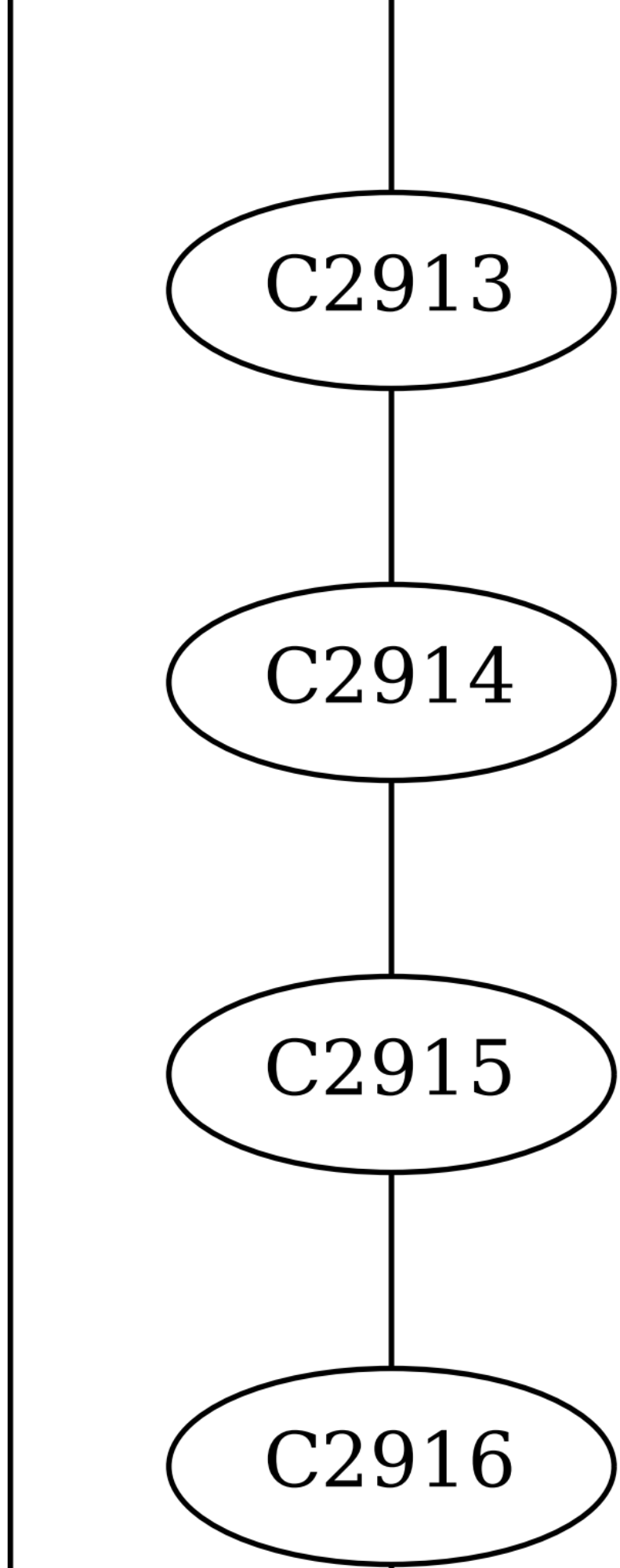
C2913
C2914
C2915
C2916

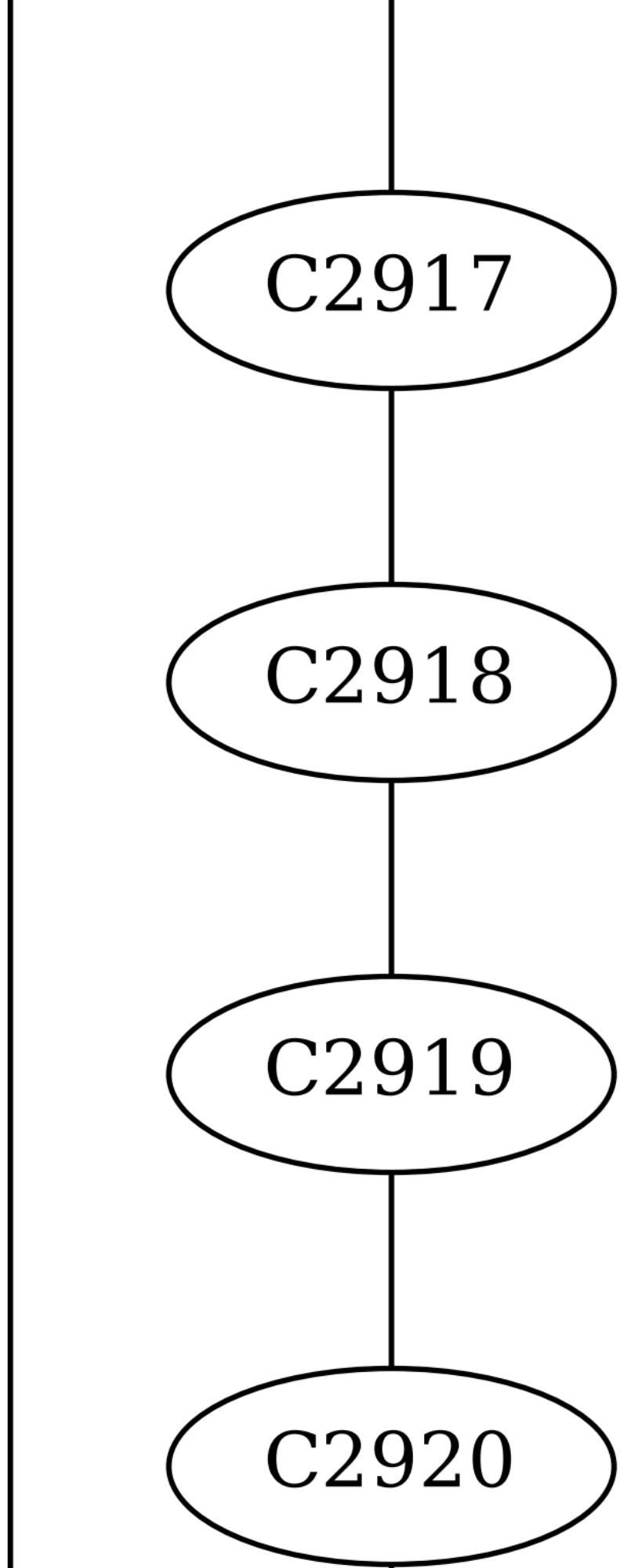
C2917
C2918
C2919
C2920

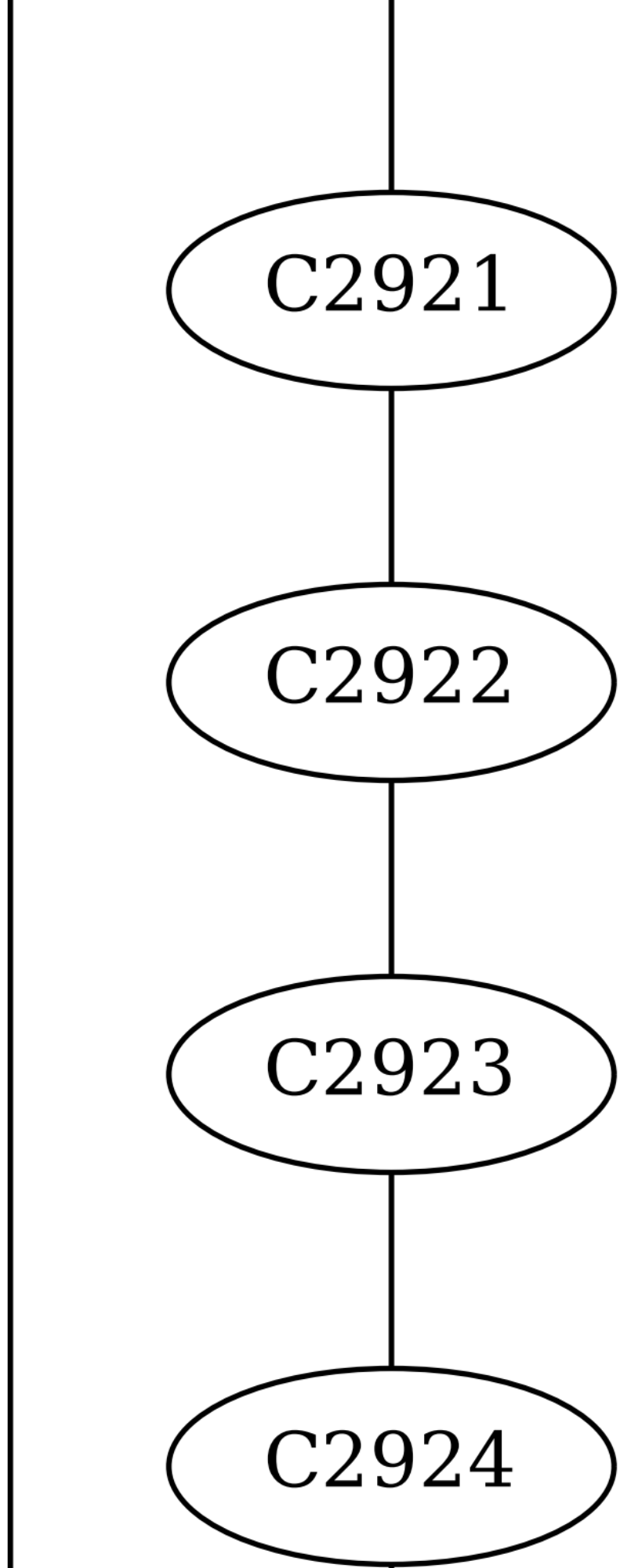
C2921
C2922
C2923
C2924

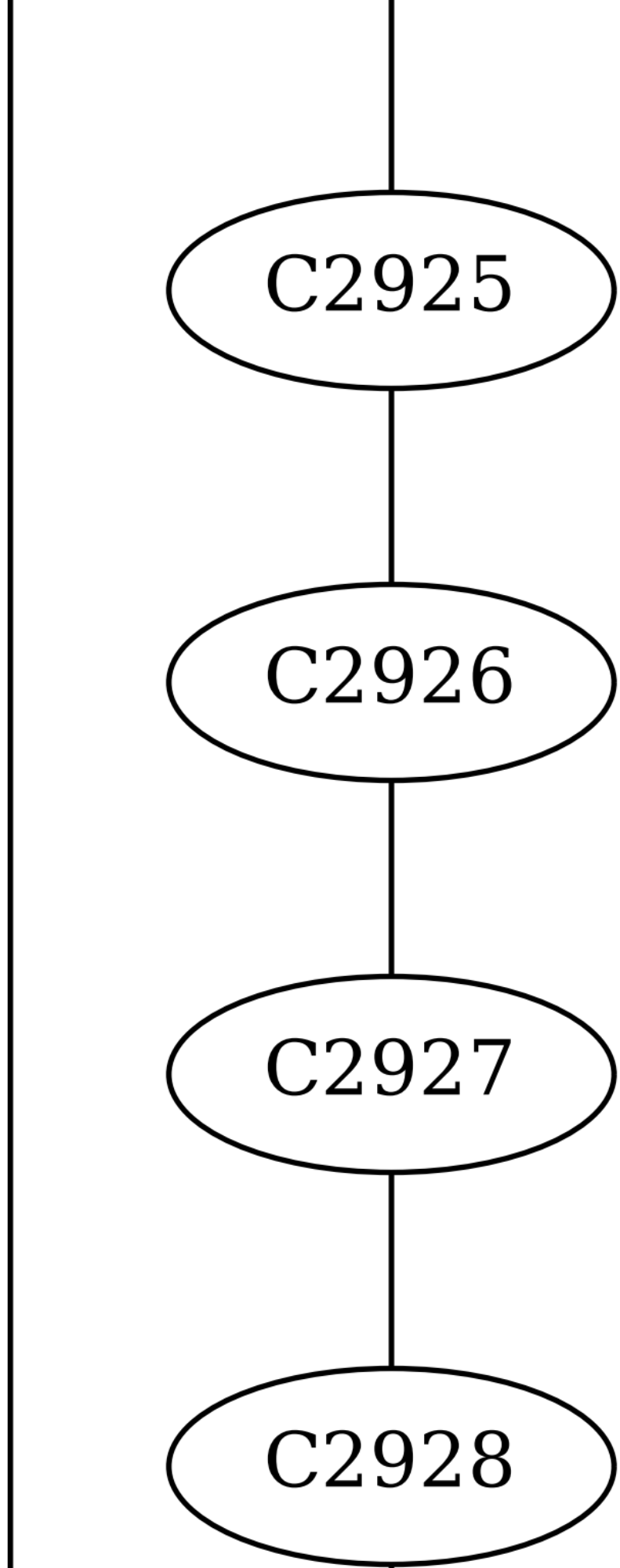
C2925
C2926
C2927
C2928

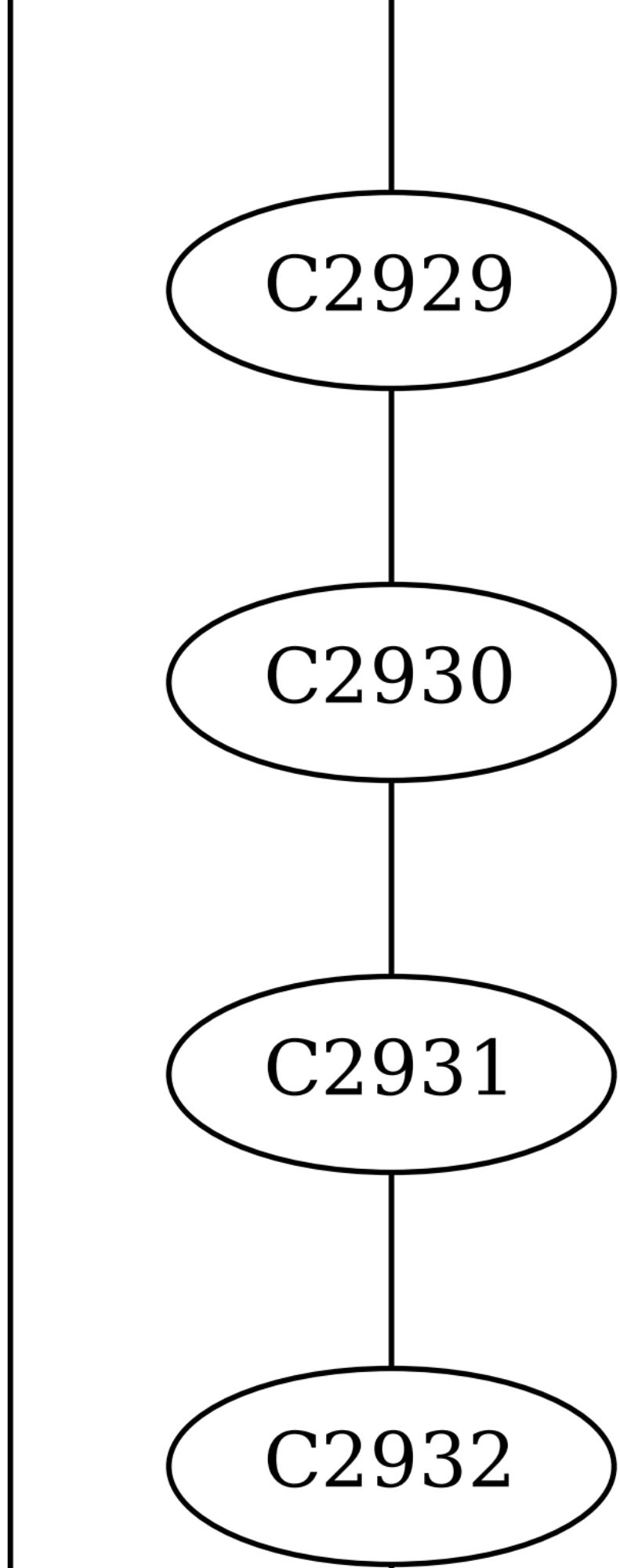
C2929
C2930
C2931
C2932

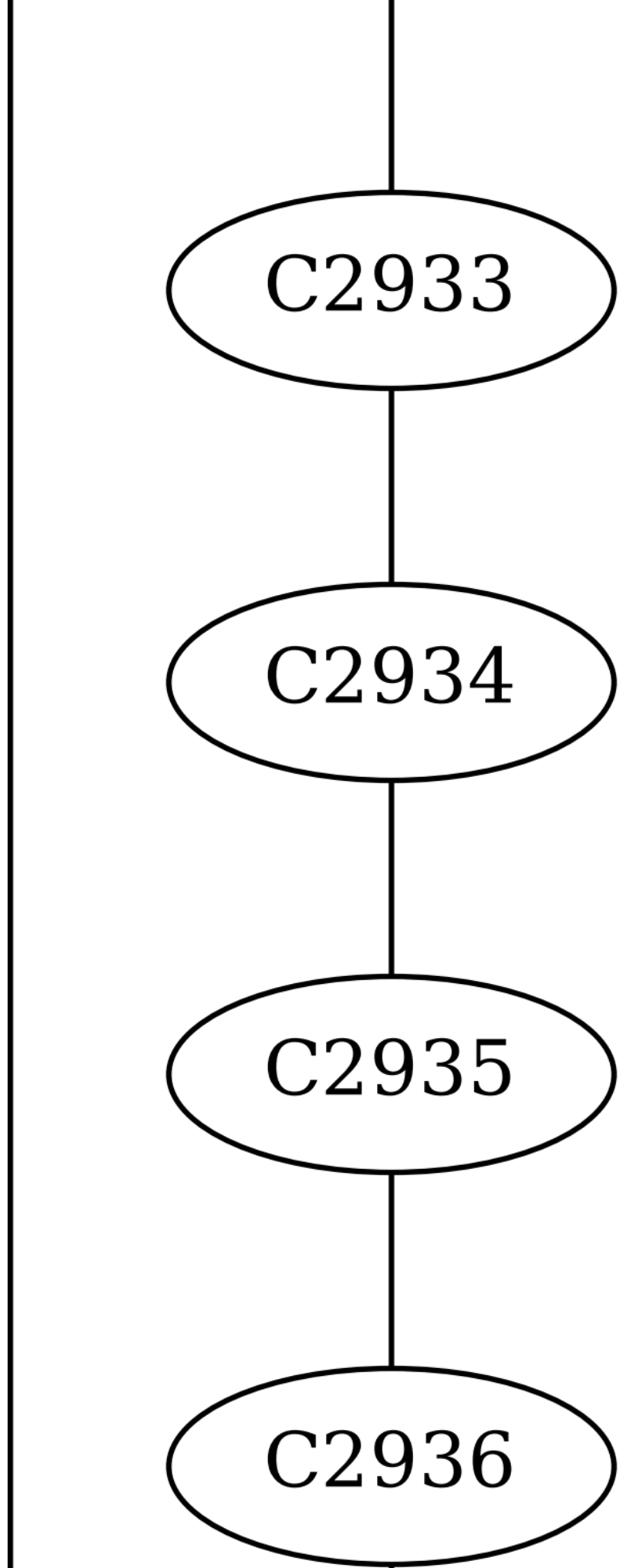
C2933
C2934
C2935
C2936

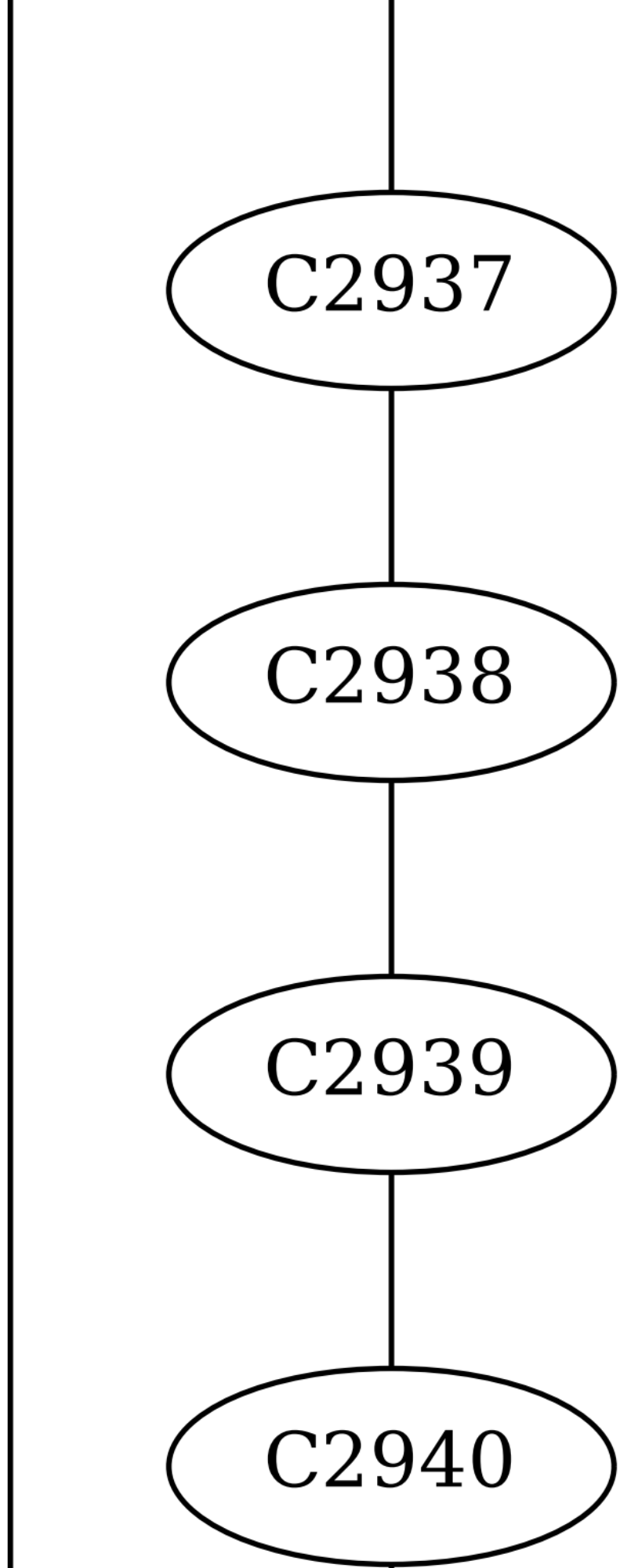
C2937
C2938
C2939
C2940

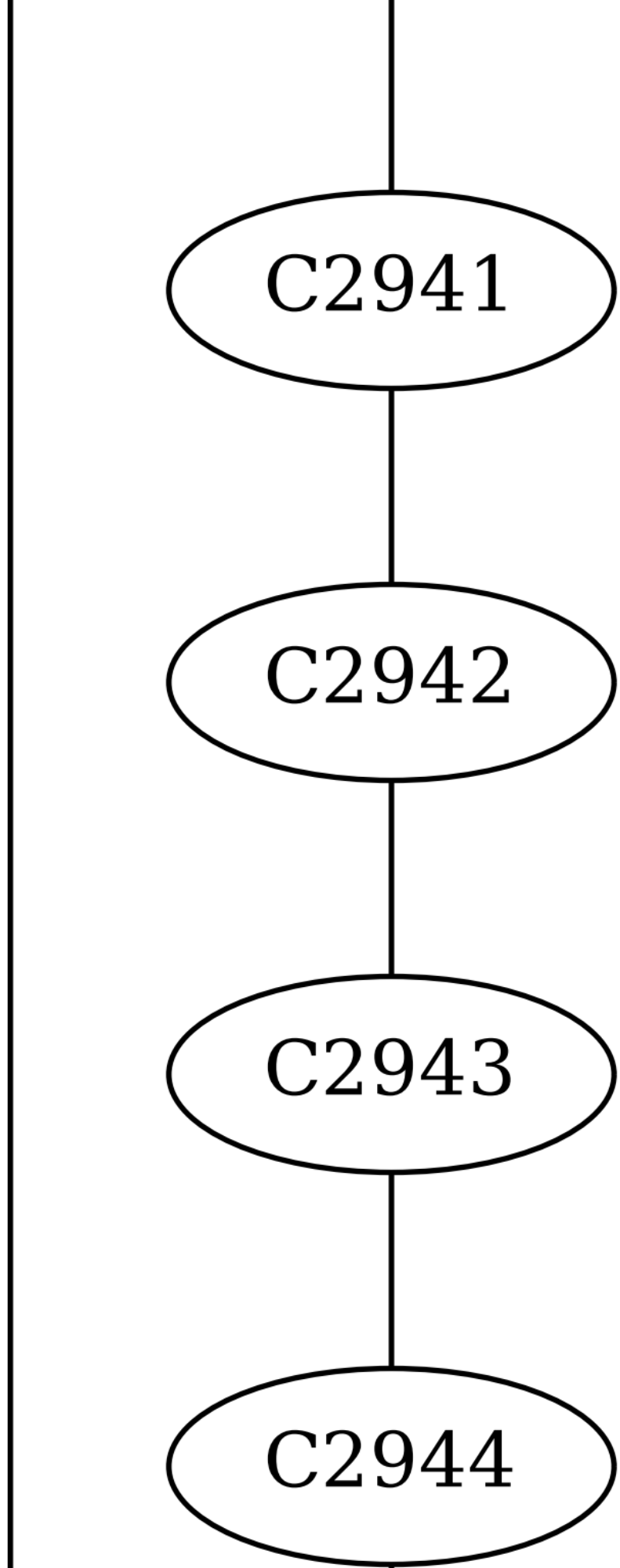
C2941
C2942
C2943
C2944

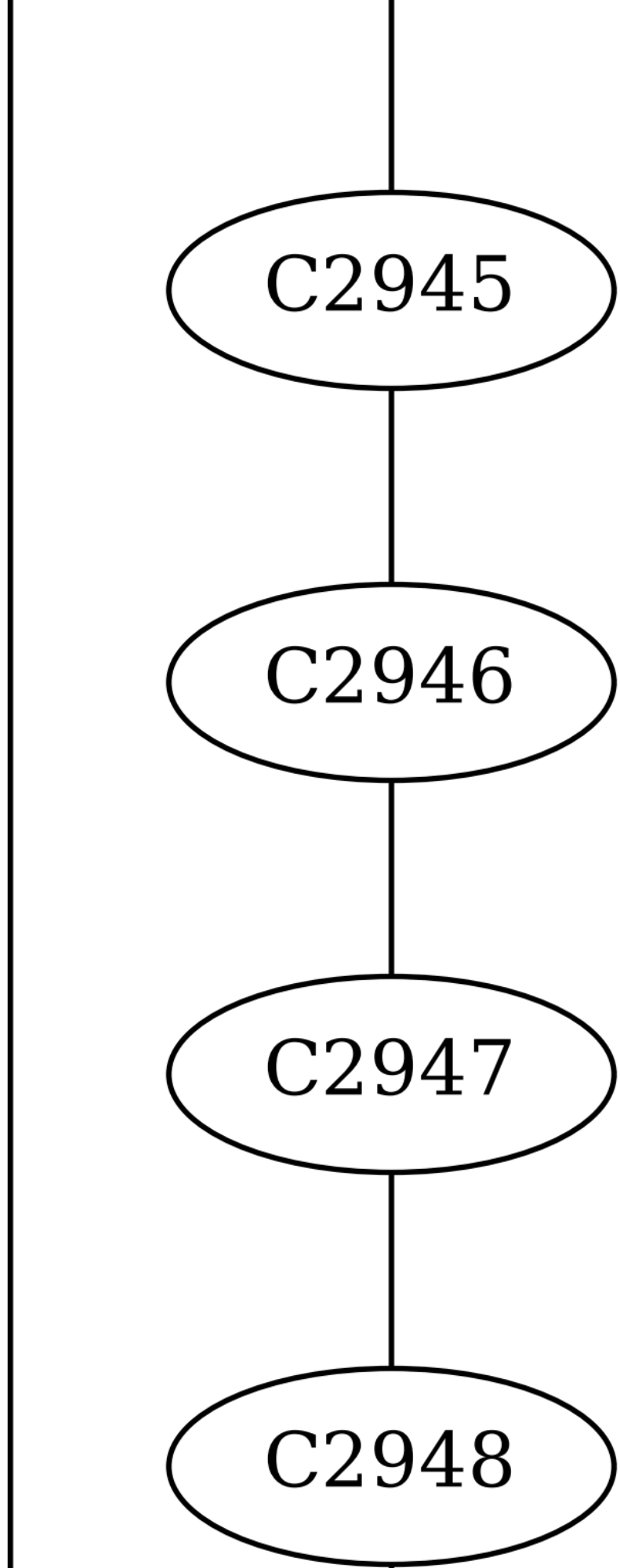
C2945
C2946
C2947
C2948

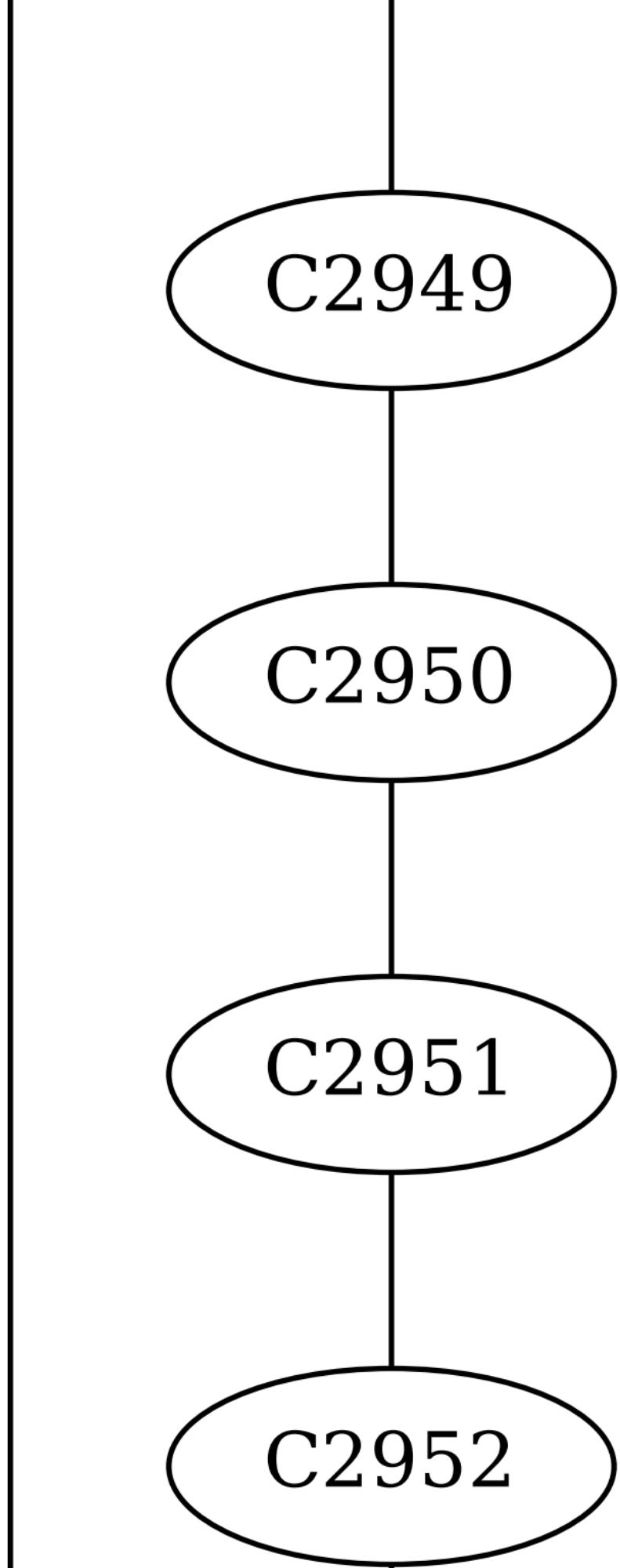
C2949
C2950
C2951
C2952

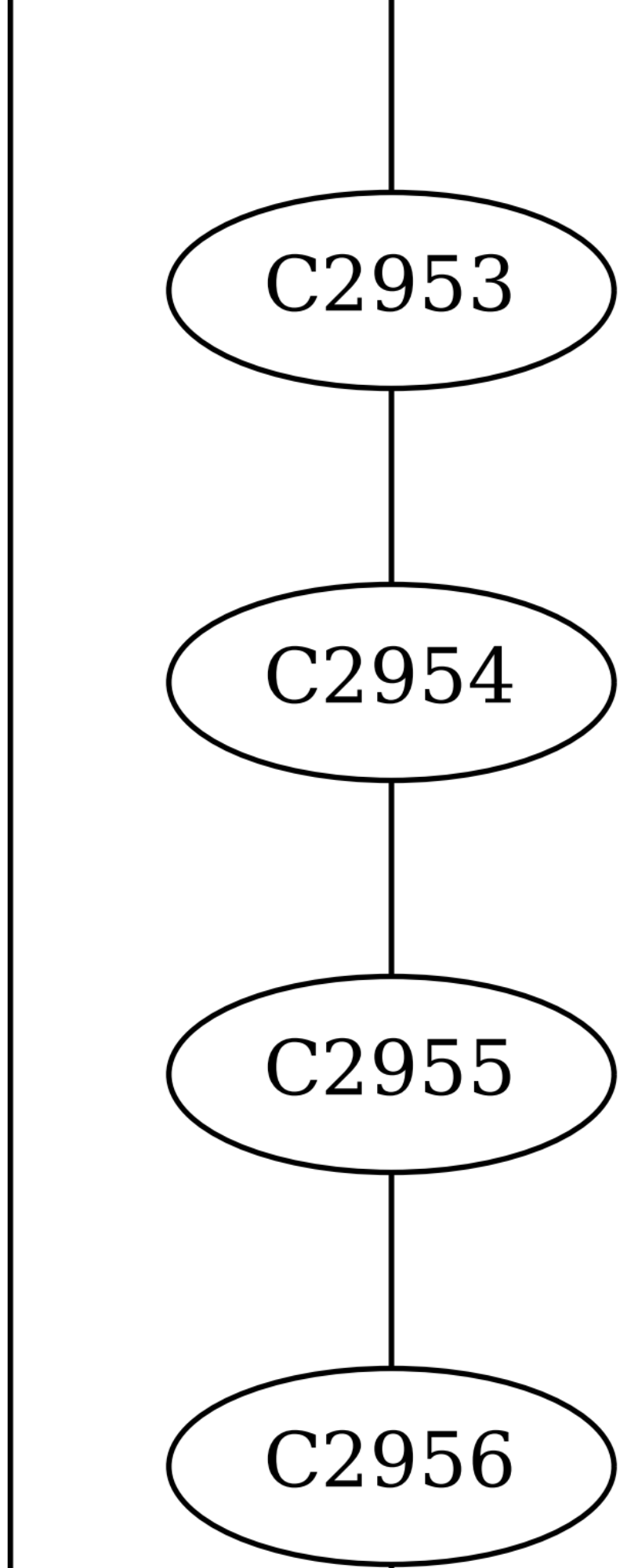
C2953
C2954
C2955
C2956

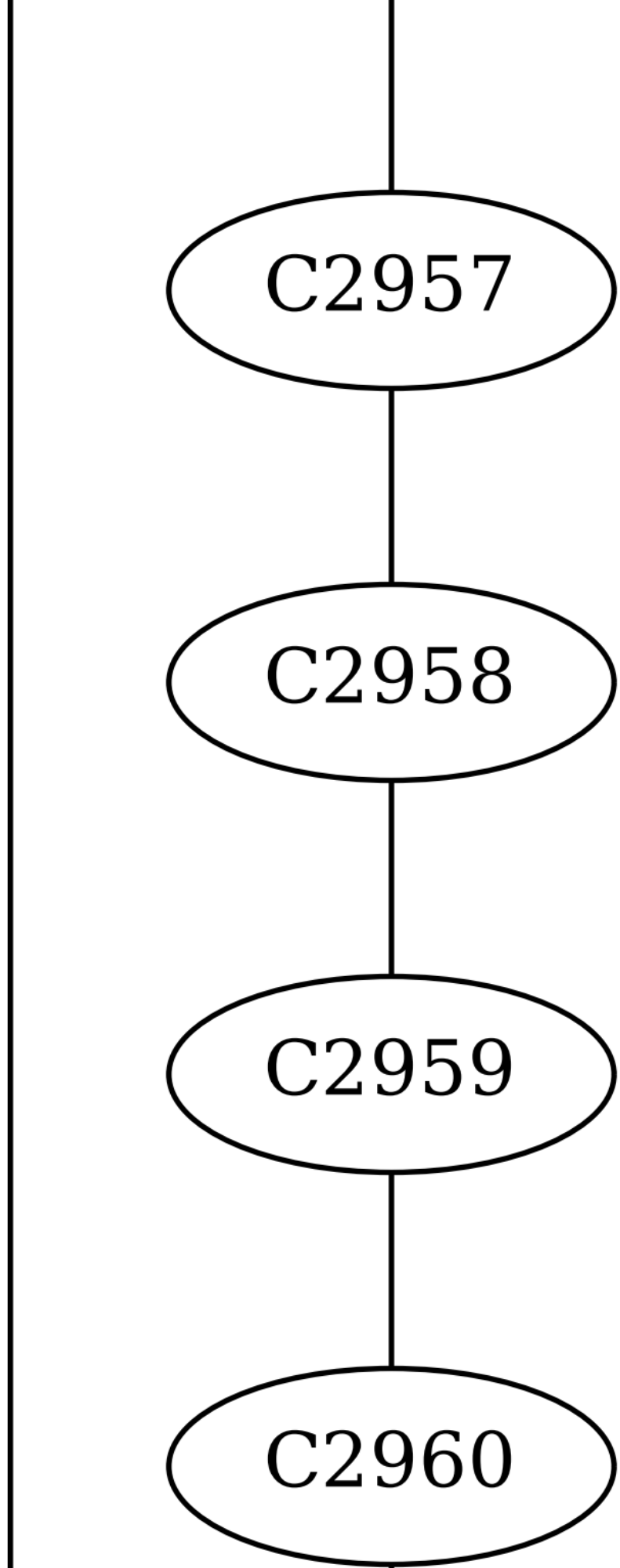
C2957
C2958
C2959
C2960

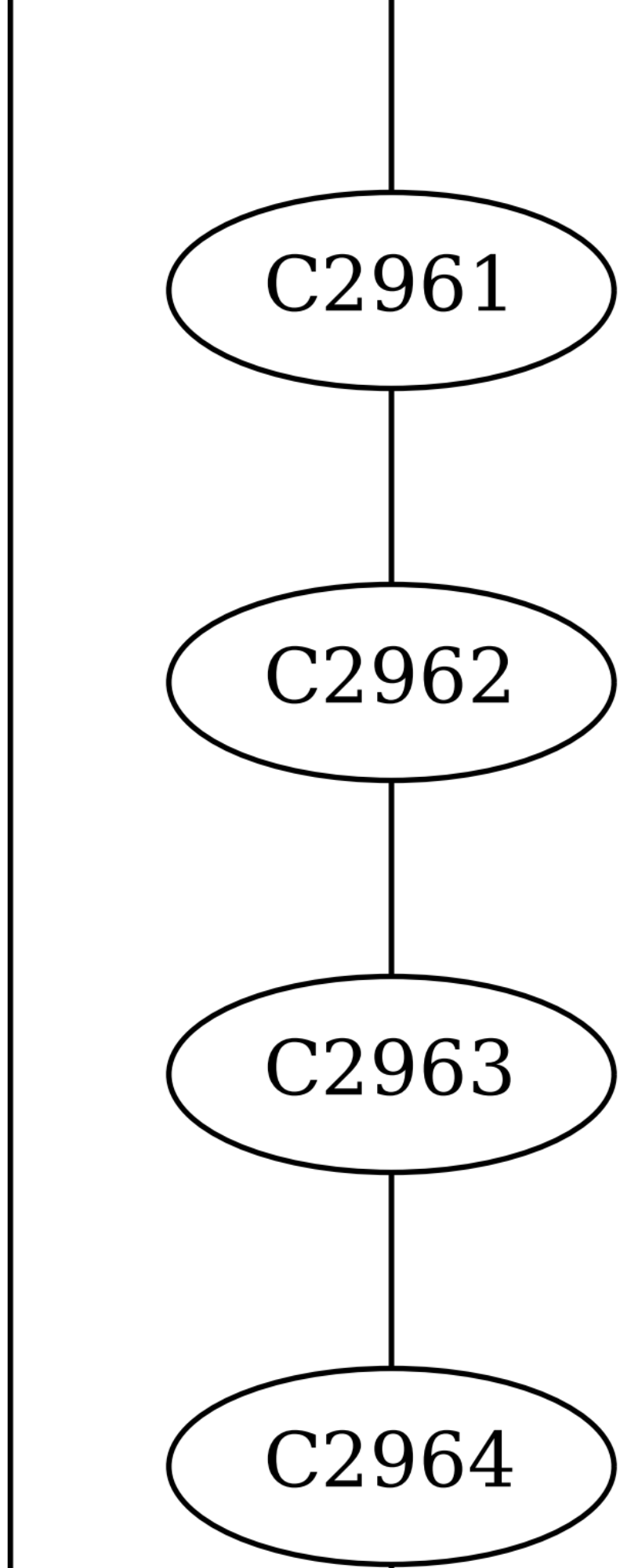
C2961
C2962
C2963
C2964

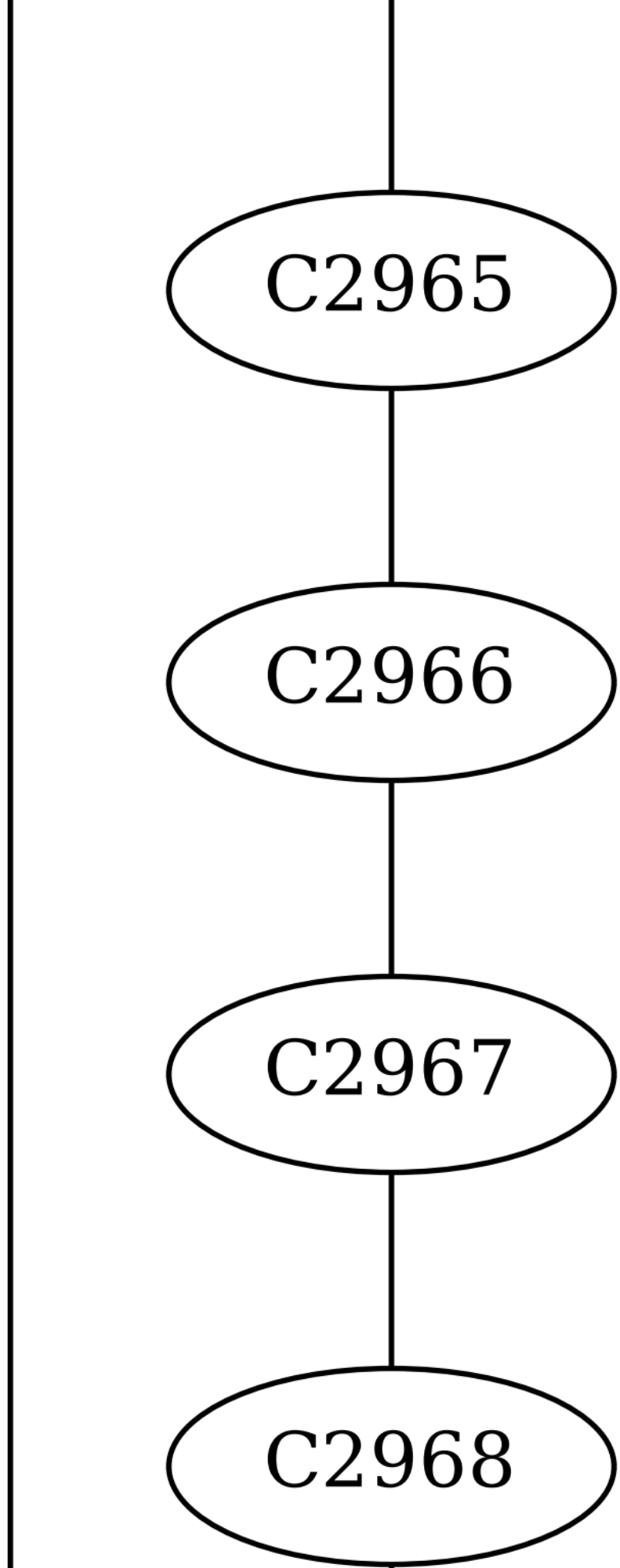
C2965
C2966
C2967
C2968

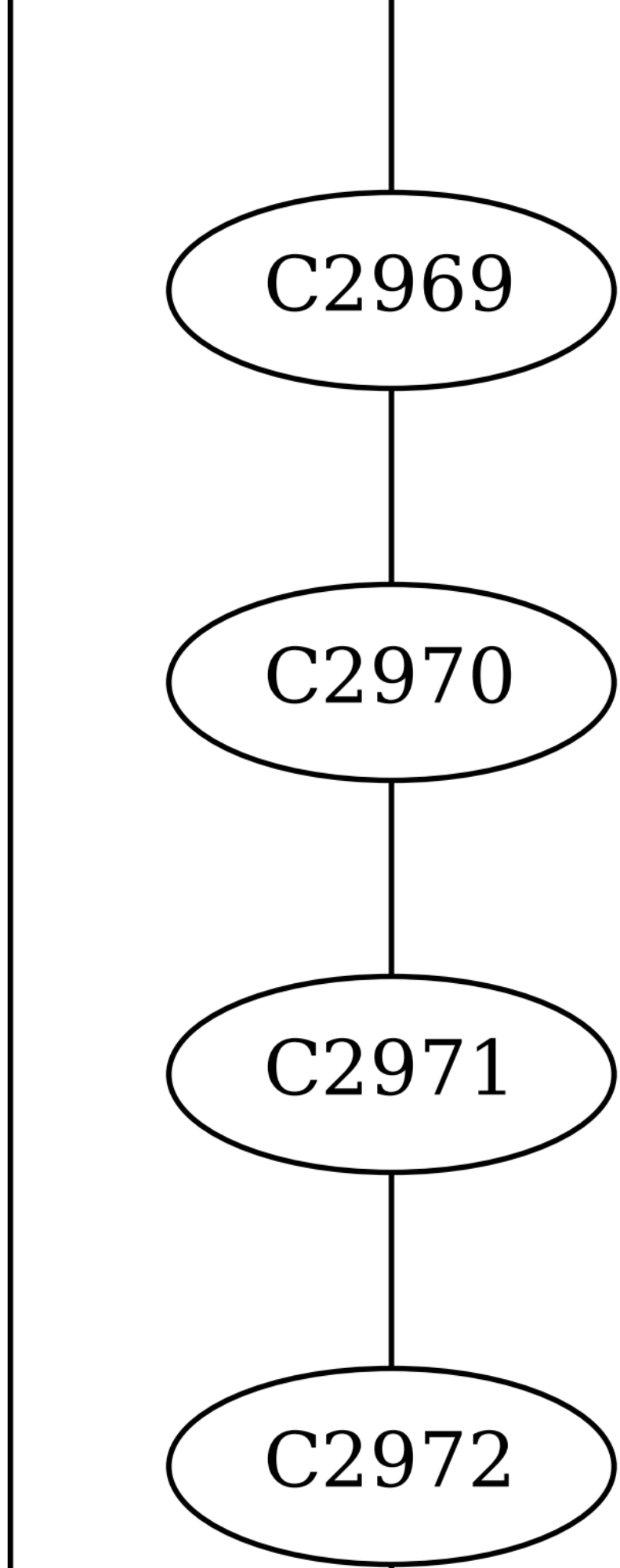
C2969
C2970
C2971
C2972

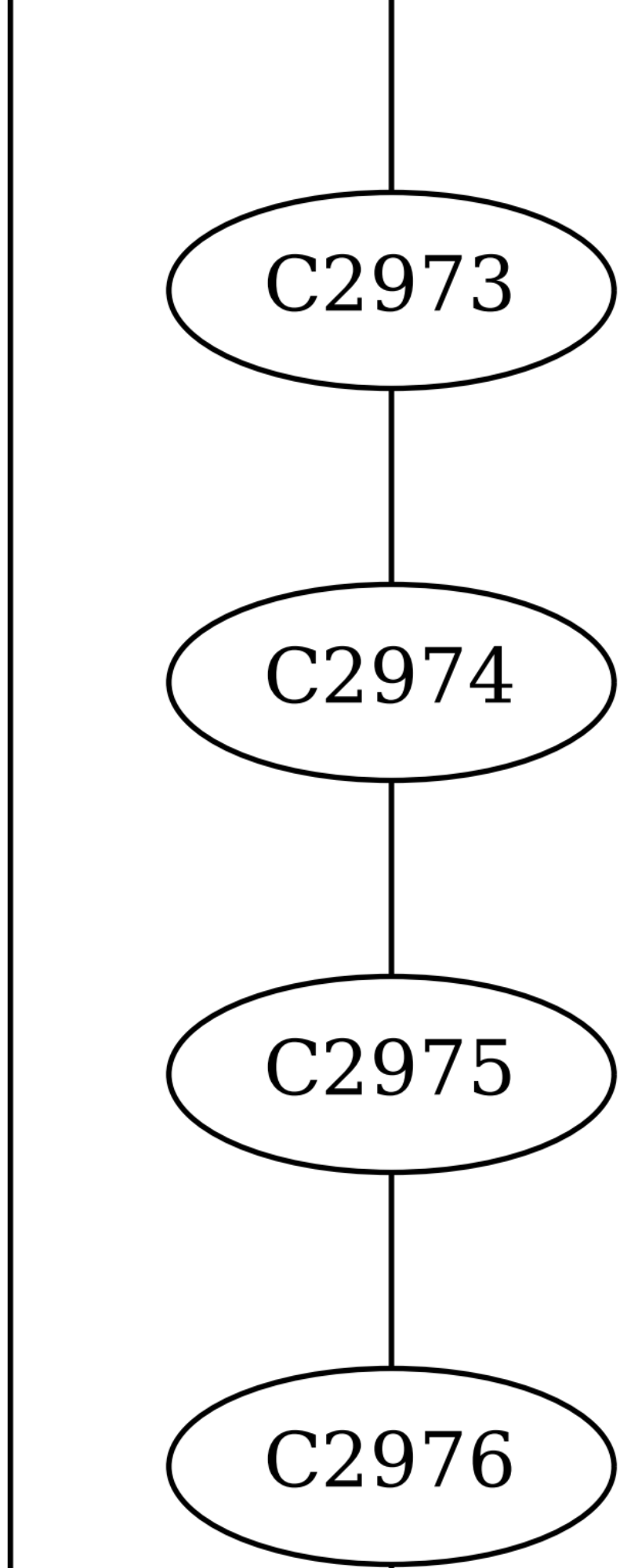
C2973
C2974
C2975
C2976

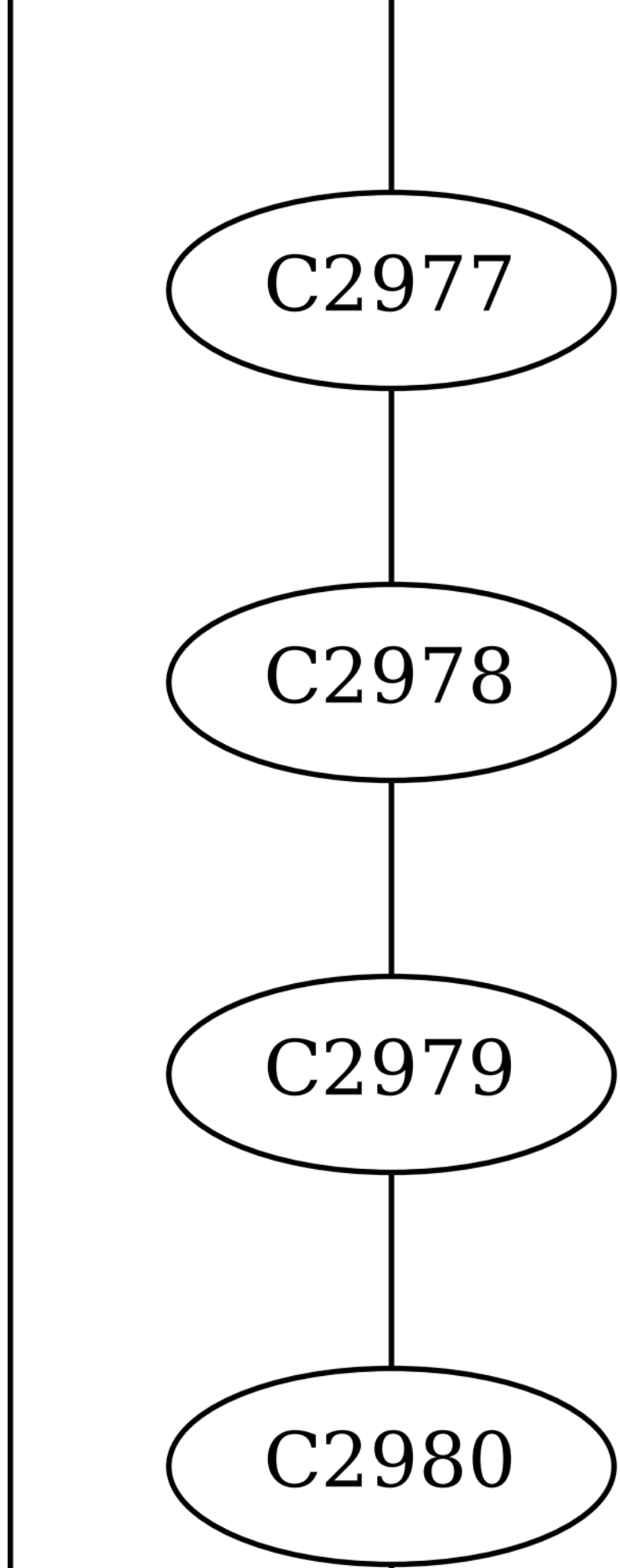
C2977
C2978
C2979
C2980

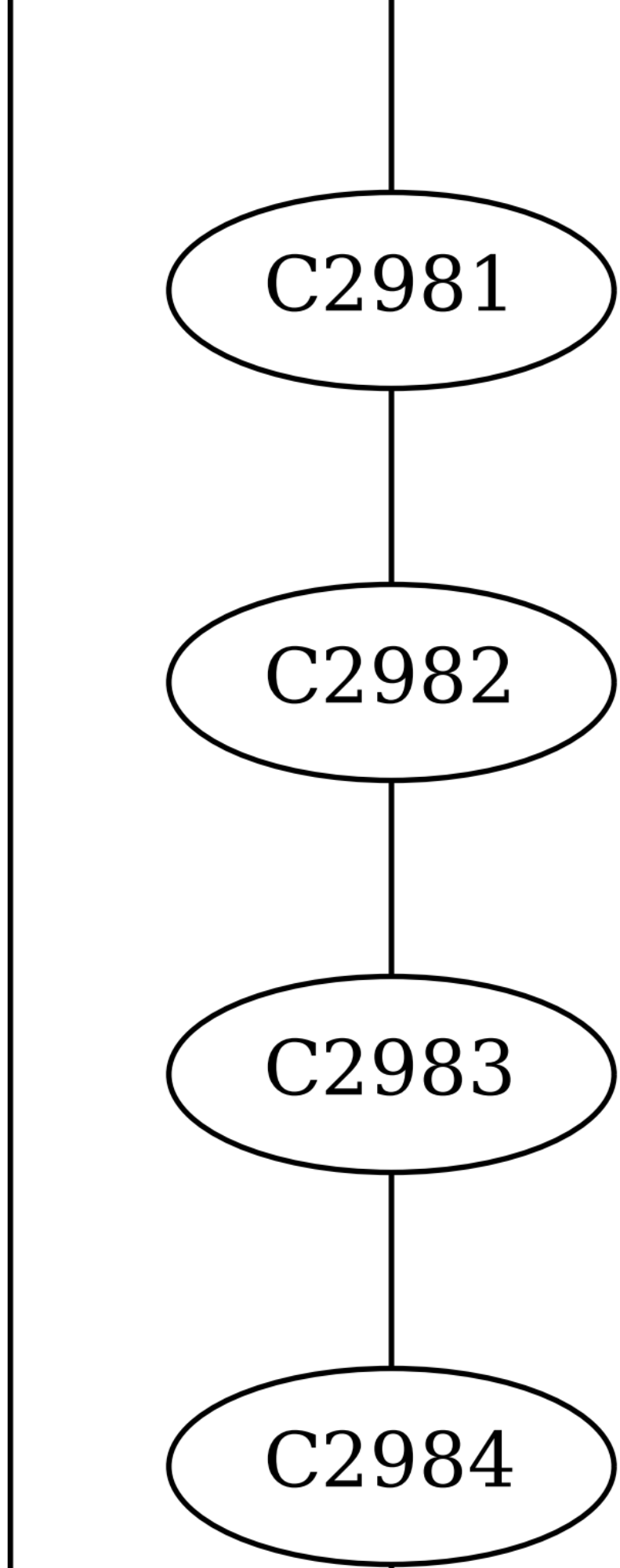
C2981
C2982
C2983
C2984

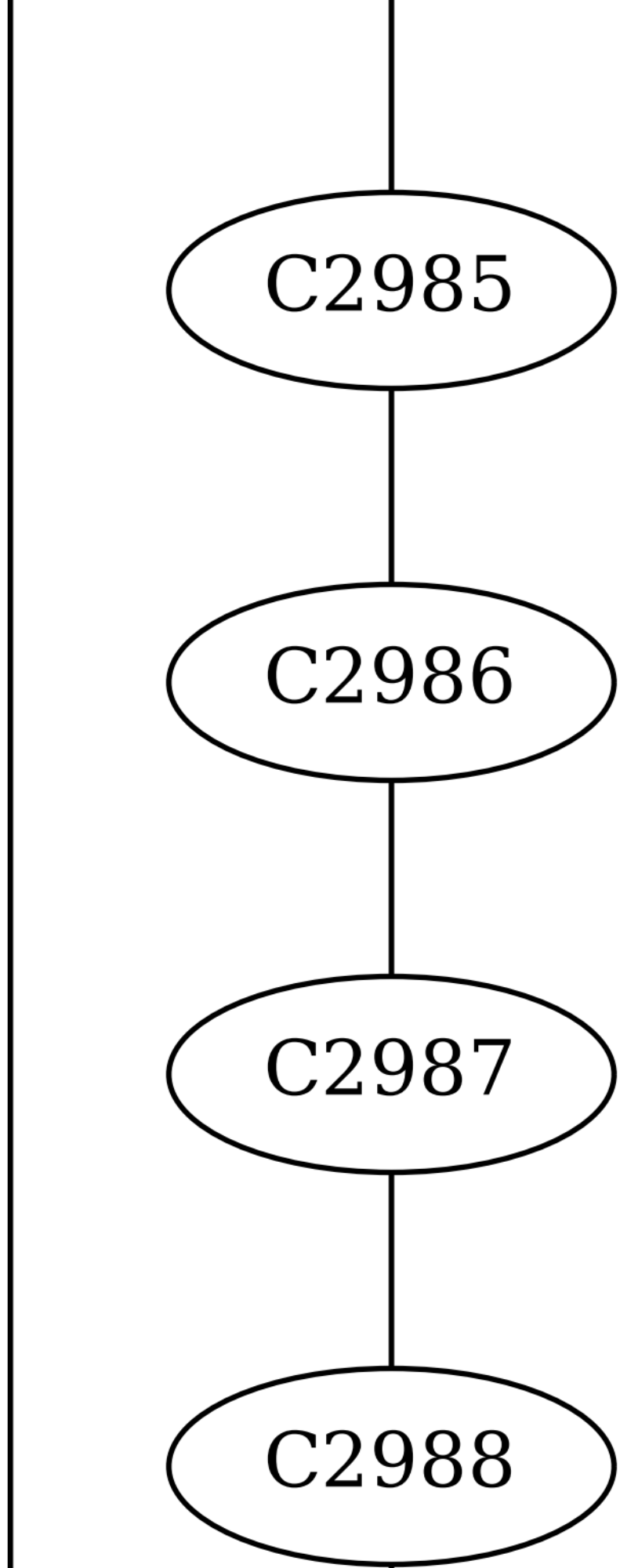
C2985
C2986
C2987
C2988

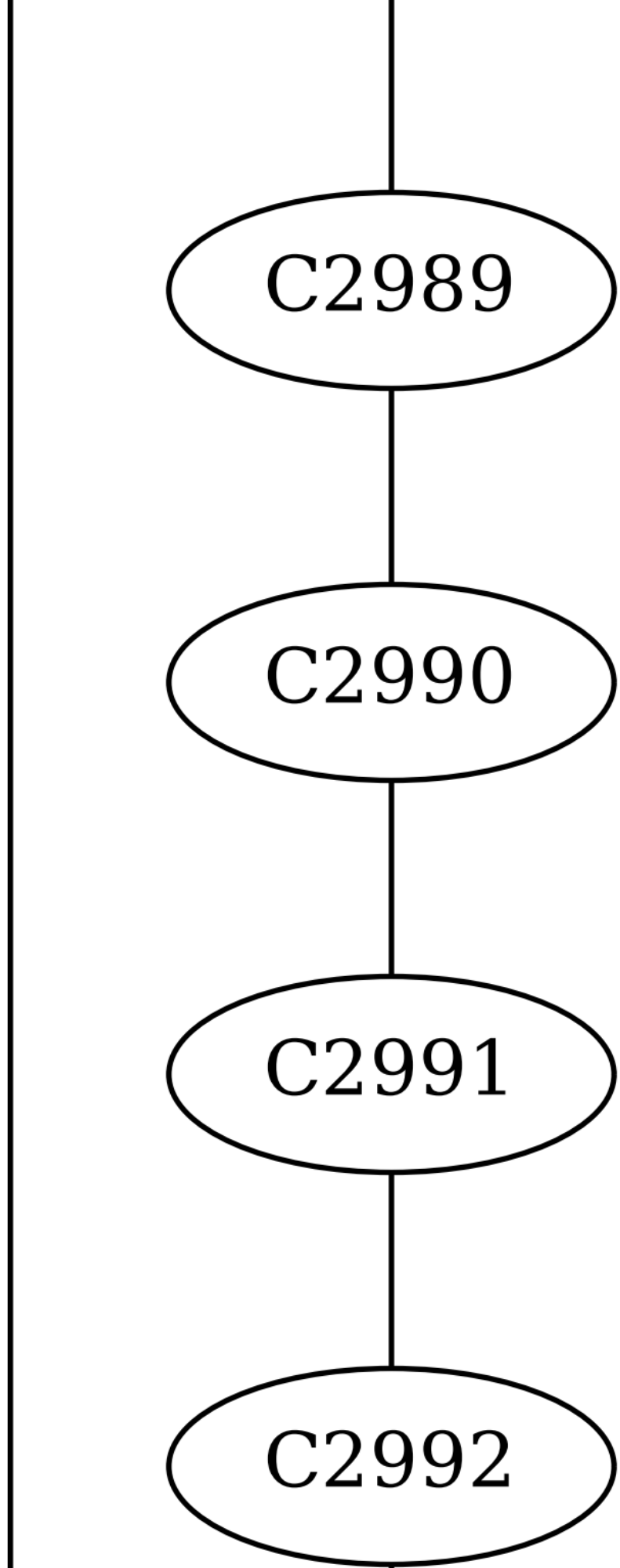
C2989
C2990
C2991
C2992

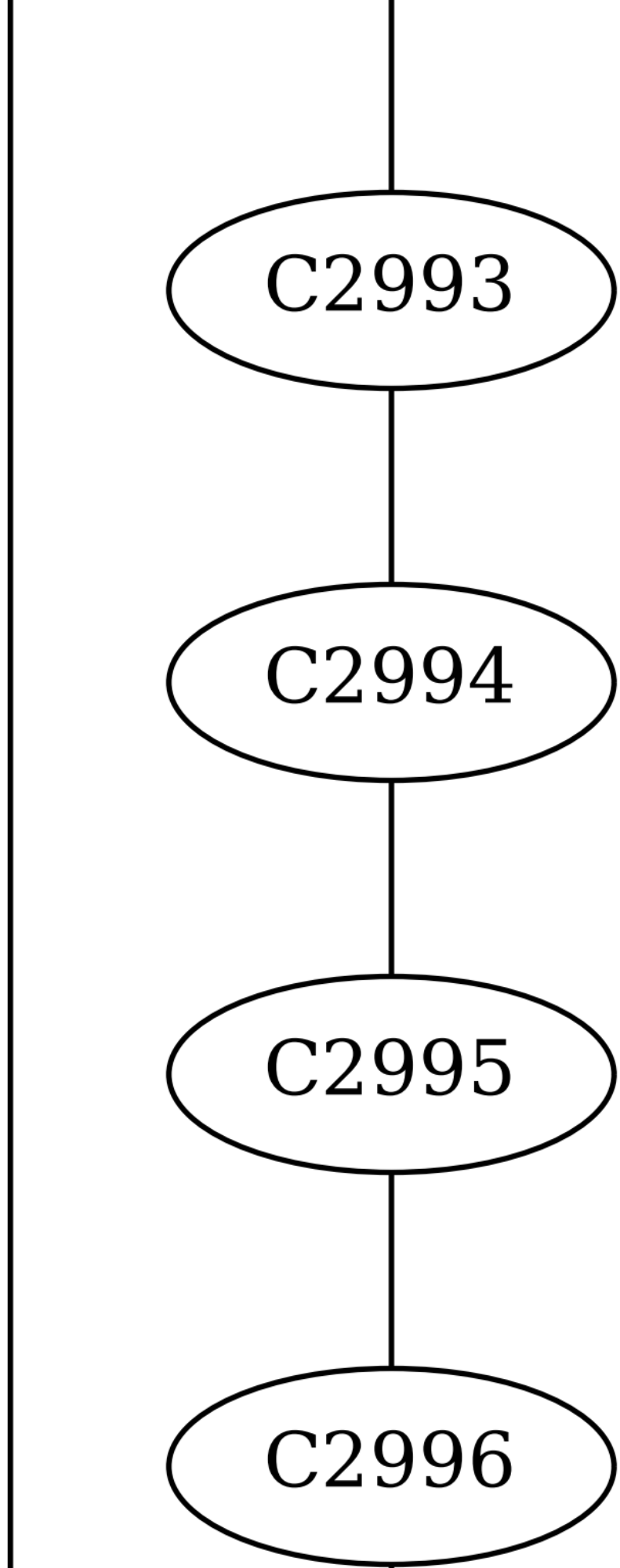
C2993
C2994
C2995
C2996

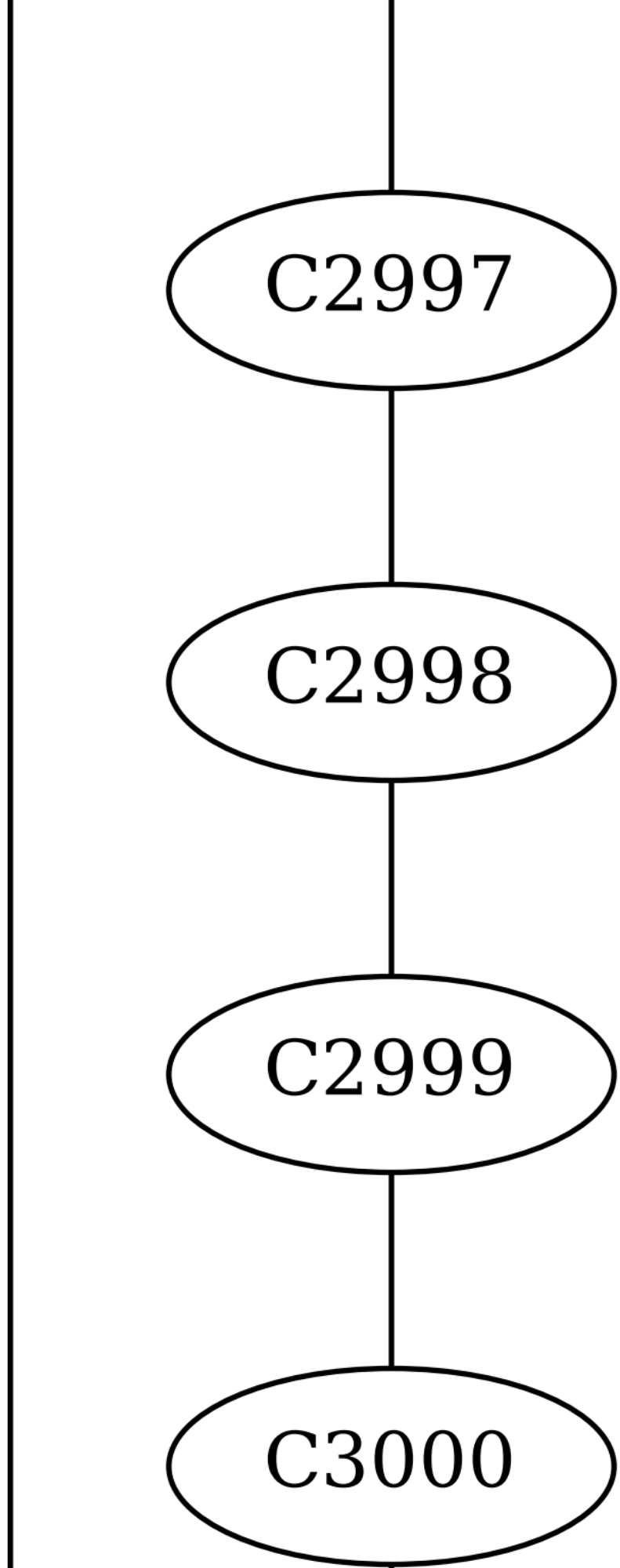
C2997
C2998
C2999
C3000

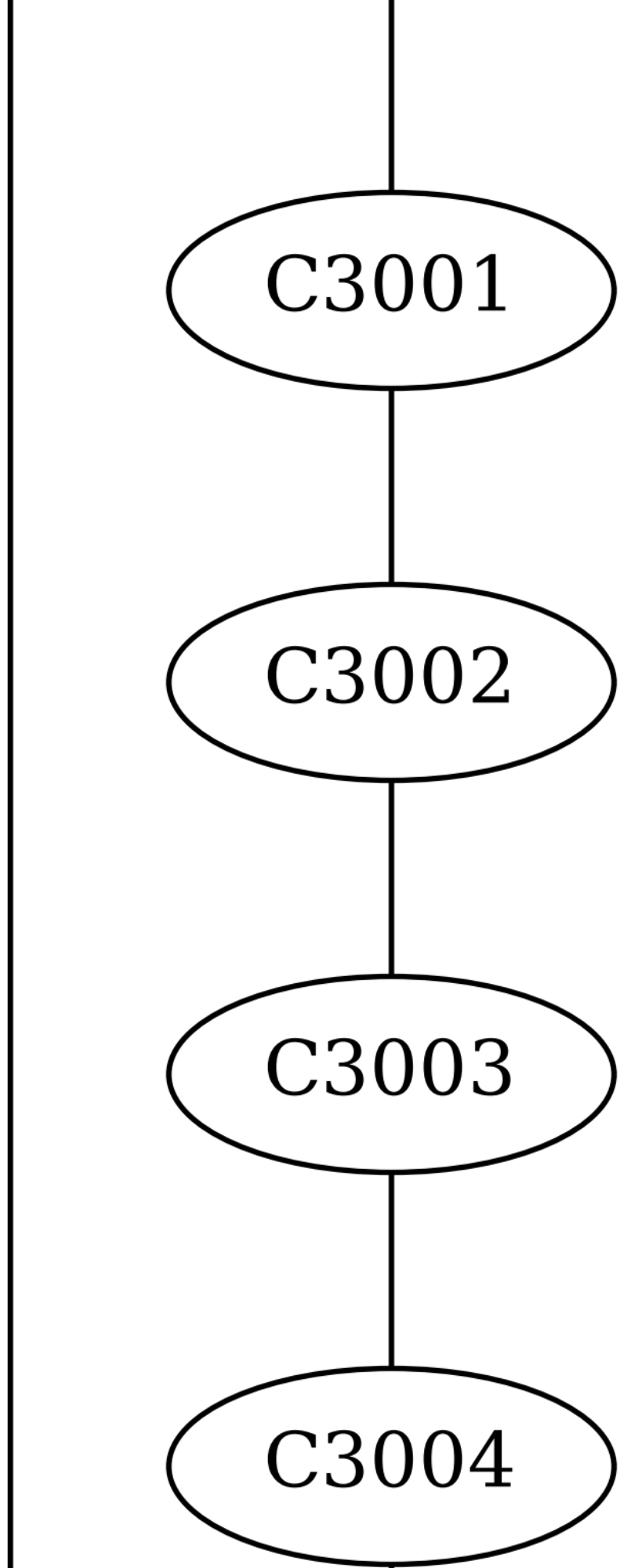
C3001
C3002
C3003
C3004

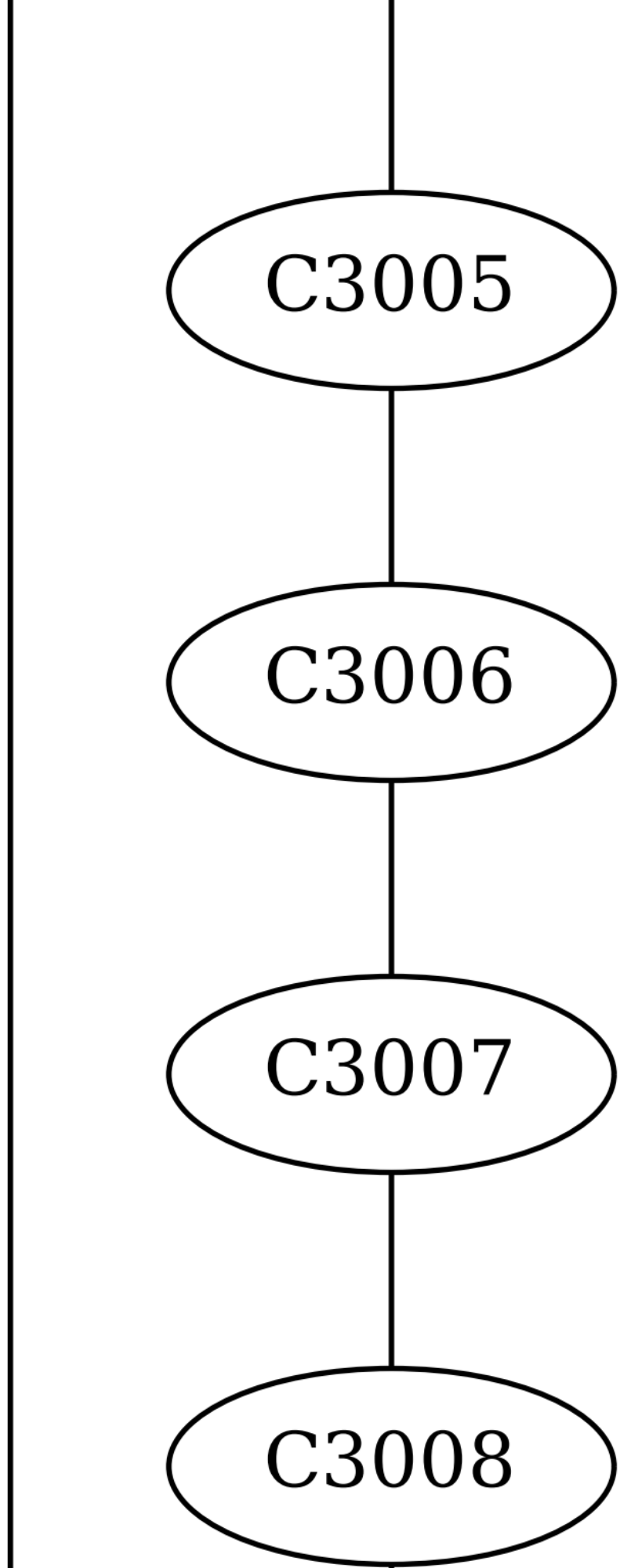
C3005
C3006
C3007
C3008

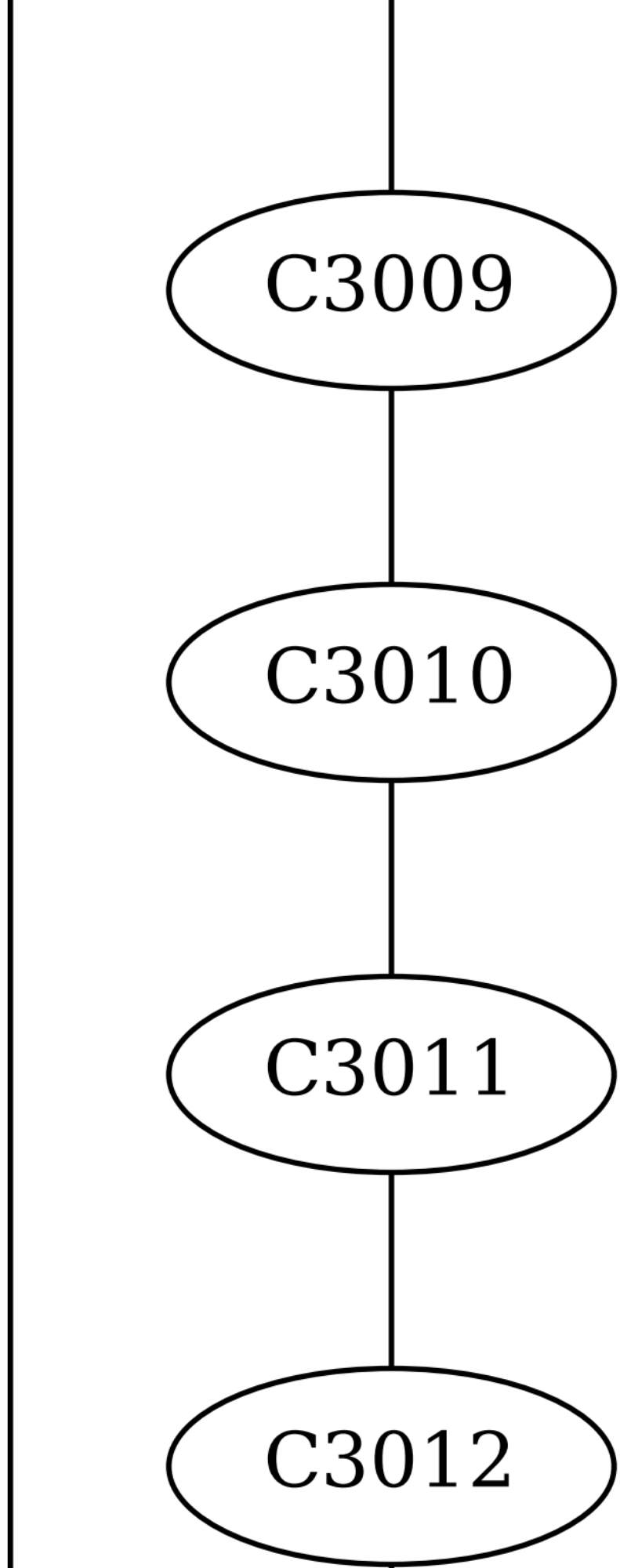
C3009
C3010
C3011
C3012

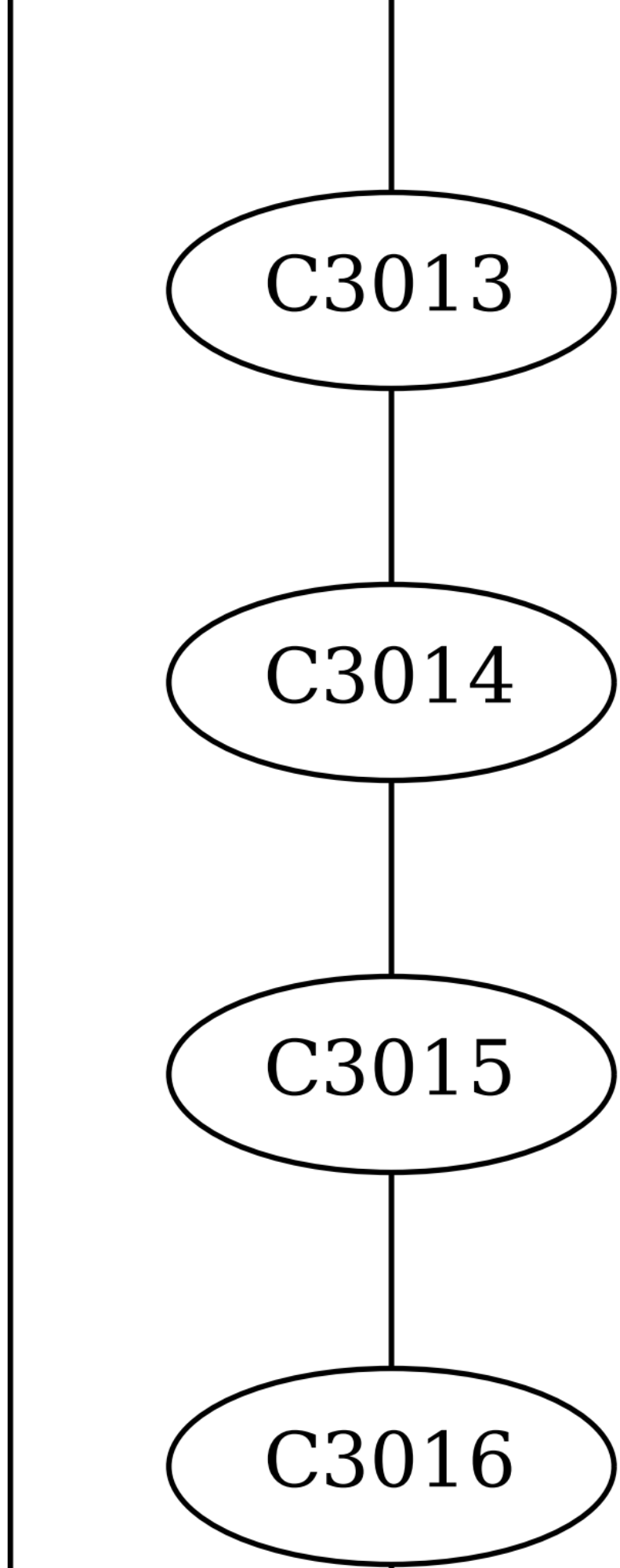
C3013
C3014
C3015
C3016

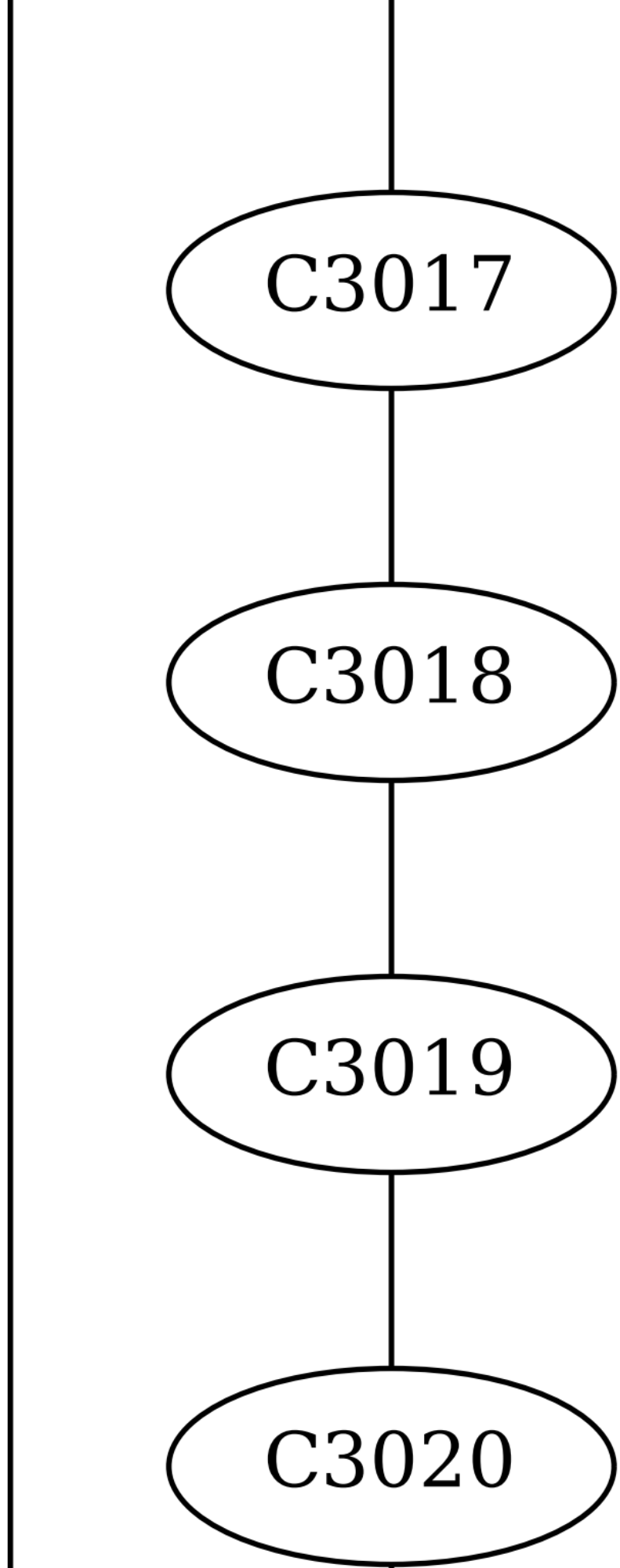
C3017
C3018
C3019
C3020

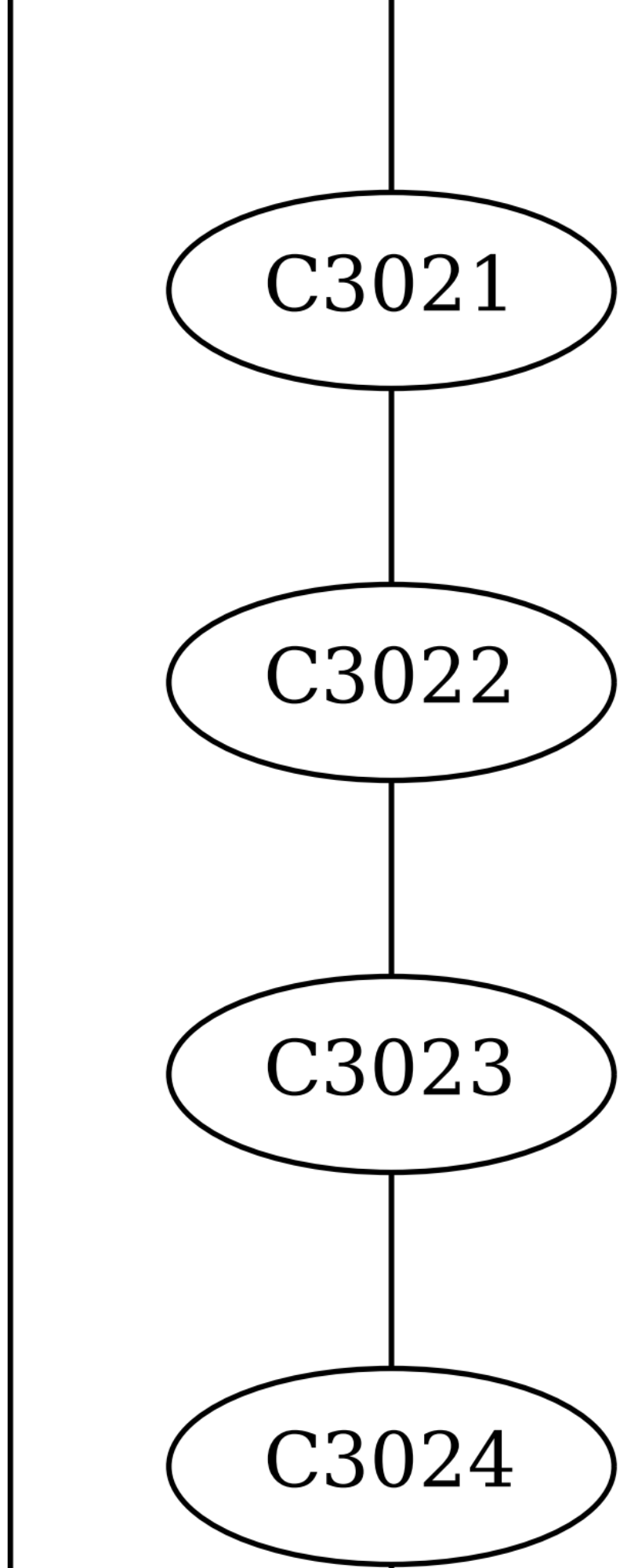
C3021
C3022
C3023
C3024

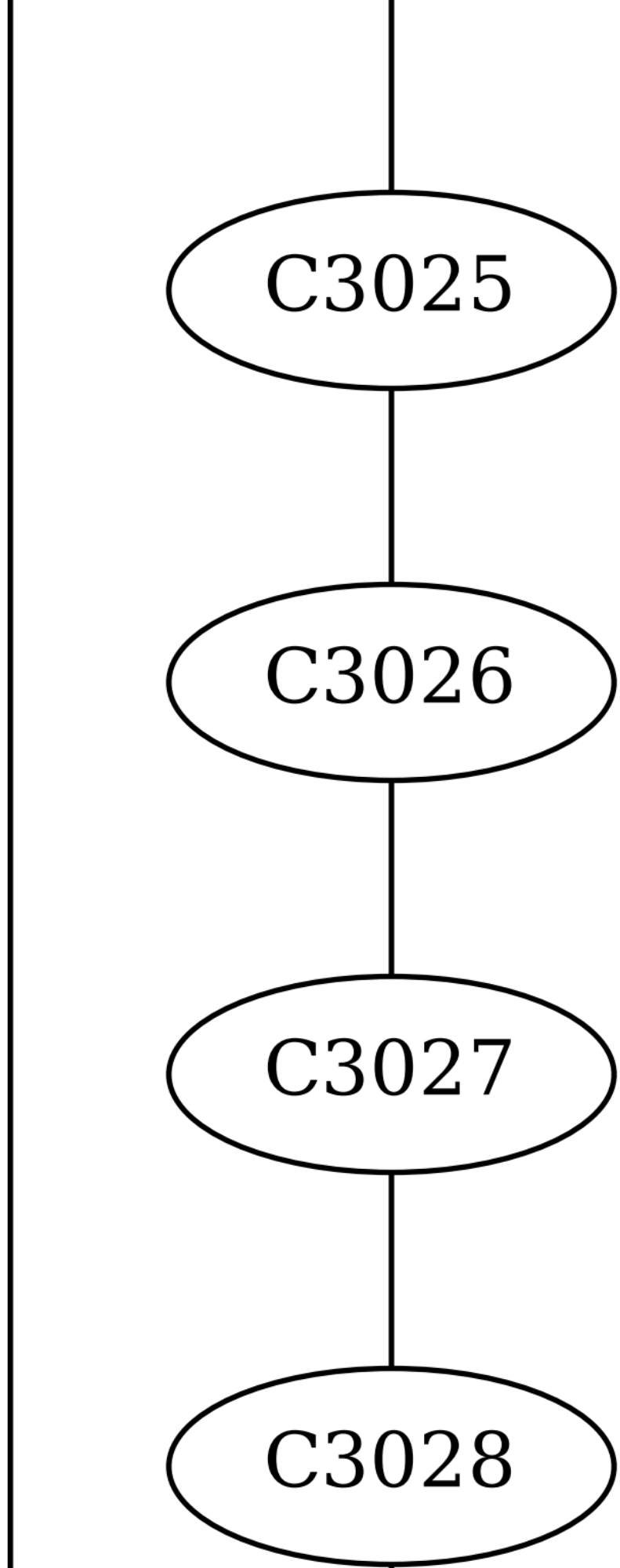
C3025
C3026
C3027
C3028

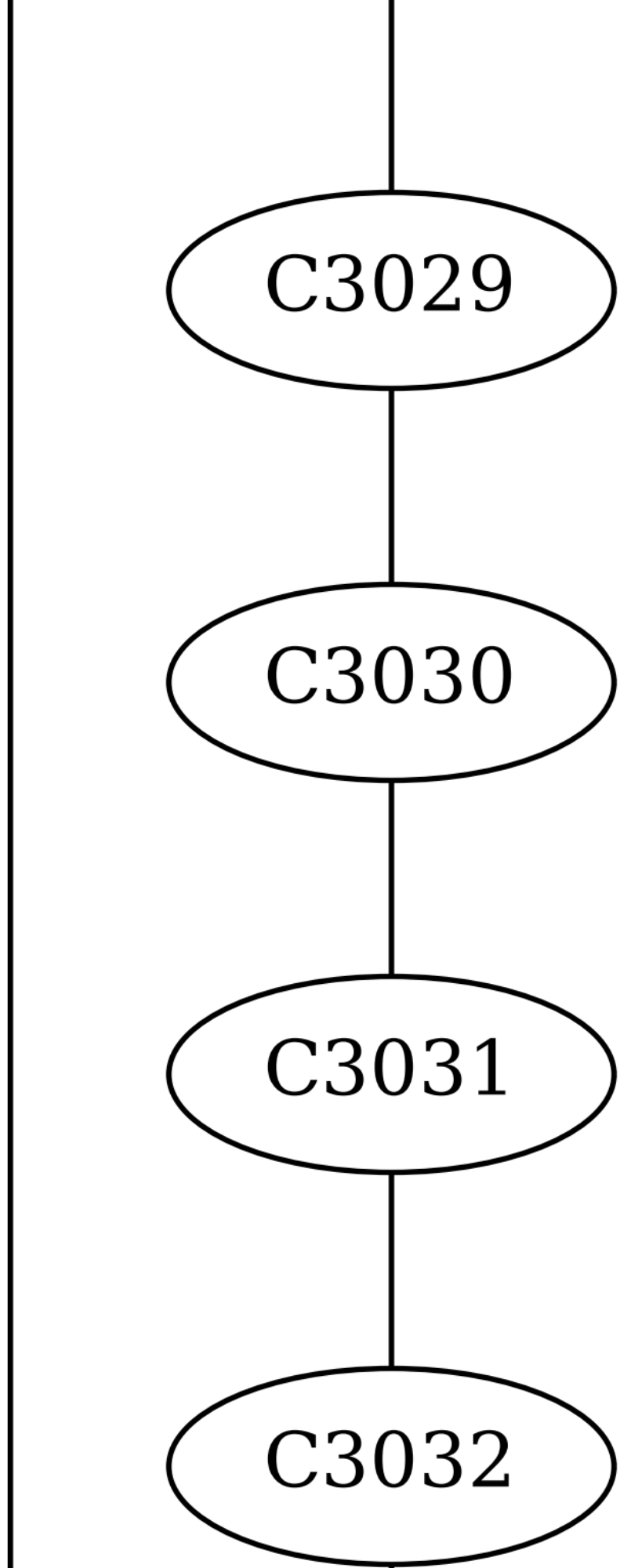
C3029
C3030
C3031
C3032

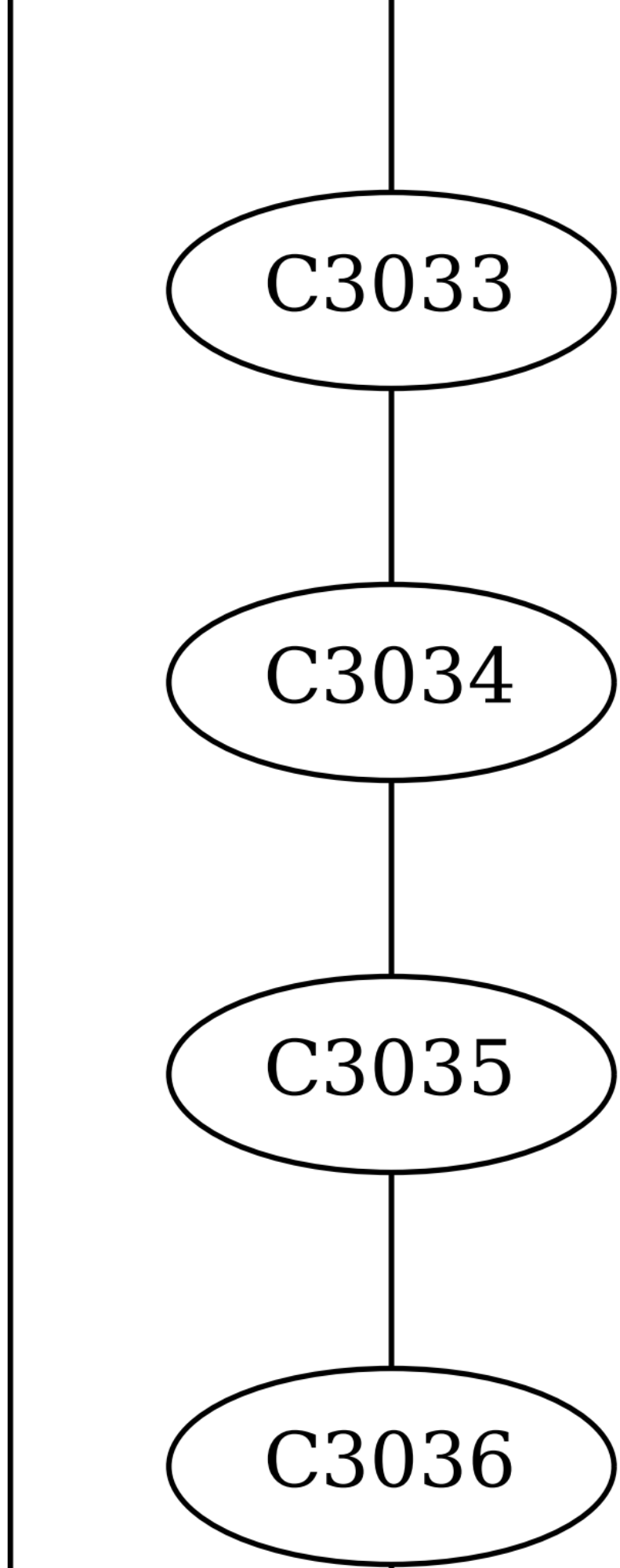
C3033
C3034
C3035
C3036

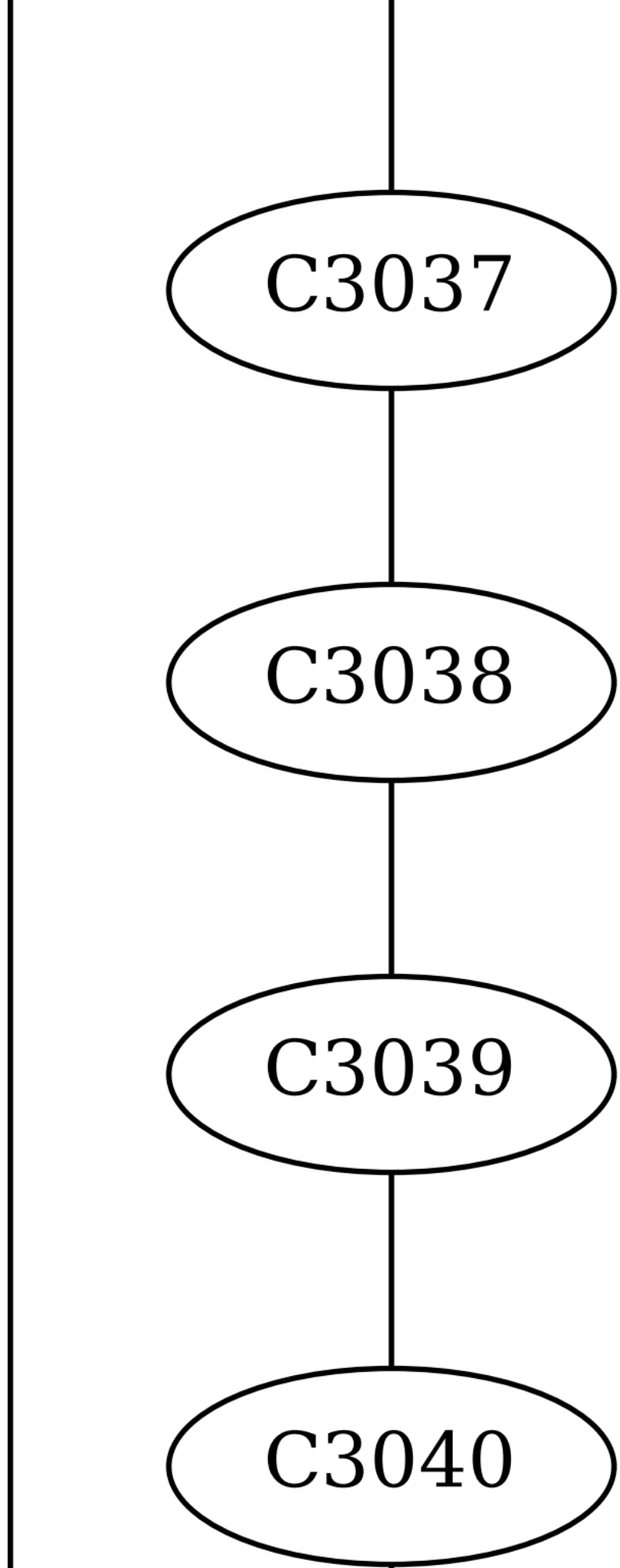
C3037
C3038
C3039
C3040

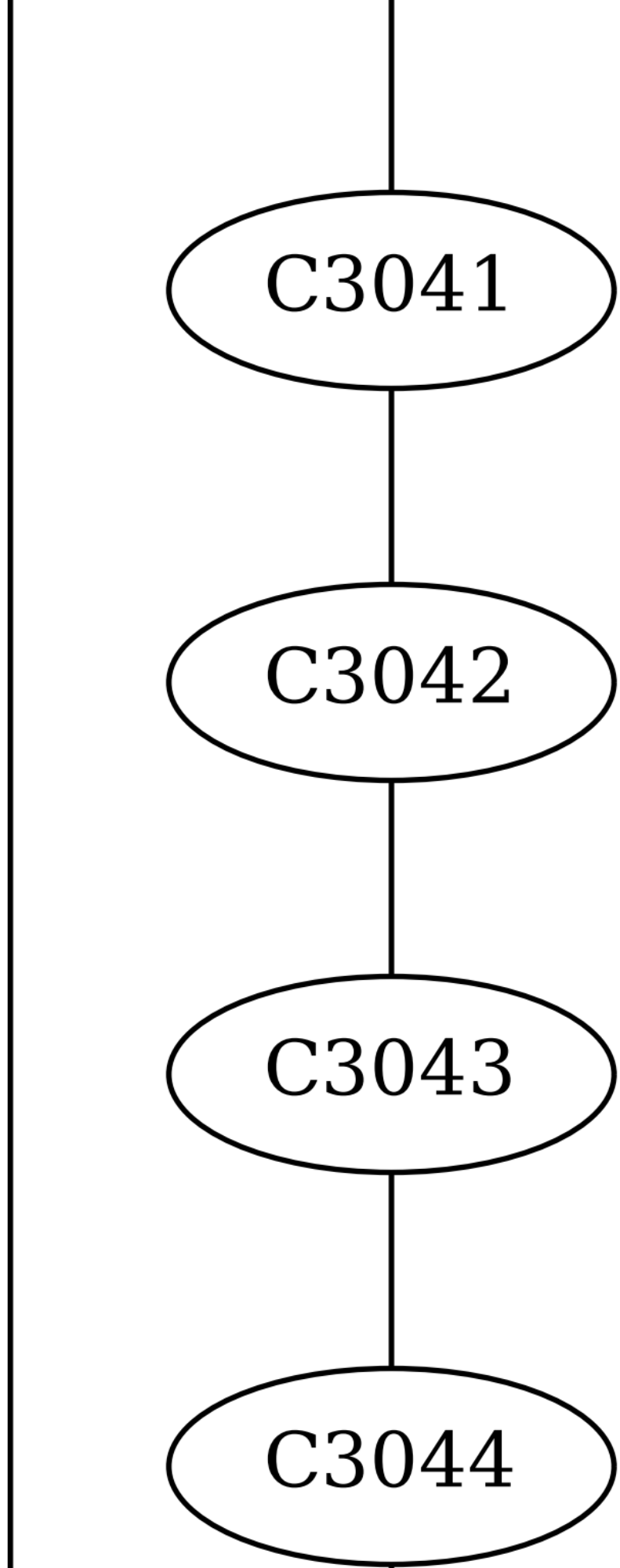
C3041
C3042
C3043
C3044

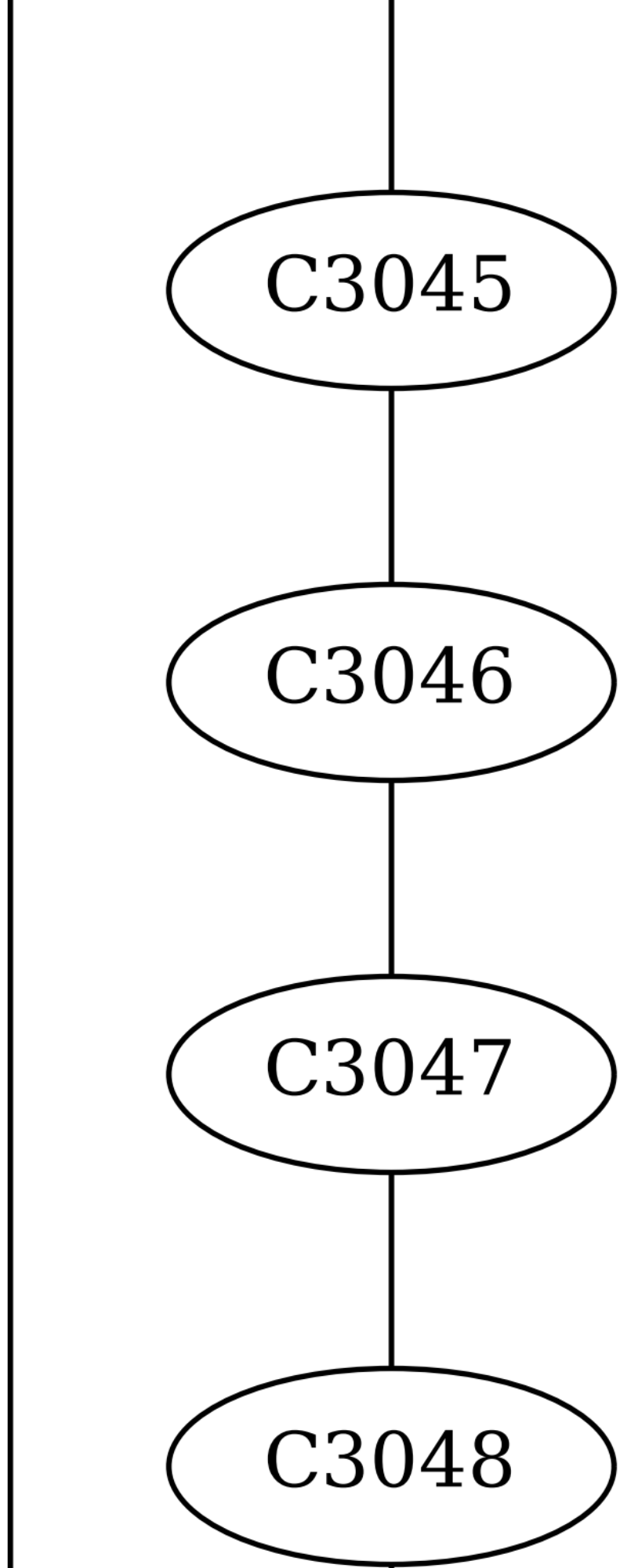
C3045
C3046
C3047
C3048

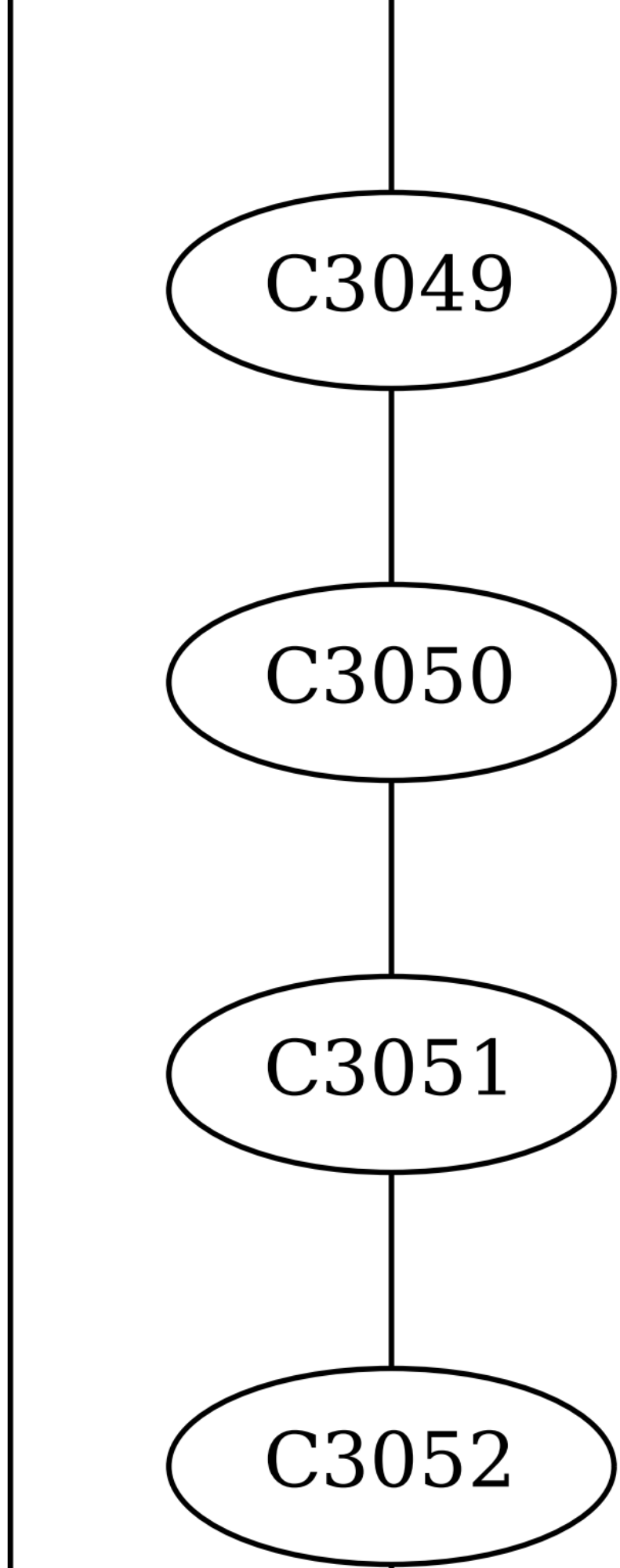
C3049
C3050
C3051
C3052

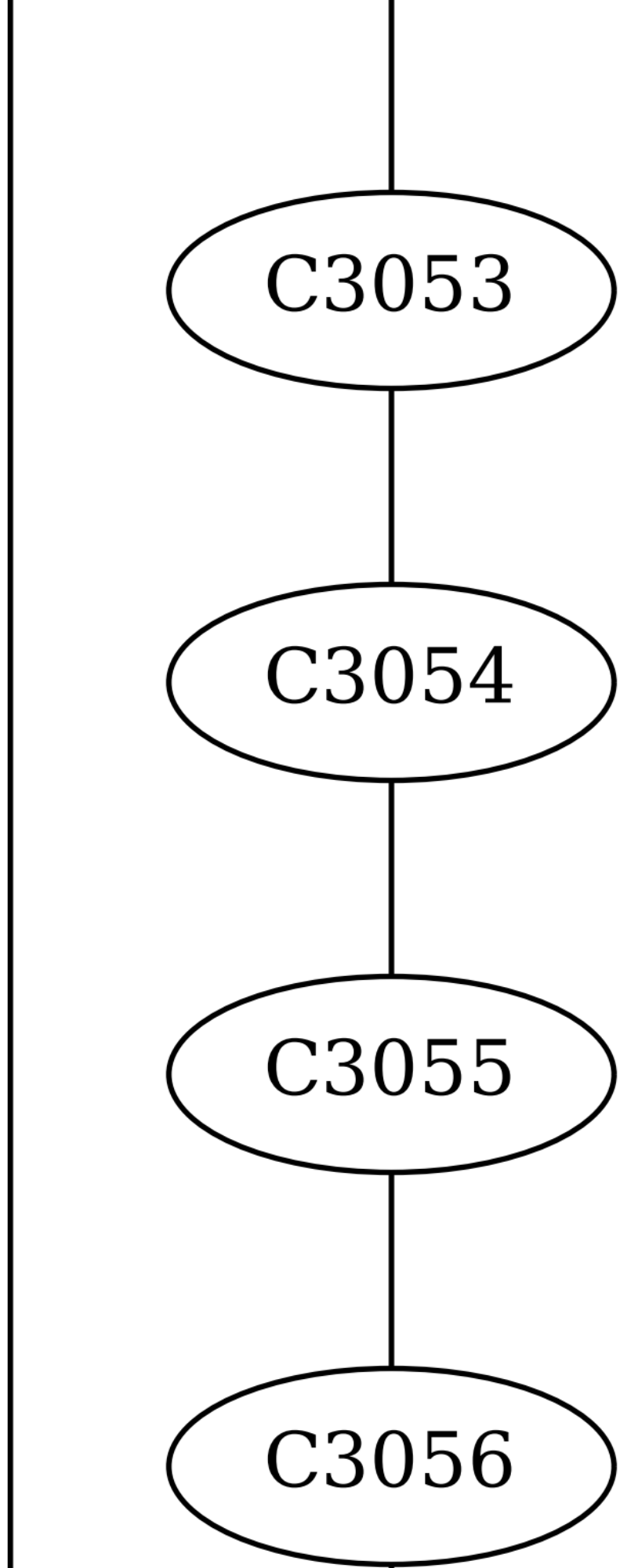
C3053
C3054
C3055
C3056

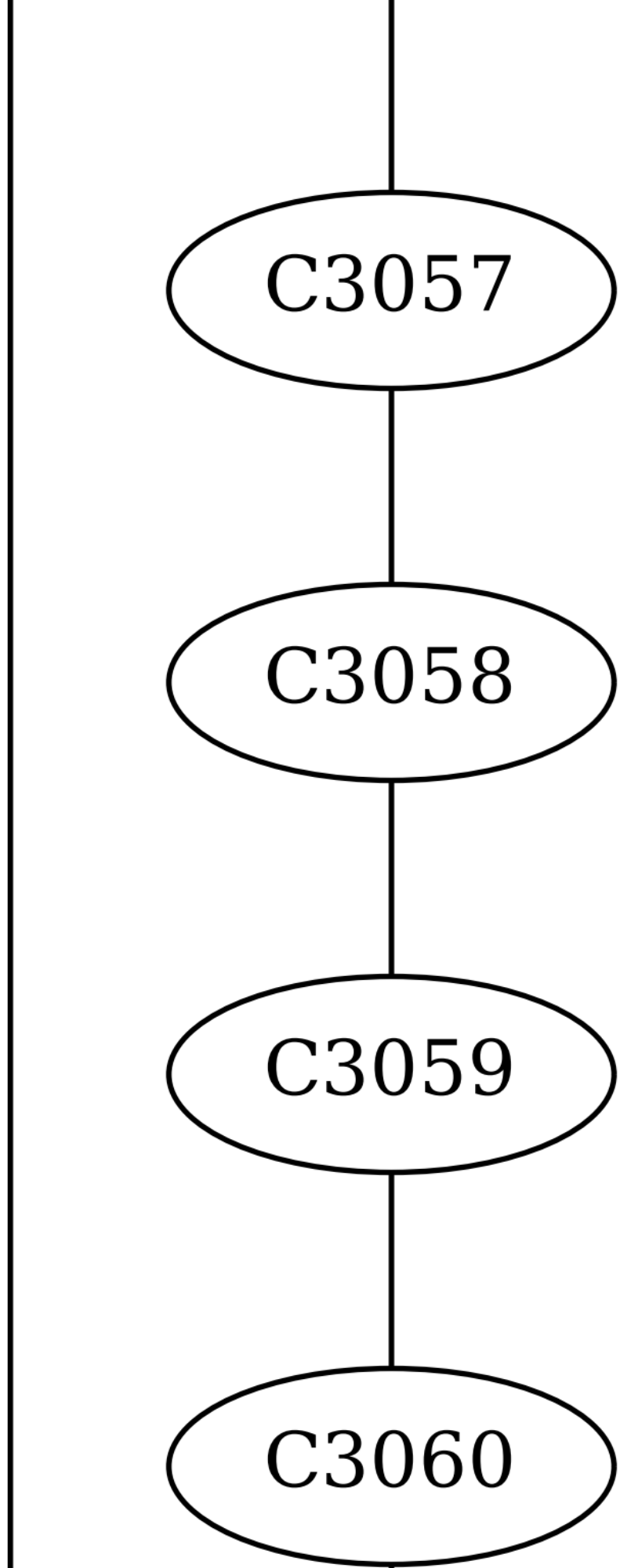
C3057
C3058
C3059
C3060

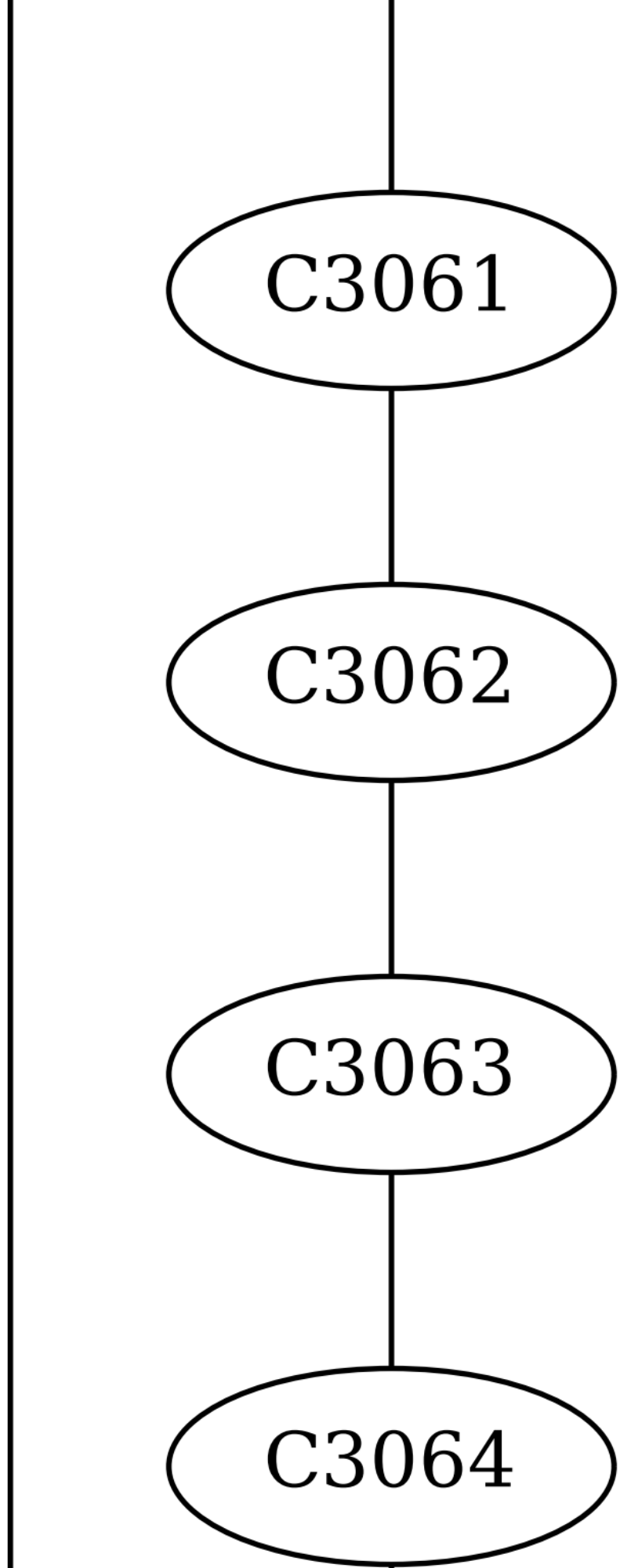
C3061
C3062
C3063
C3064

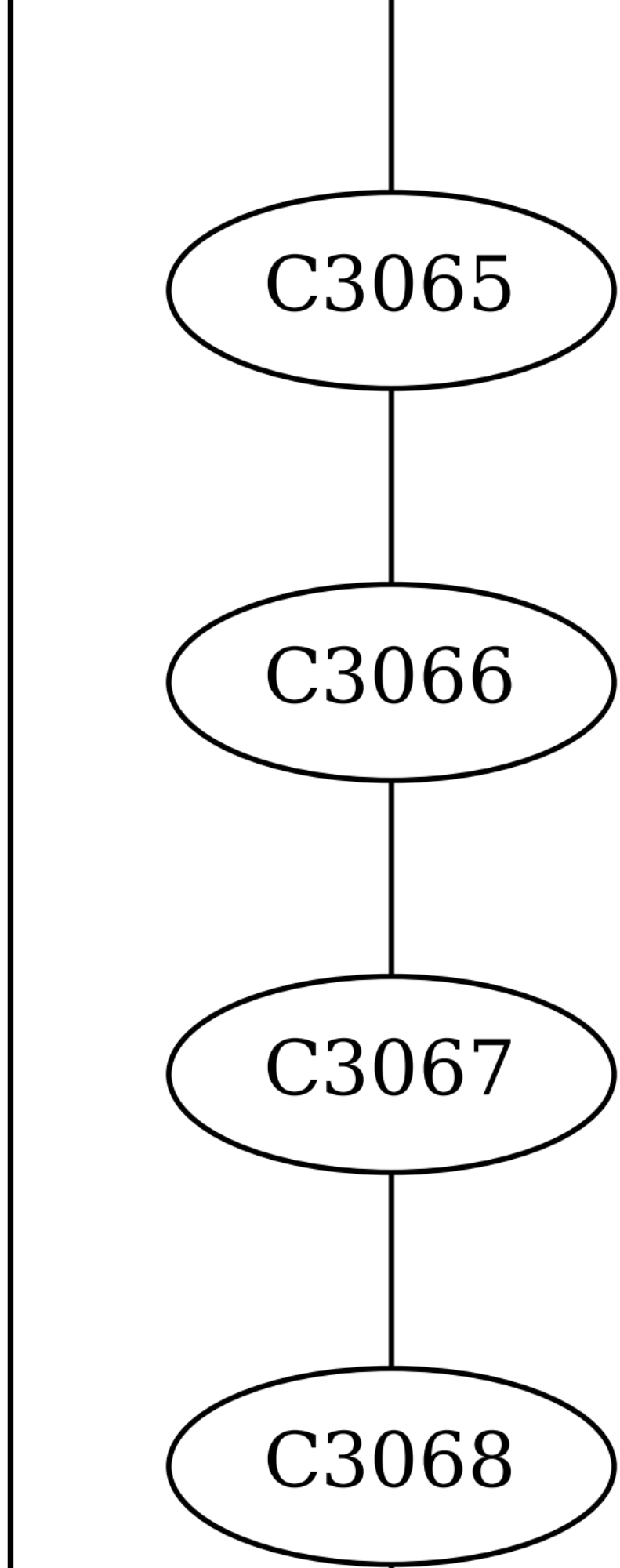
C3065
C3066
C3067
C3068

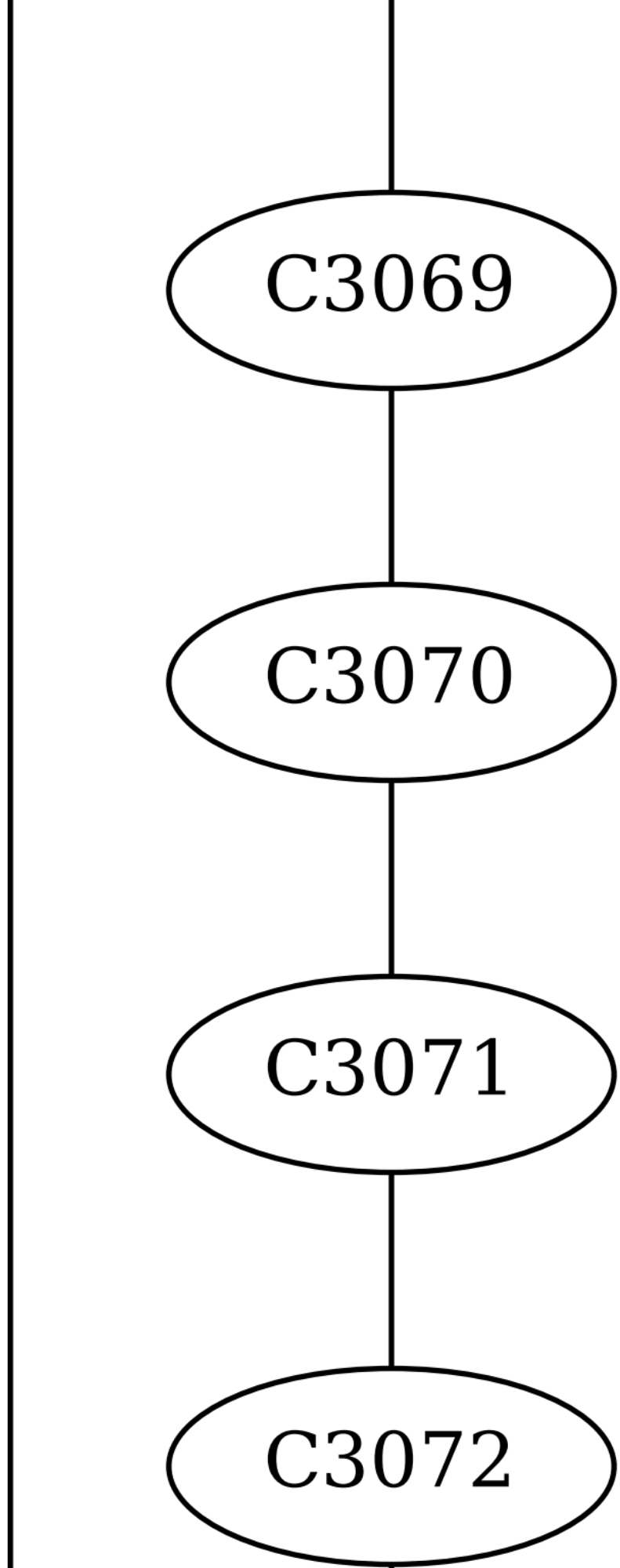
C3069
C3070
C3071
C3072

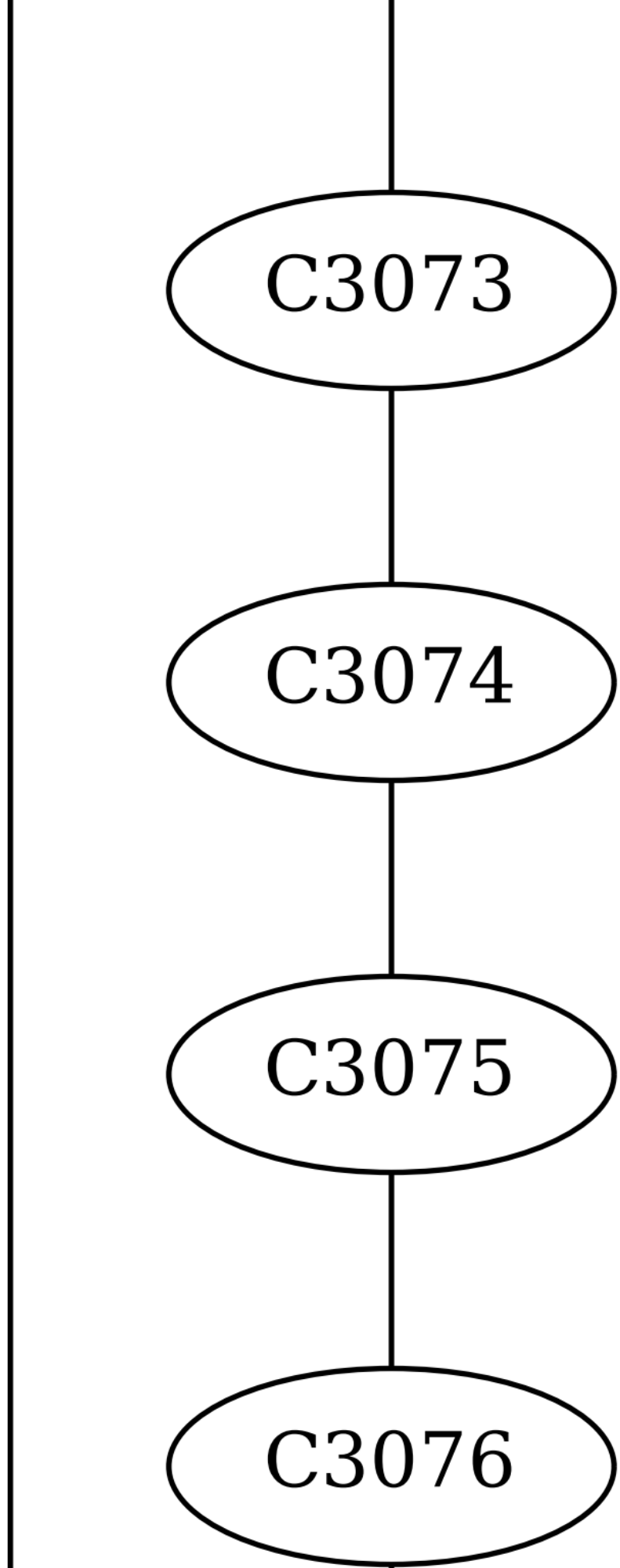
C3073
C3074
C3075
C3076

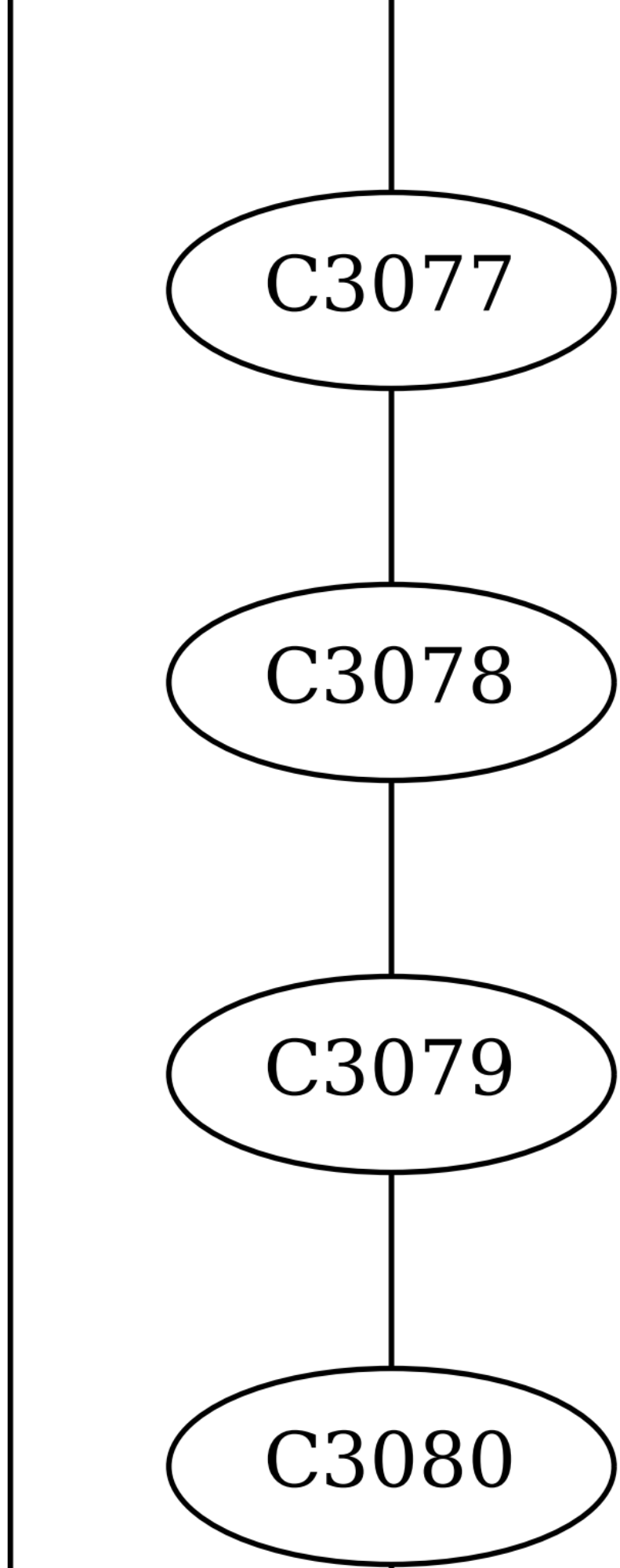
C3077
C3078
C3079
C3080

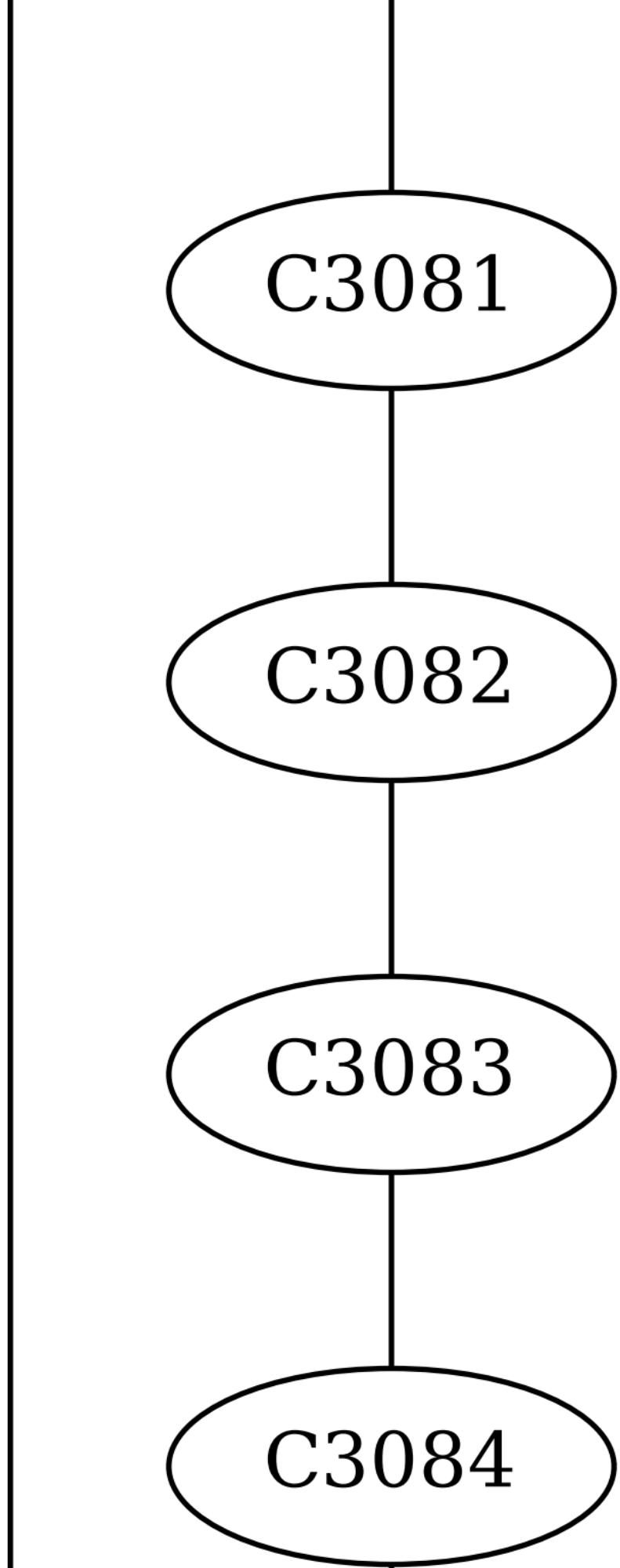
C3081
C3082
C3083
C3084

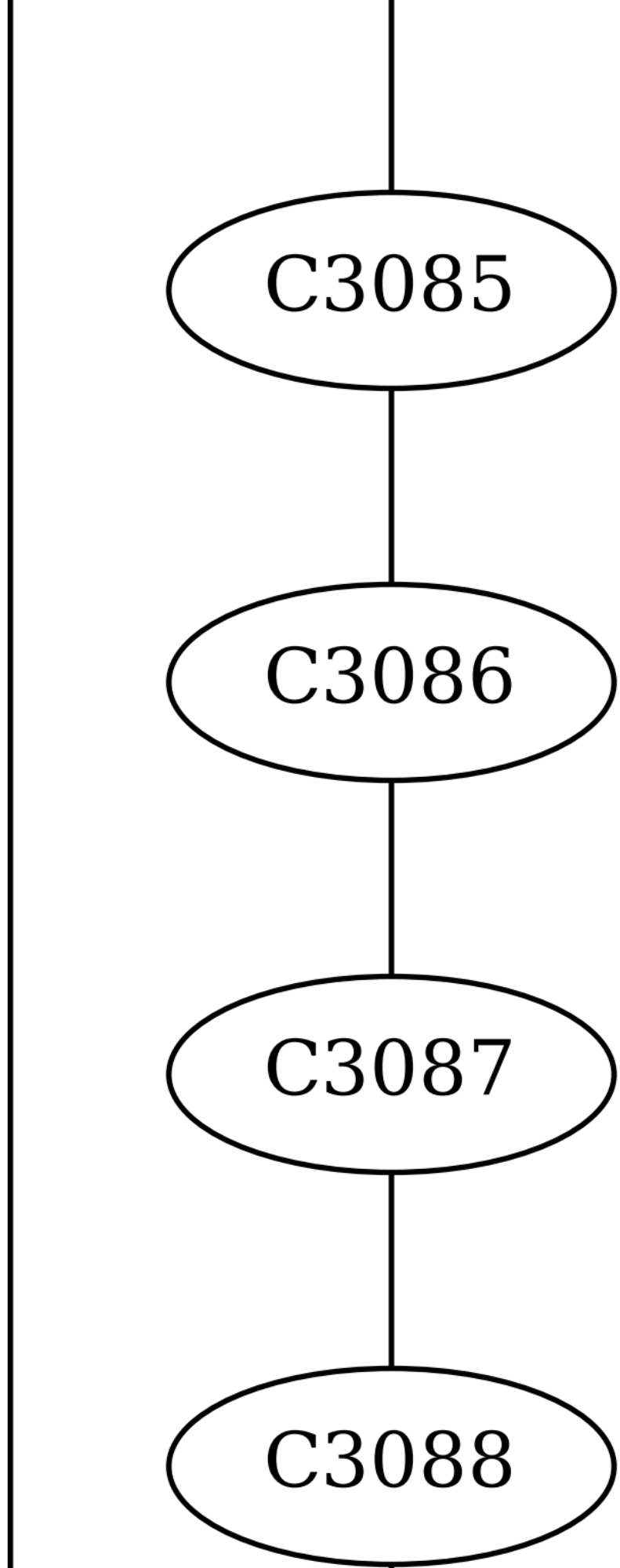
C3085
C3086
C3087
C3088

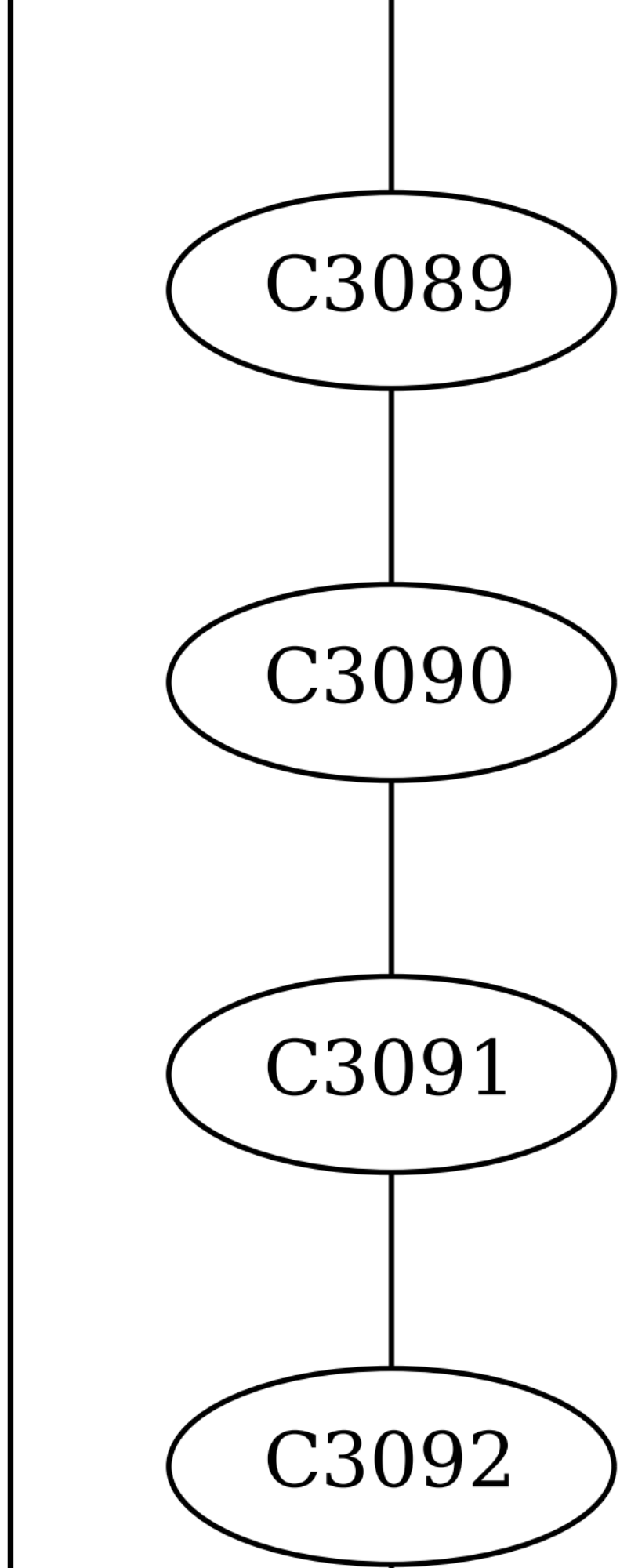
C3089
C3090
C3091
C3092

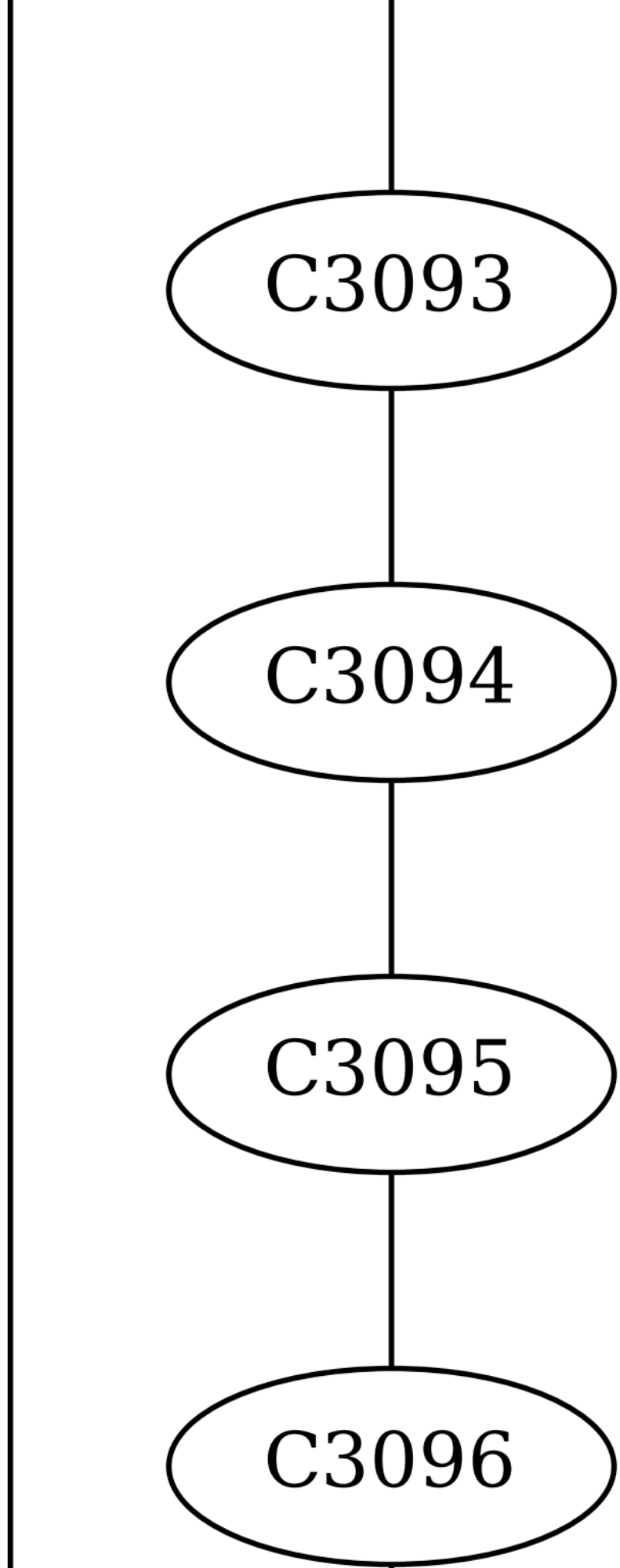
C3093
C3094
C3095
C3096

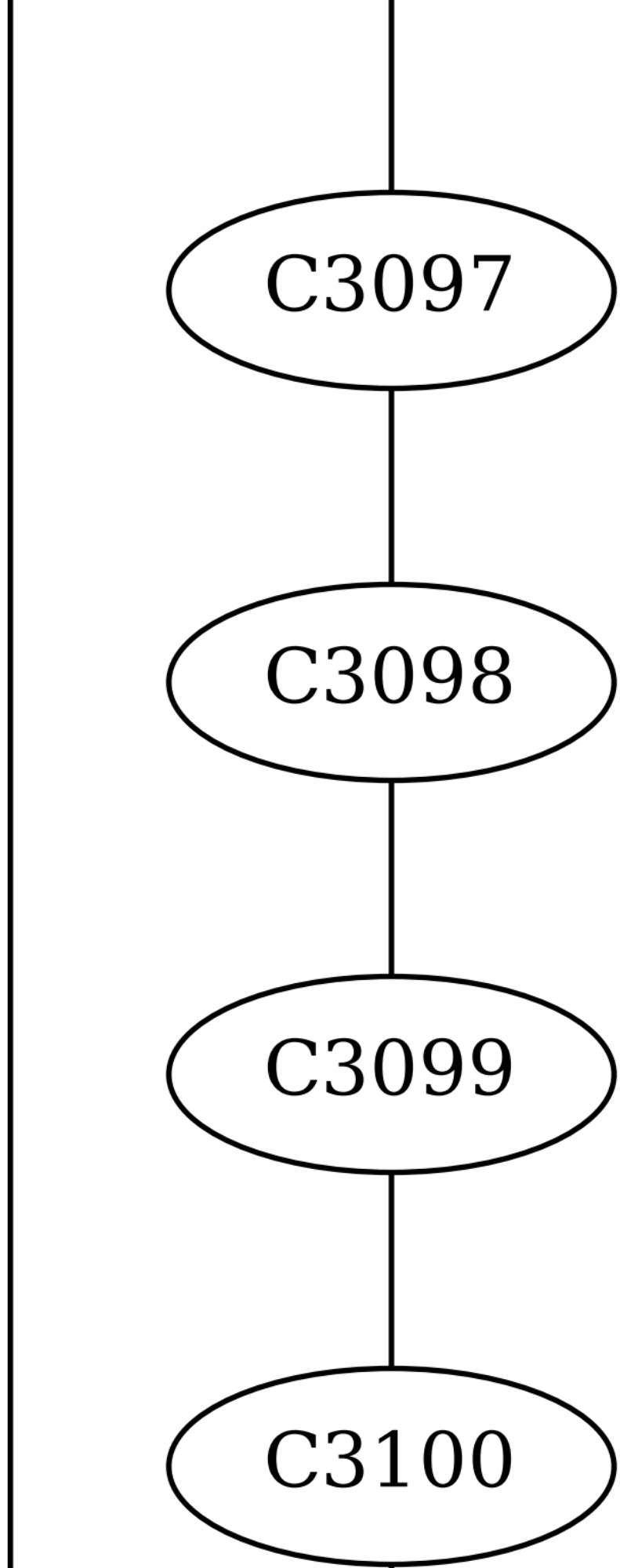
C3097
C3098
C3099
C3100

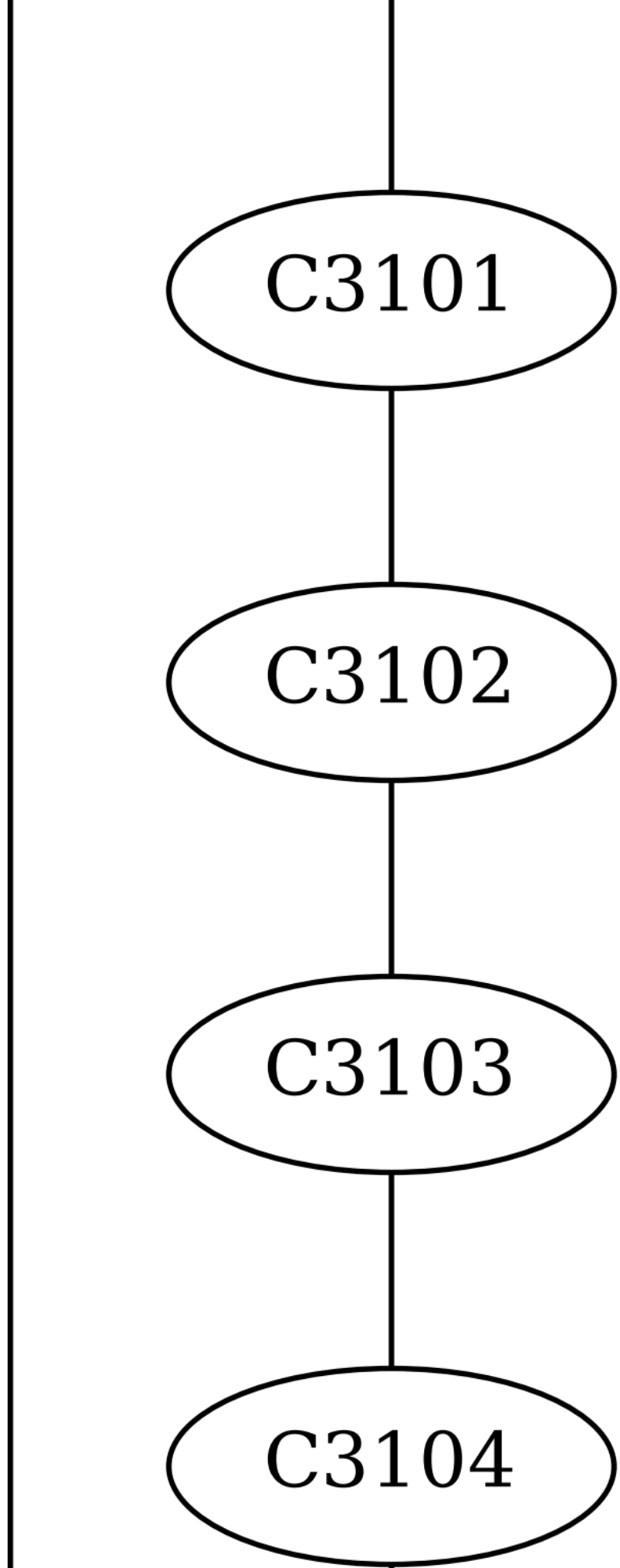
C3101
C3102
C3103
C3104

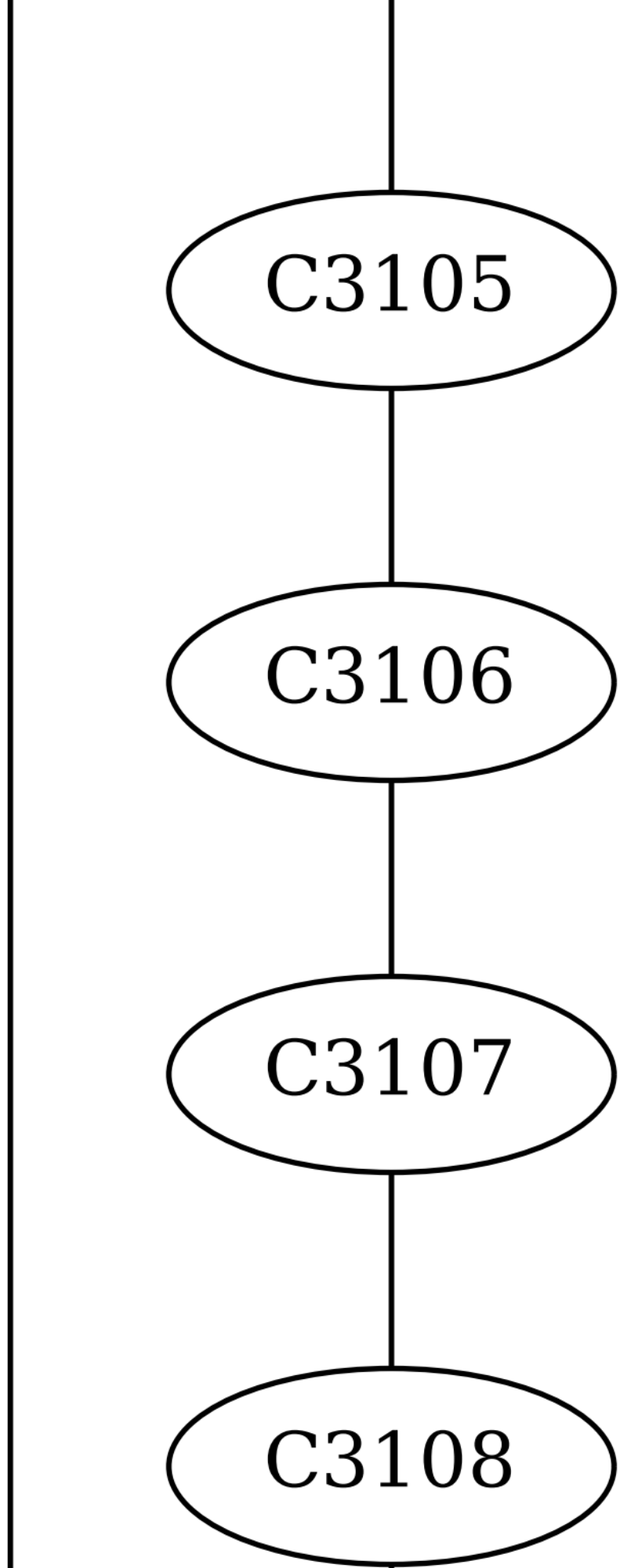
C3105
C3106
C3107
C3108

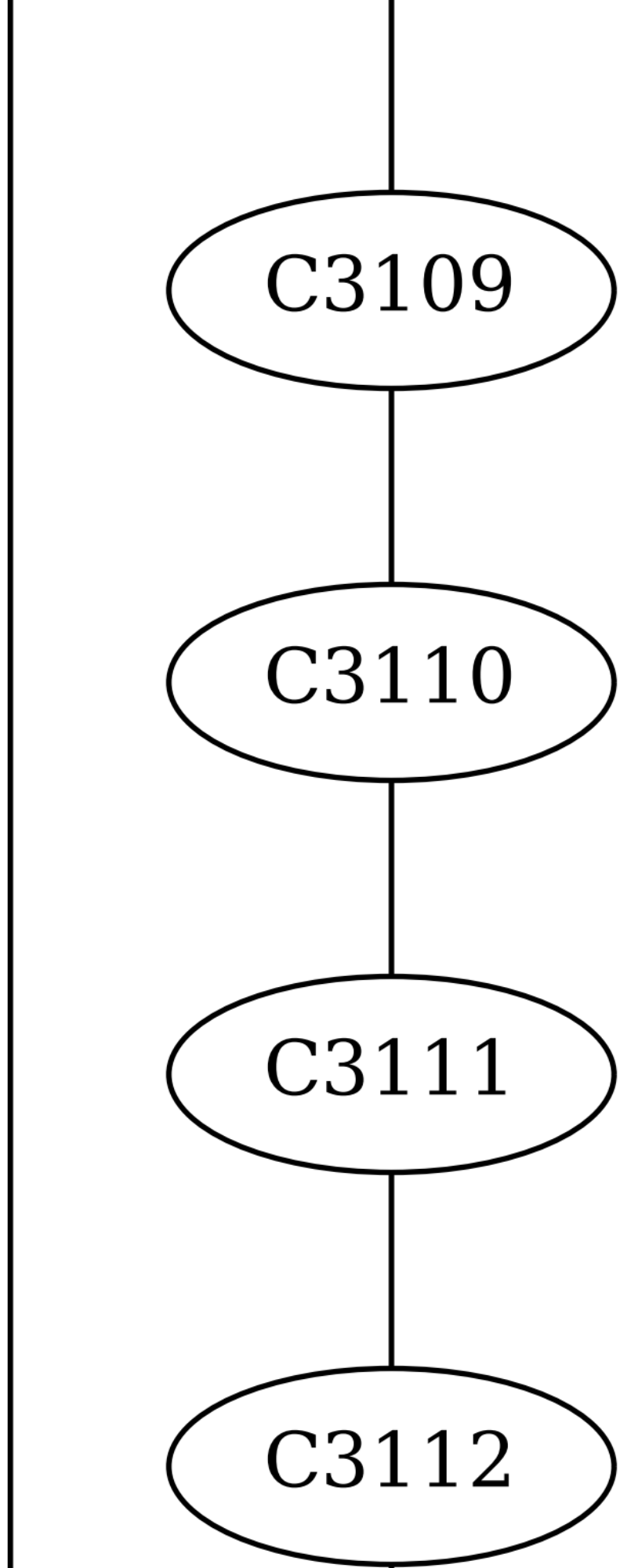
C3109
C3110
C3111
C3112

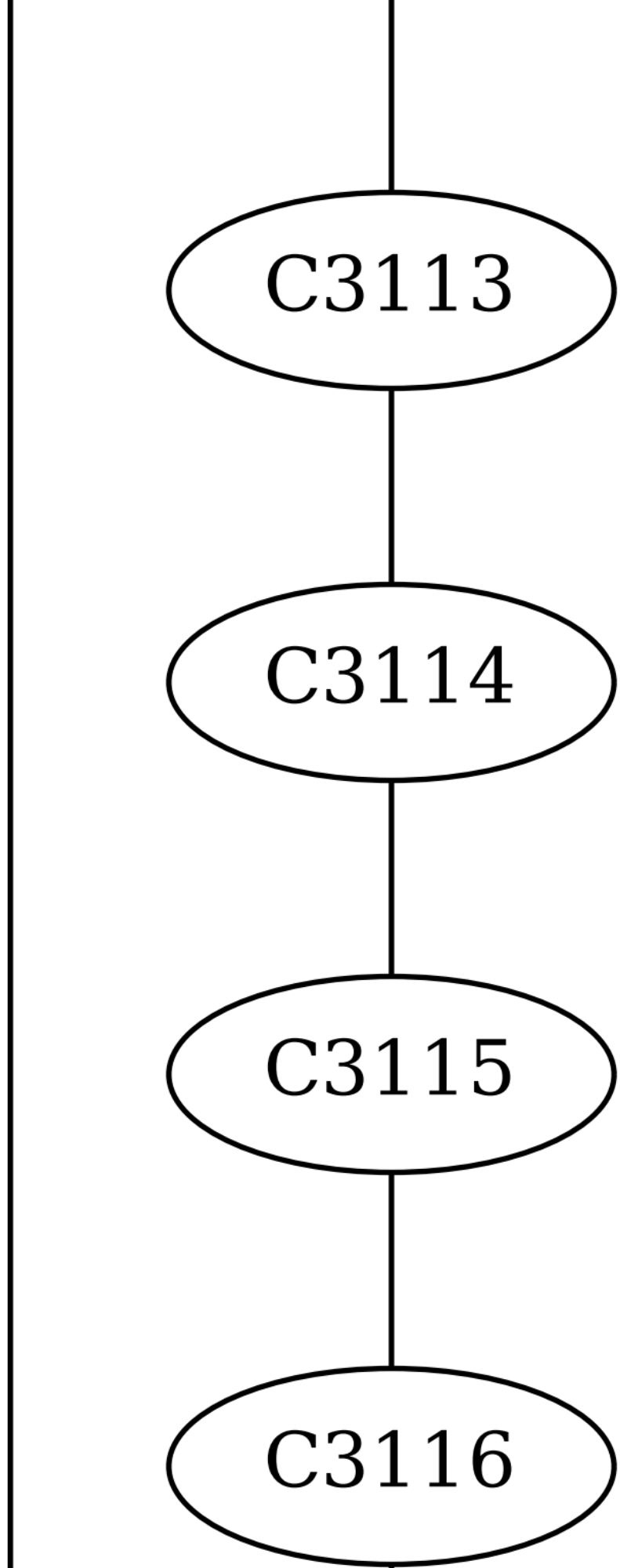
C3113
C3114
C3115
C3116

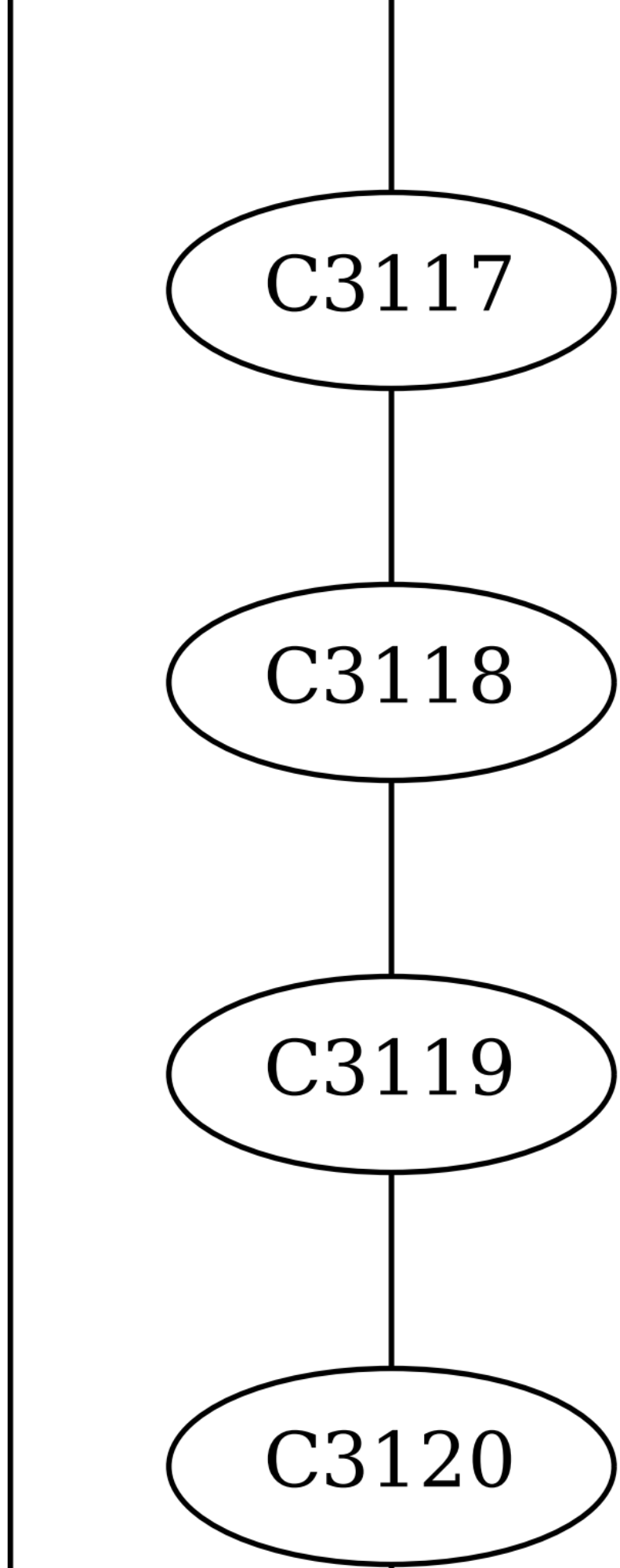
C3117
C3118
C3119
C3120

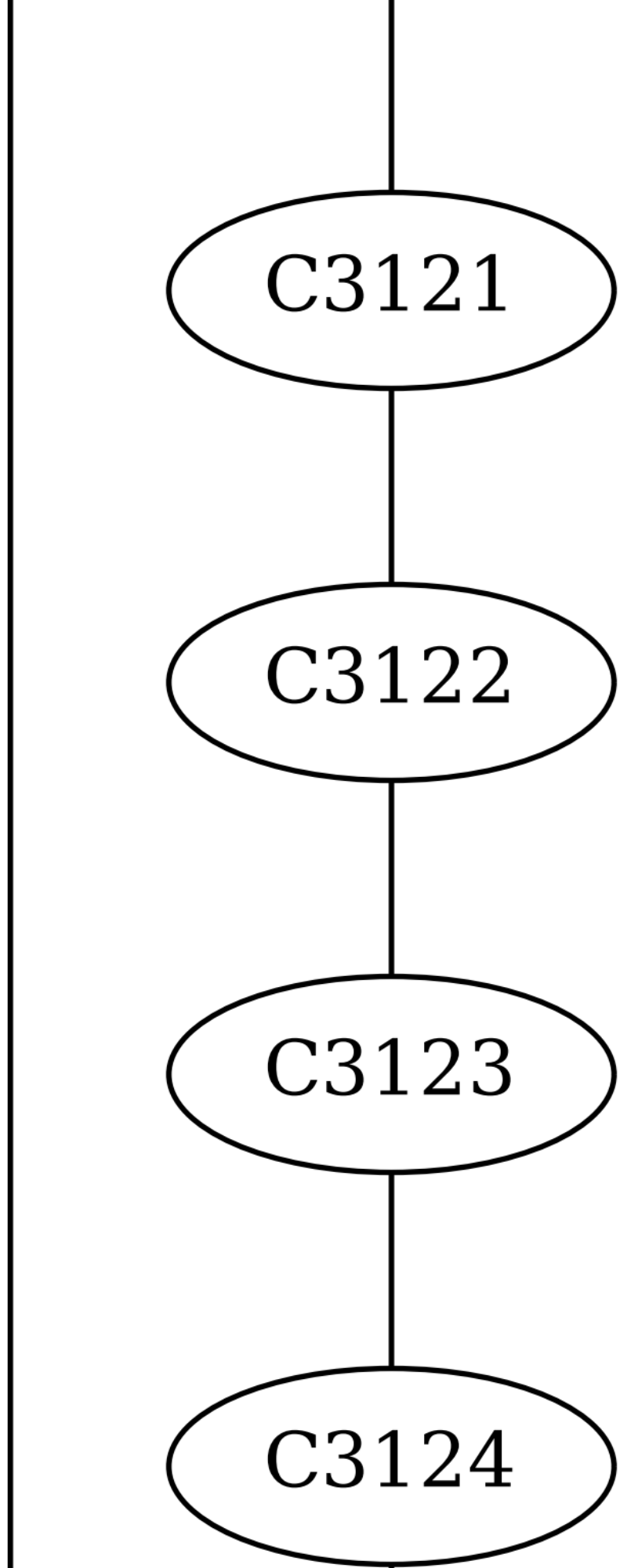
C3121
C3122
C3123
C3124

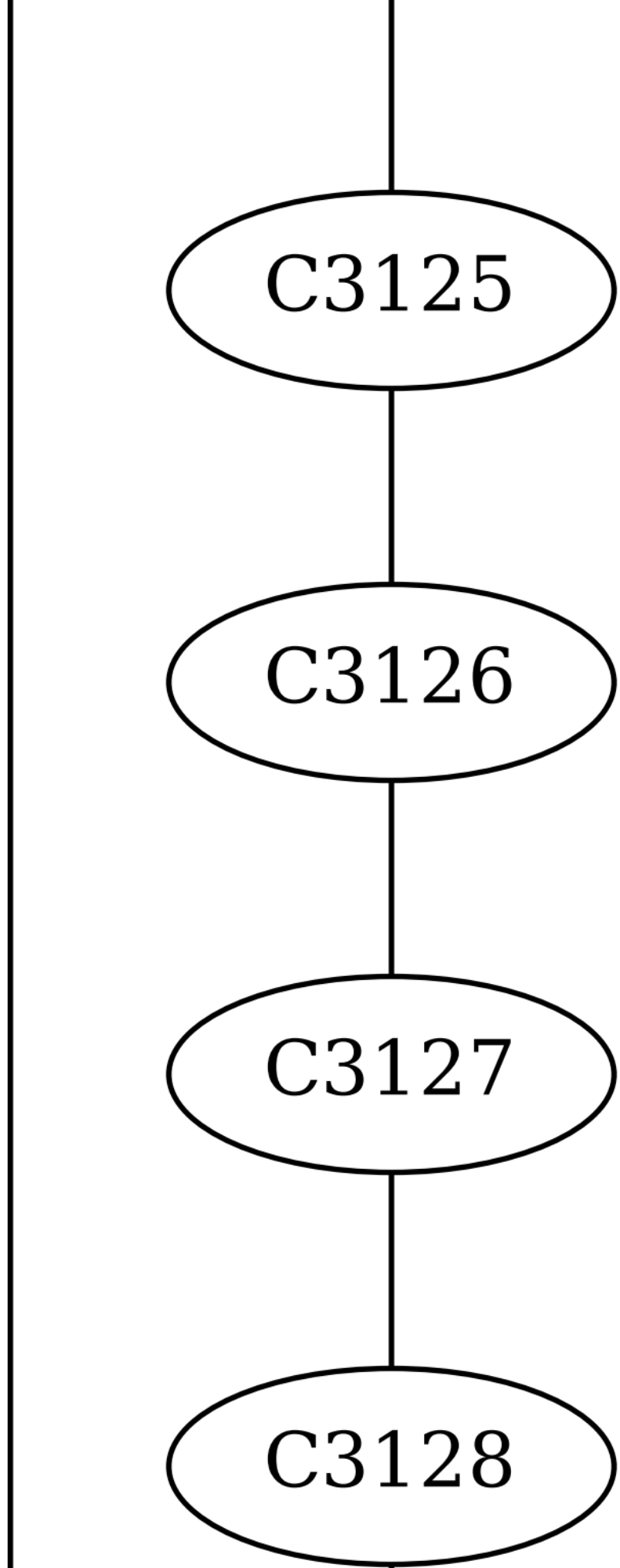
C3125
C3126
C3127
C3128

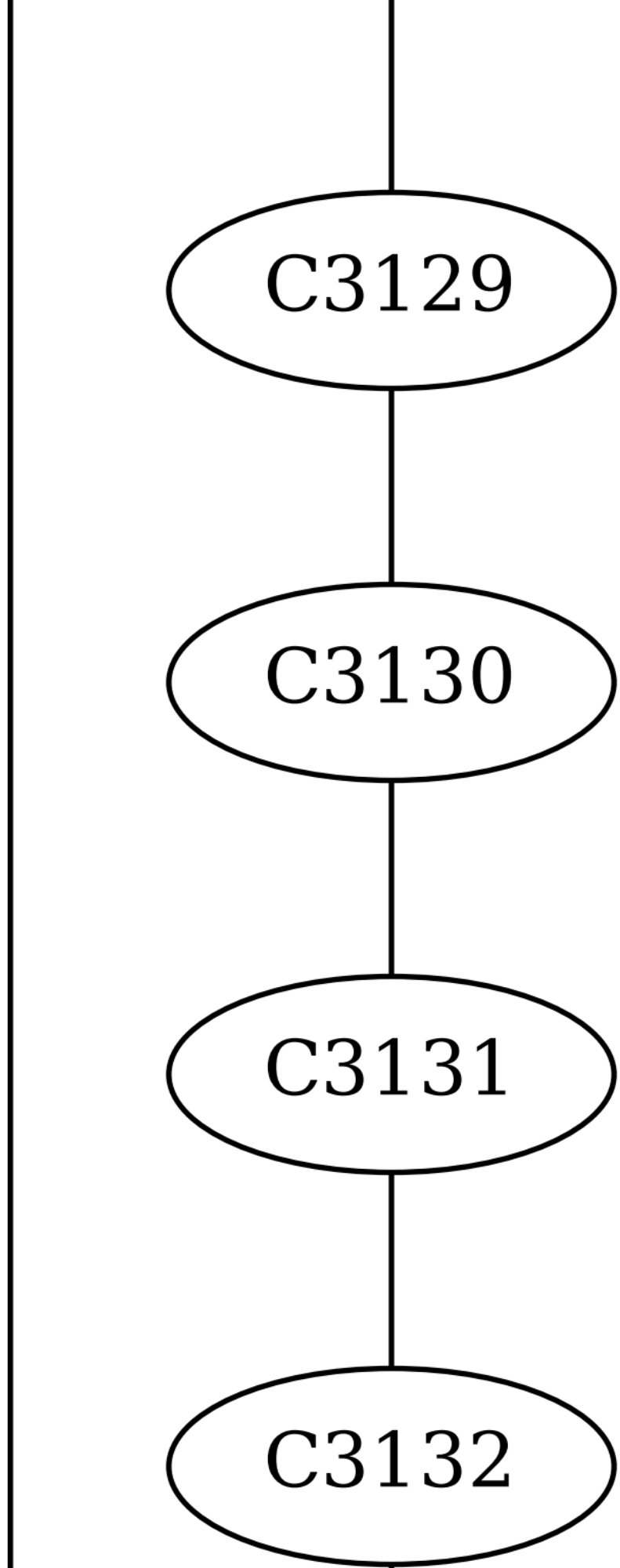
C3129
C3130
C3131
C3132

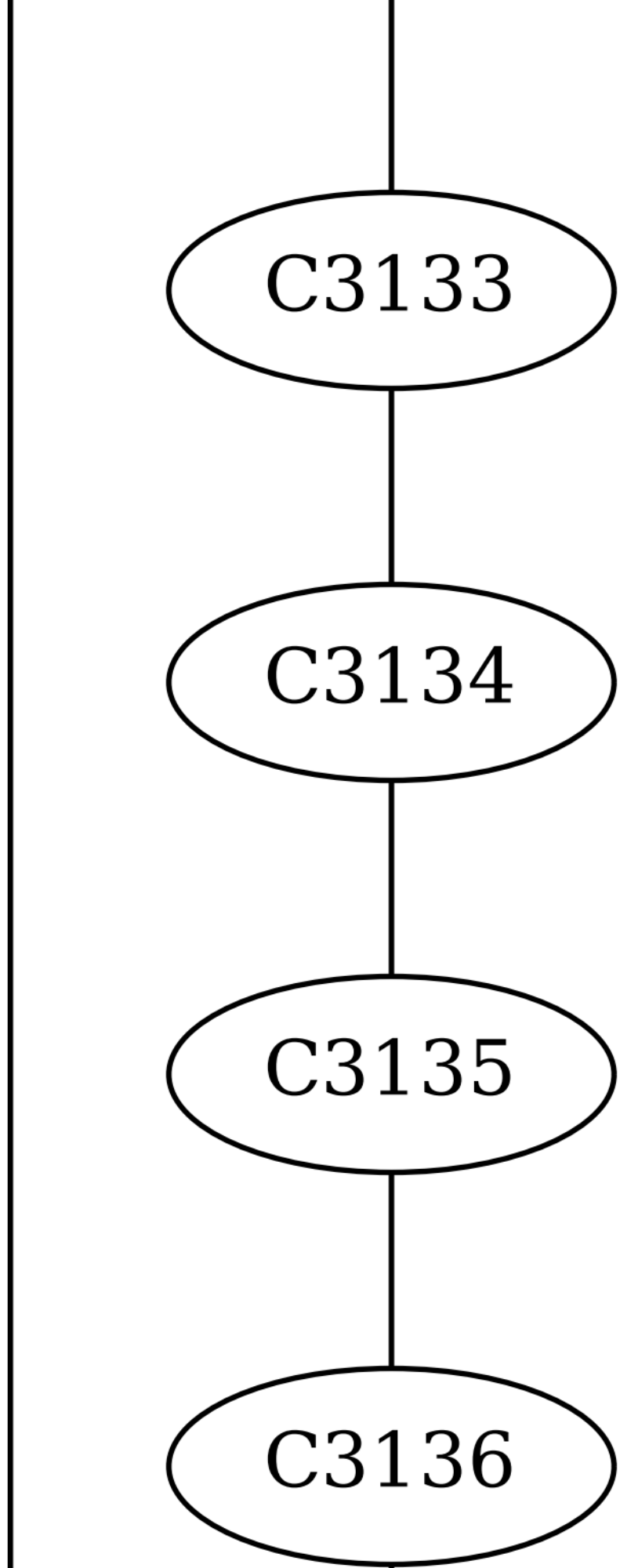
C3133
C3134
C3135
C3136

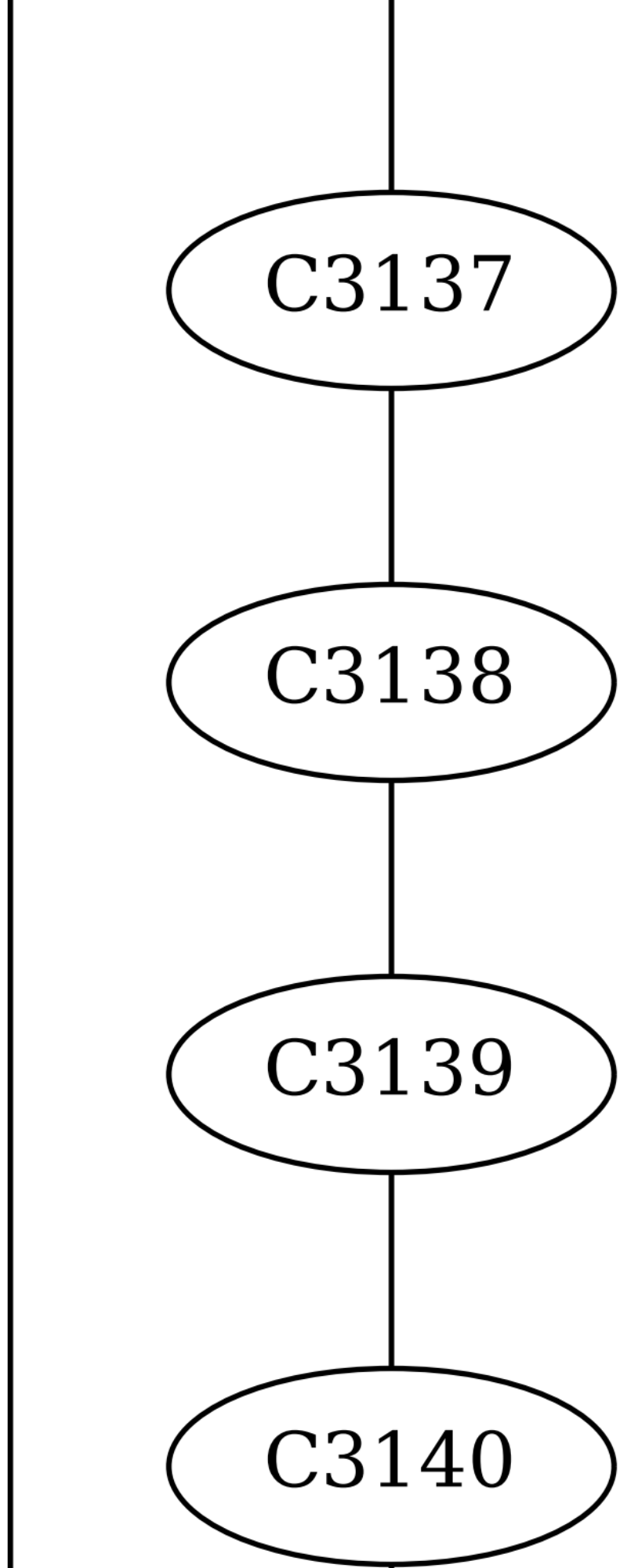
C3137
C3138
C3139
C3140

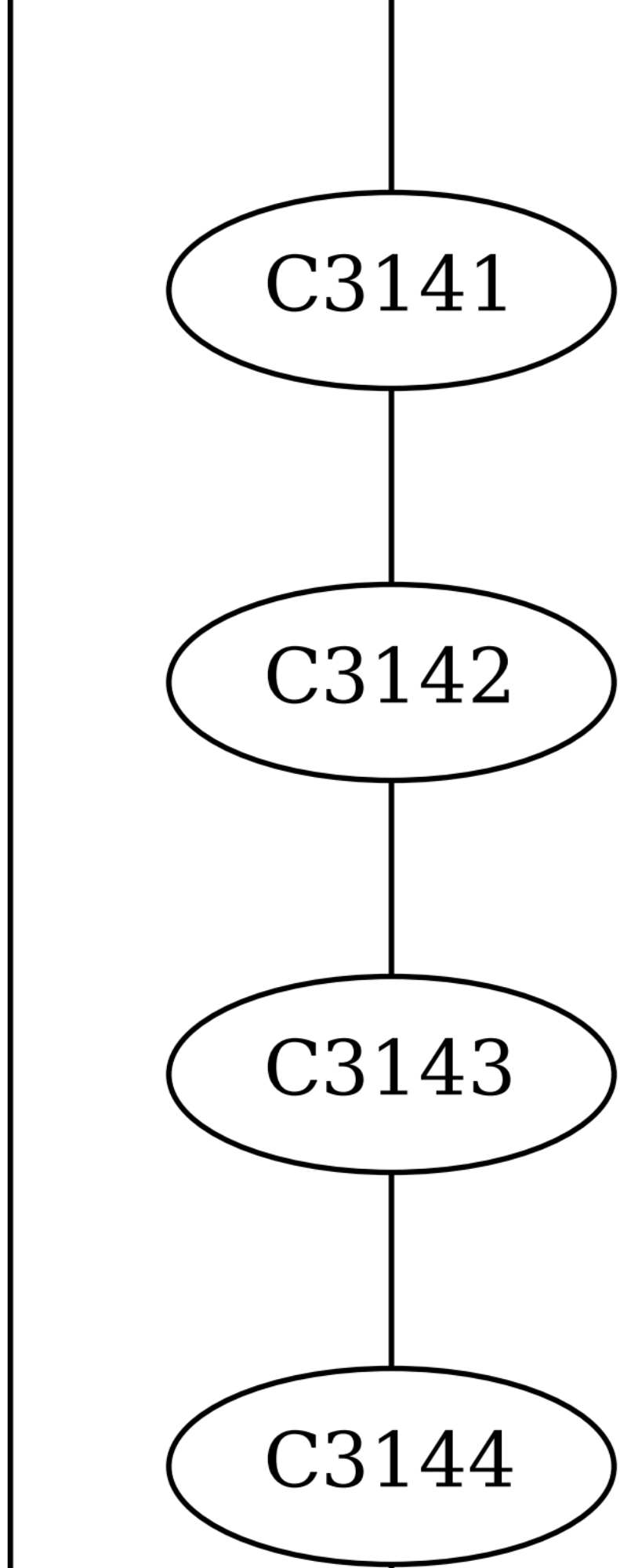
C3141
C3142
C3143
C3144

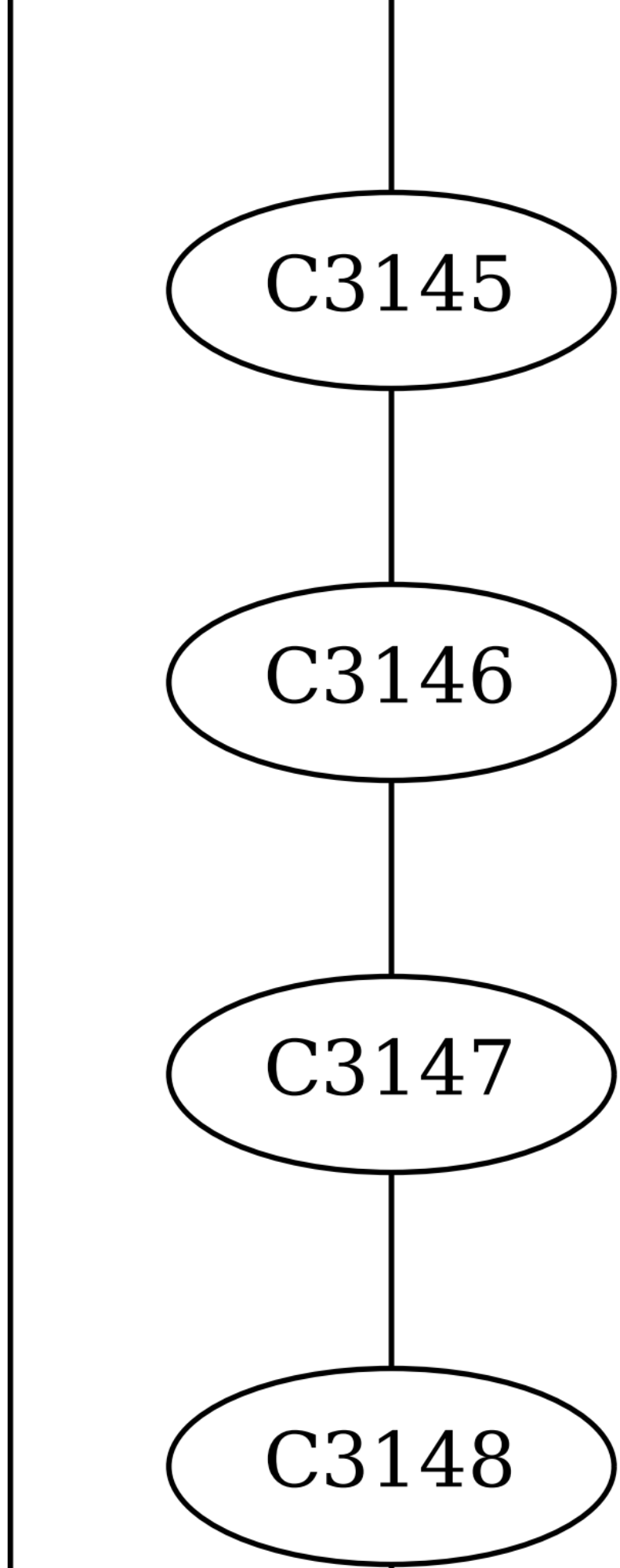
C3145
C3146
C3147
C3148

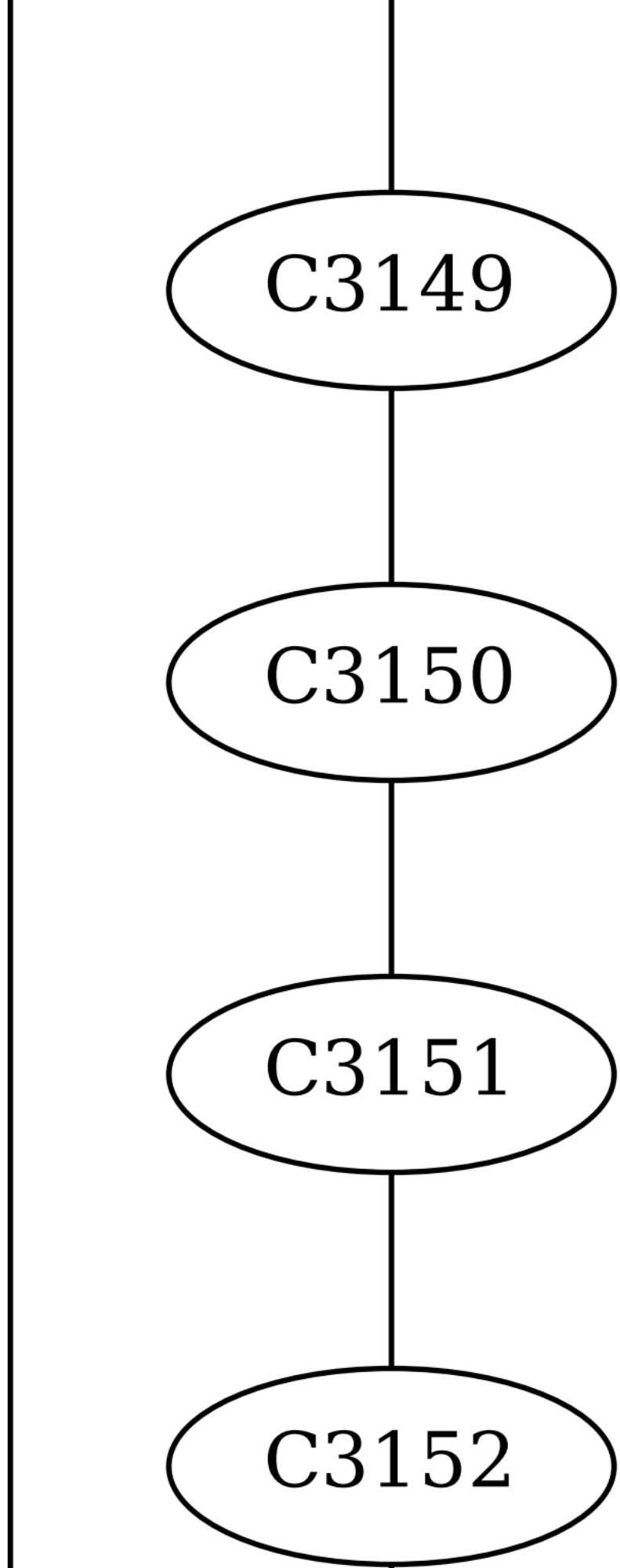
C3149
C3150
C3151
C3152

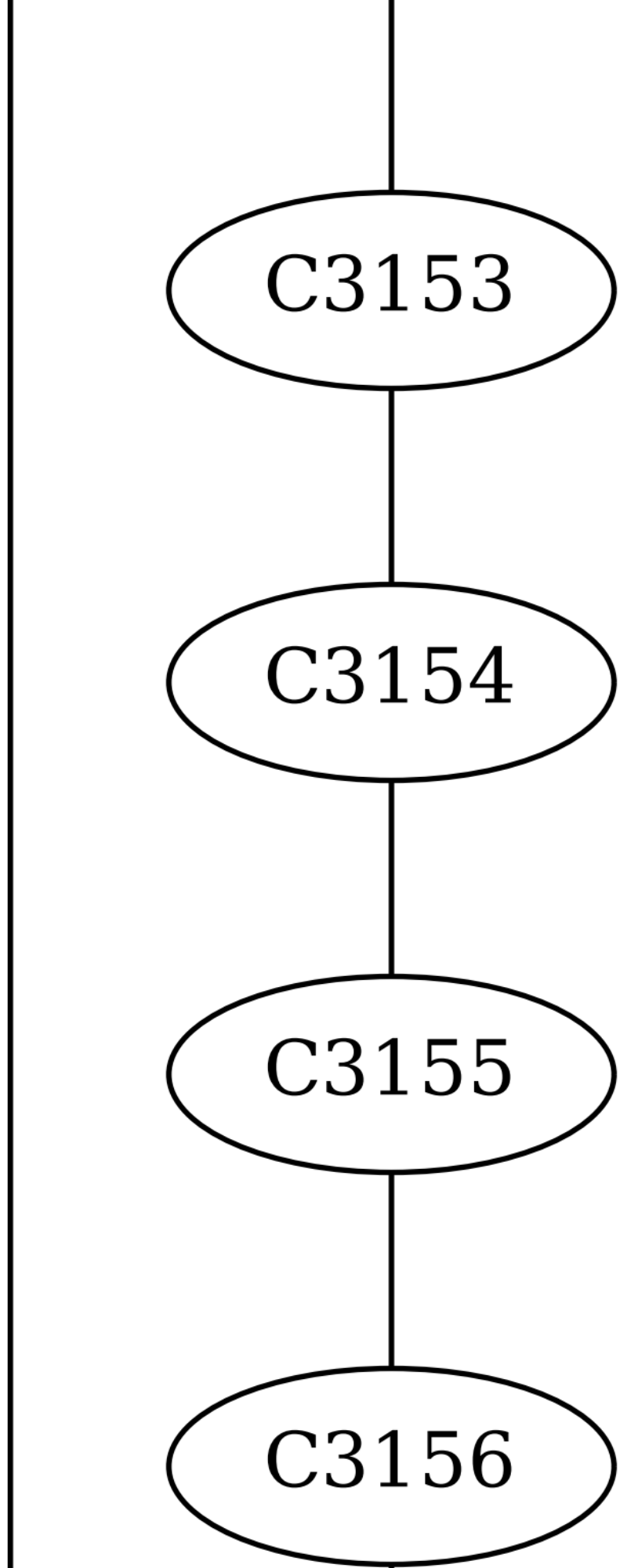
C3153
C3154
C3155
C3156

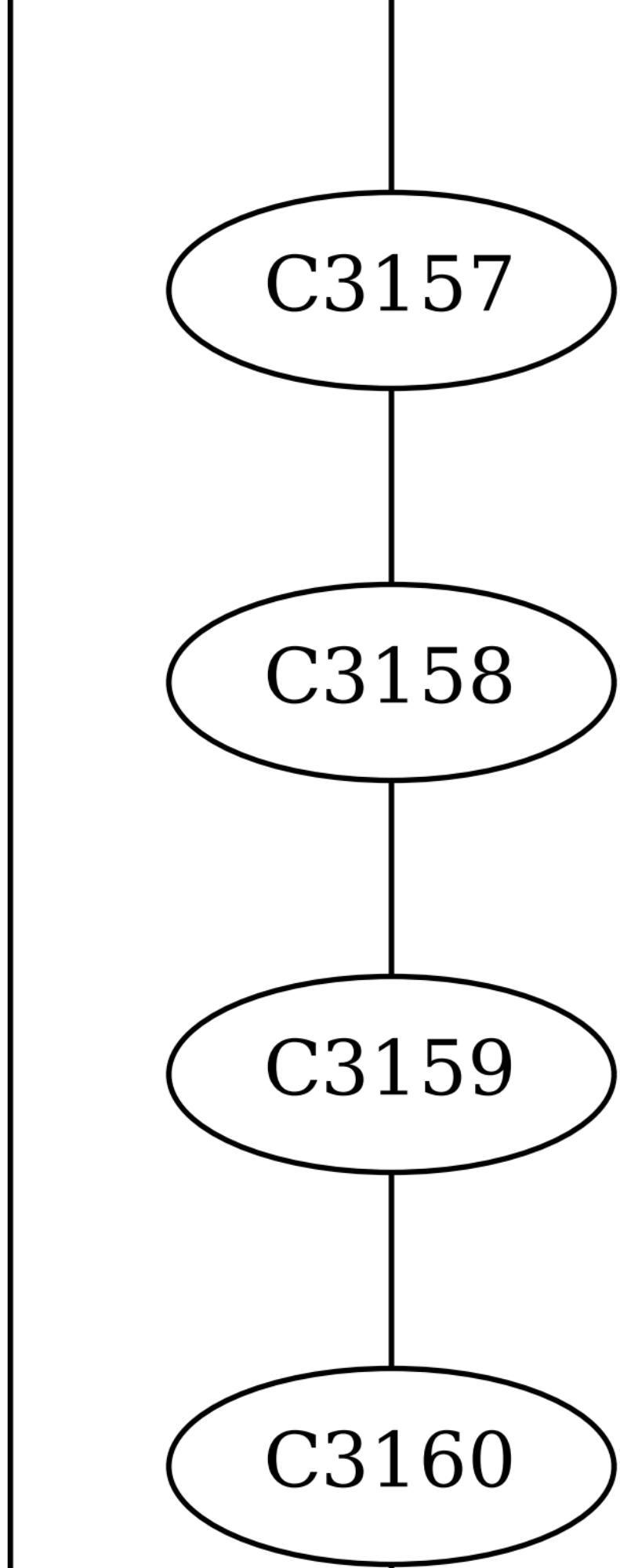
C3157
C3158
C3159
C3160

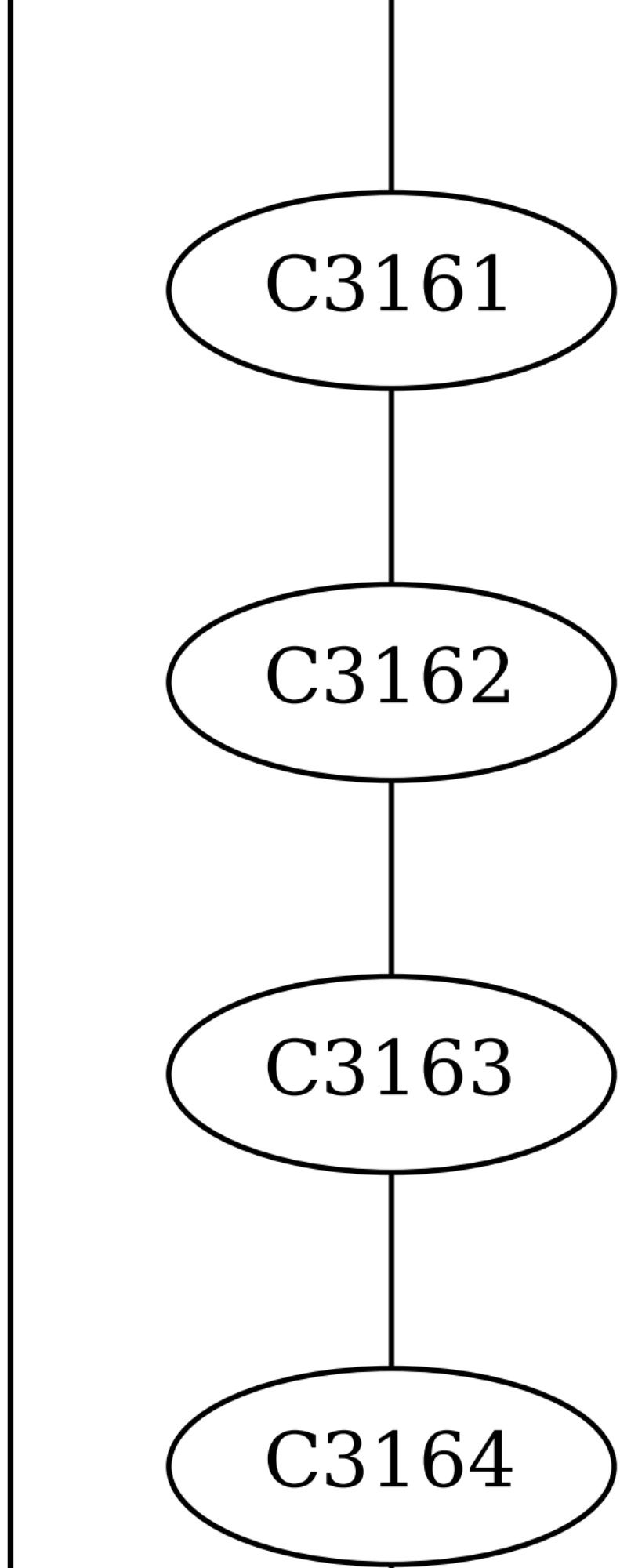
C3161
C3162
C3163
C3164

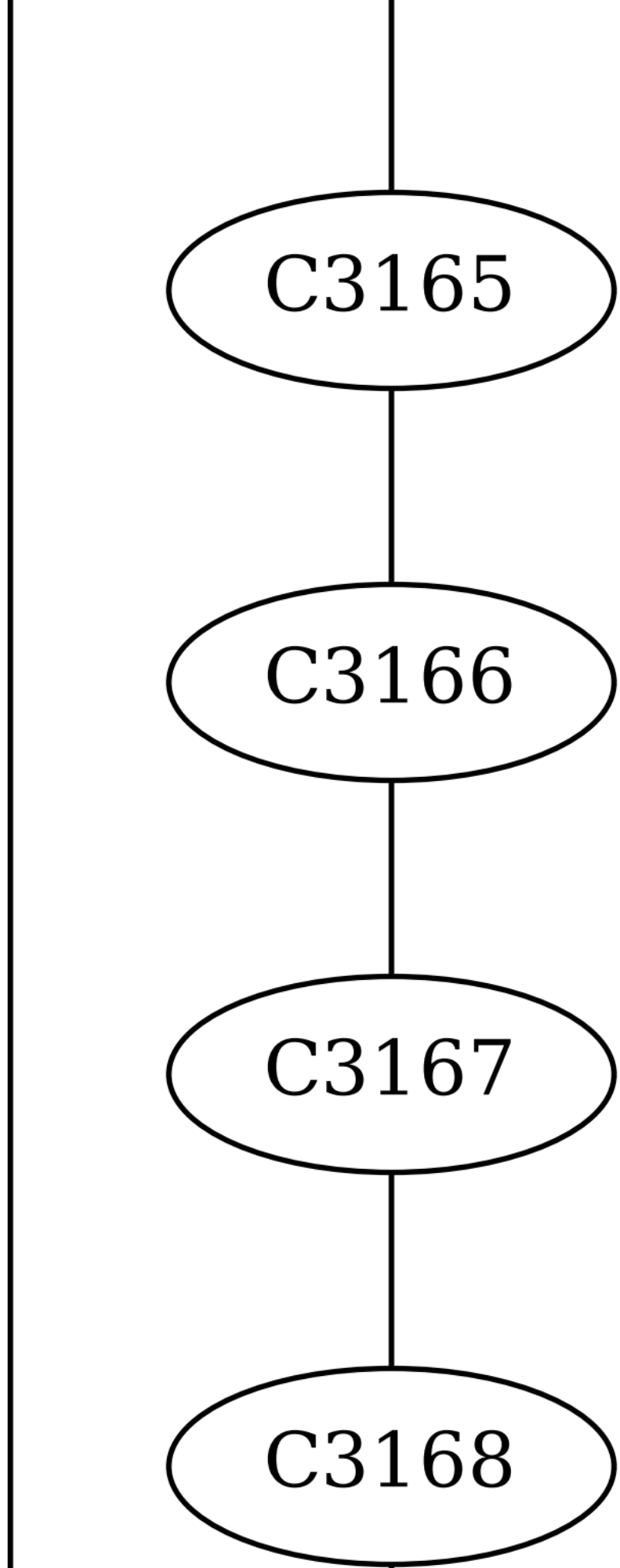
C3165
C3166
C3167
C3168

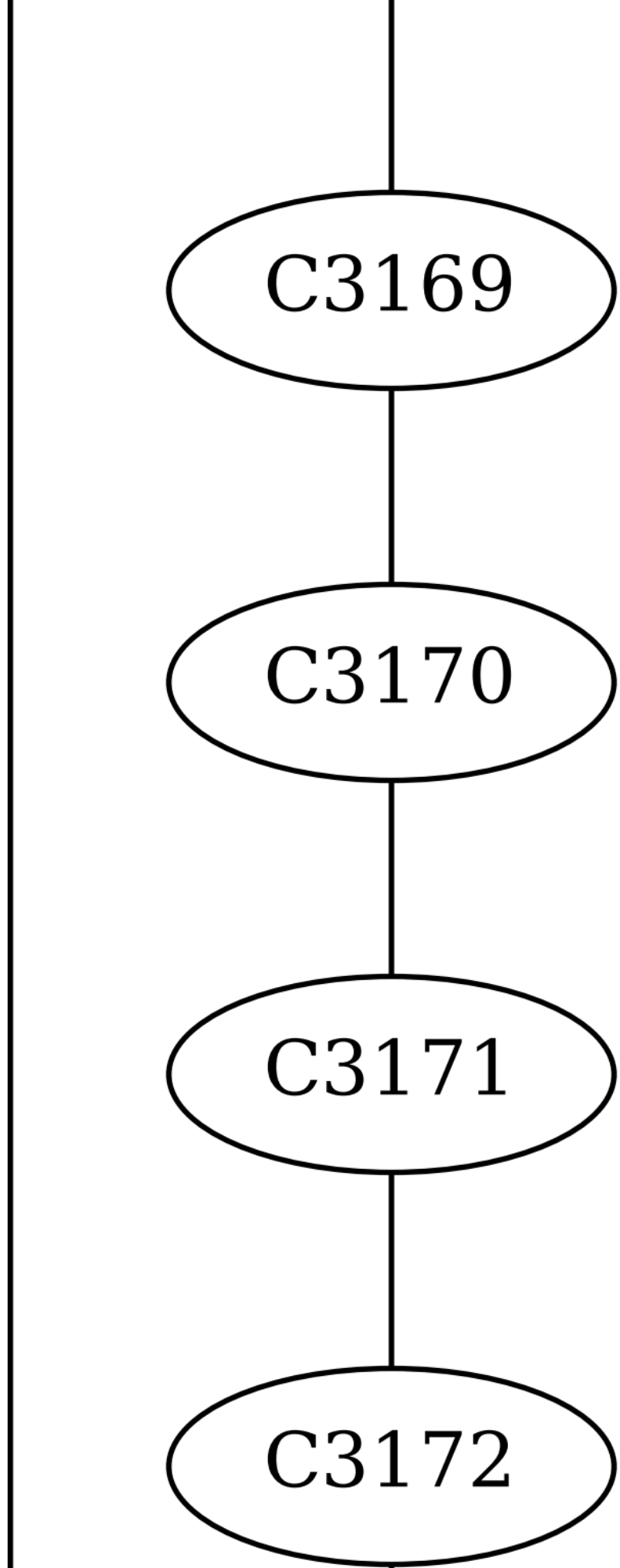
C3169
C3170
C3171
C3172

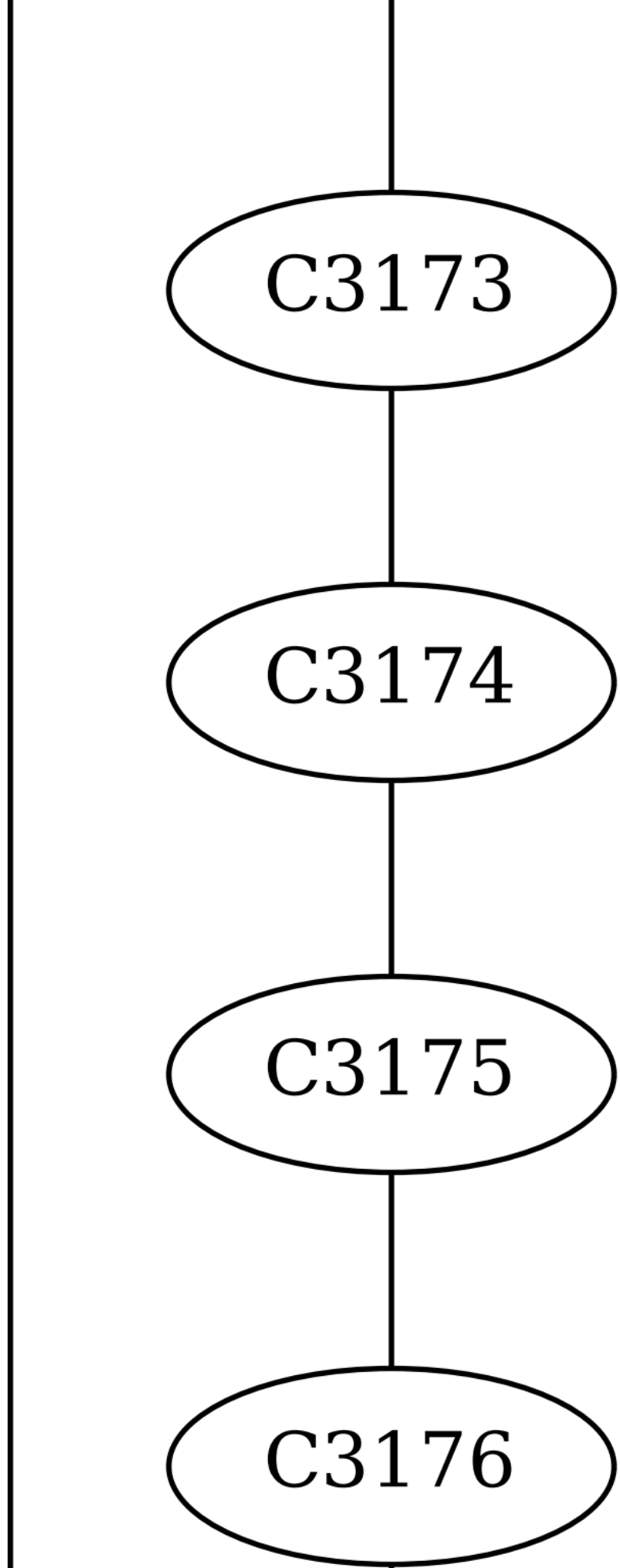
C3173
C3174
C3175
C3176

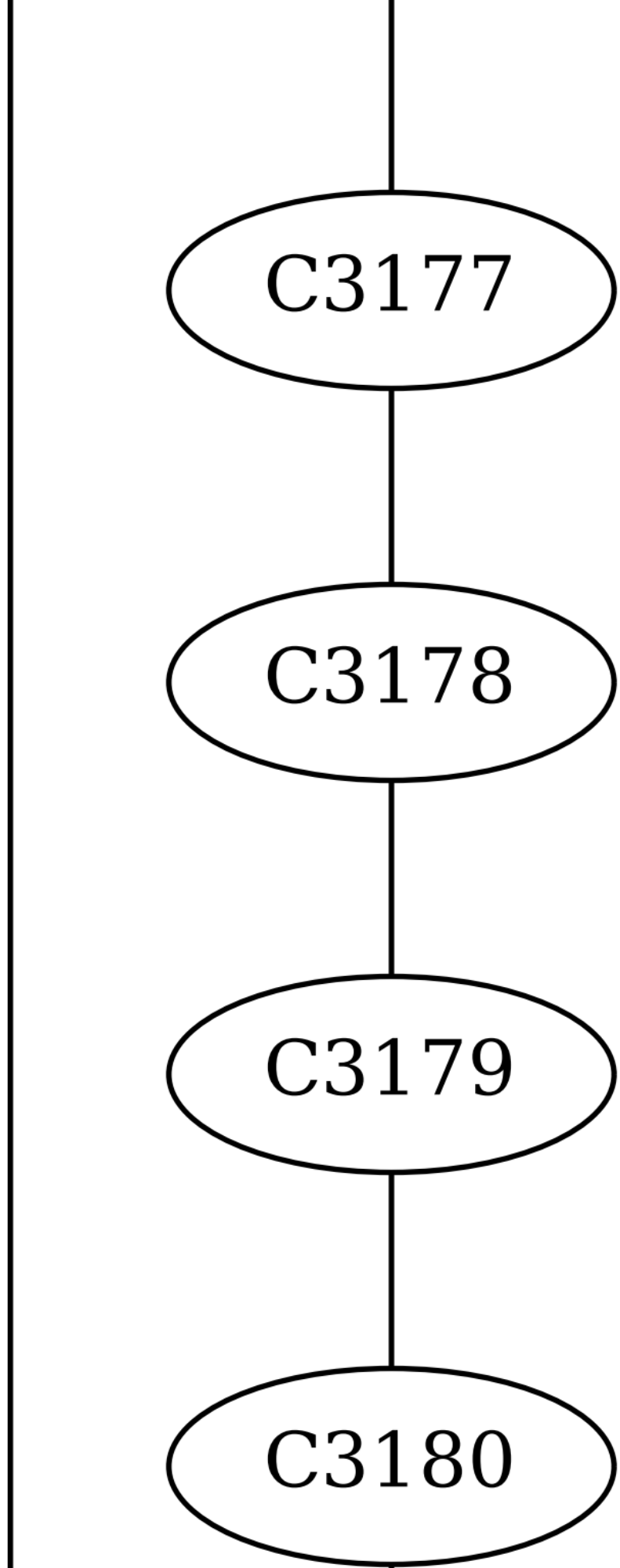
C3177
C3178
C3179
C3180

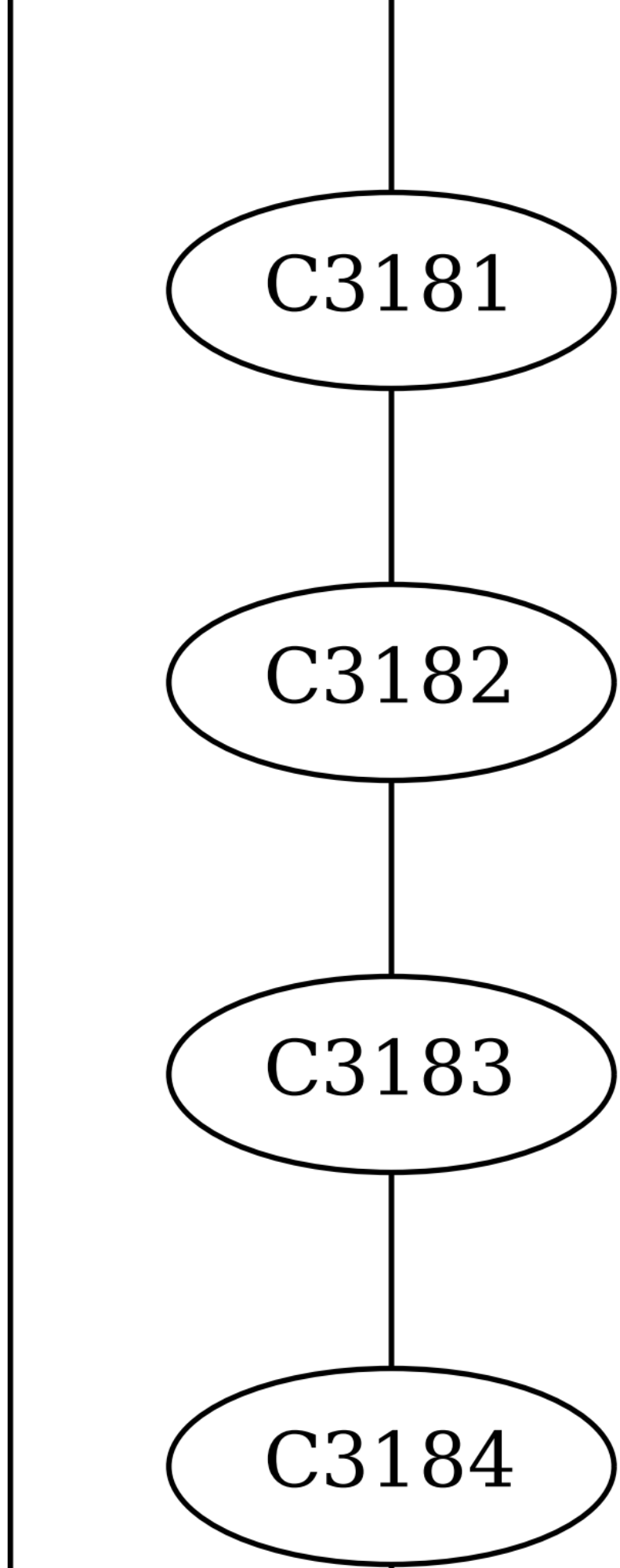
C3181
C3182
C3183
C3184

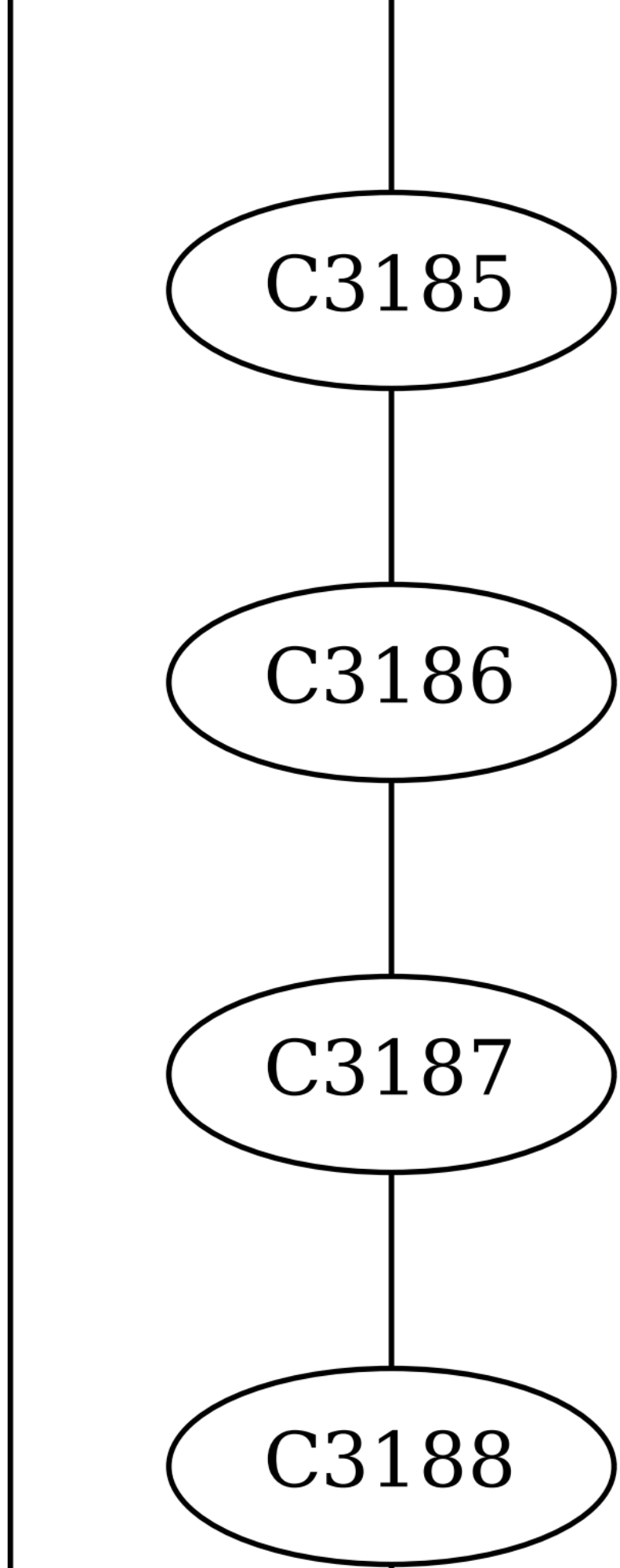
C3185
C3186
C3187
C3188

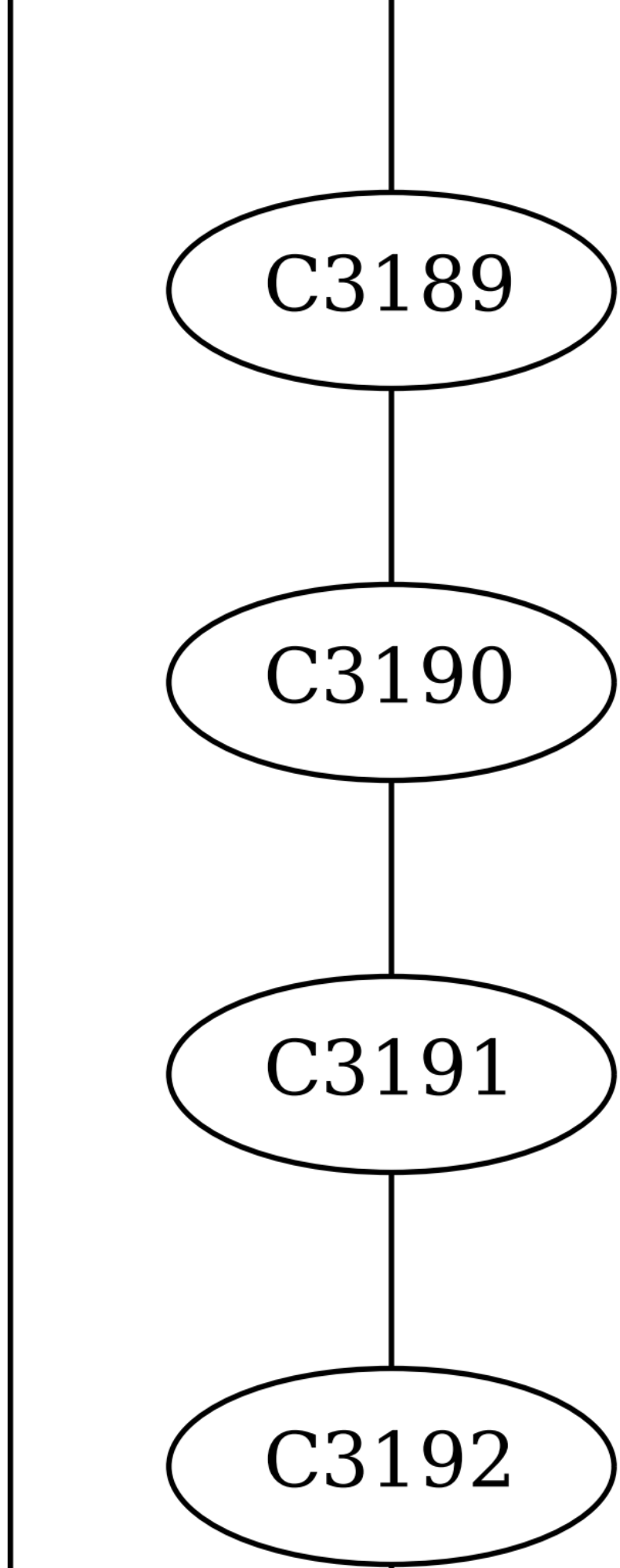
C3189
C3190
C3191
C3192

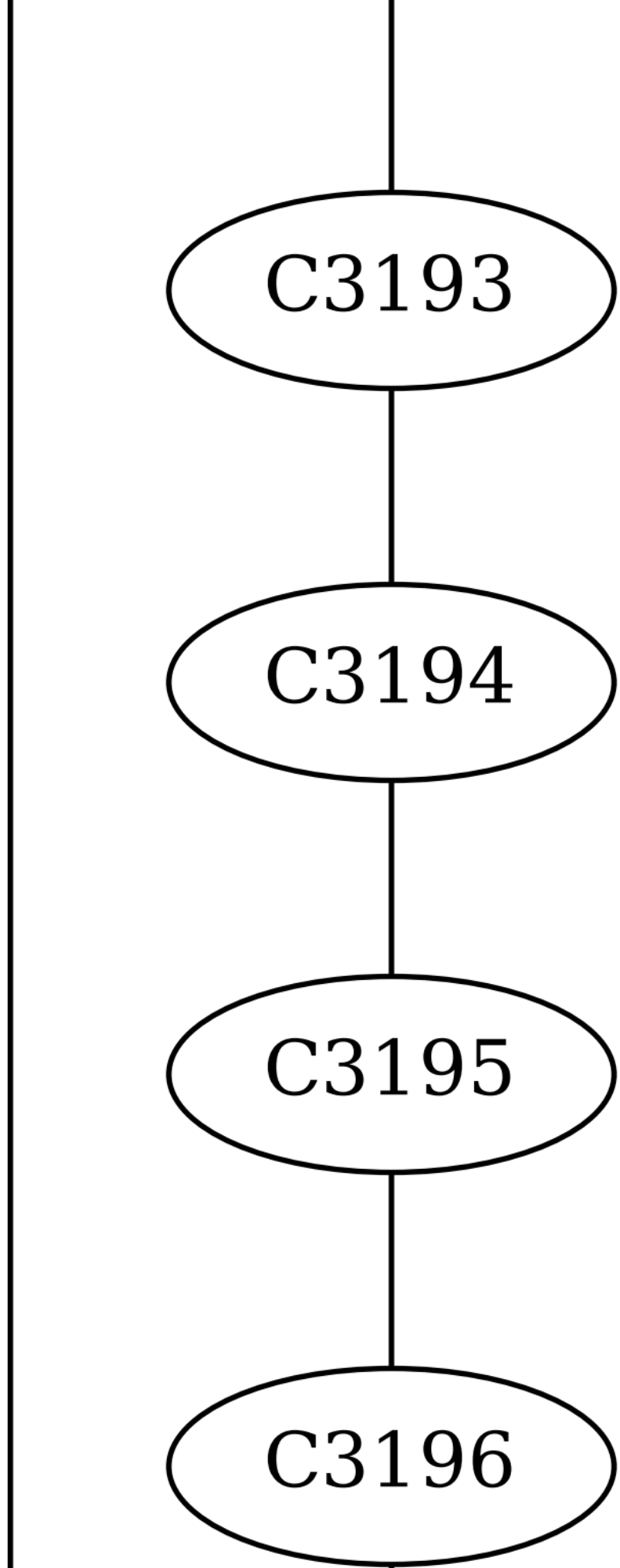
C3193
C3194
C3195
C3196

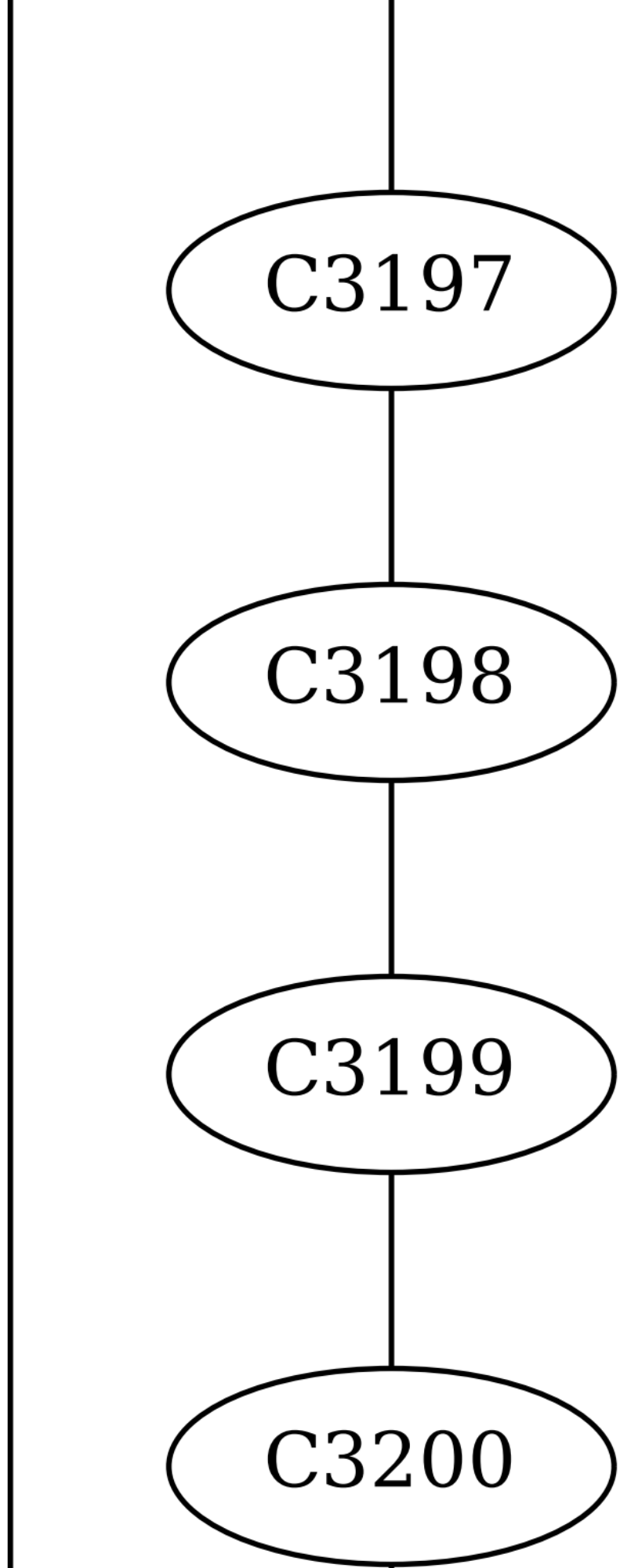
C3197
C3198
C3199
C3200

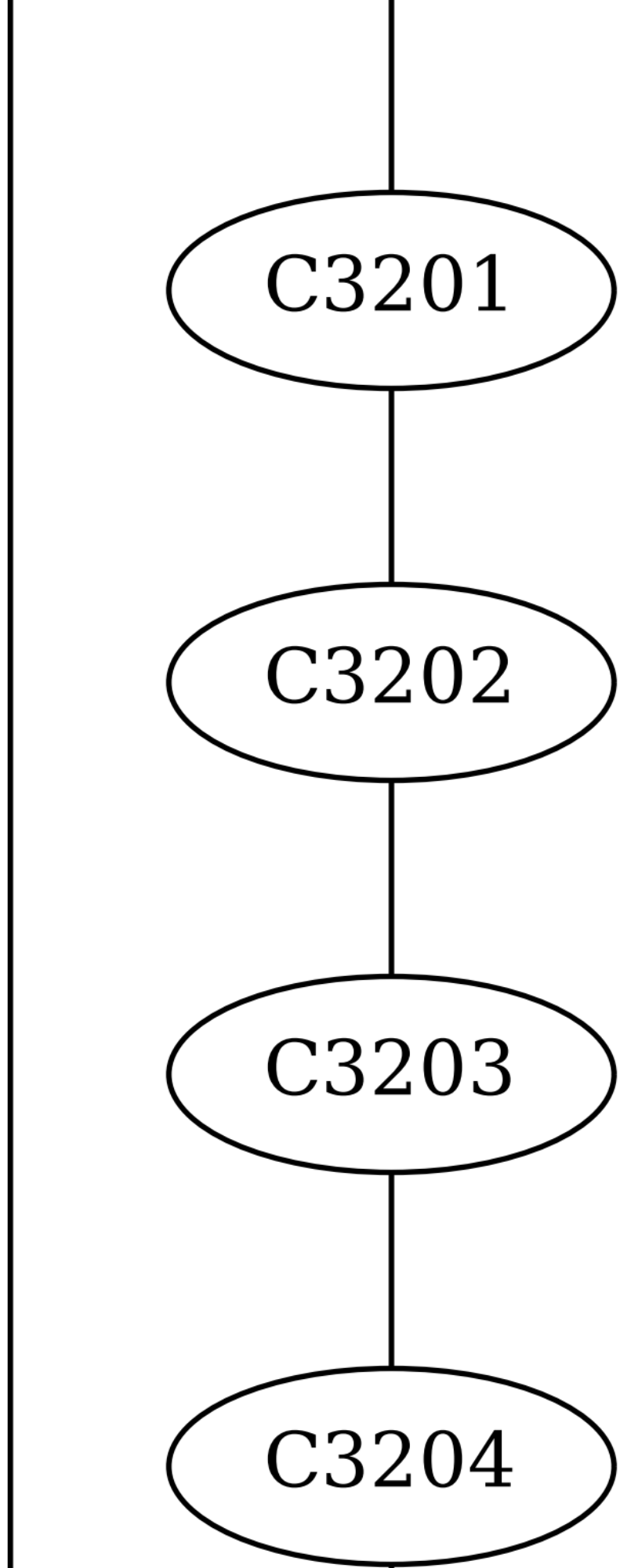
C3201
C3202
C3203
C3204

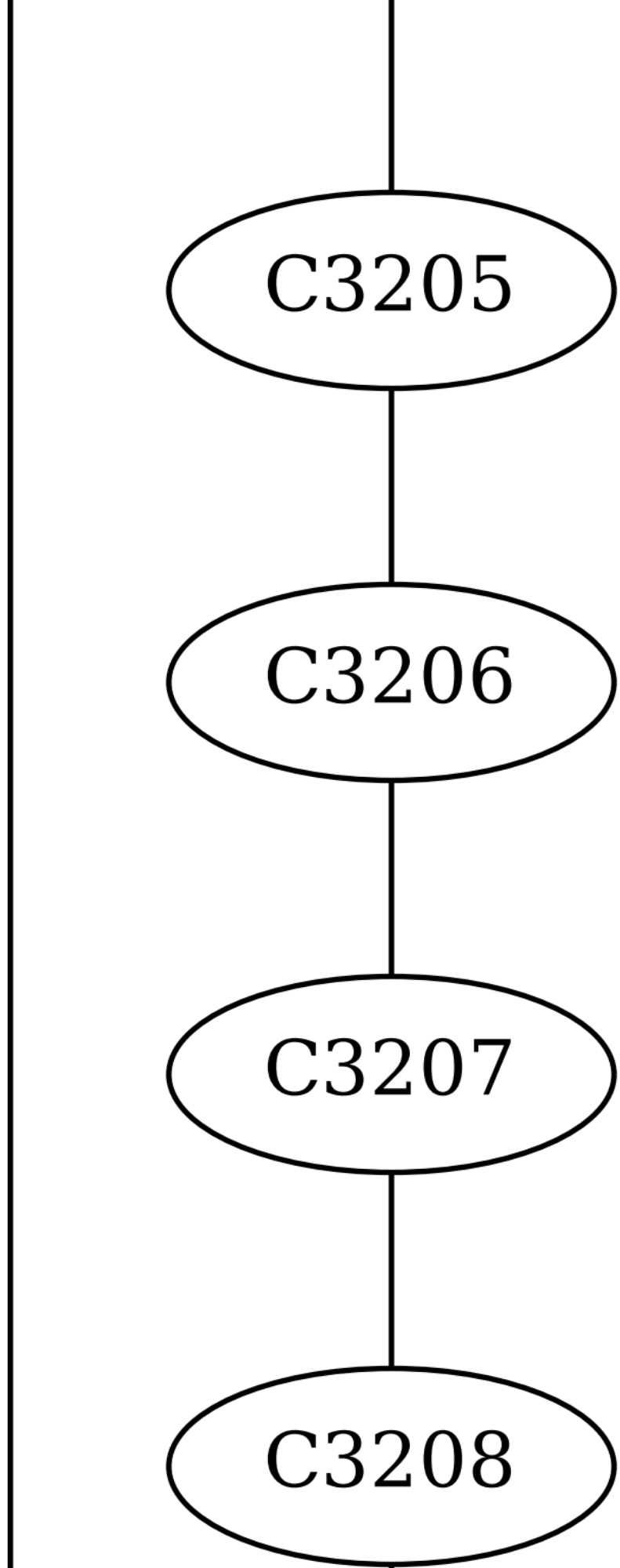
C3205
C3206
C3207
C3208

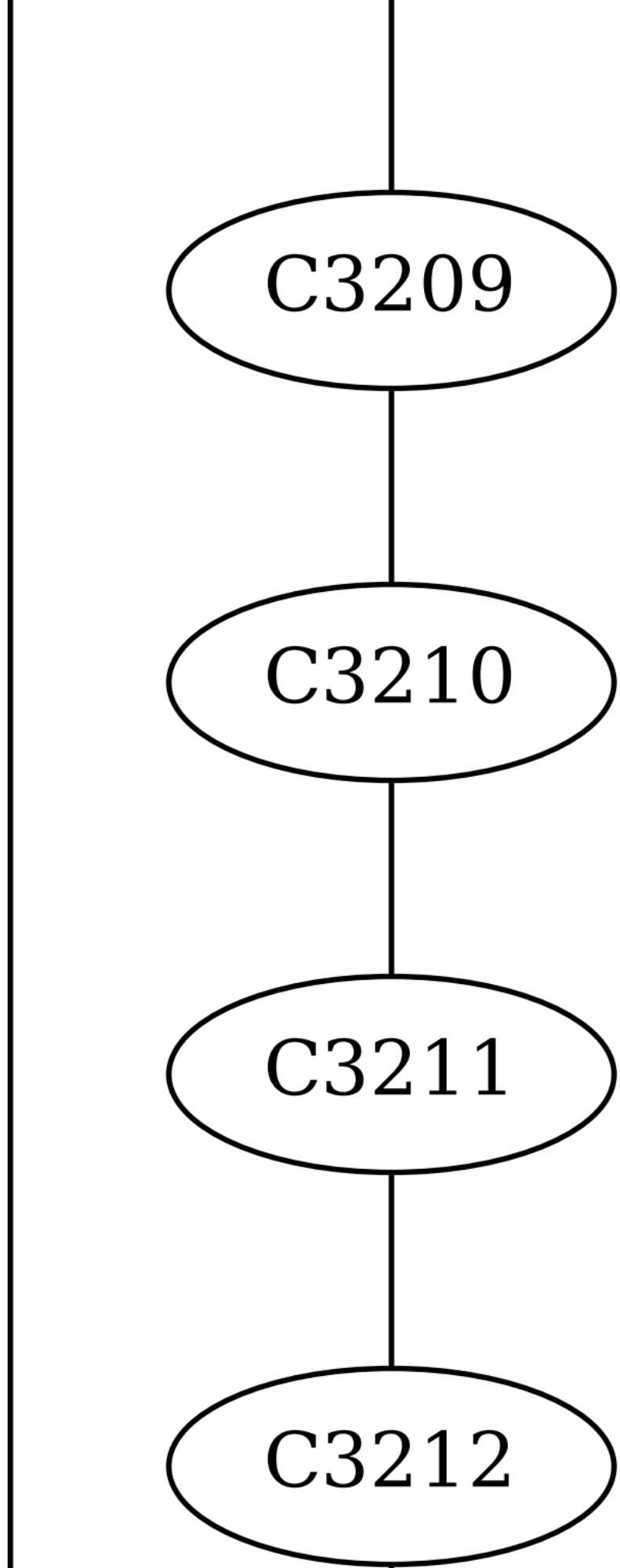
C3209
C3210
C3211
C3212

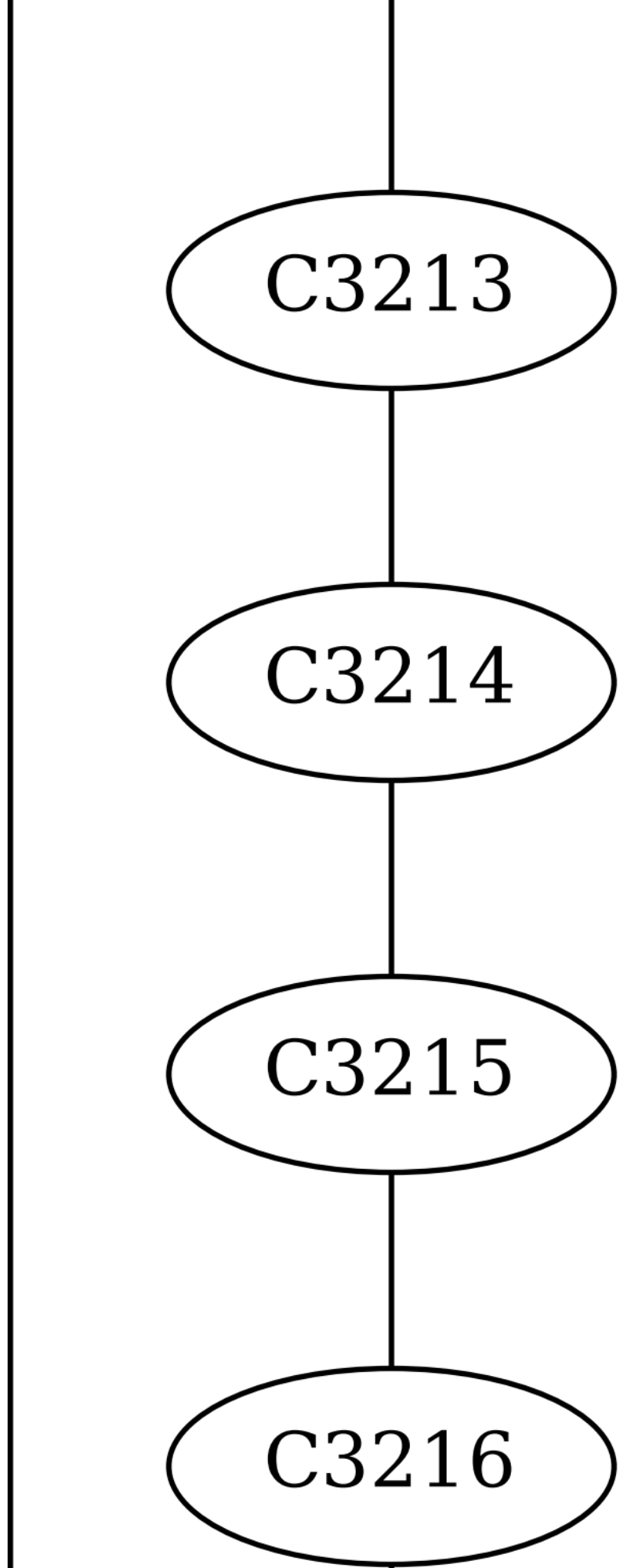
C3213
C3214
C3215
C3216

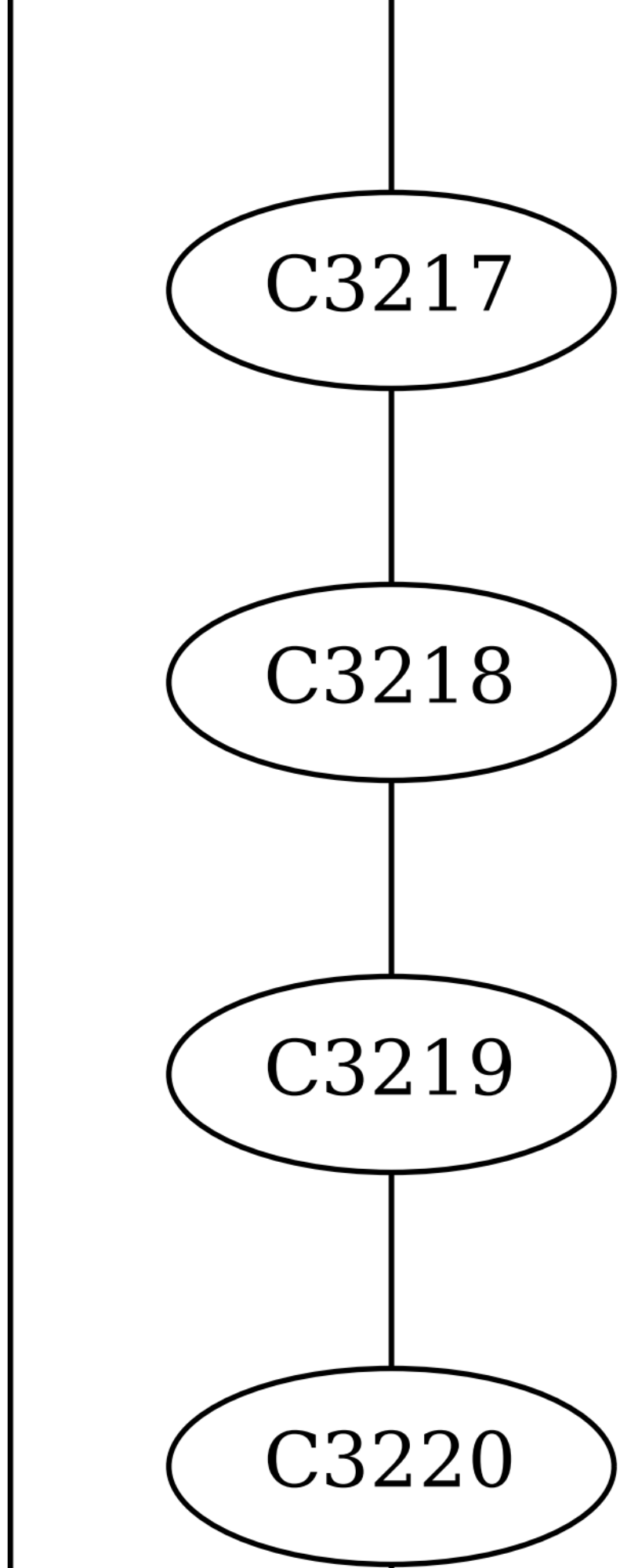
C3217
C3218
C3219
C3220

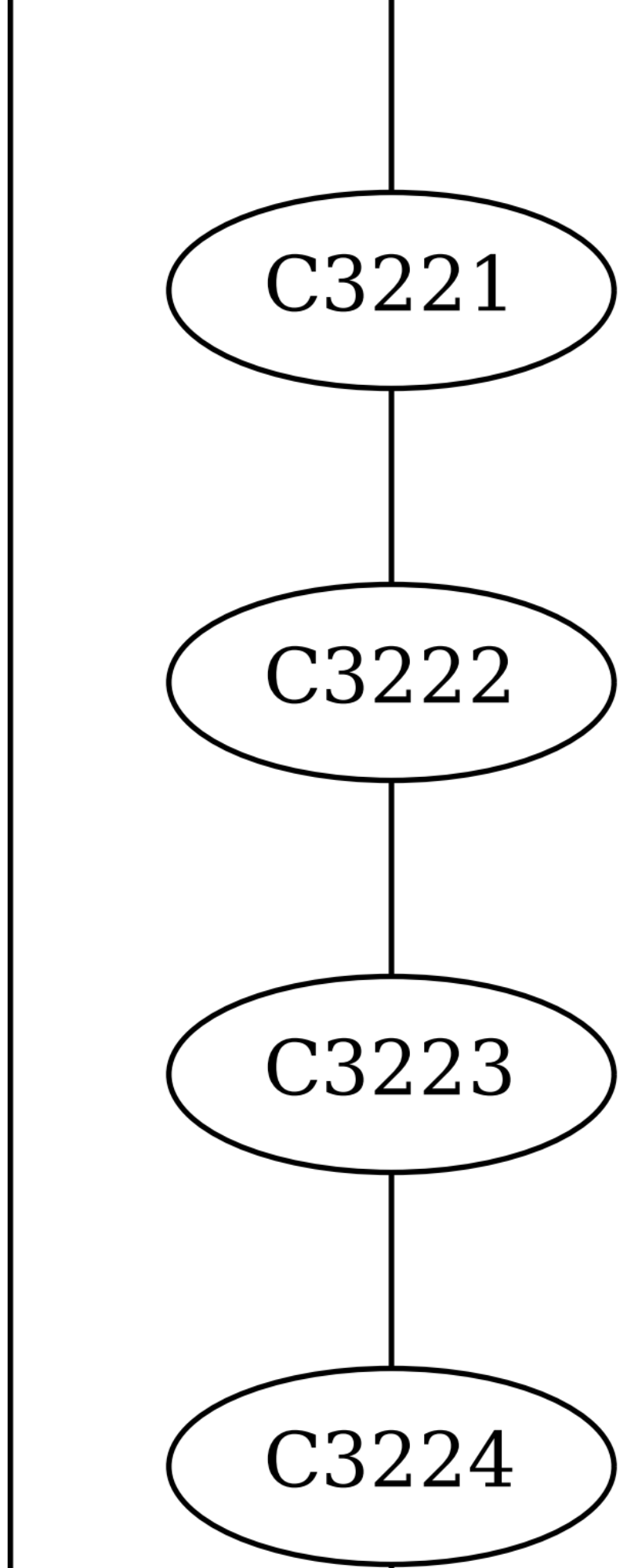
C3221
C3222
C3223
C3224

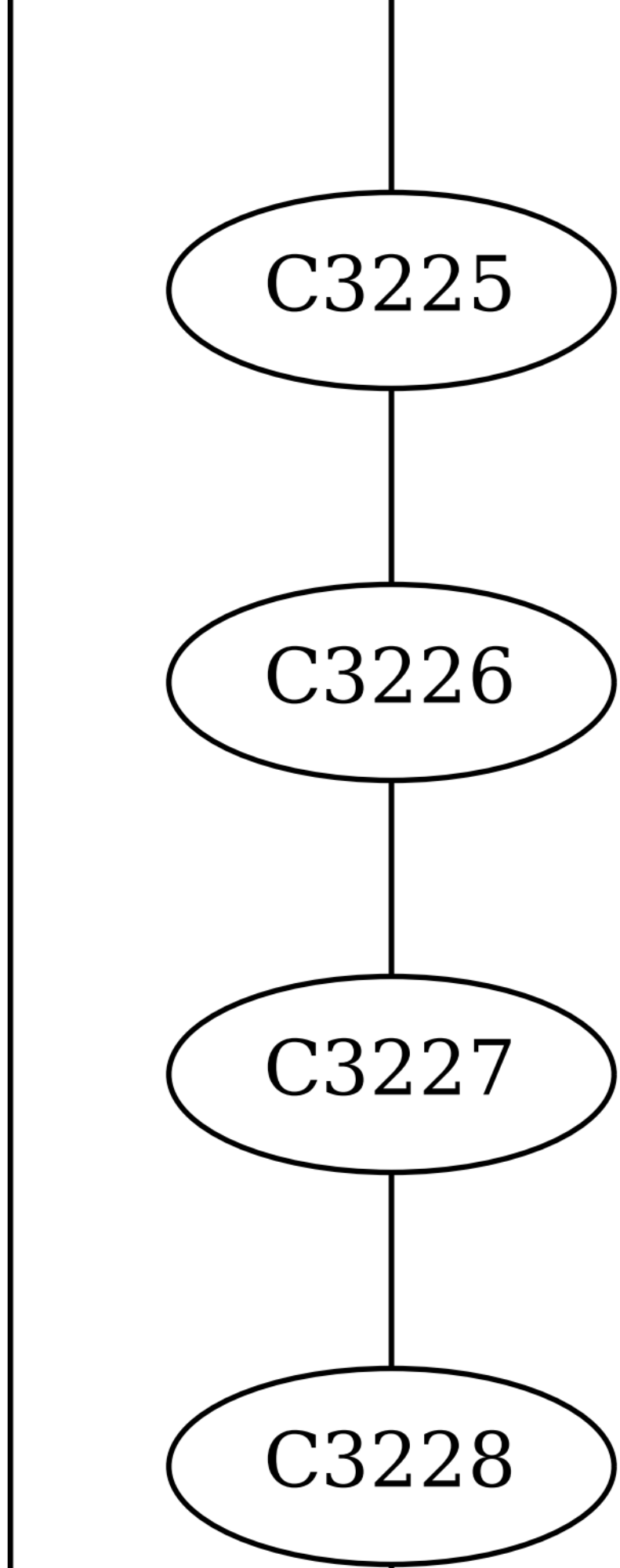
C3225
C3226
C3227
C3228

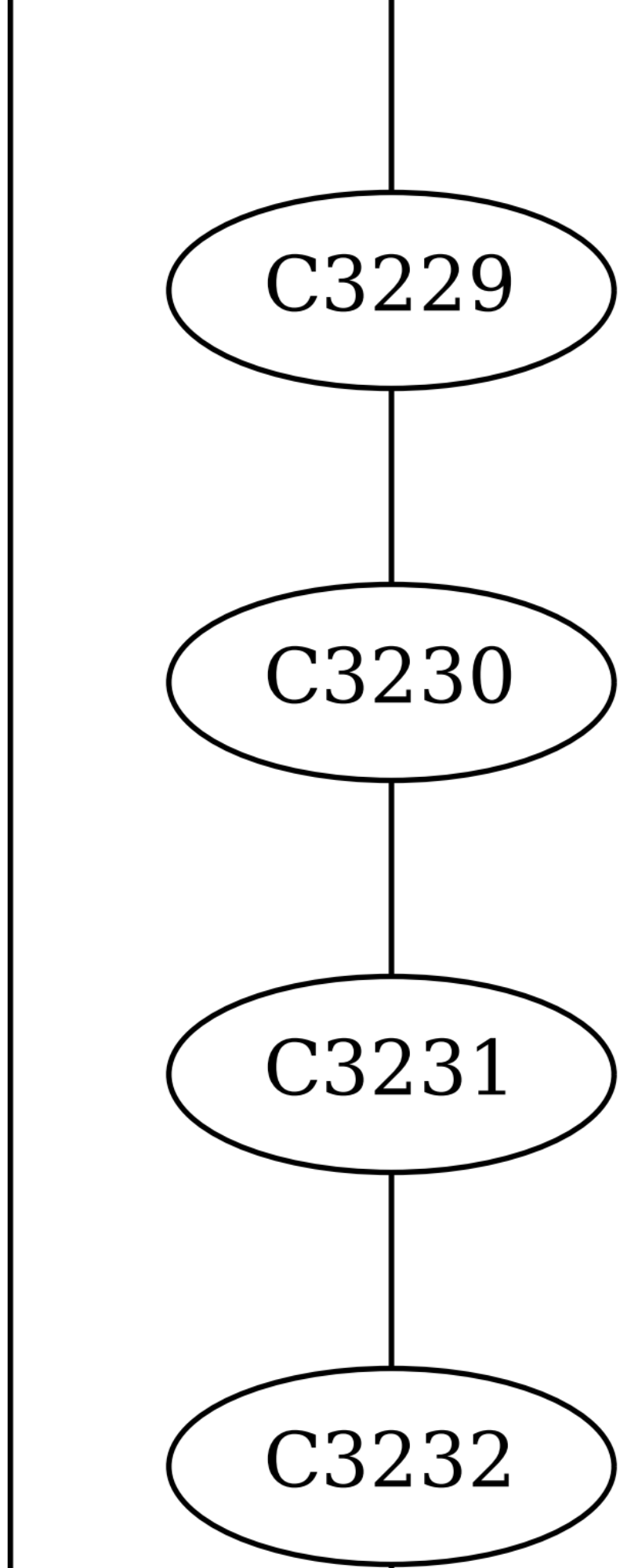
C3229
C3230
C3231
C3232

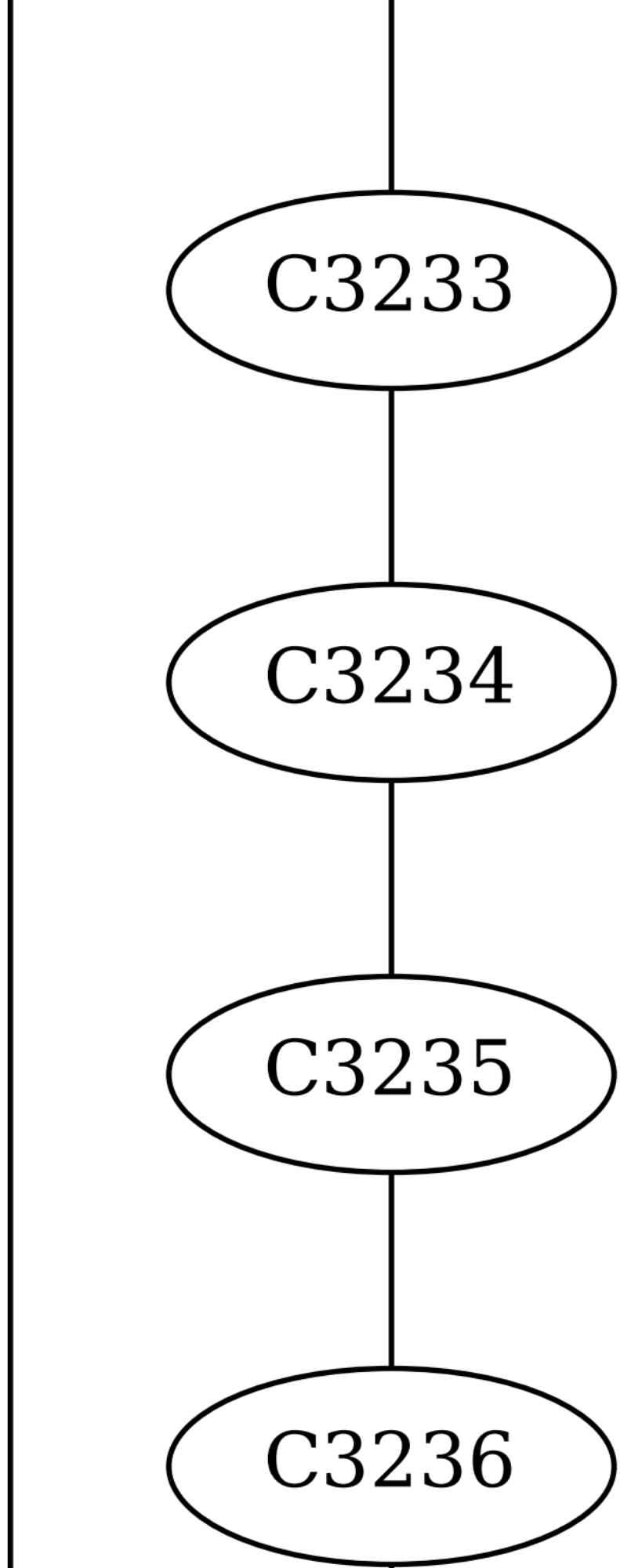
C3233
C3234
C3235
C3236

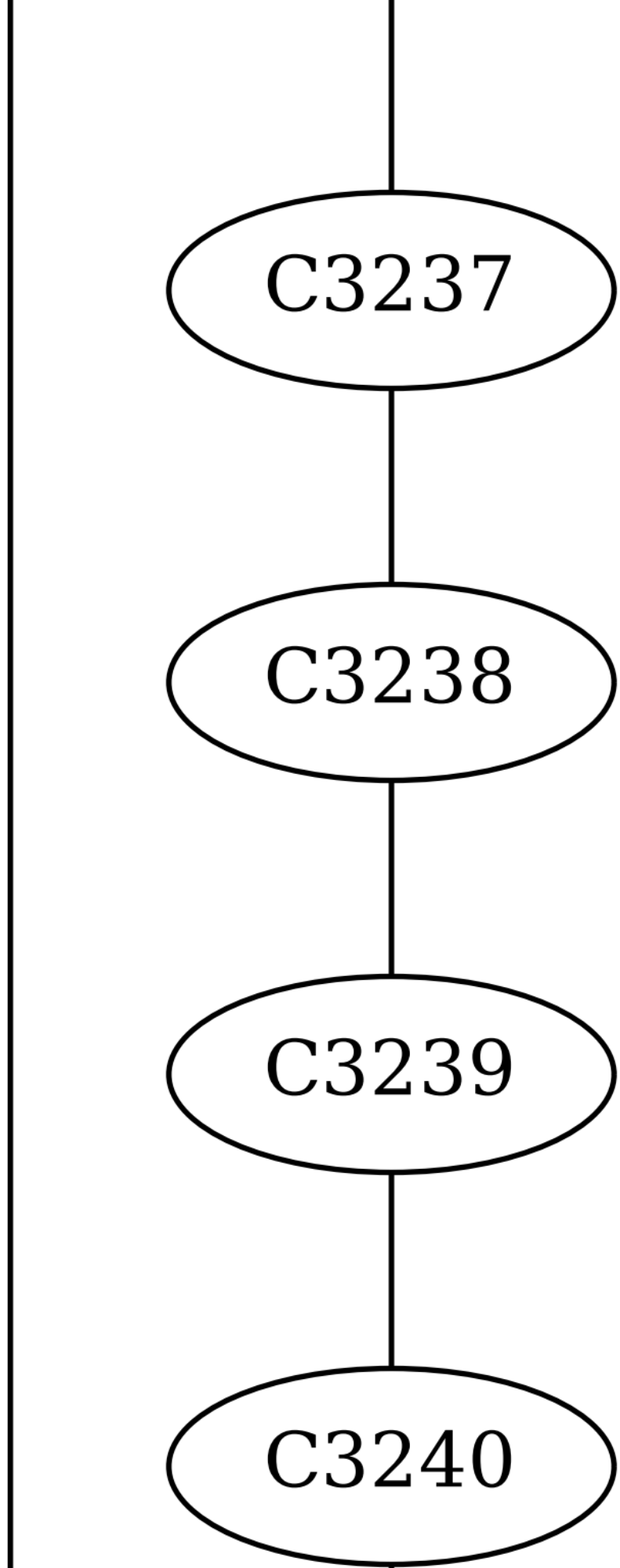
C3237
C3238
C3239
C3240

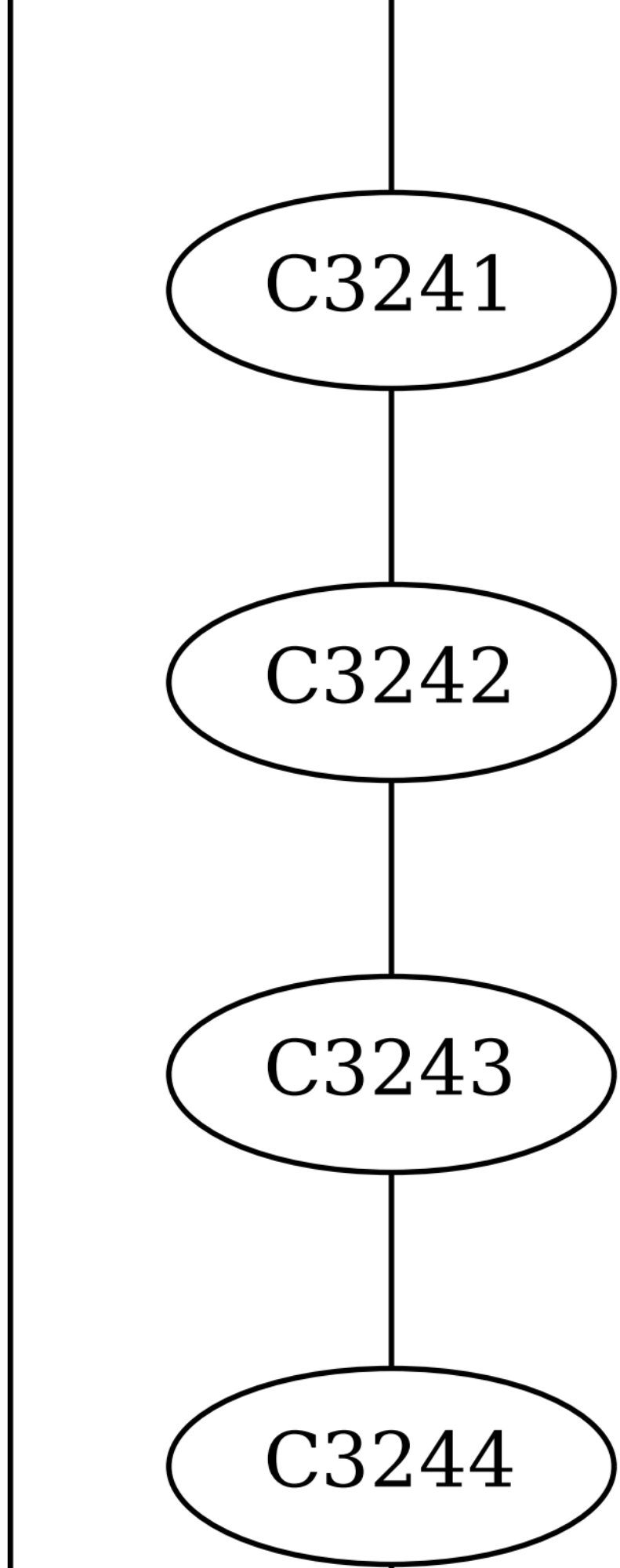
C3241
C3242
C3243
C3244

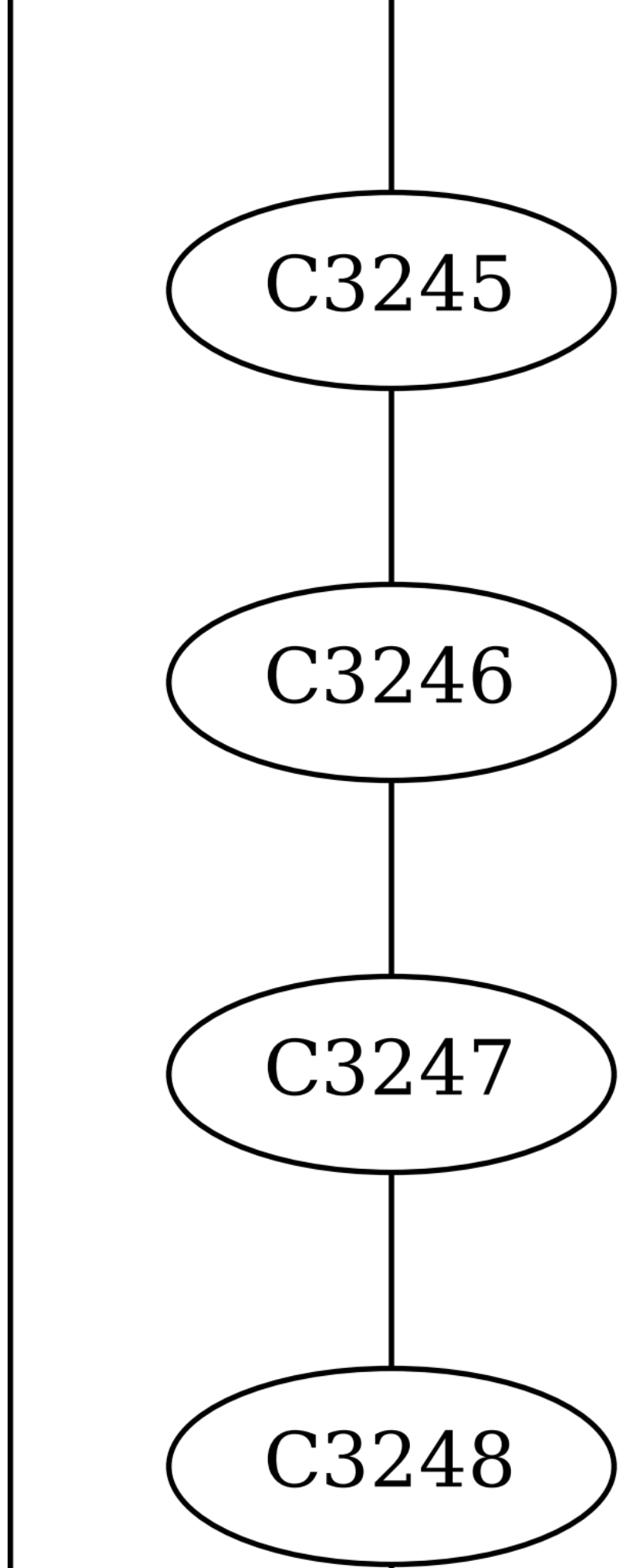
C3245
C3246
C3247
C3248

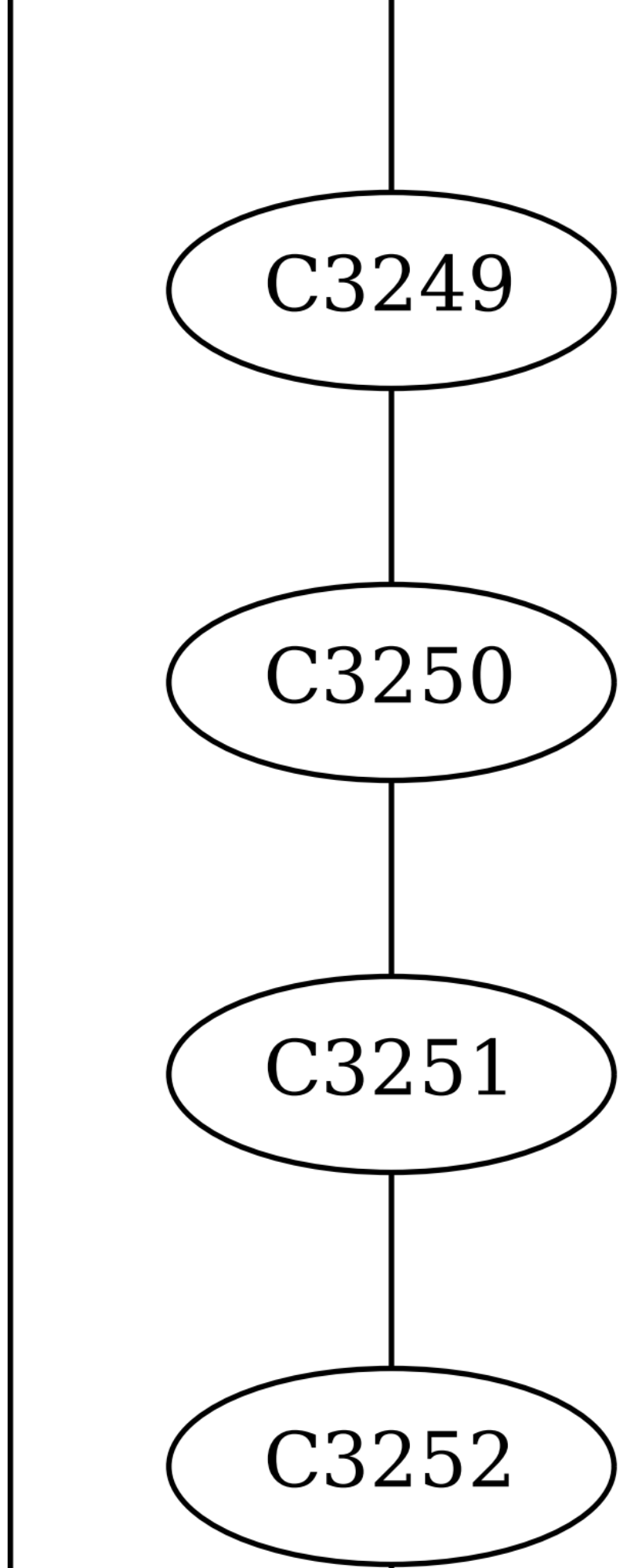
C3249
C3250
C3251
C3252

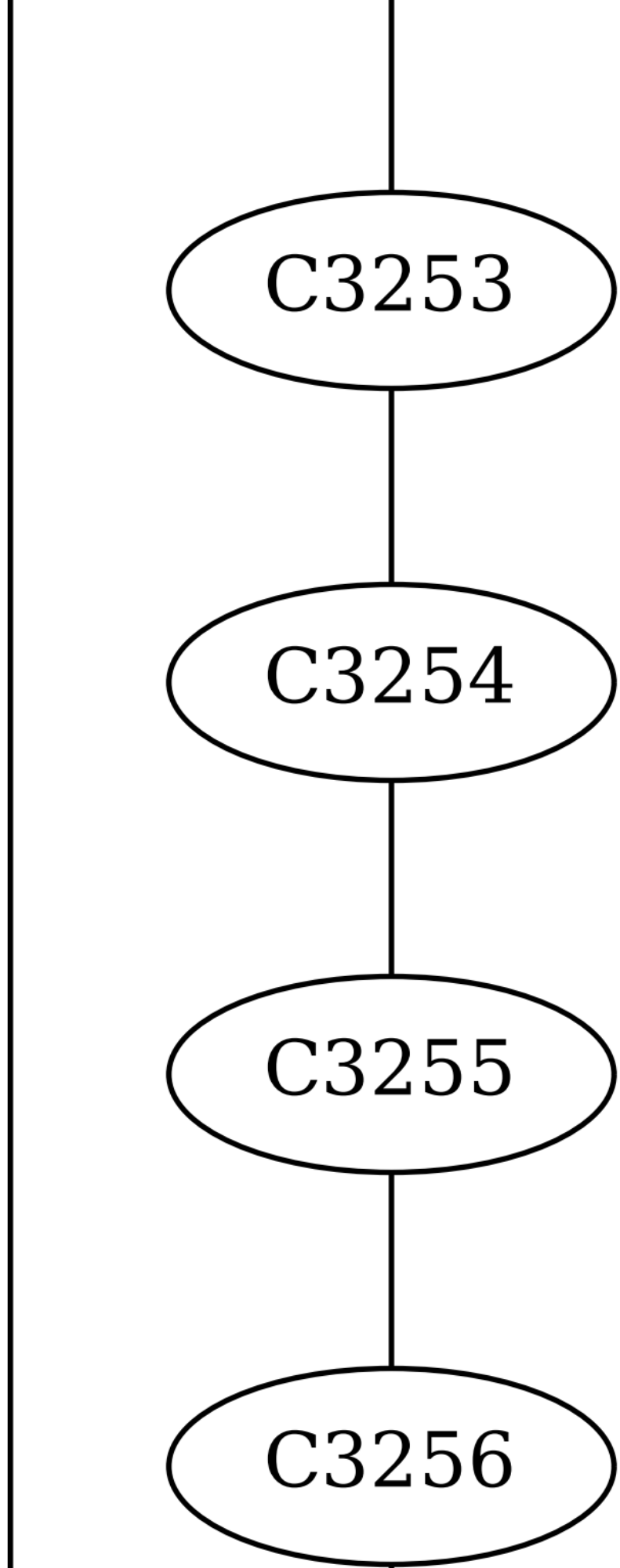
C3253
C3254
C3255
C3256

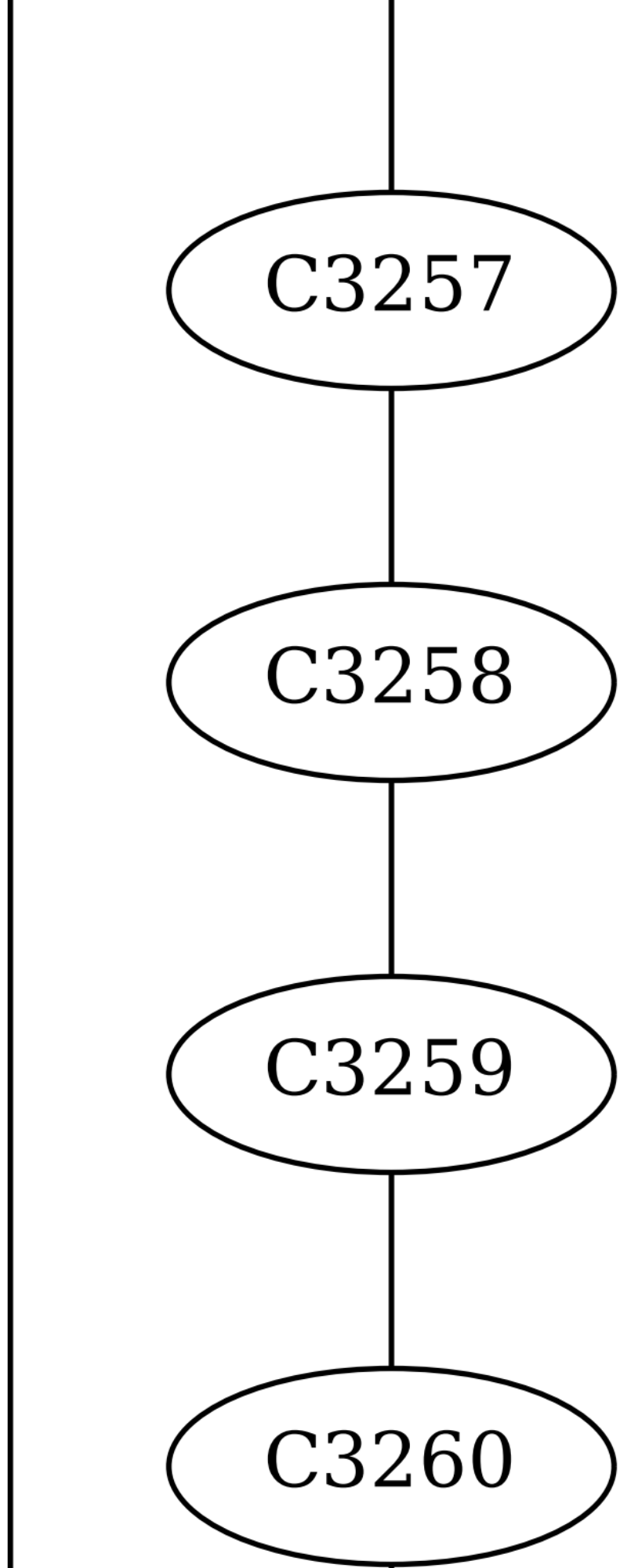
C3257
C3258
C3259
C3260

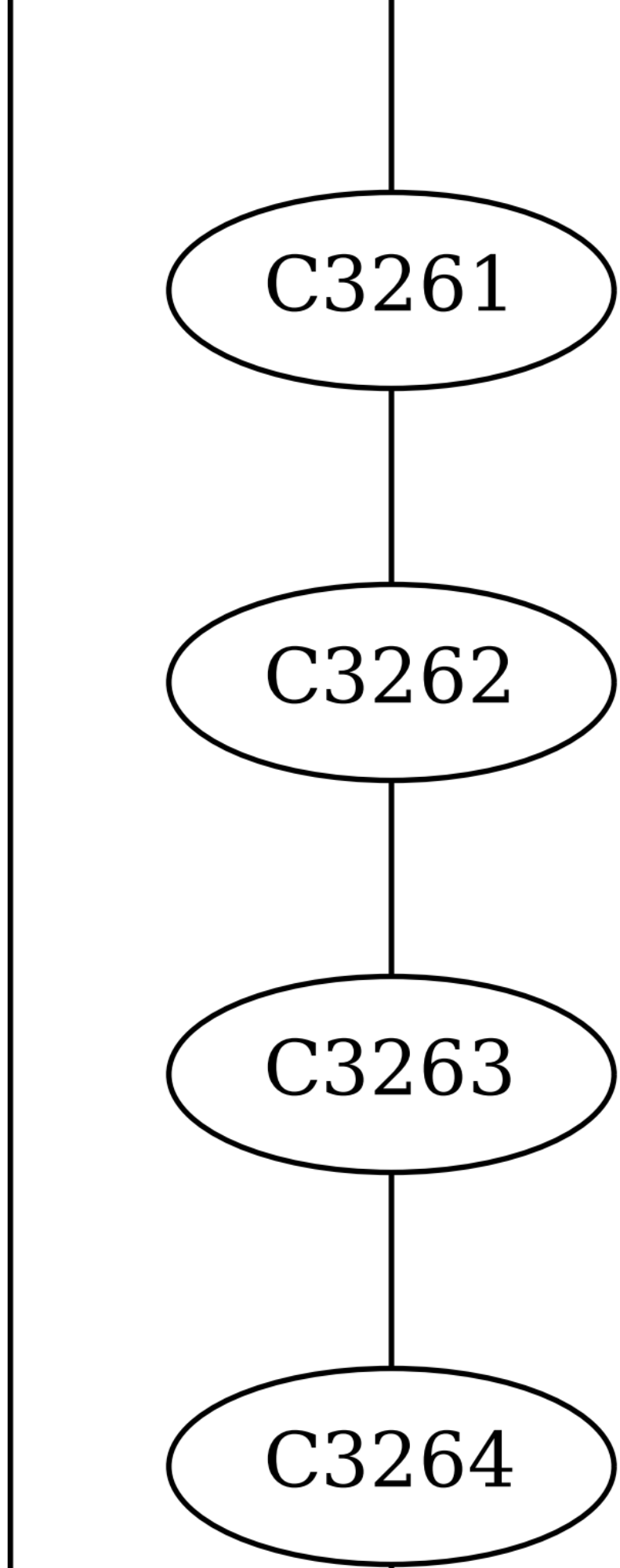
C3261
C3262
C3263
C3264

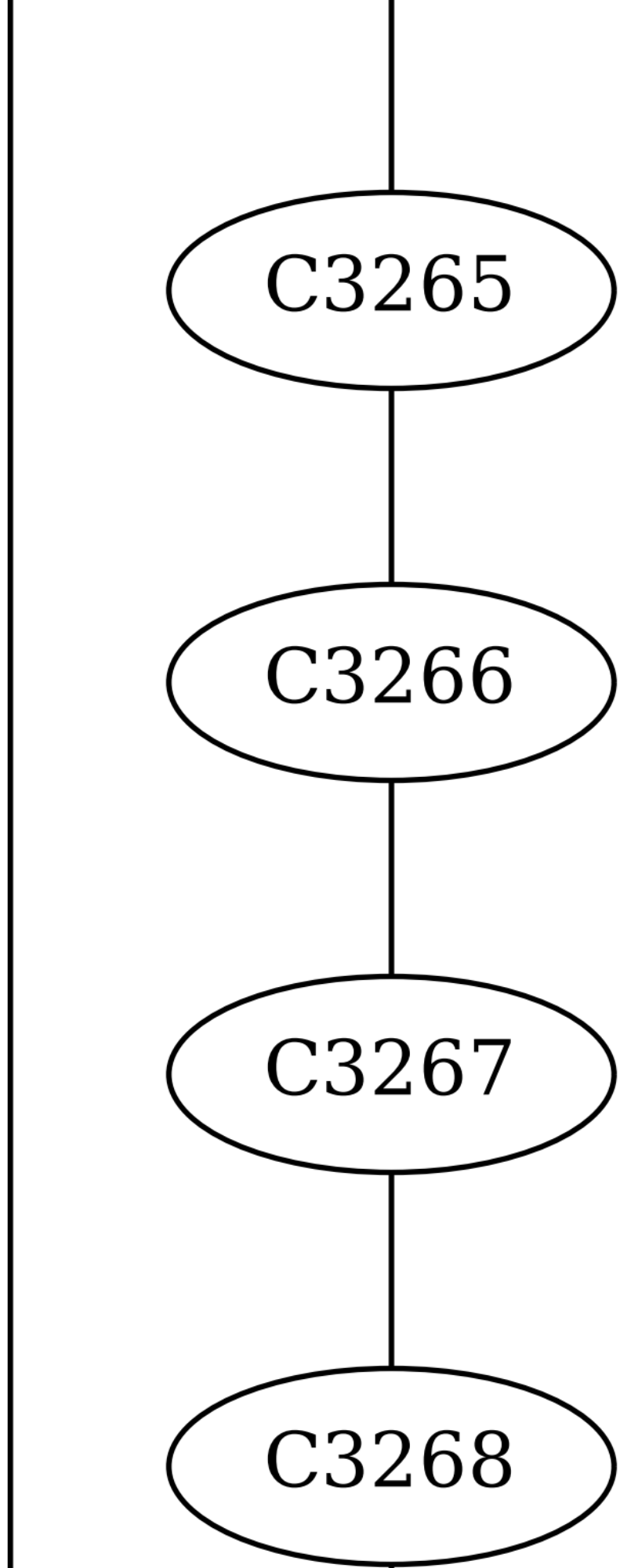
C3265
C3266
C3267
C3268

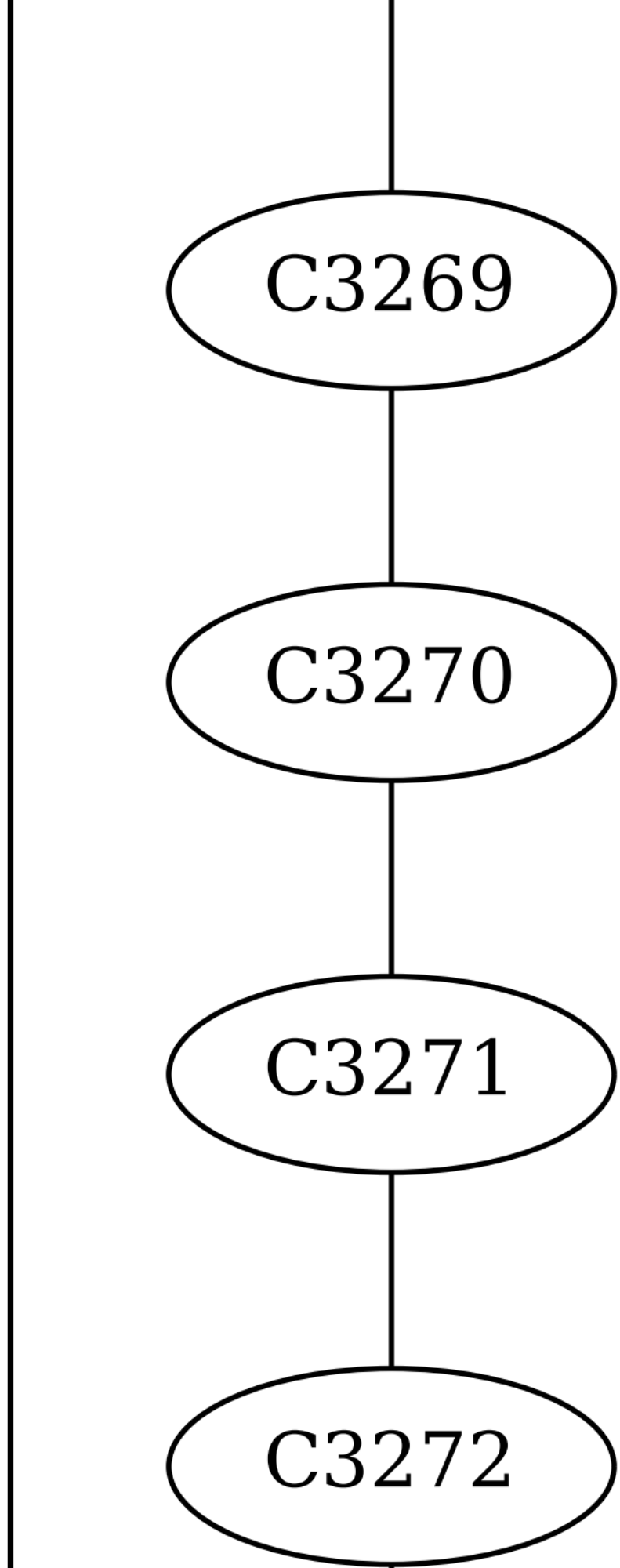
C3269
C3270
C3271
C3272

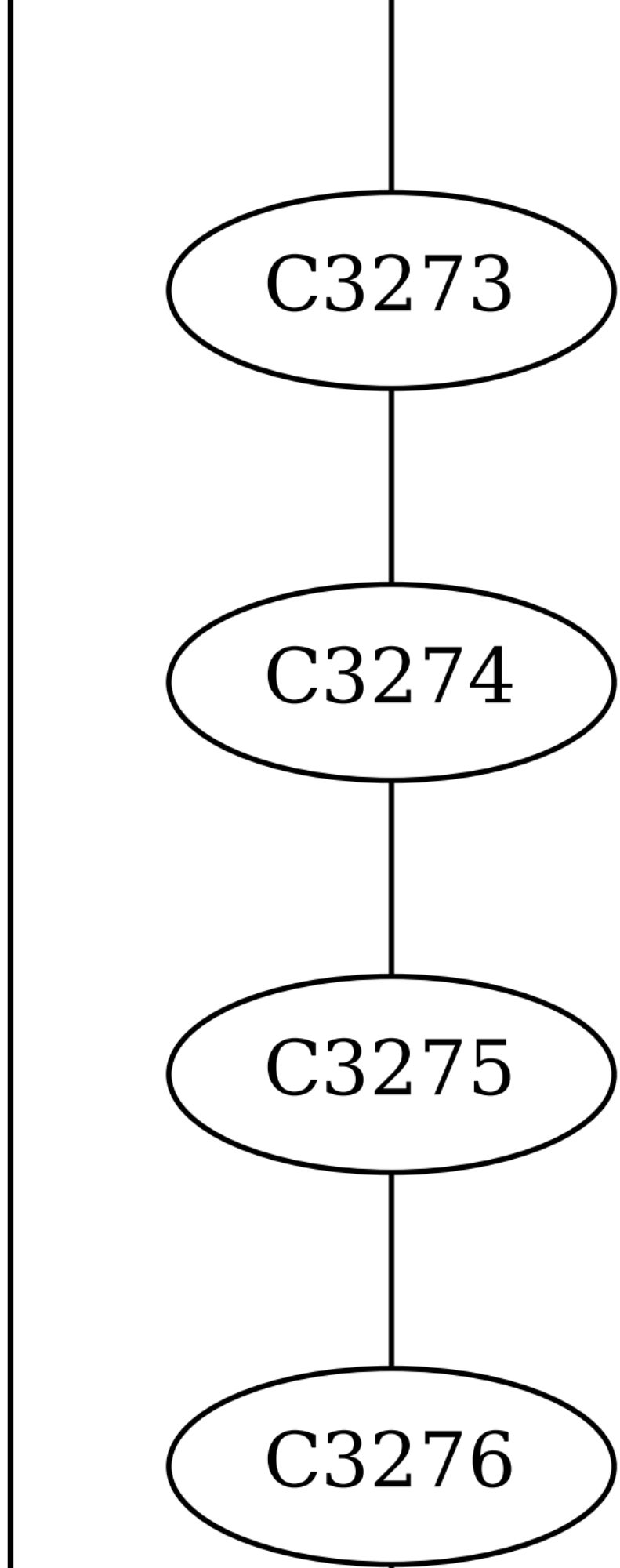
C3273
C3274
C3275
C3276

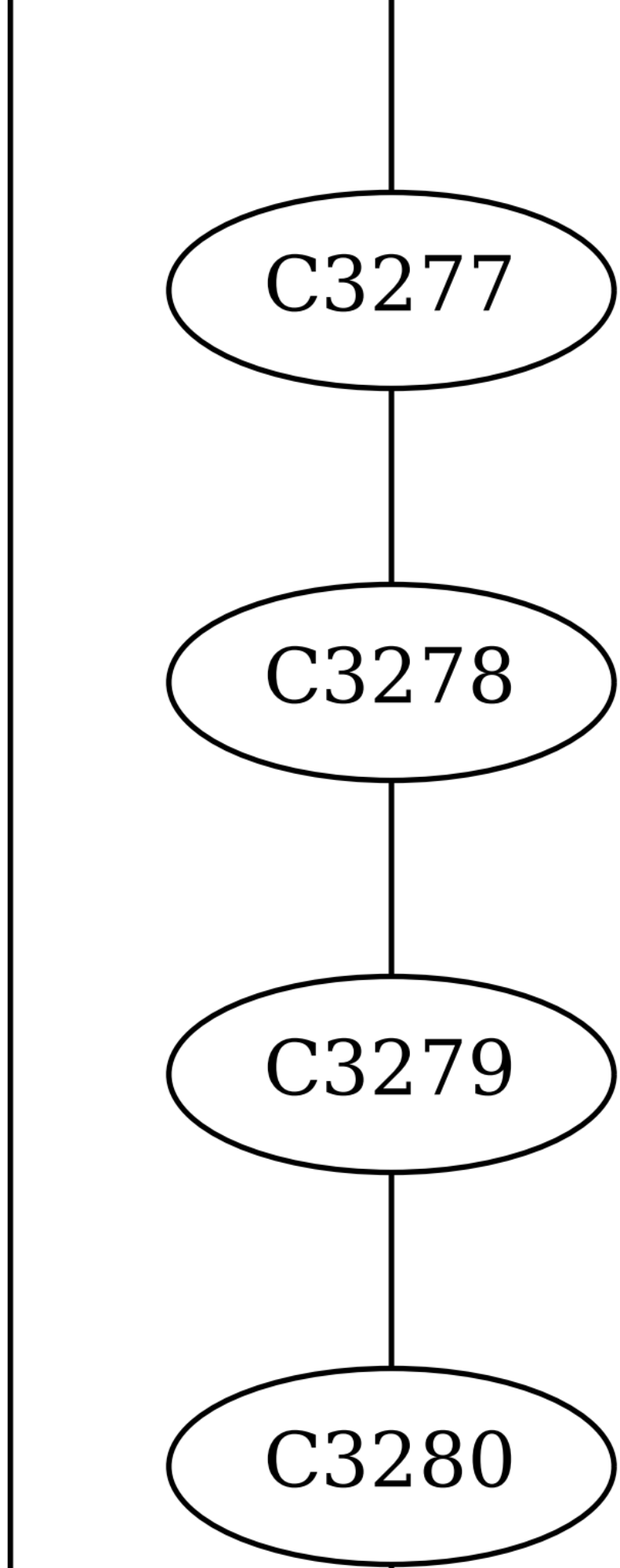
C3277
C3278
C3279
C3280

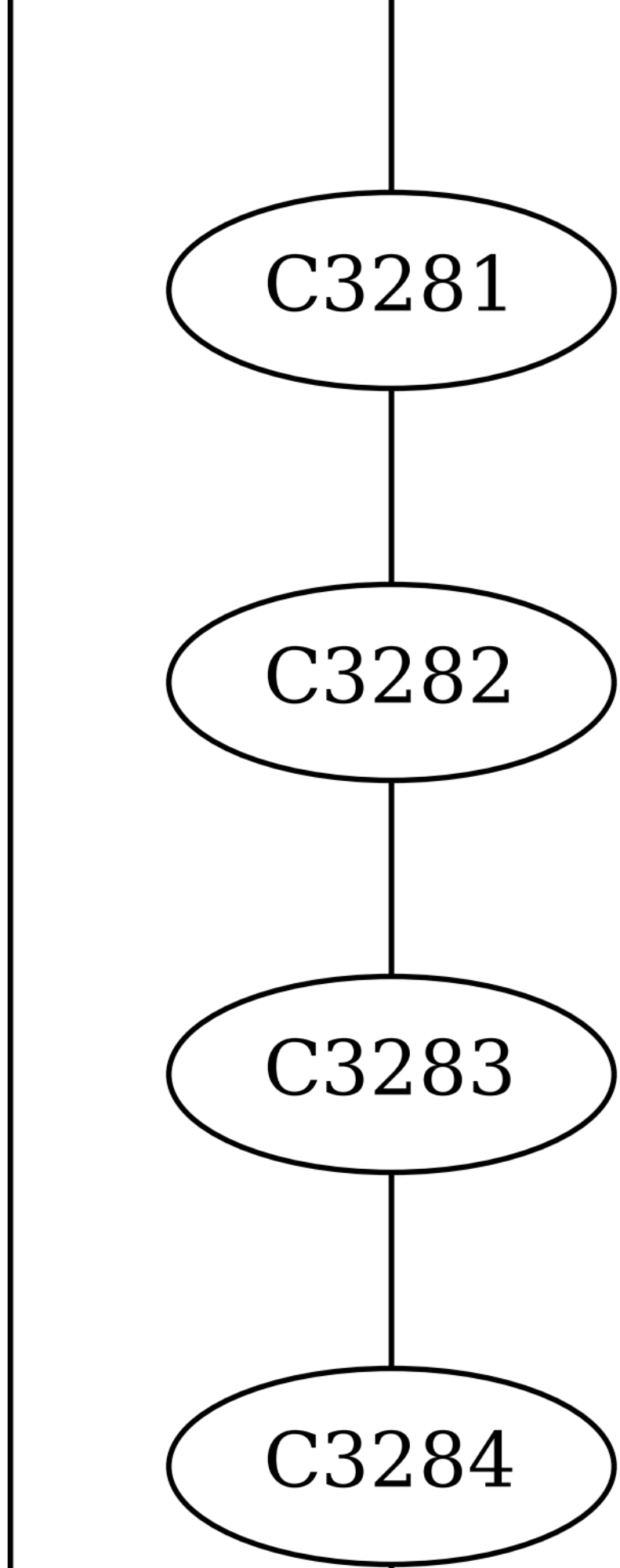
C3281
C3282
C3283
C3284

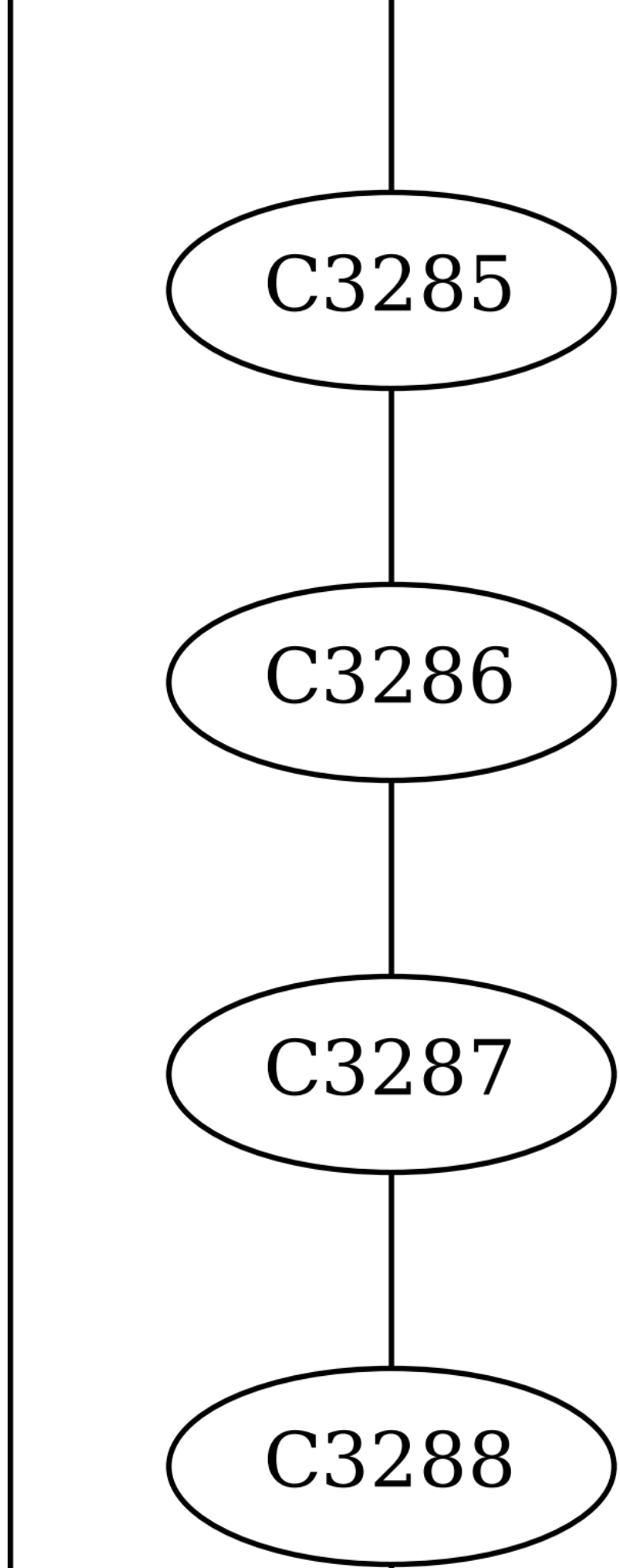
C3285
C3286
C3287
C3288

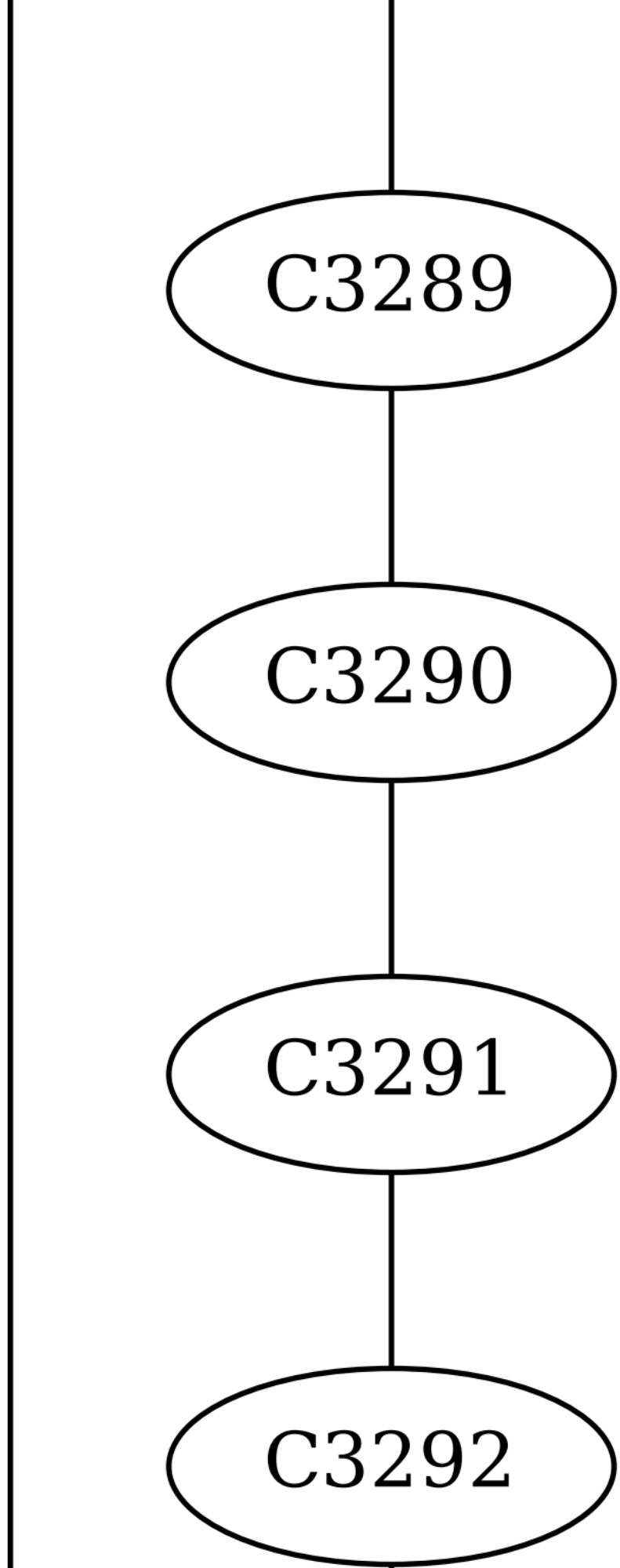
C3289
C3290
C3291
C3292

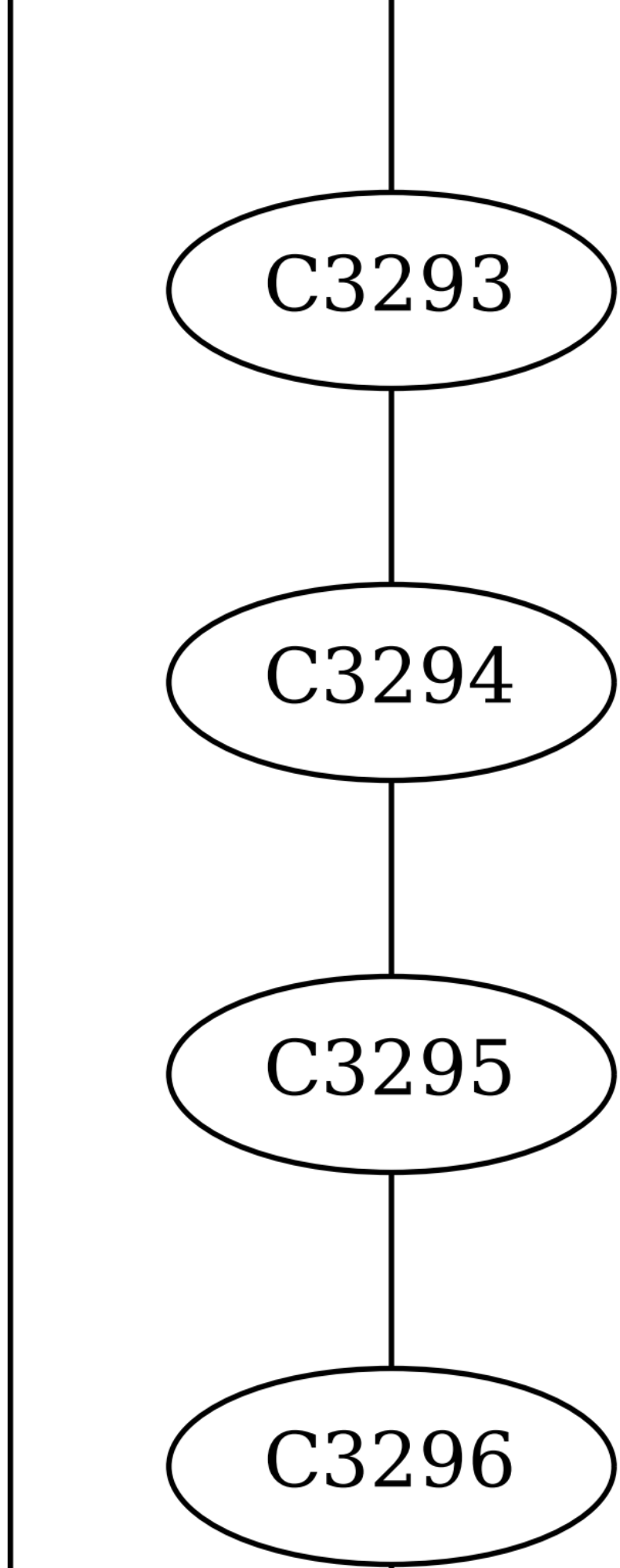
C3293
C3294
C3295
C3296

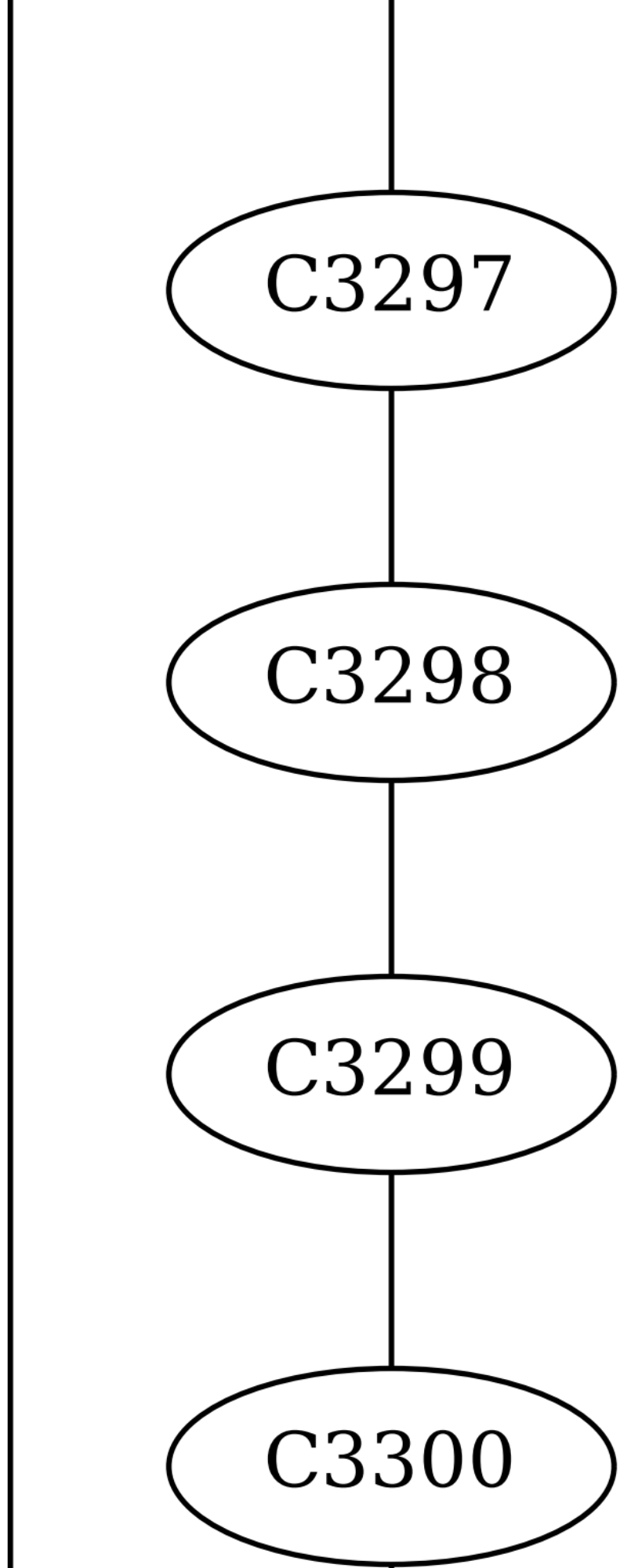
C3297
C3298
C3299
C3300

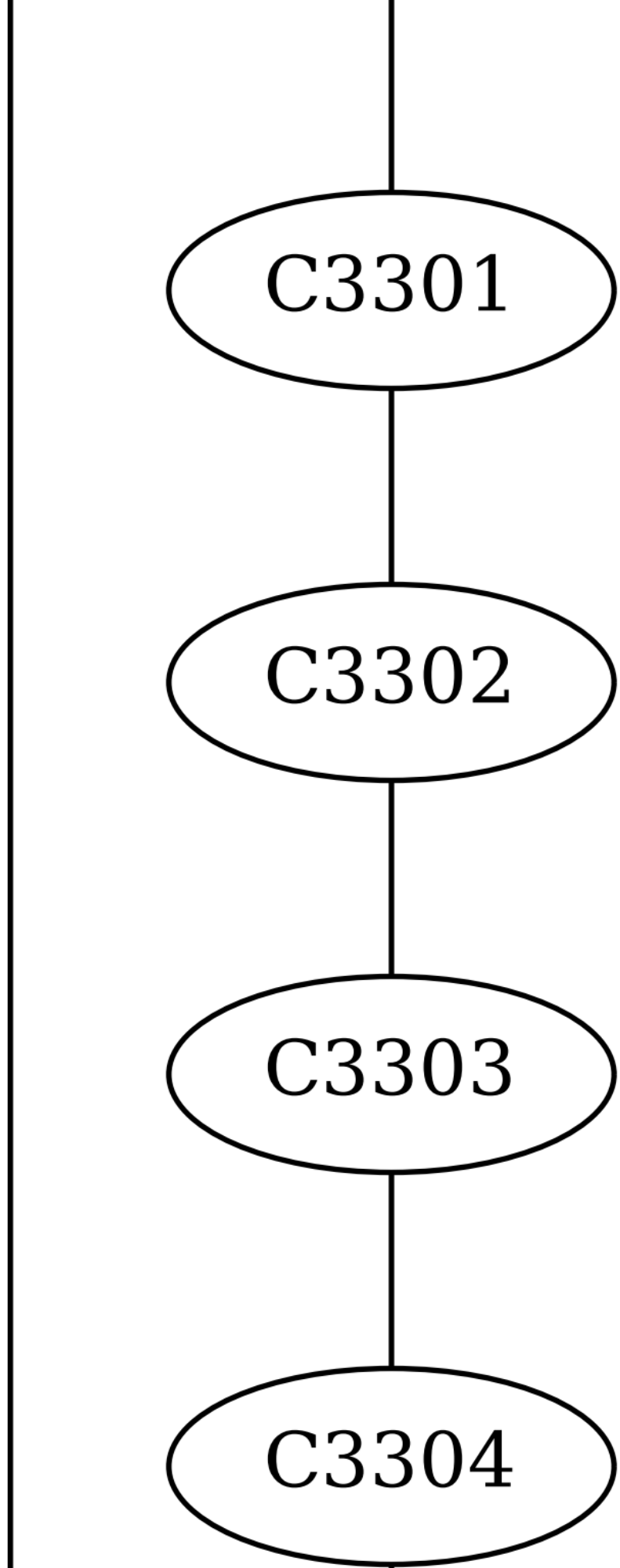
C3301
C3302
C3303
C3304

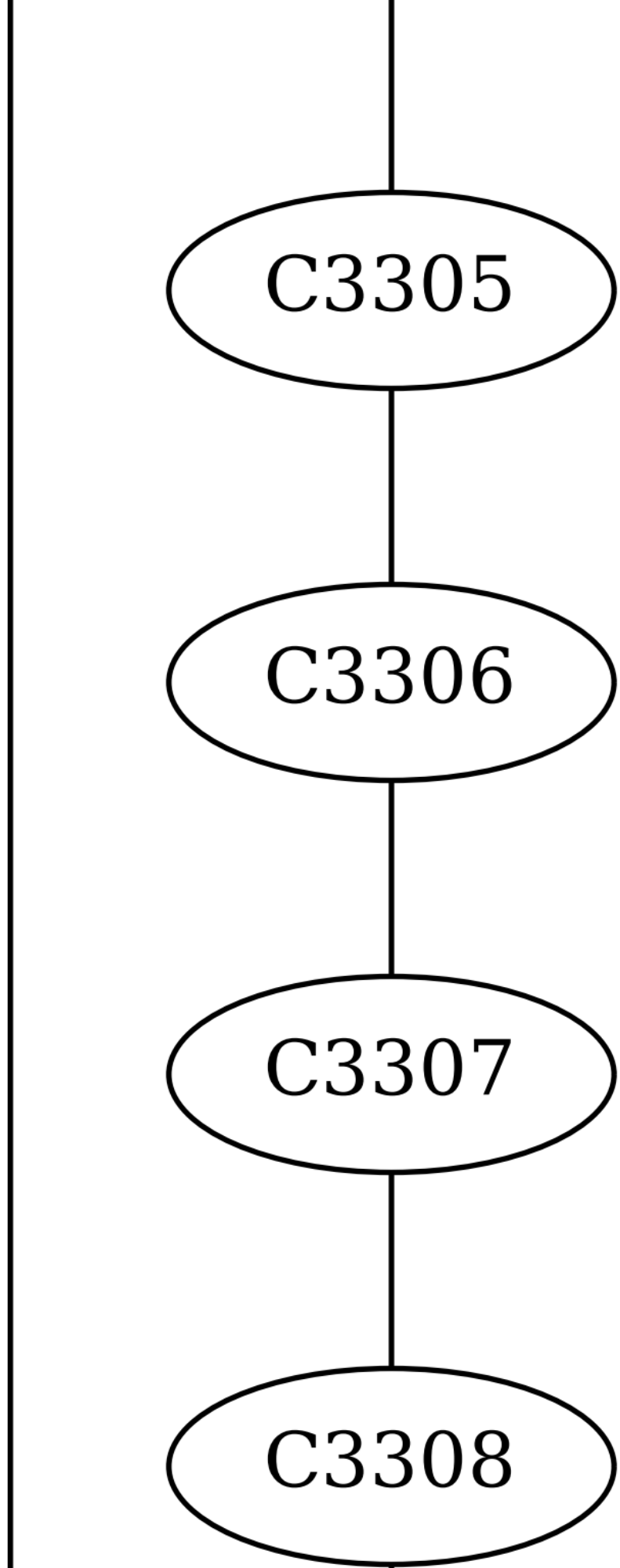
C3305
C3306
C3307
C3308

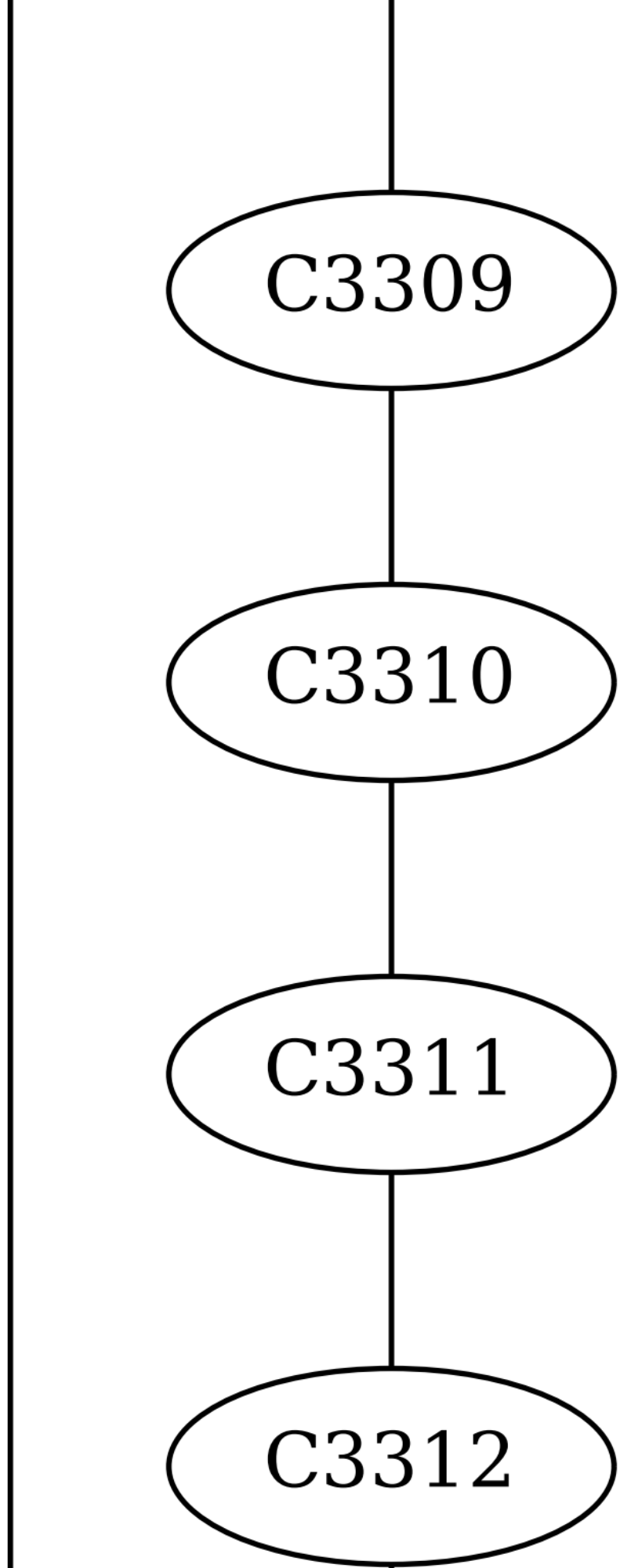
C3309
C3310
C3311
C3312

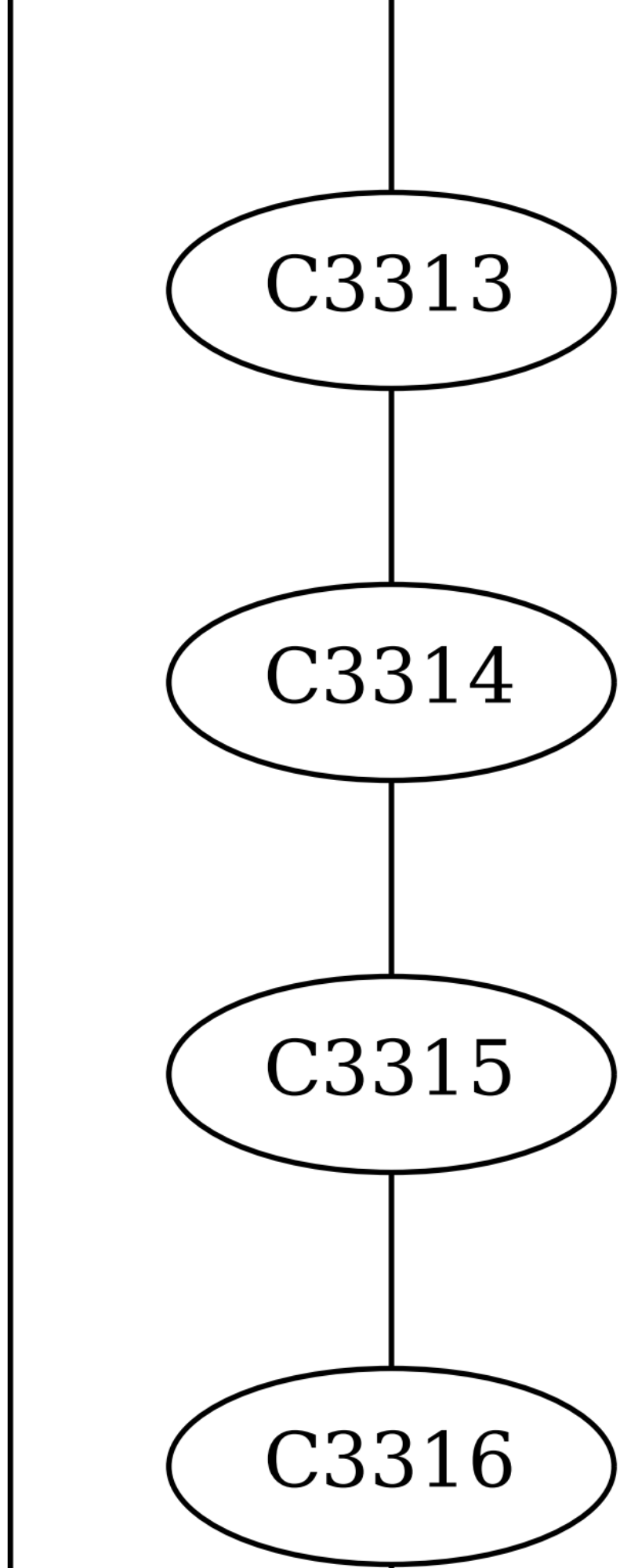
C3313
C3314
C3315
C3316

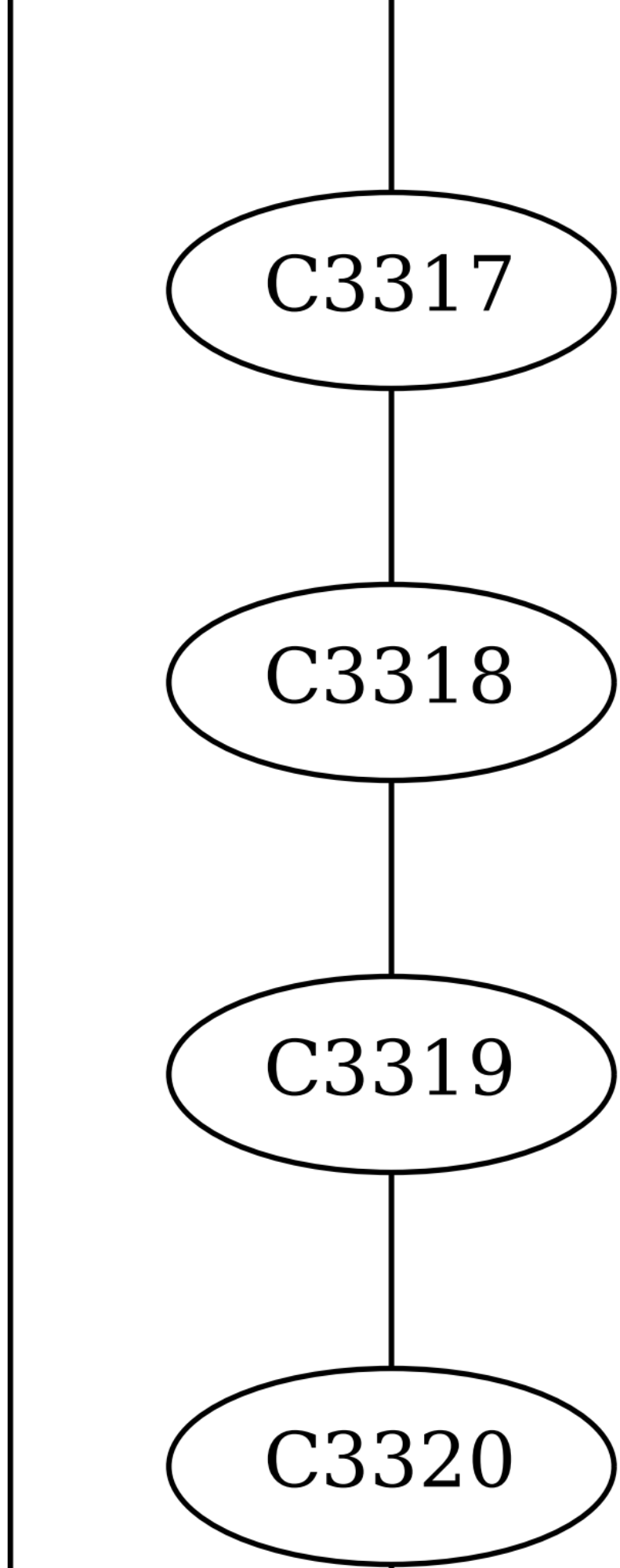
C3317
C3318
C3319
C3320

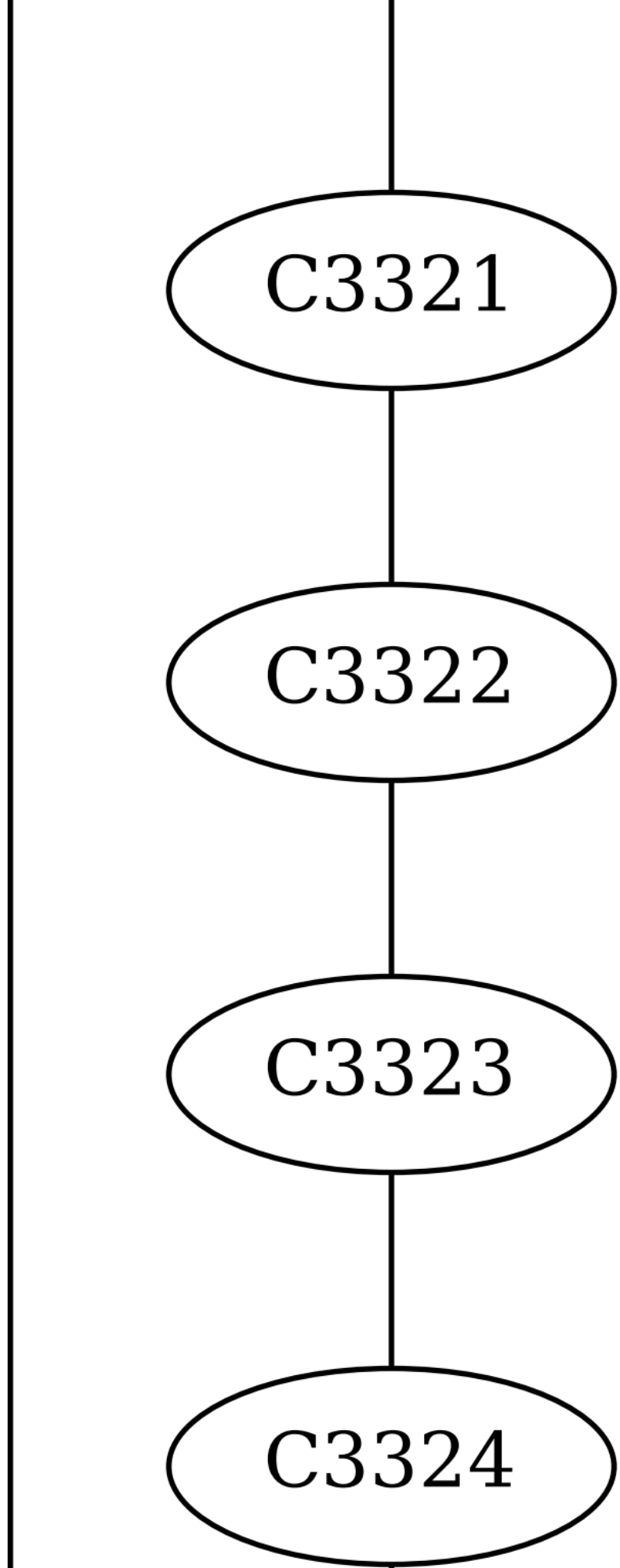
C3321
C3322
C3323
C3324

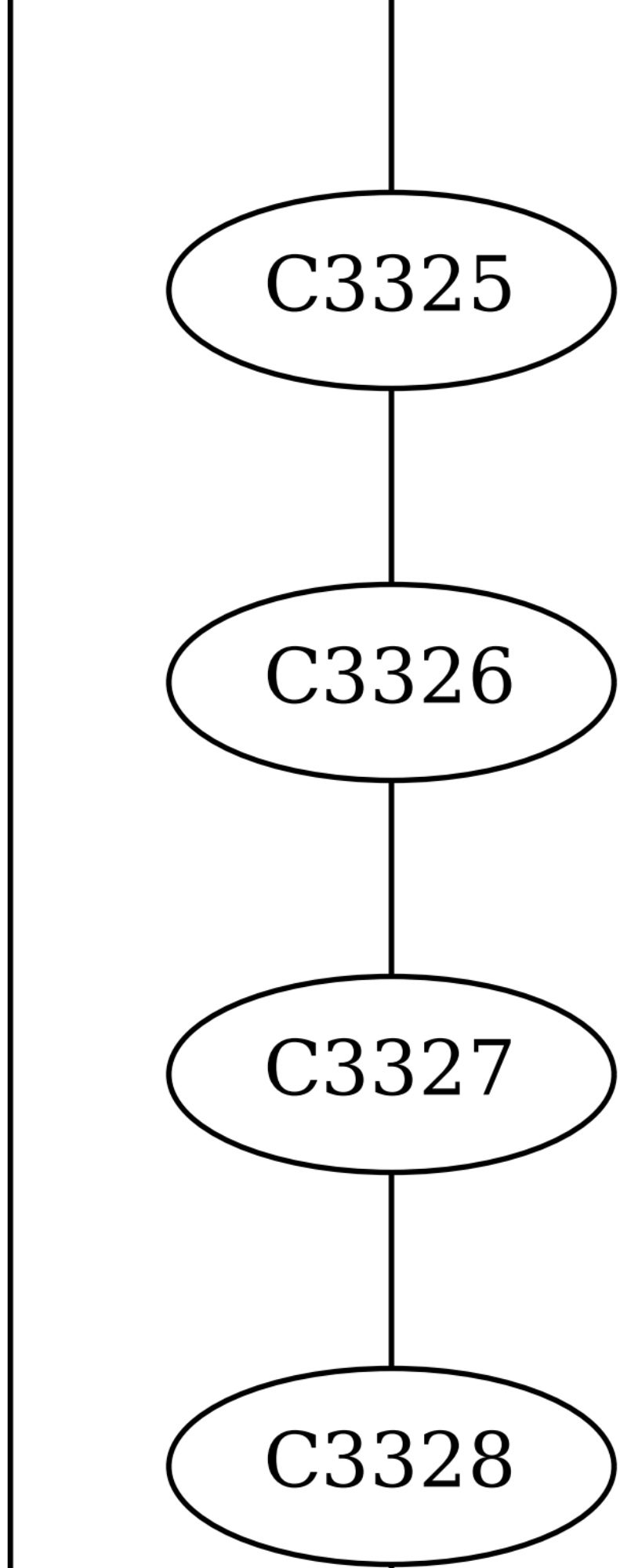
C3325
C3326
C3327
C3328

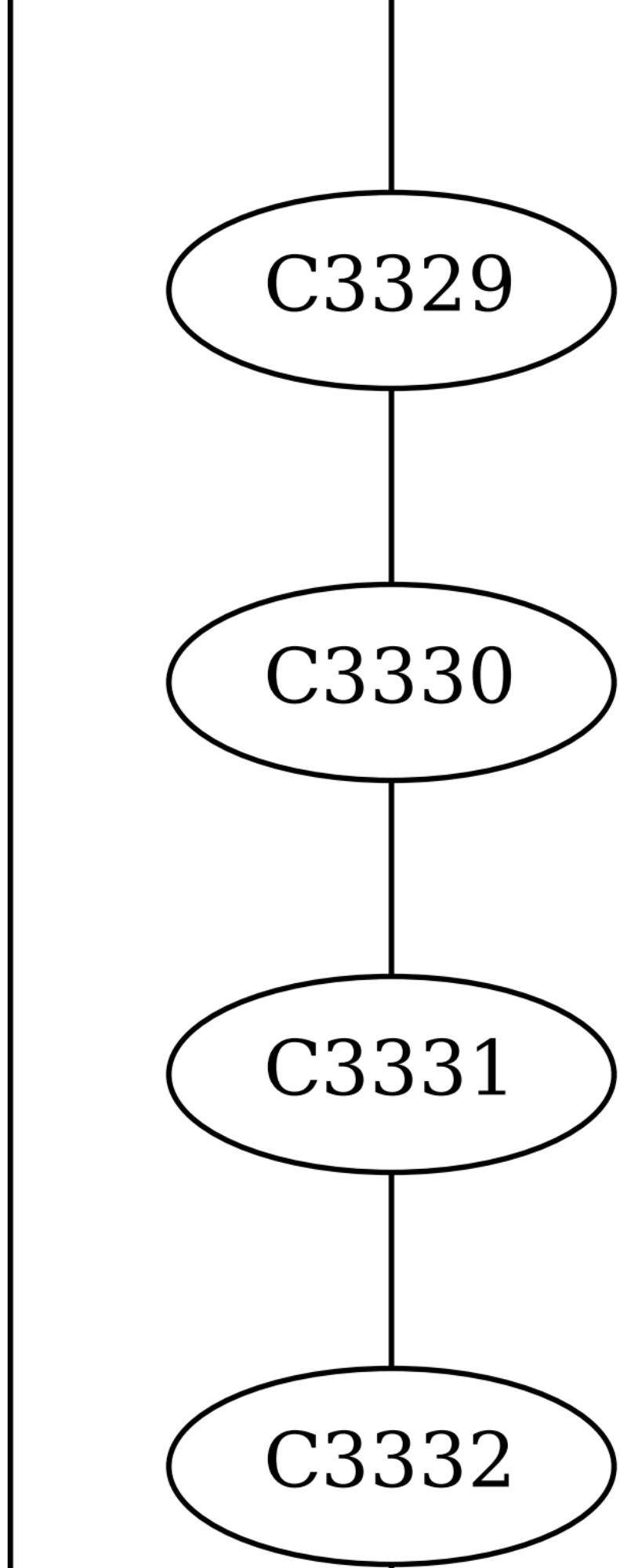
C3329
C3330
C3331
C3332

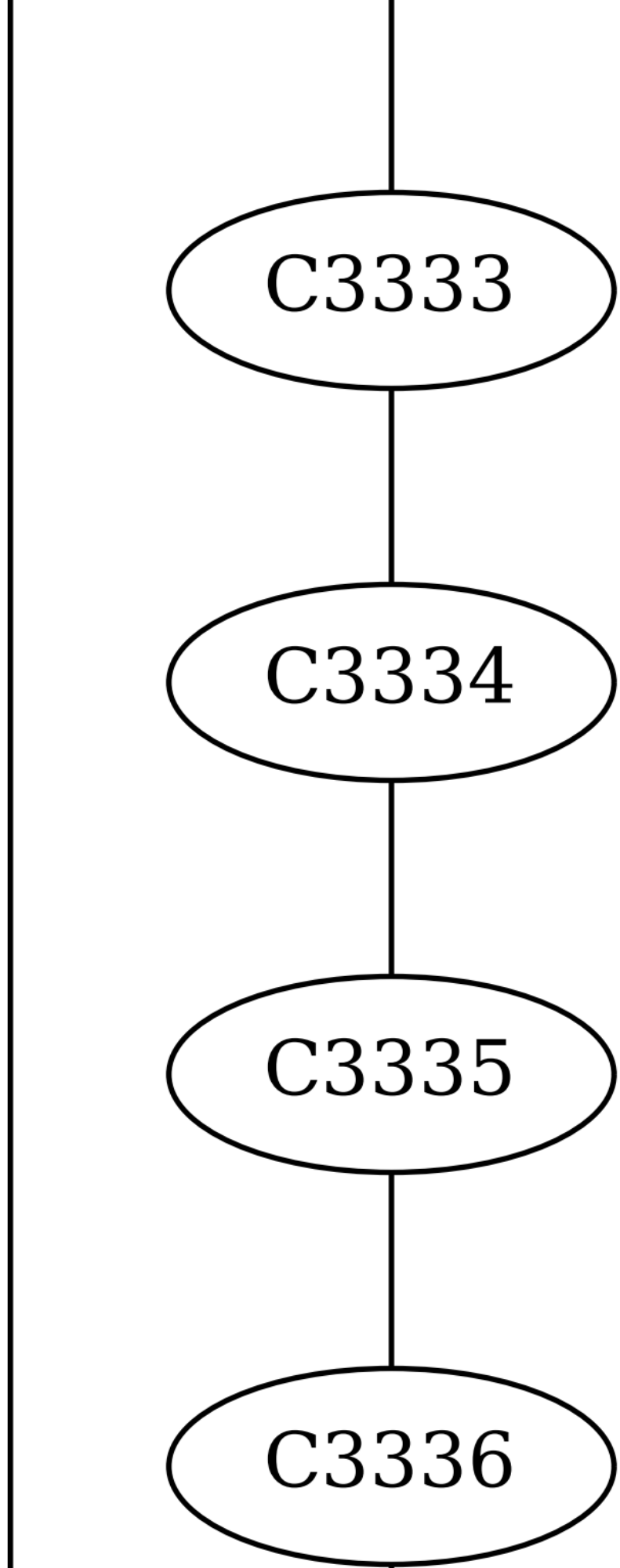
C3333
C3334
C3335
C3336

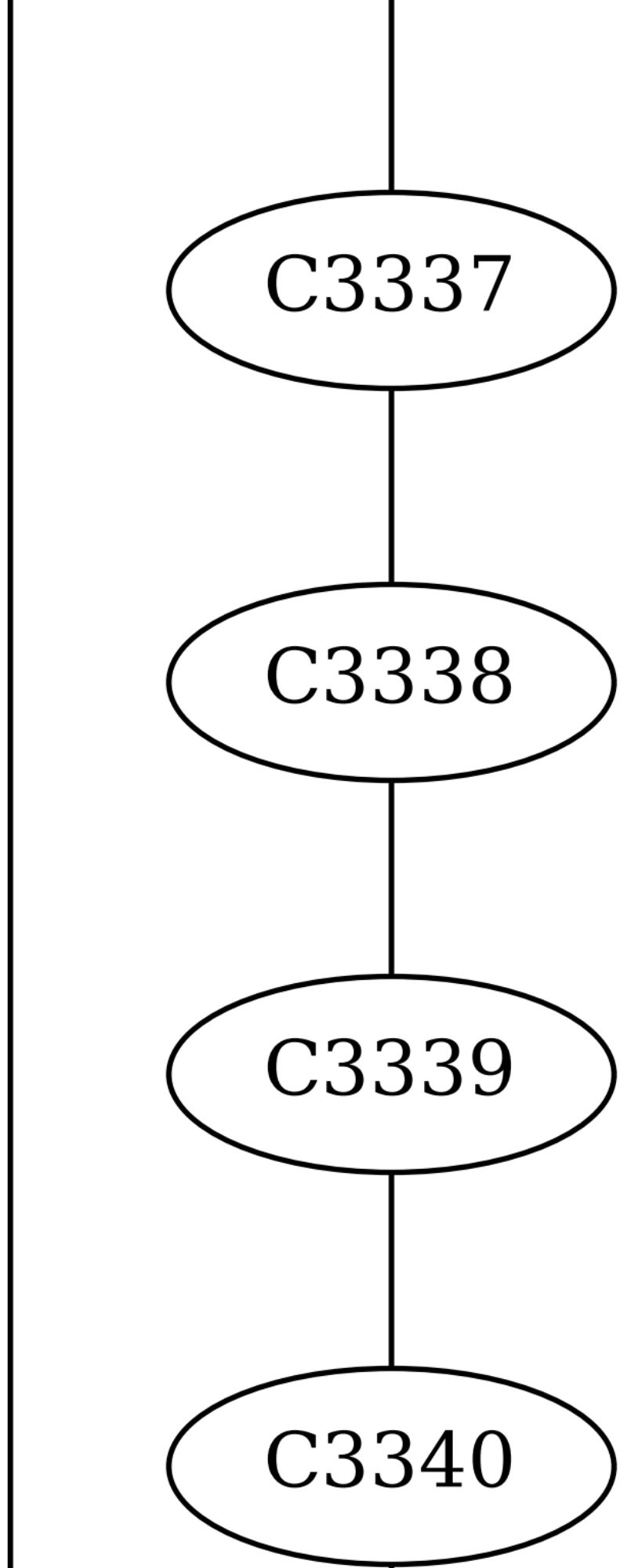
C3337
C3338
C3339
C3340

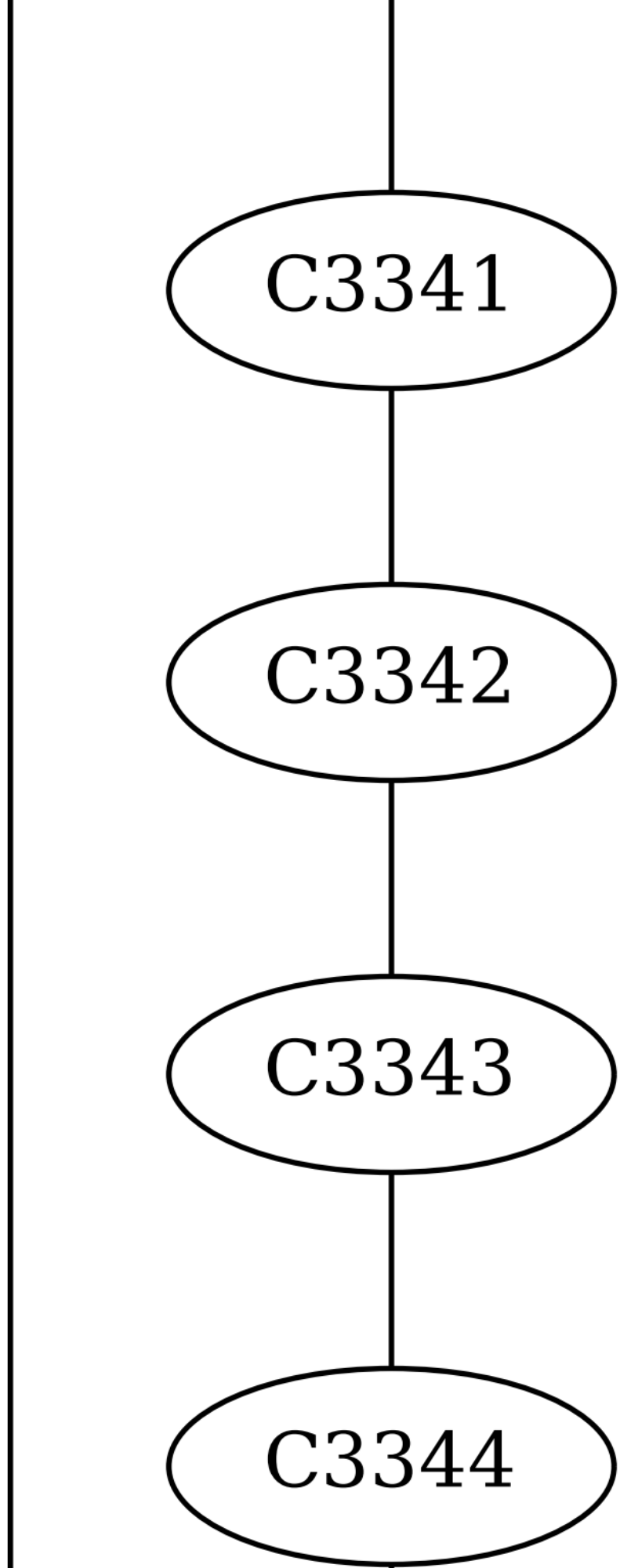
C3341
C3342
C3343
C3344

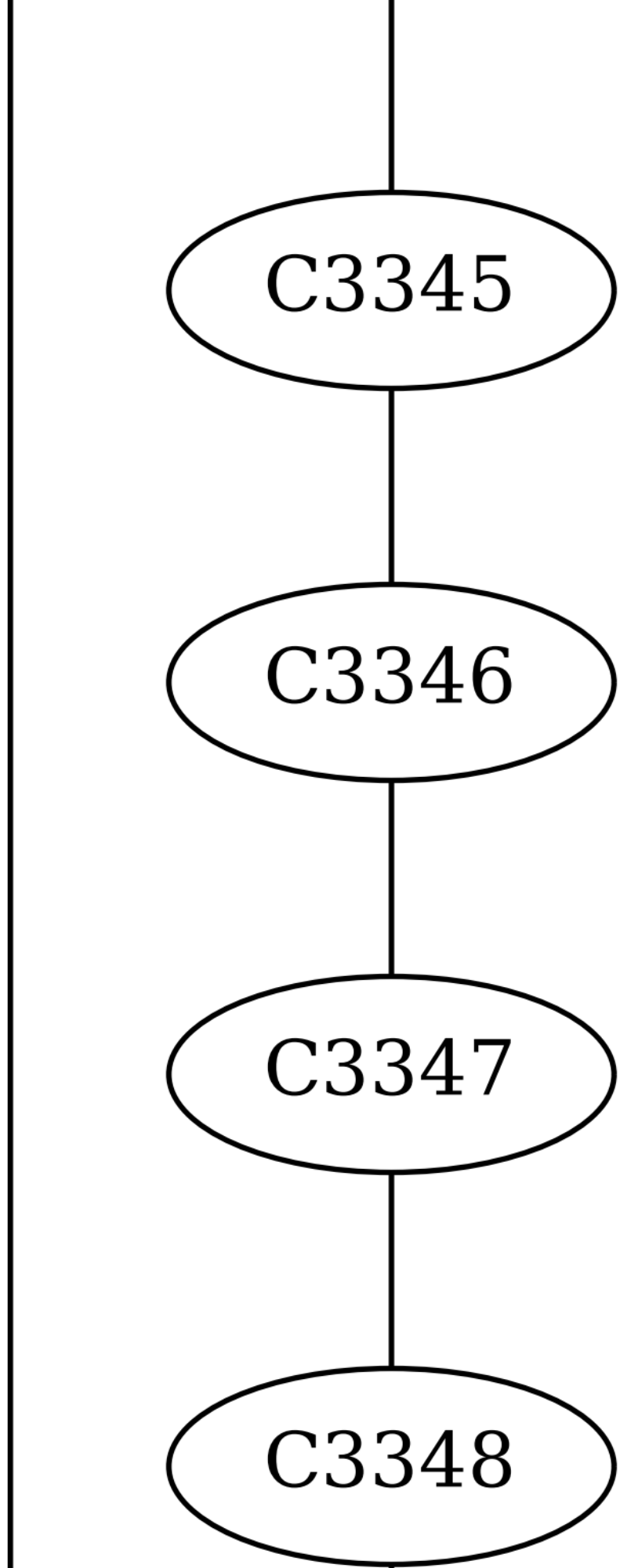
C3345
C3346
C3347
C3348

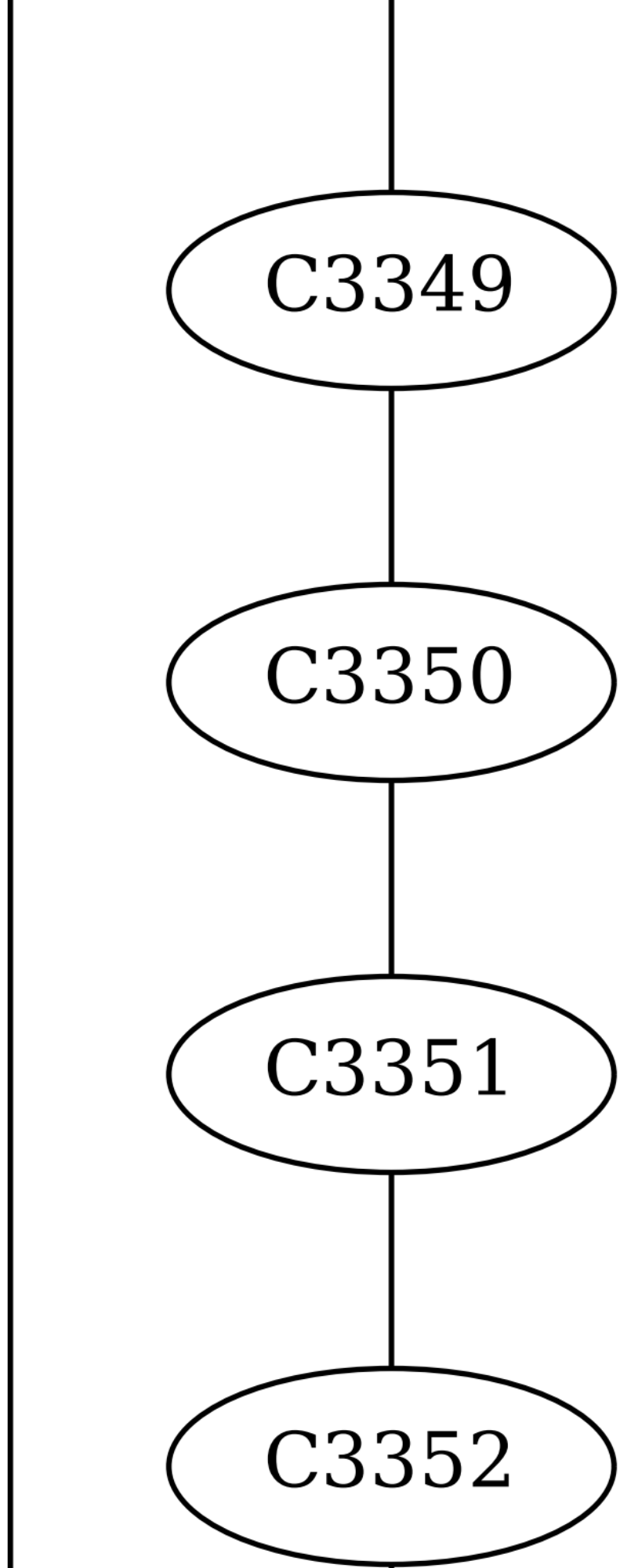
C3349
C3350
C3351
C3352

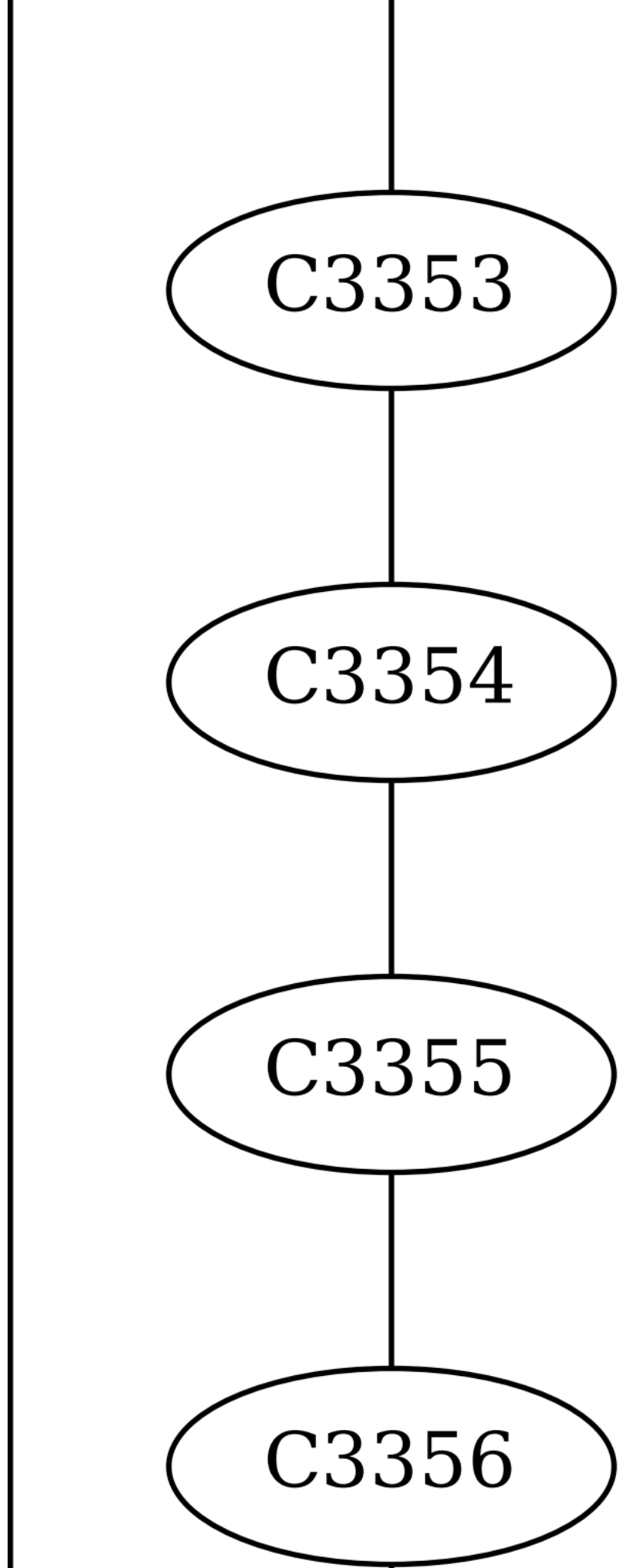
C3353
C3354
C3355
C3356

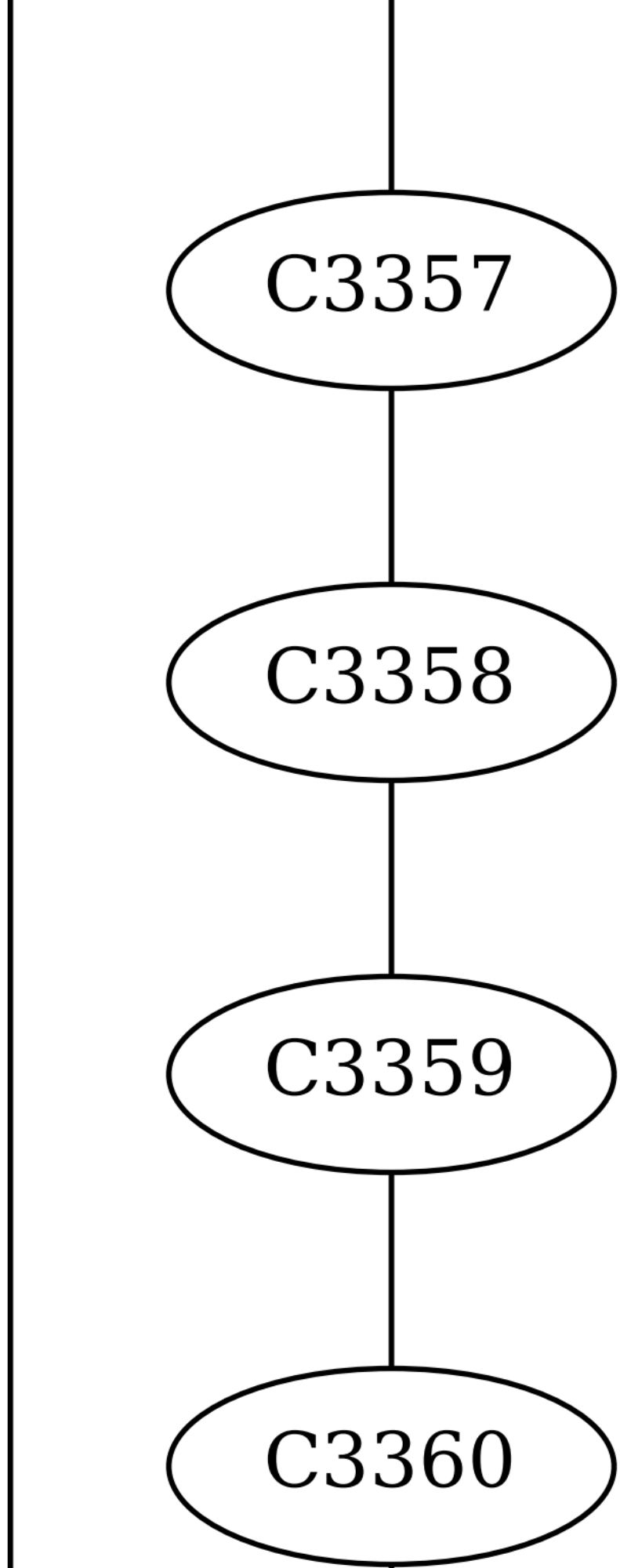
C3357
C3358
C3359
C3360

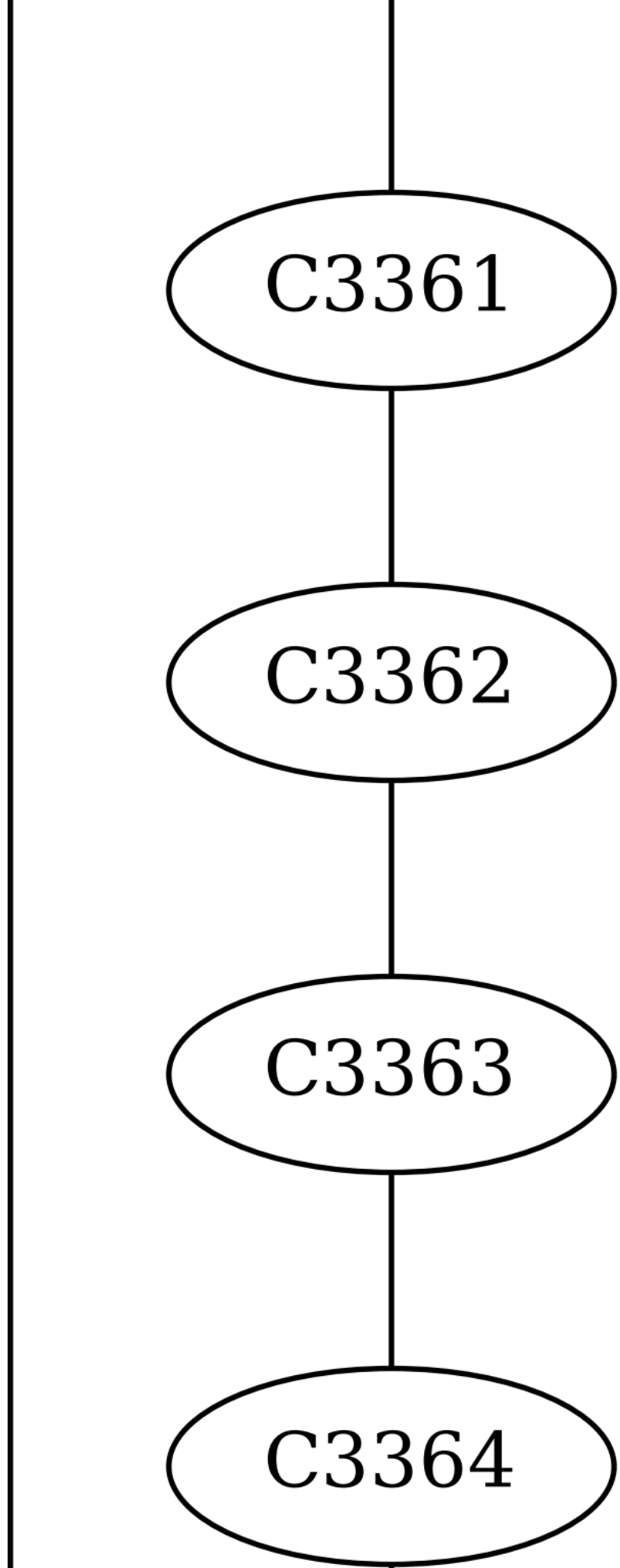
C3361
C3362
C3363
C3364

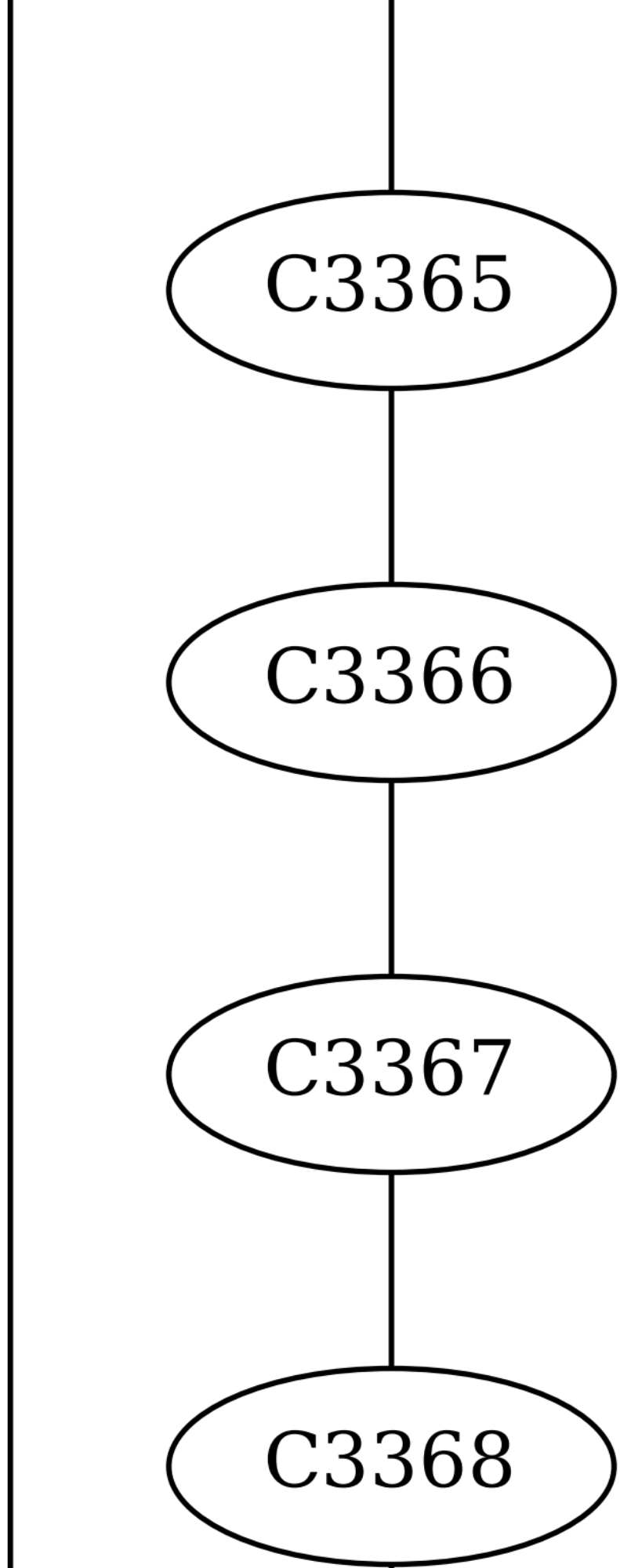
C3365
C3366
C3367
C3368

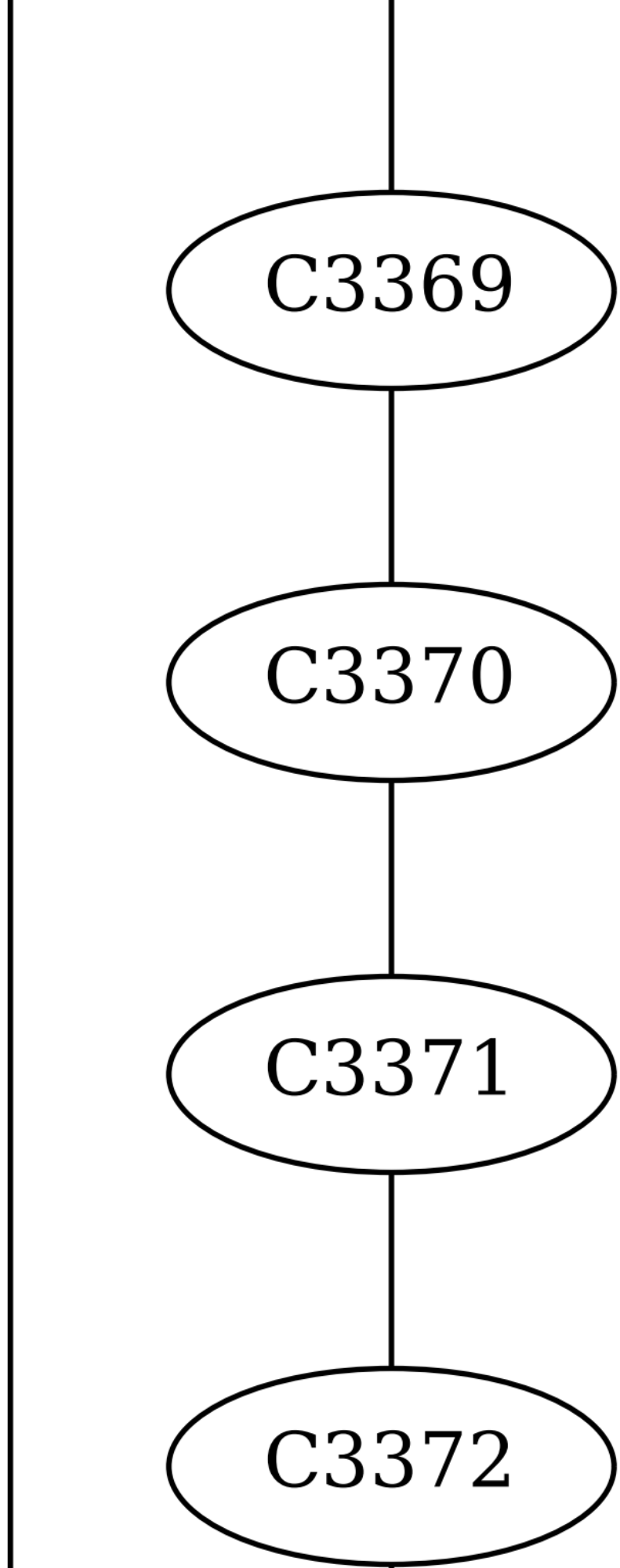
C3369
C3370
C3371
C3372

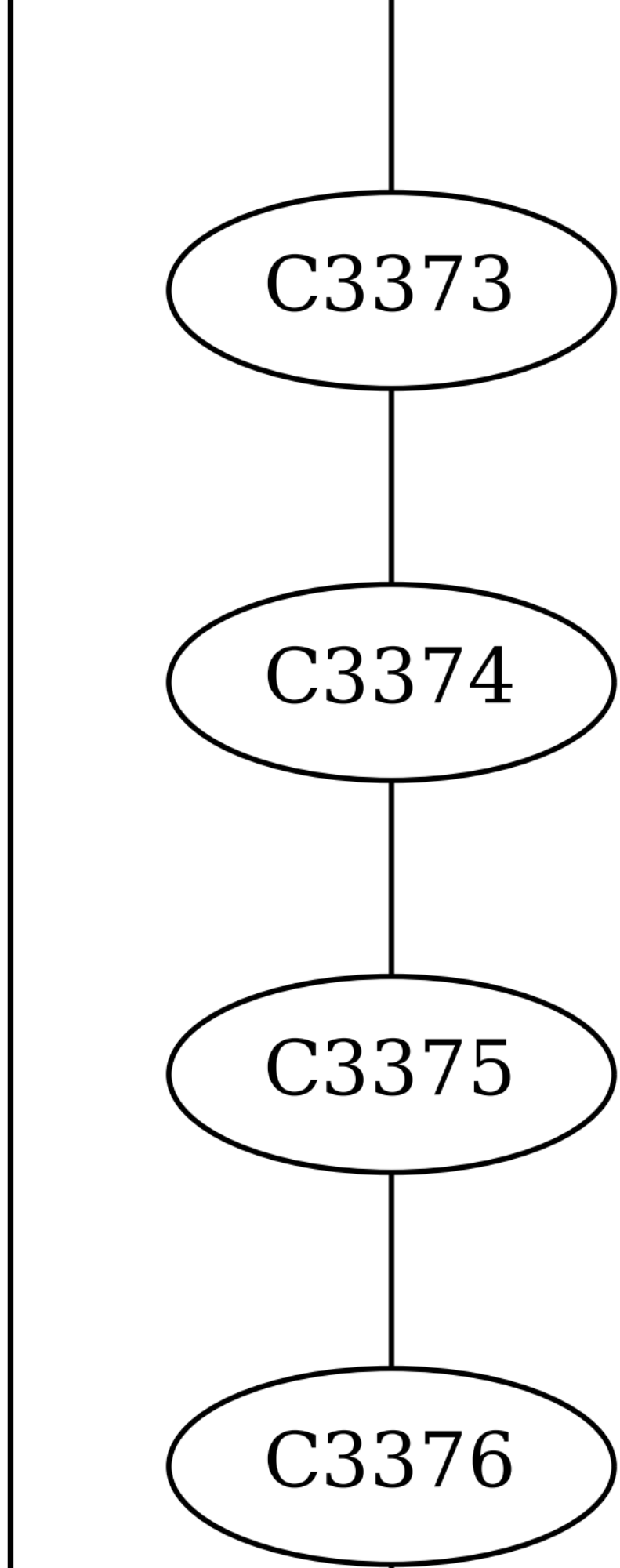
C3373
C3374
C3375
C3376

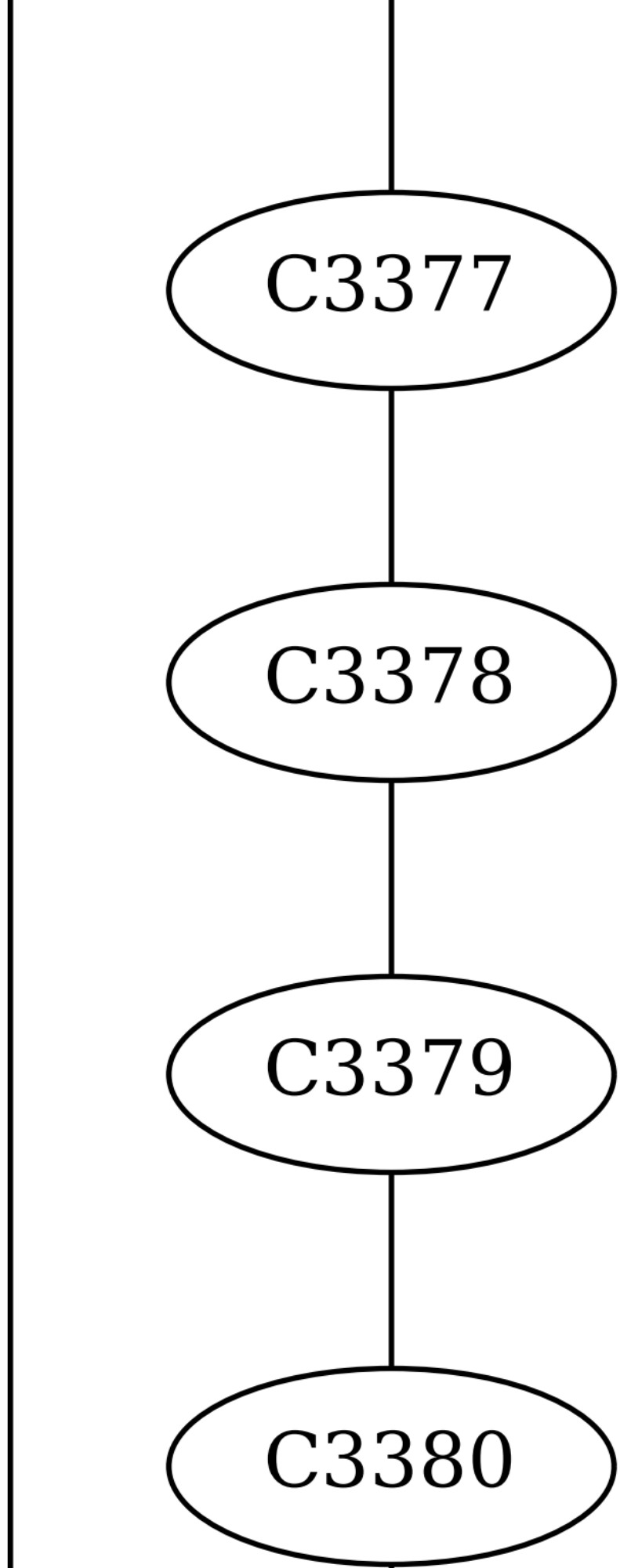
C3377
C3378
C3379
C3380

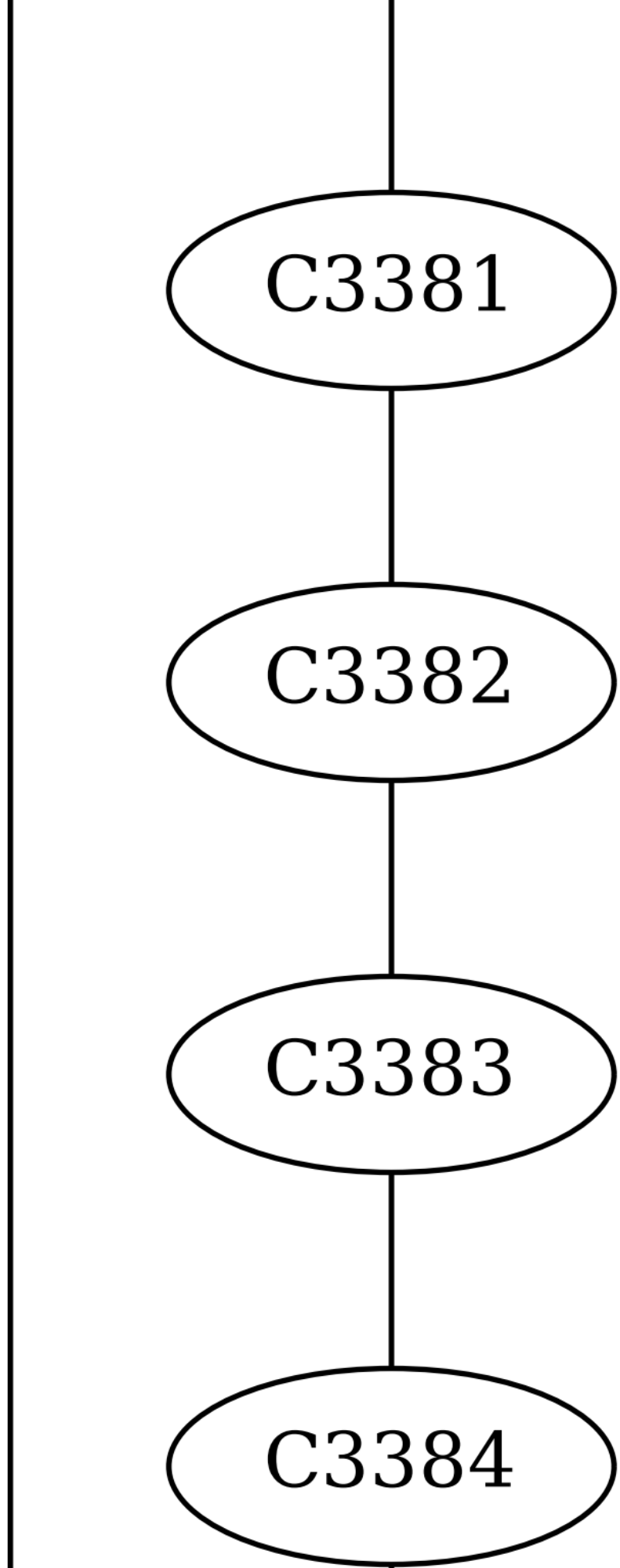
C3381
C3382
C3383
C3384

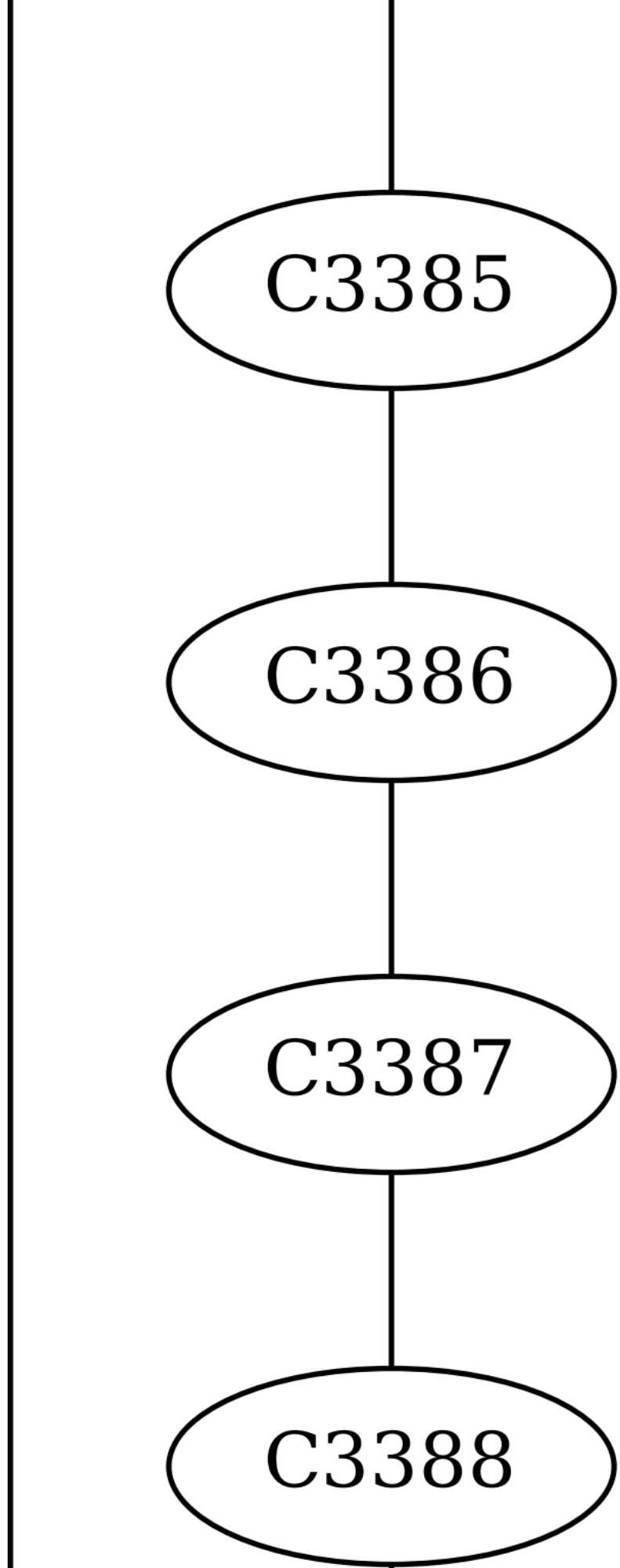
C3385
C3386
C3387
C3388

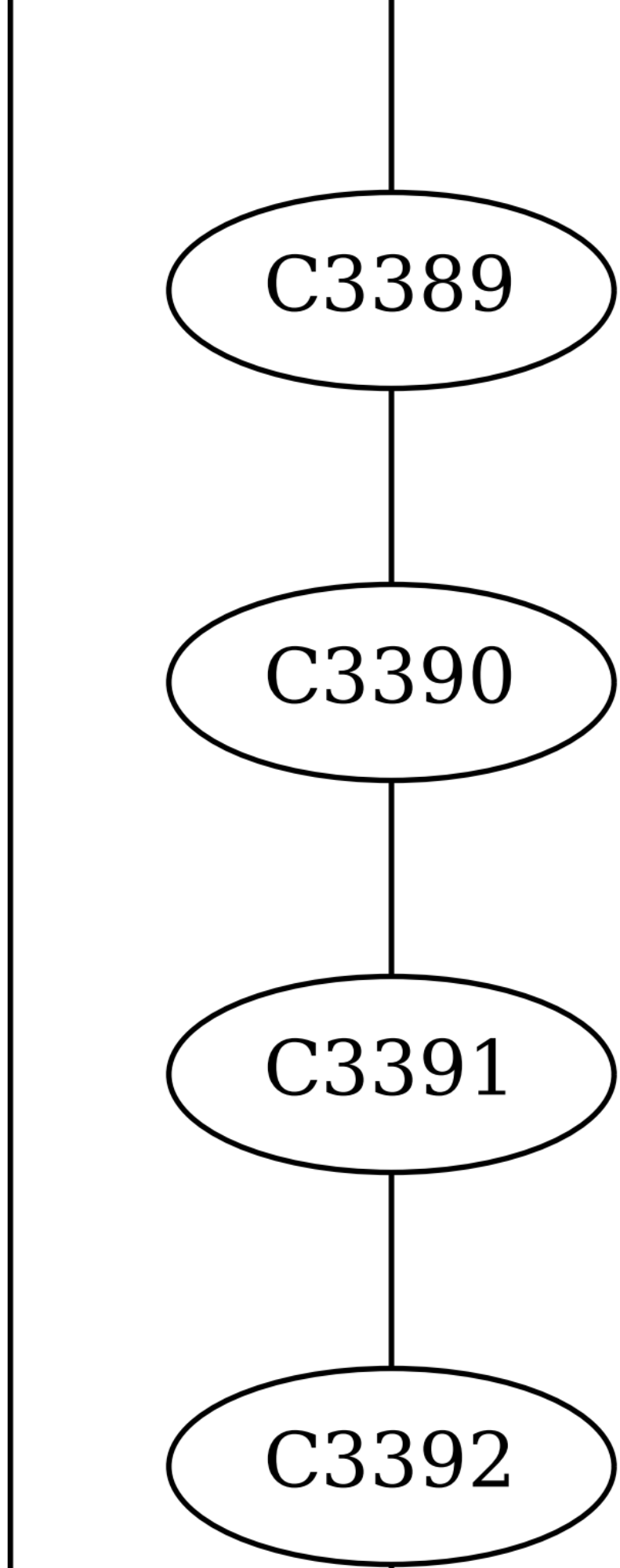
C3389
C3390
C3391
C3392

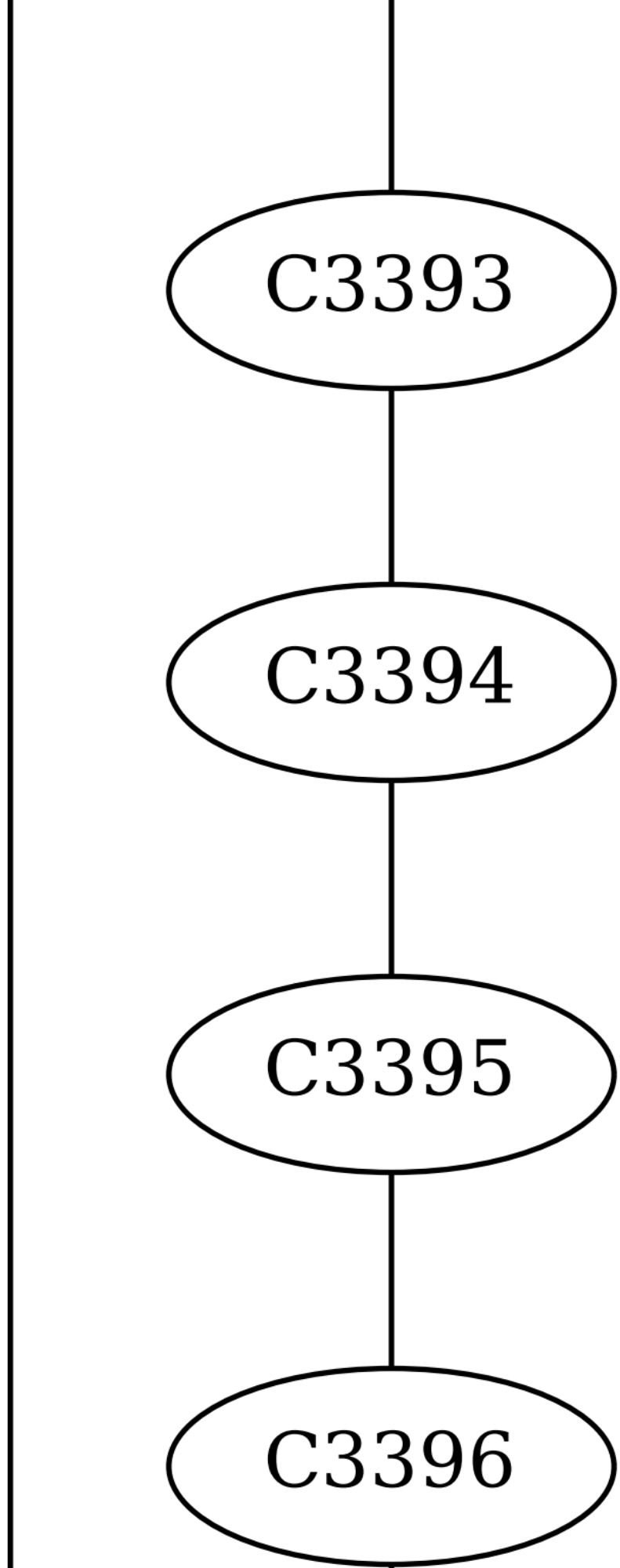
C3393
C3394
C3395
C3396

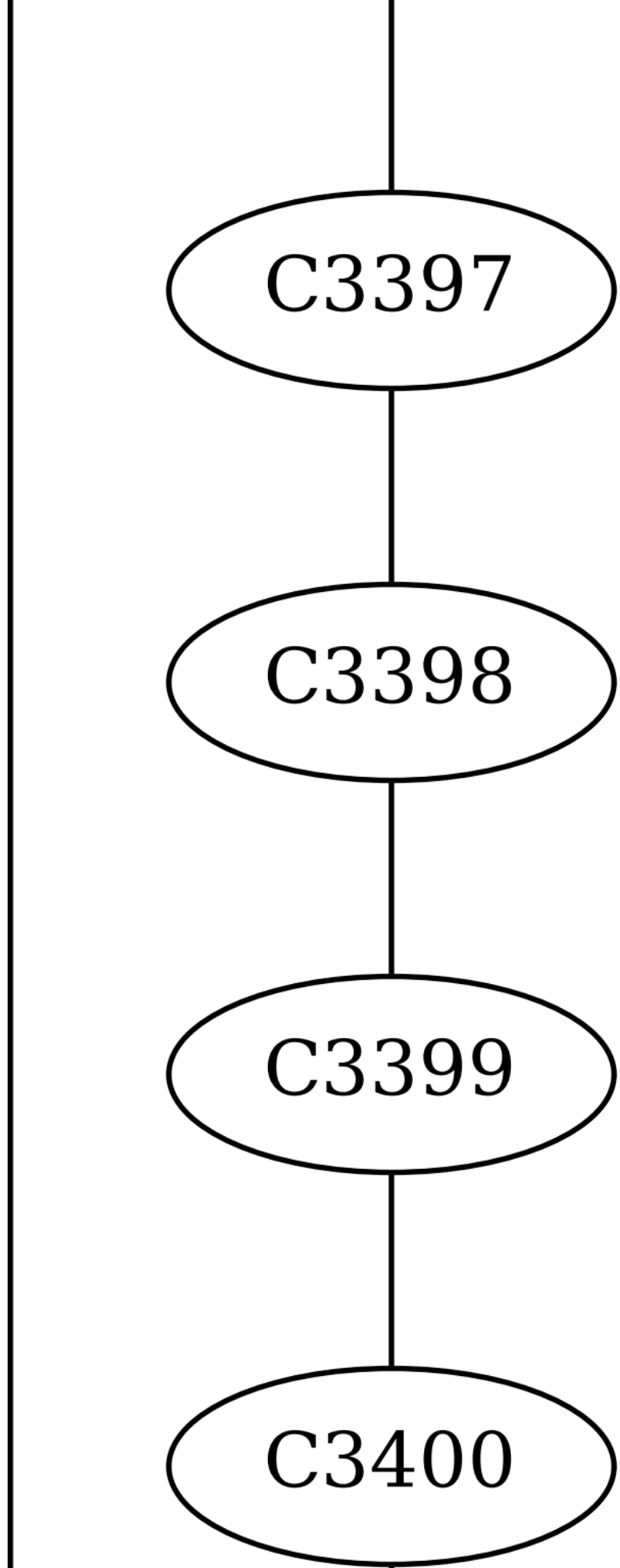
C3397
C3398
C3399
C3400

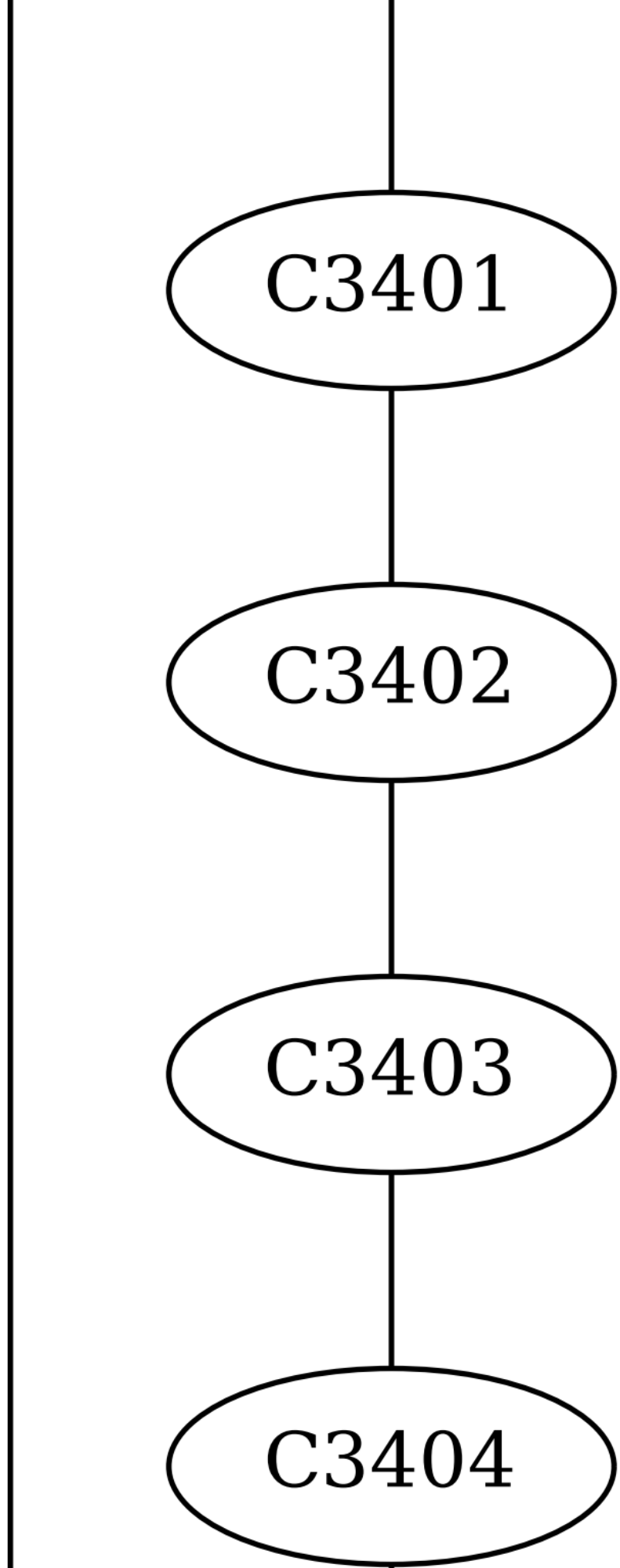
C3401
C3402
C3403
C3404

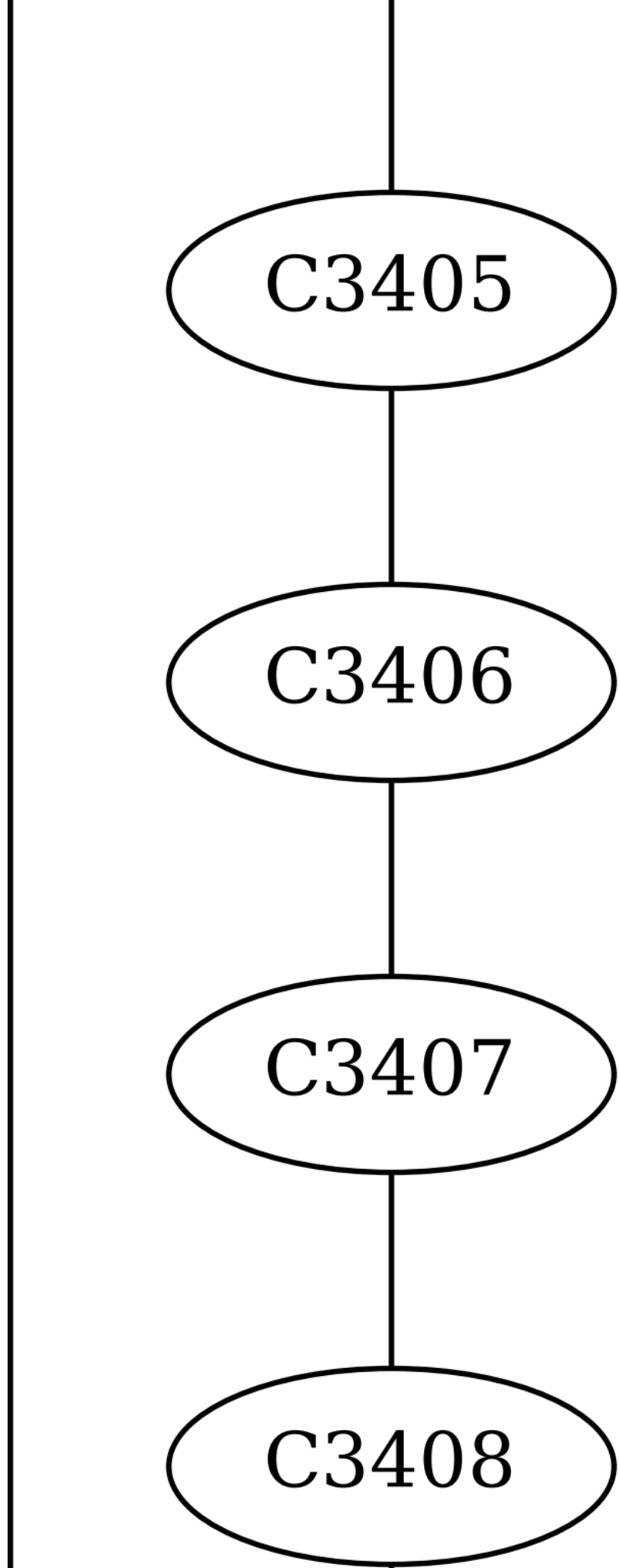
C3405
C3406
C3407
C3408

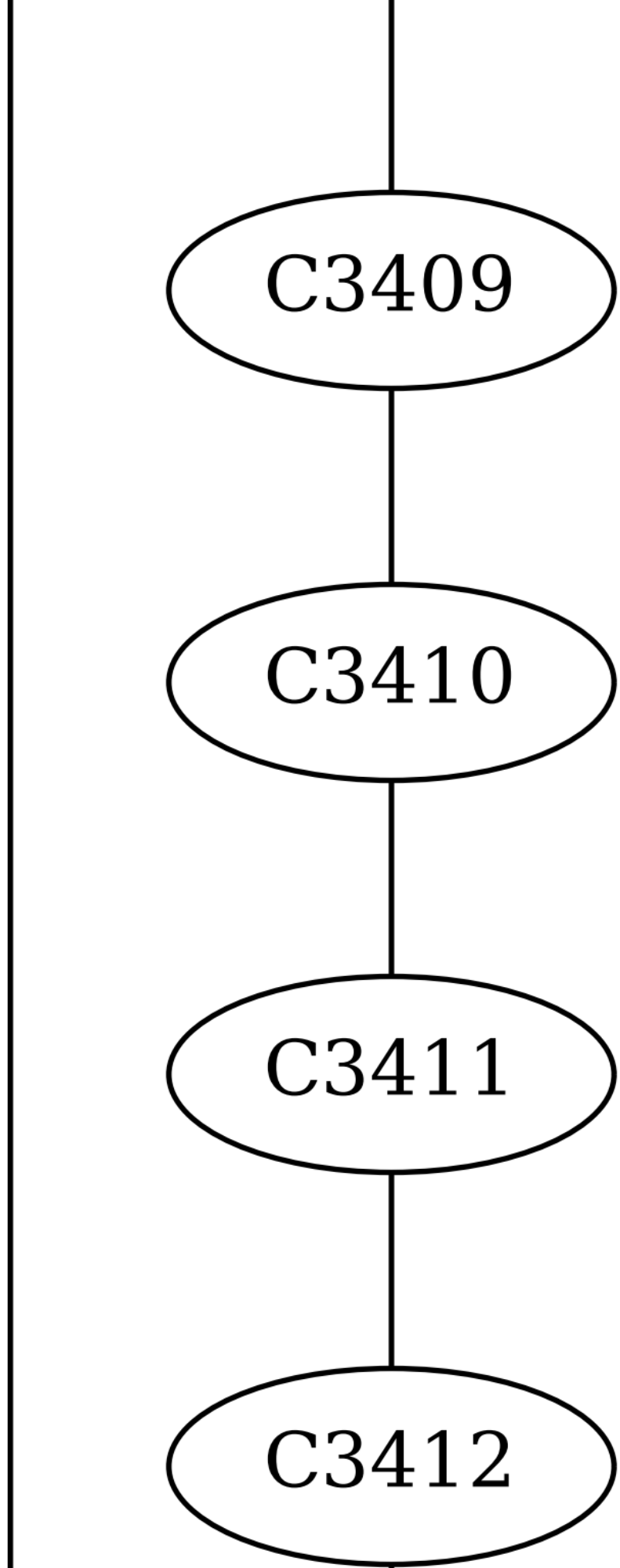
C3409
C3410
C3411
C3412

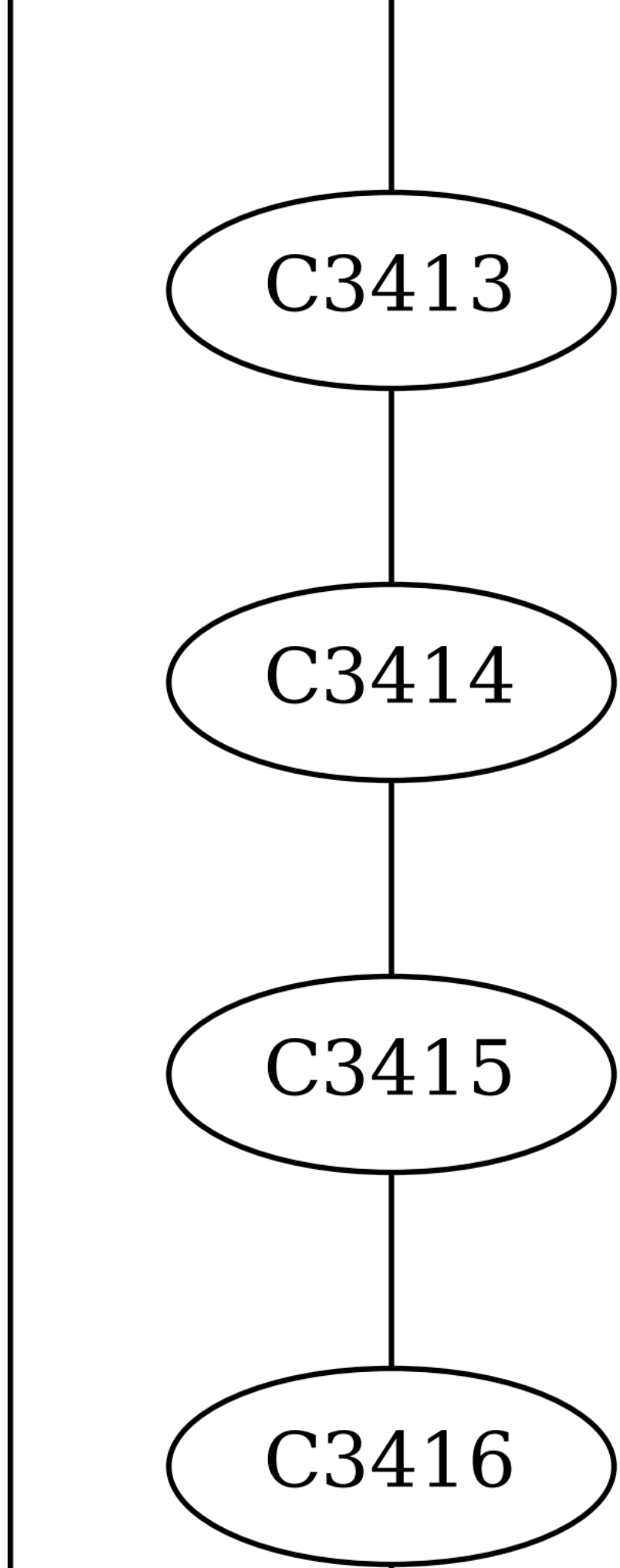
C3413
C3414
C3415
C3416

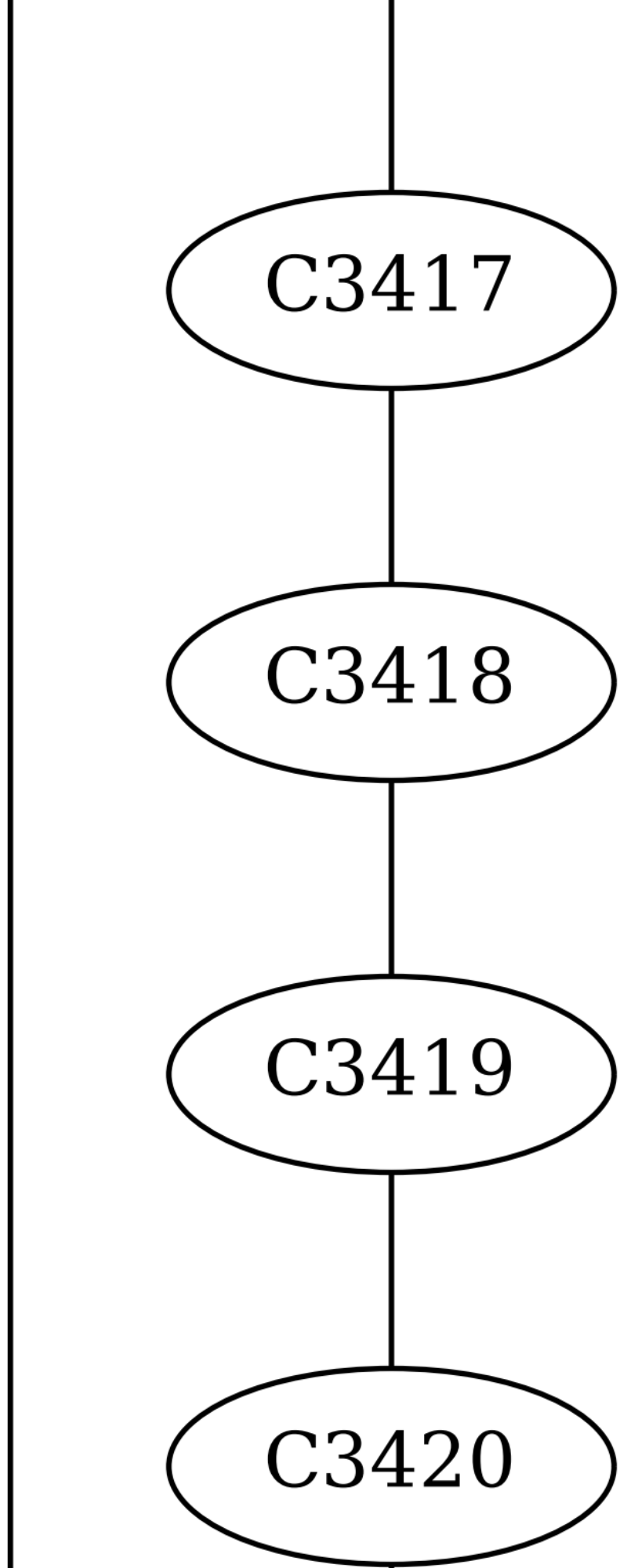
C3417
C3418
C3419
C3420

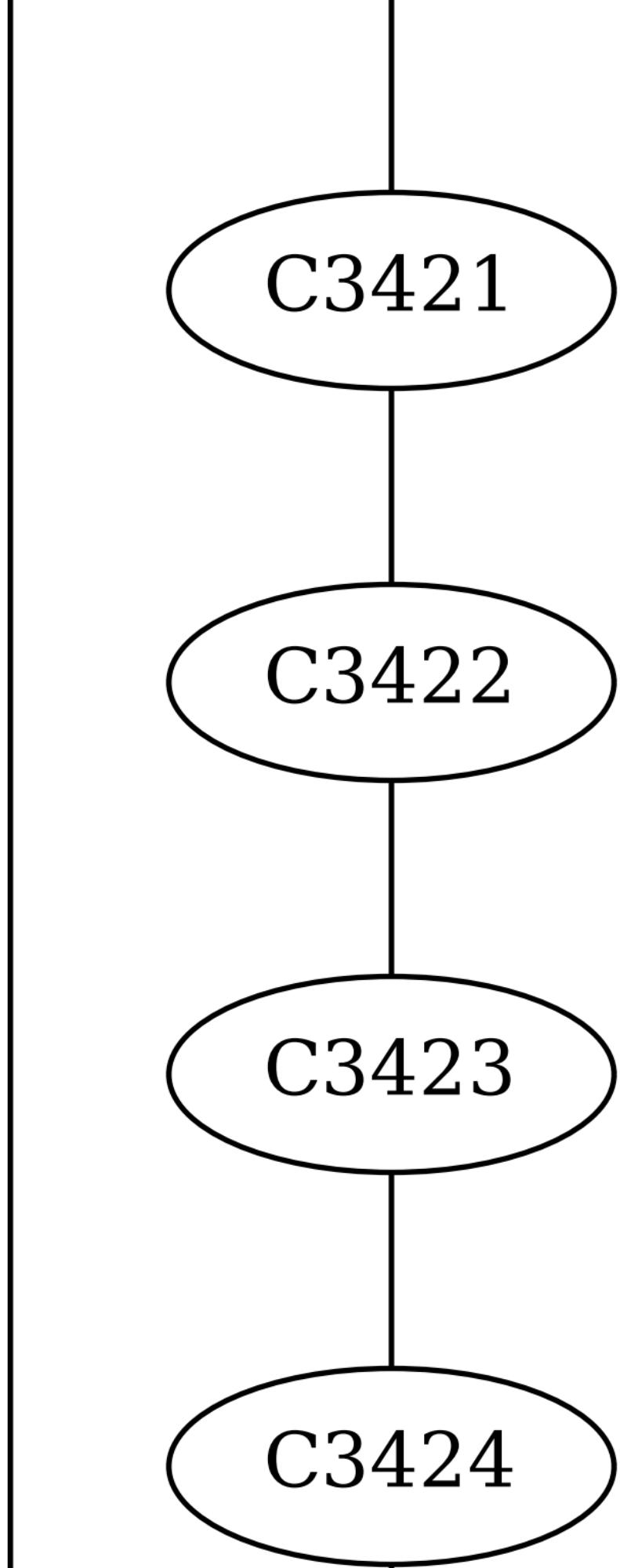
C3421
C3422
C3423
C3424

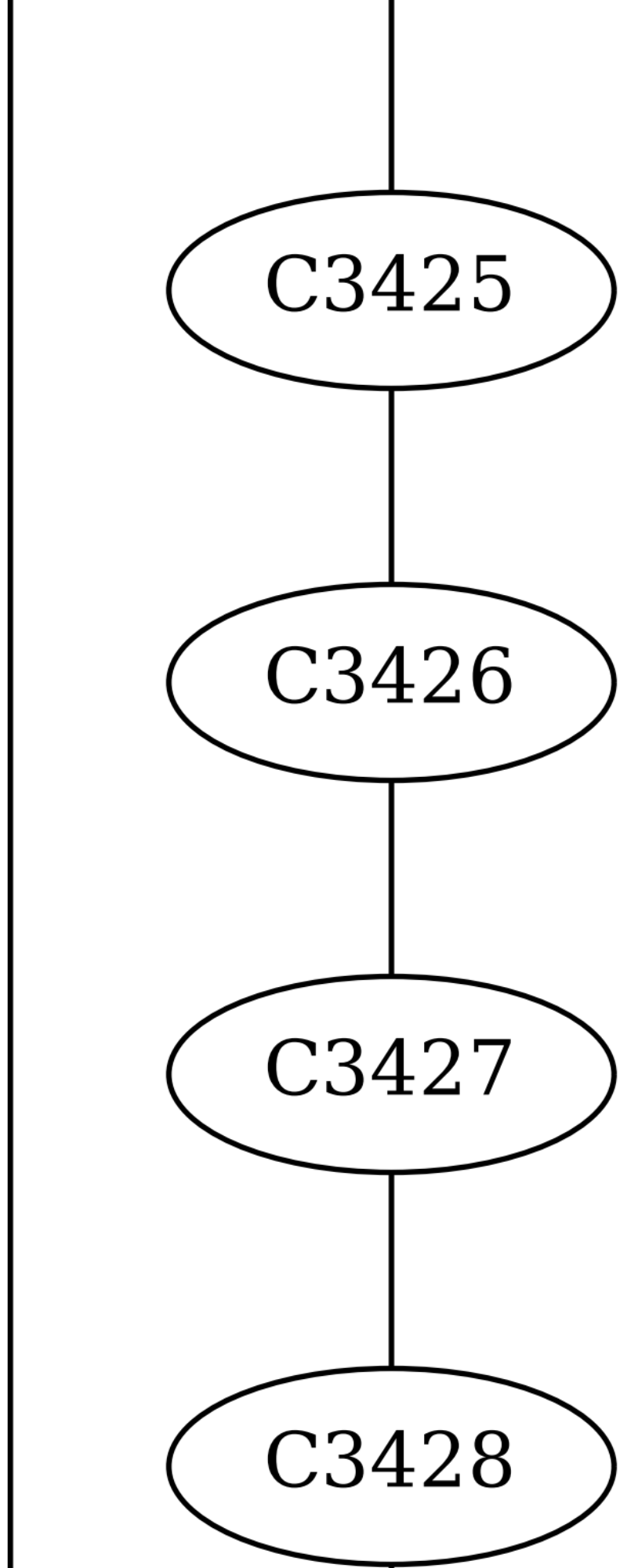
C3425
C3426
C3427
C3428

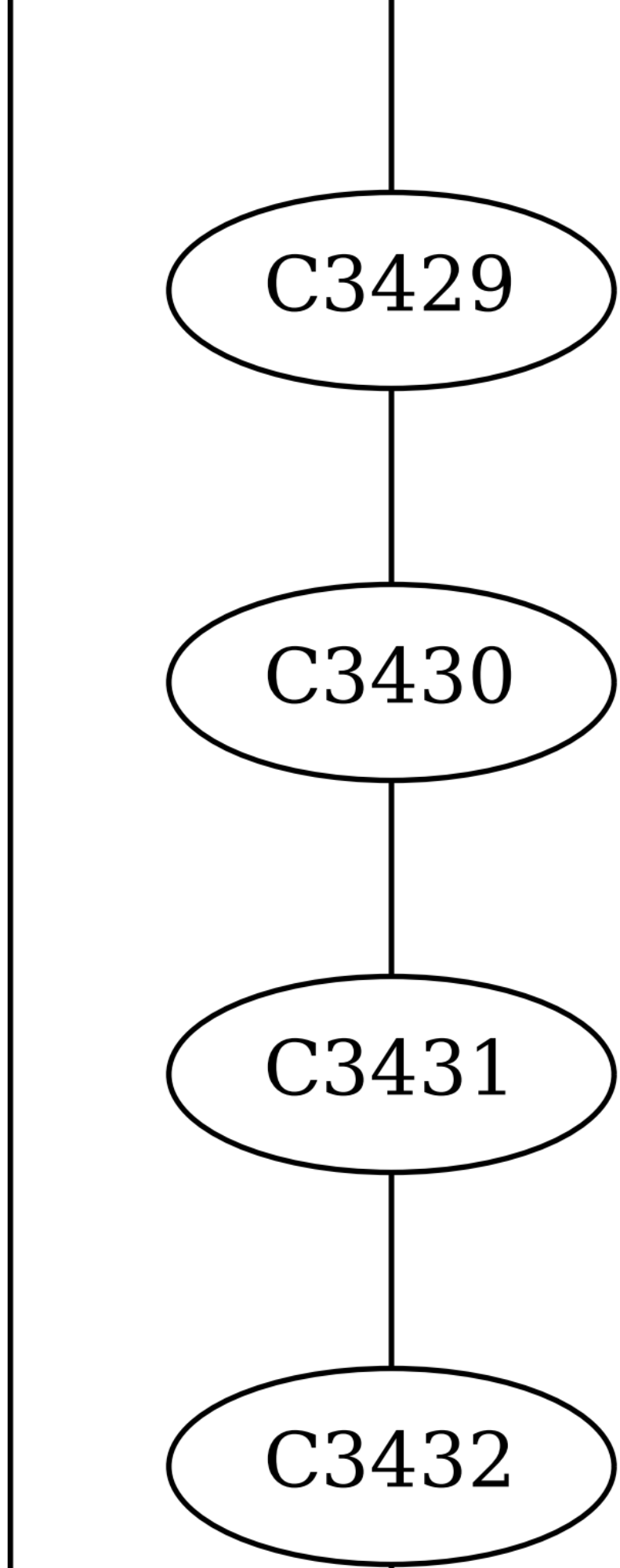
C3429
C3430
C3431
C3432

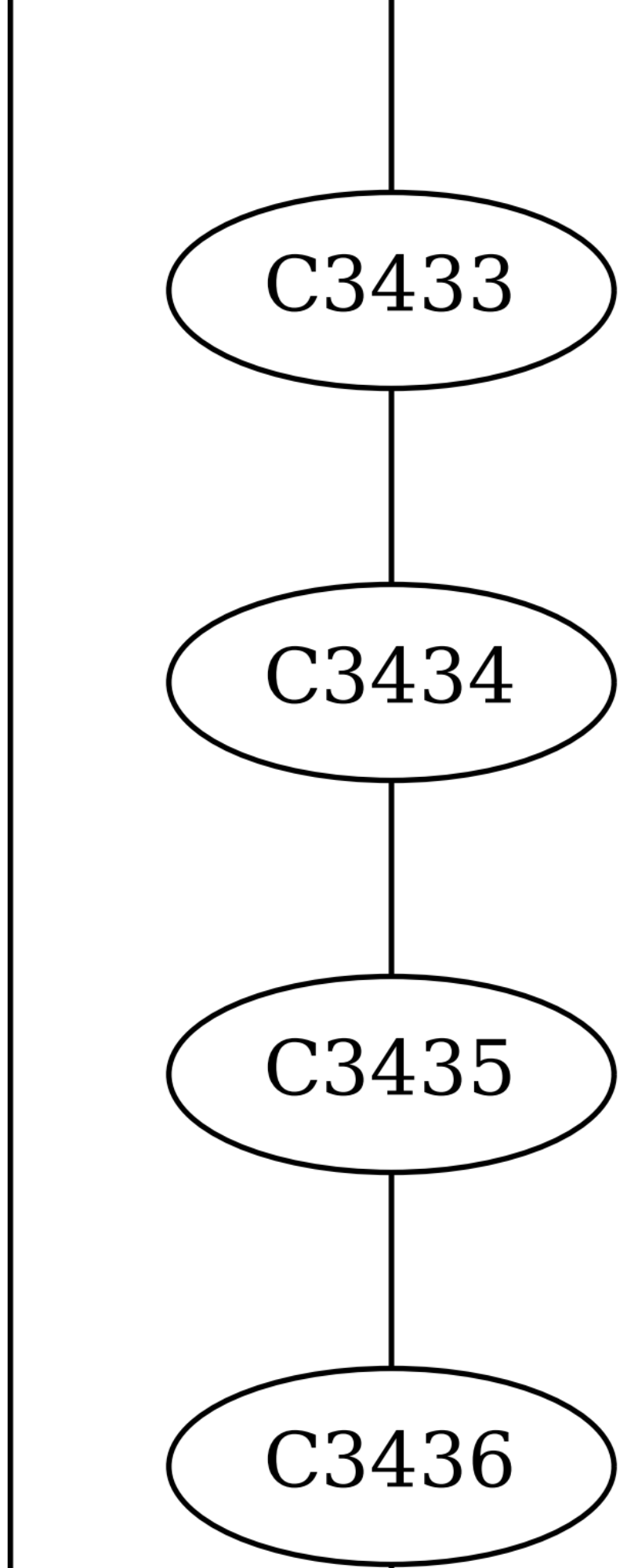
C3433
C3434
C3435
C3436

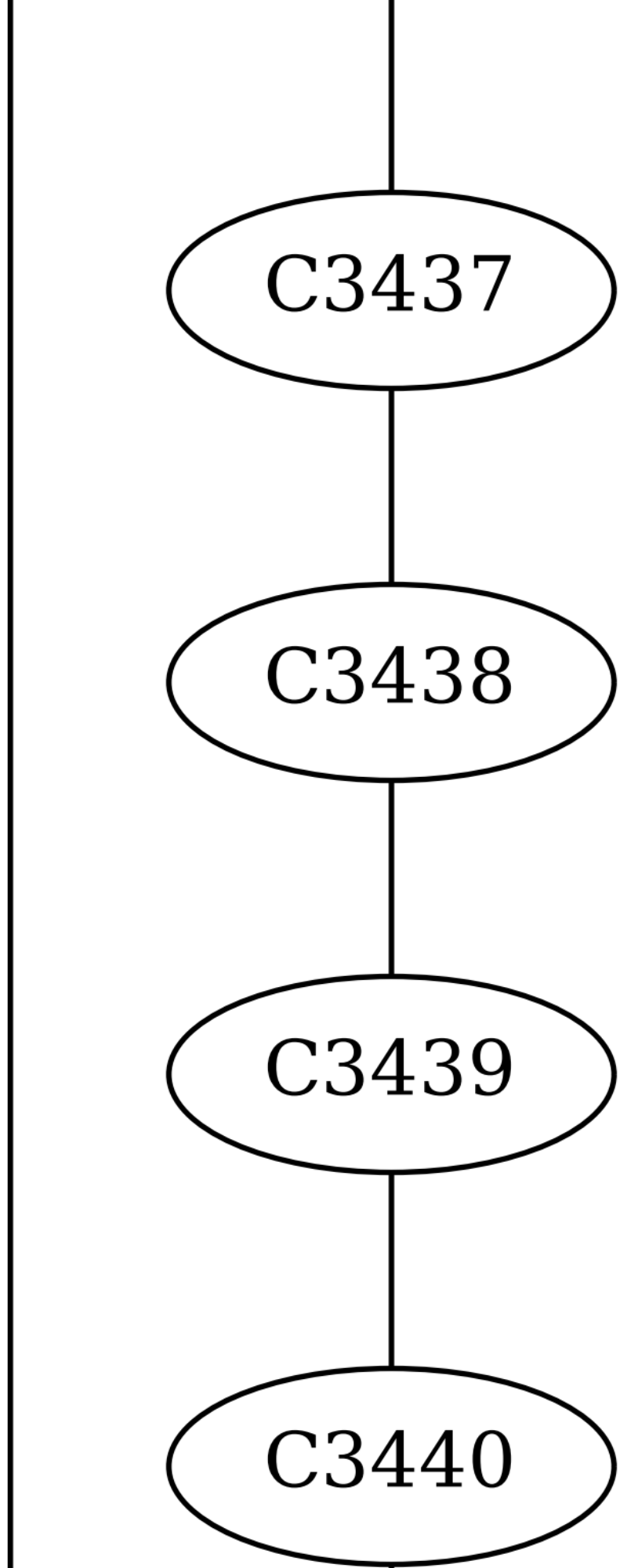
C3437
C3438
C3439
C3440

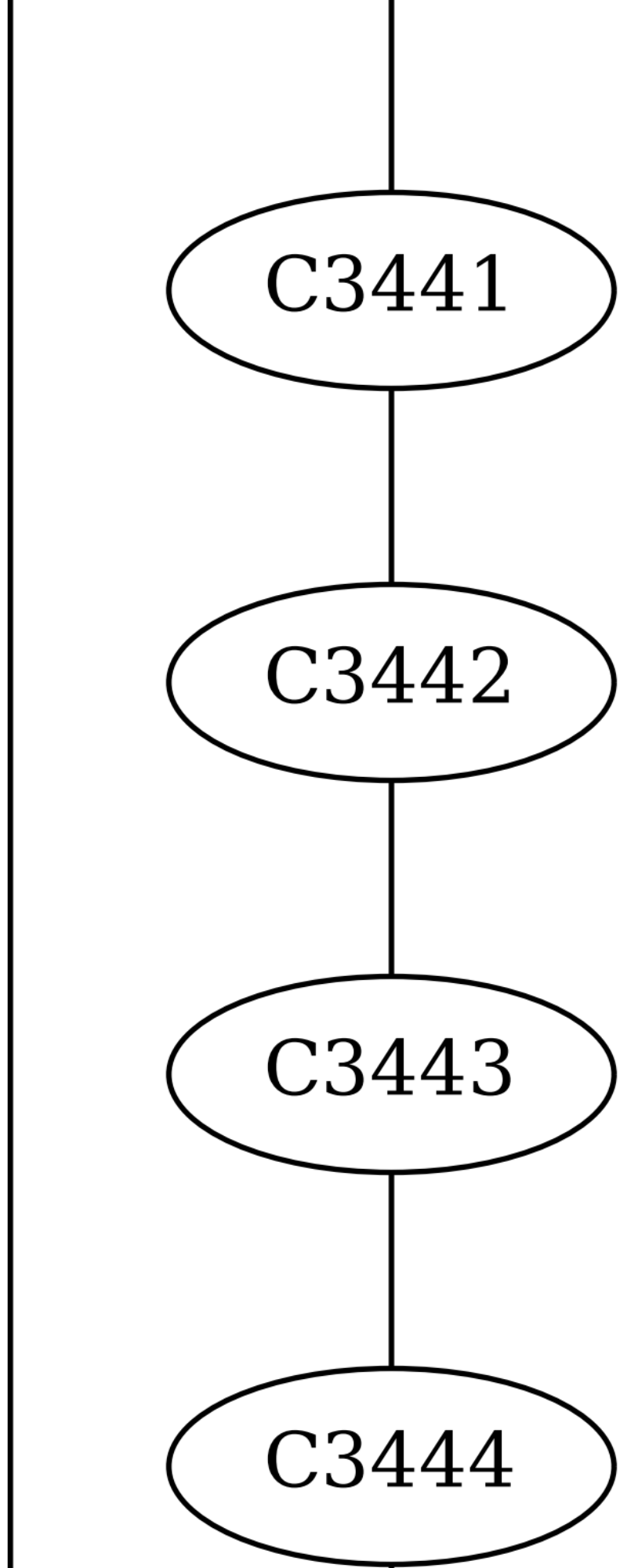
C3441
C3442
C3443
C3444

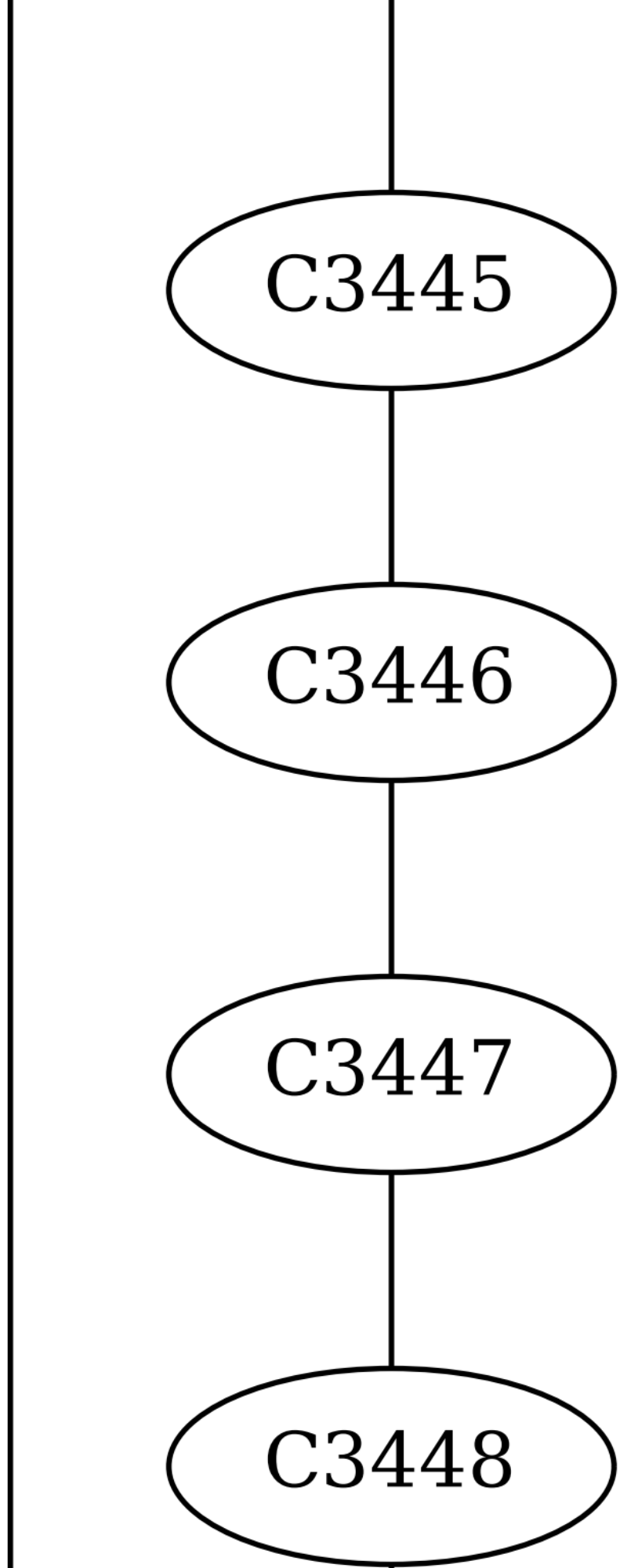
C3445
C3446
C3447
C3448

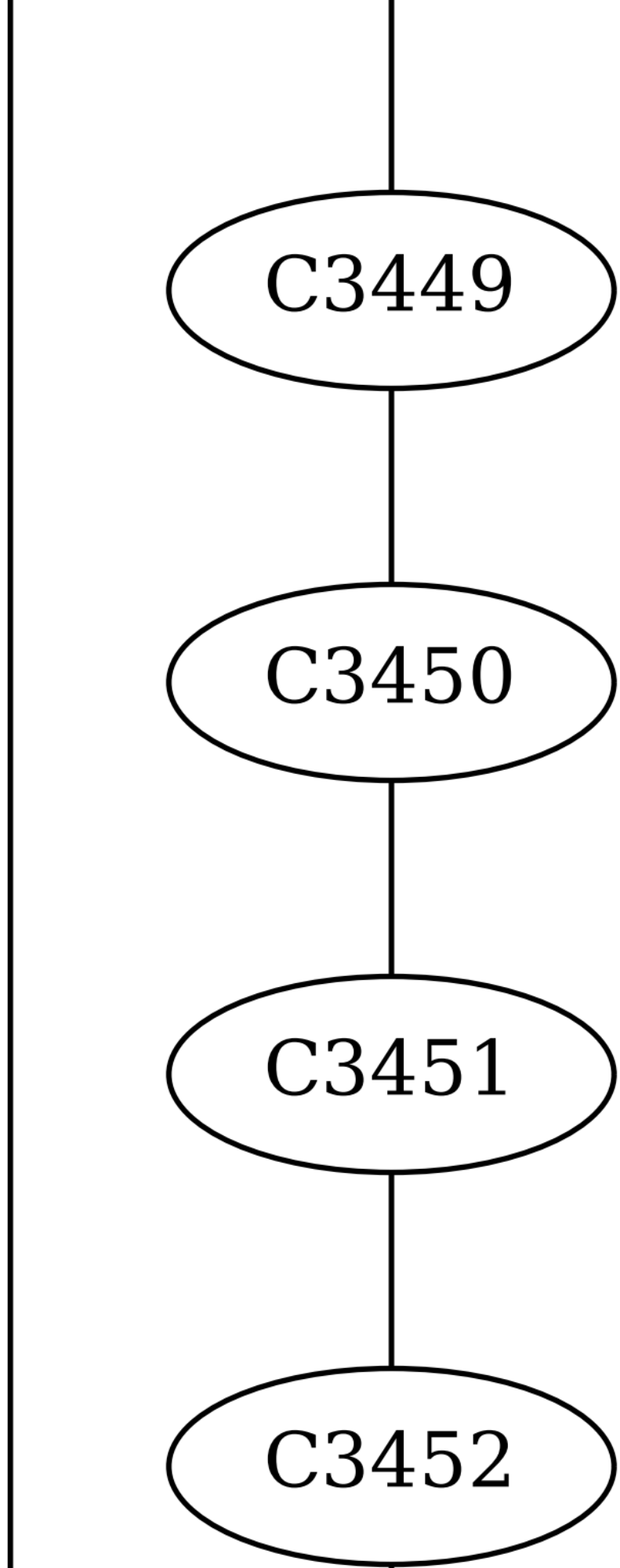
C3449
C3450
C3451
C3452

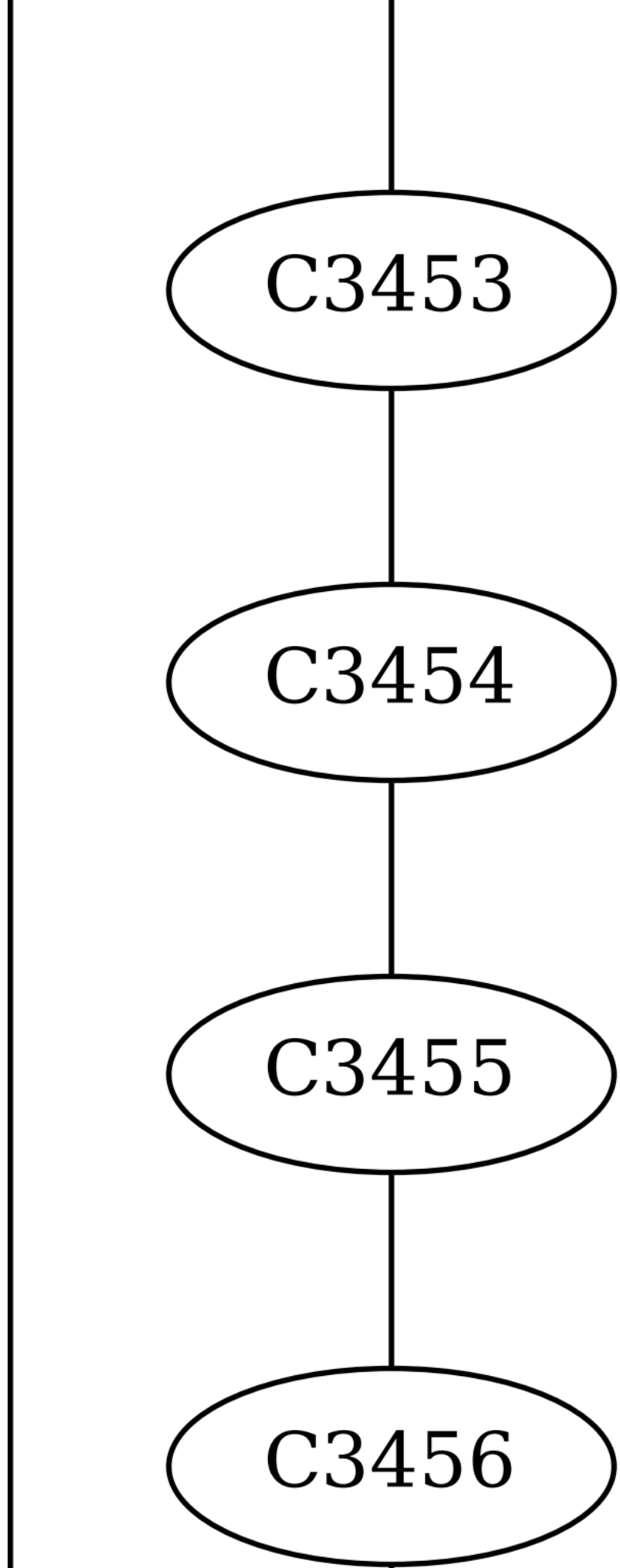
C3453
C3454
C3455
C3456

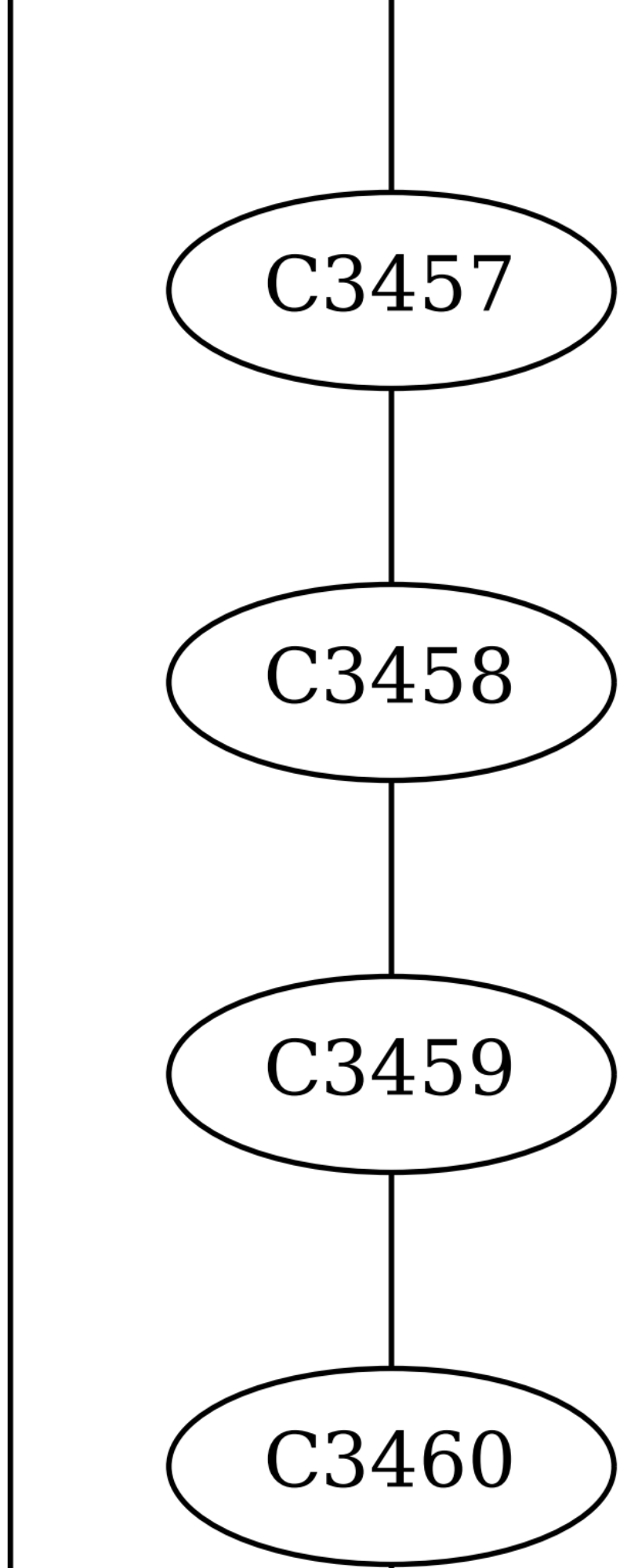
C3457
C3458
C3459
C3460

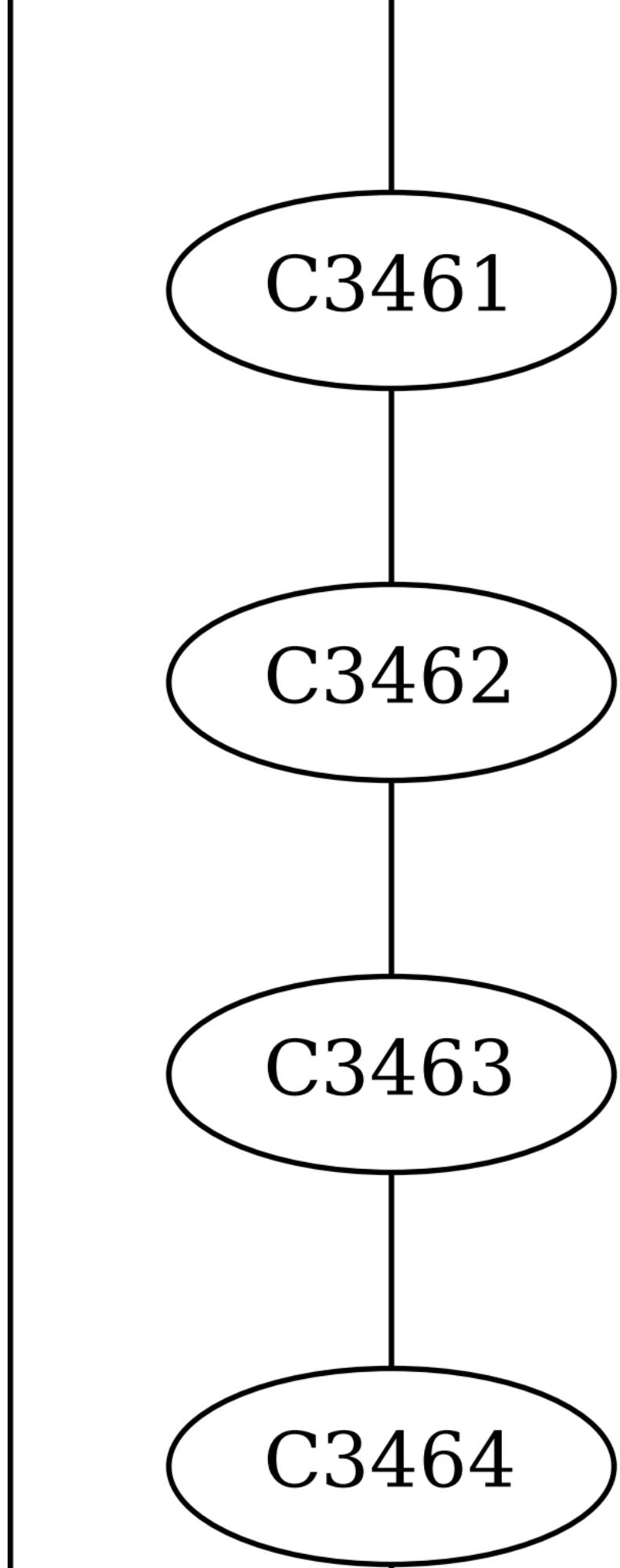
C3461
C3462
C3463
C3464

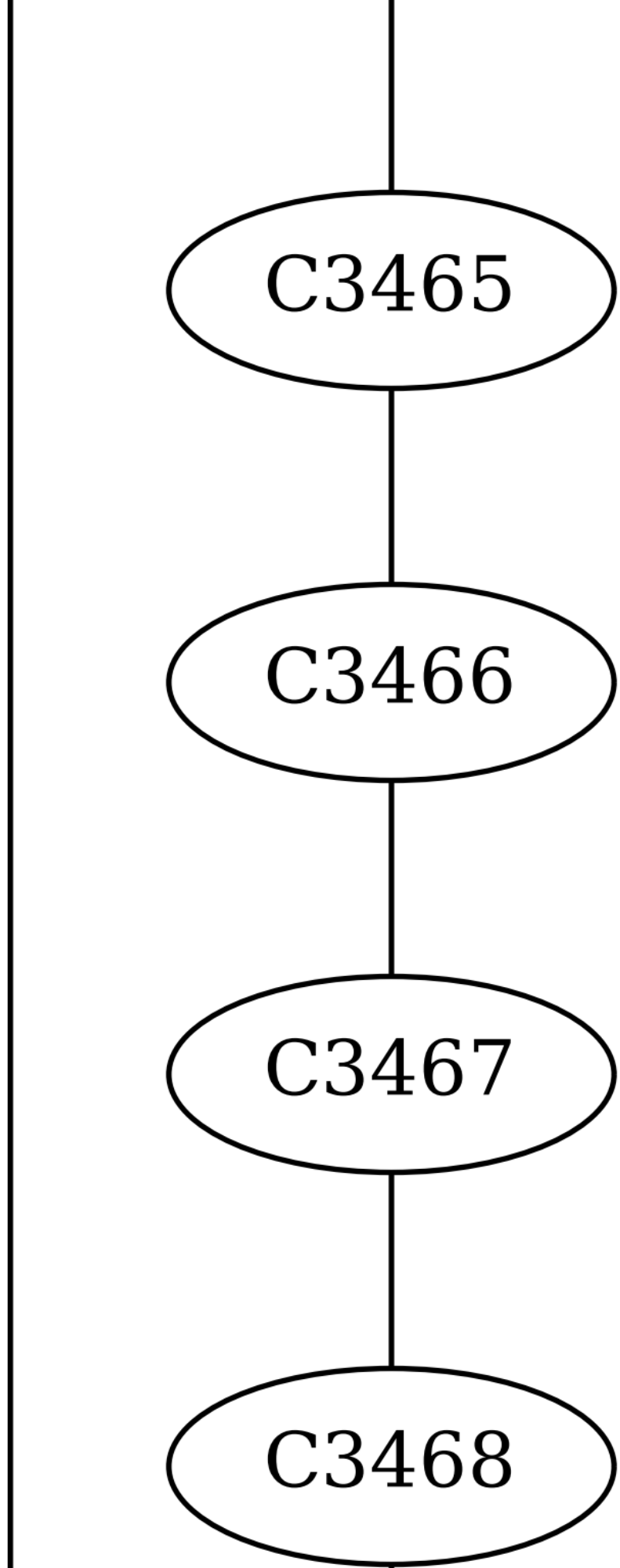
C3465
C3466
C3467
C3468

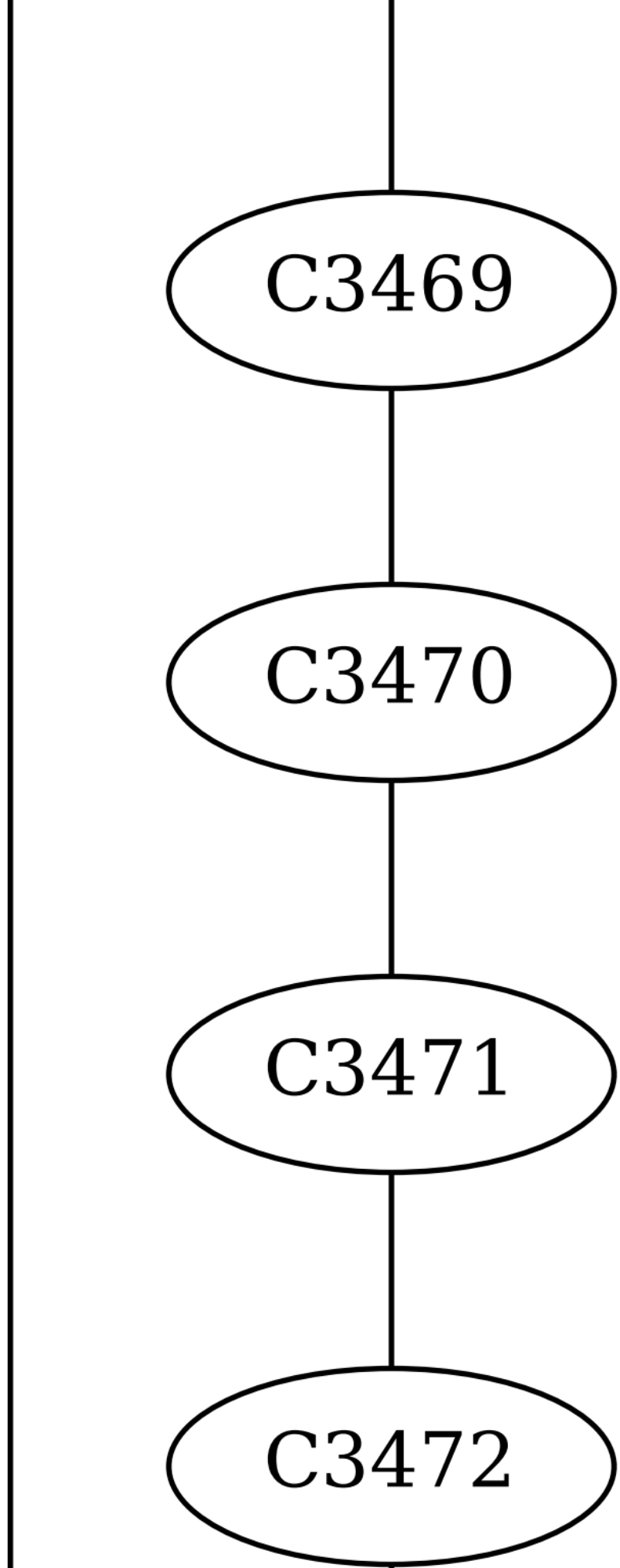
C3469
C3470
C3471
C3472

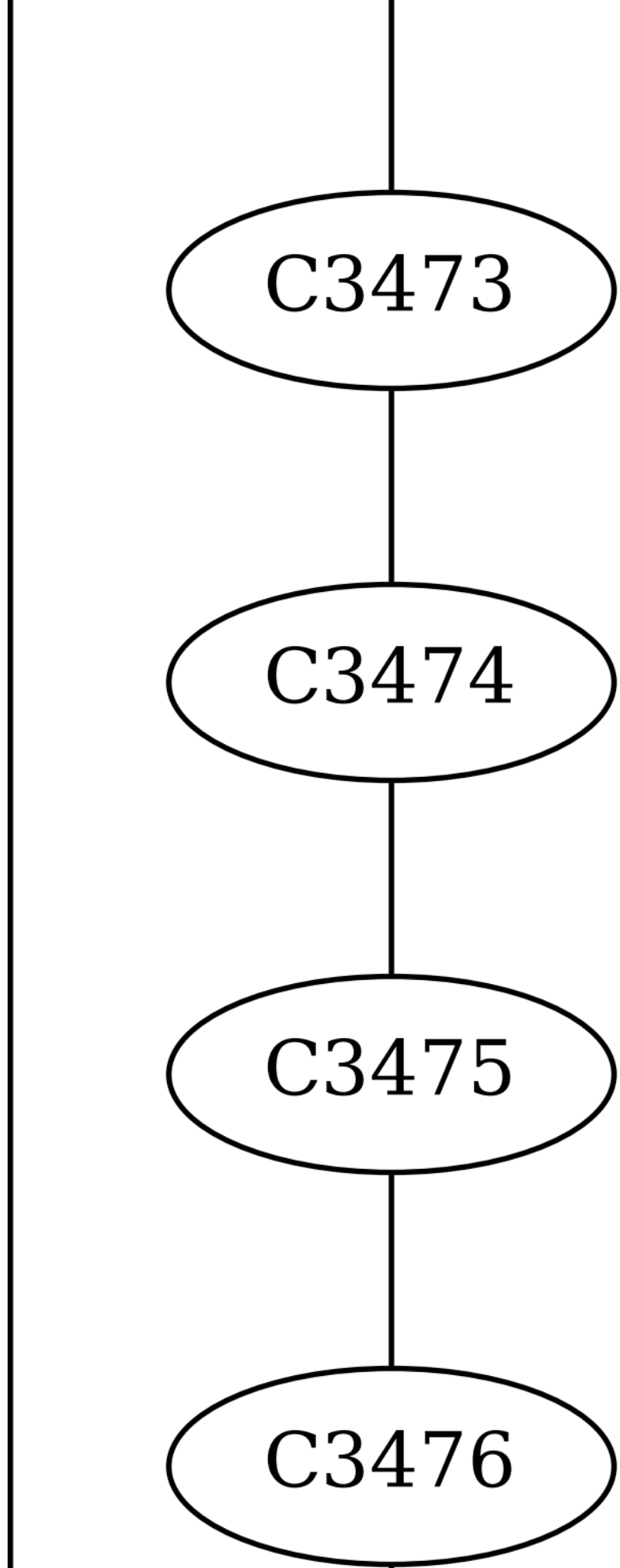
C3473
C3474
C3475
C3476

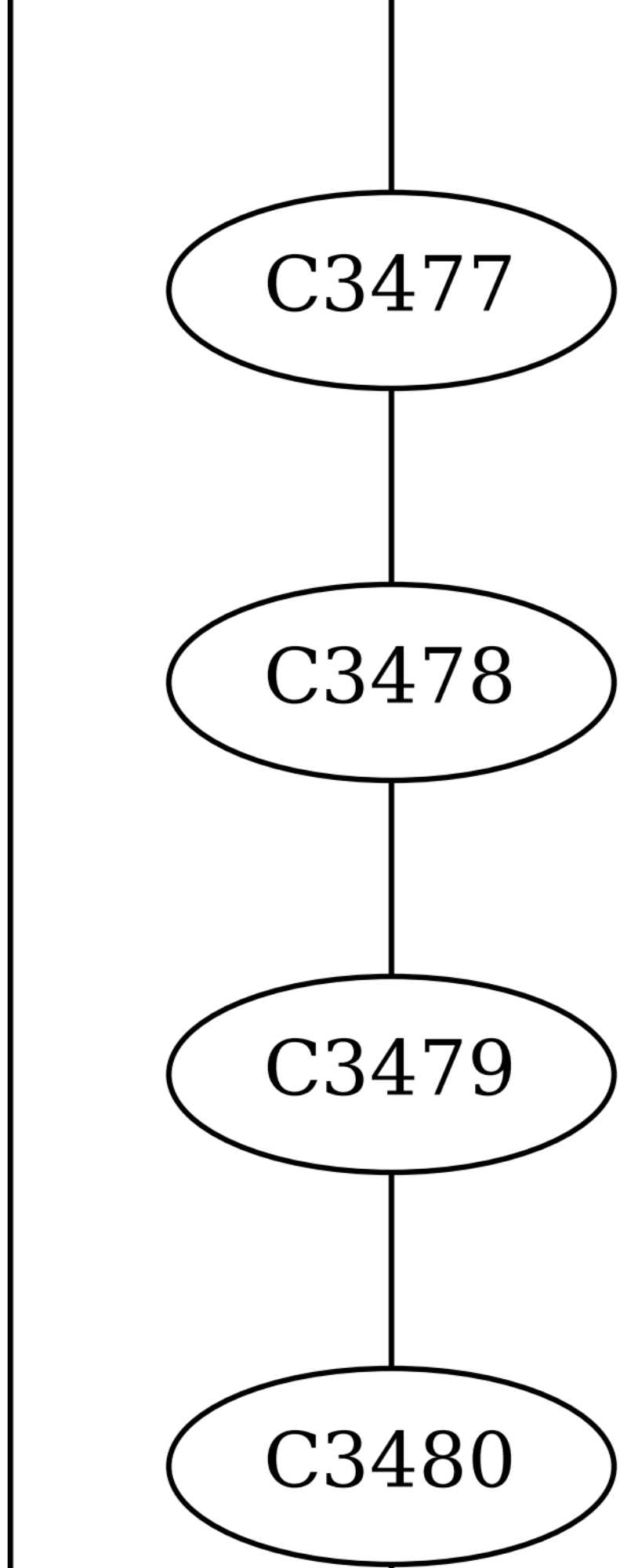
C3477
C3478
C3479
C3480

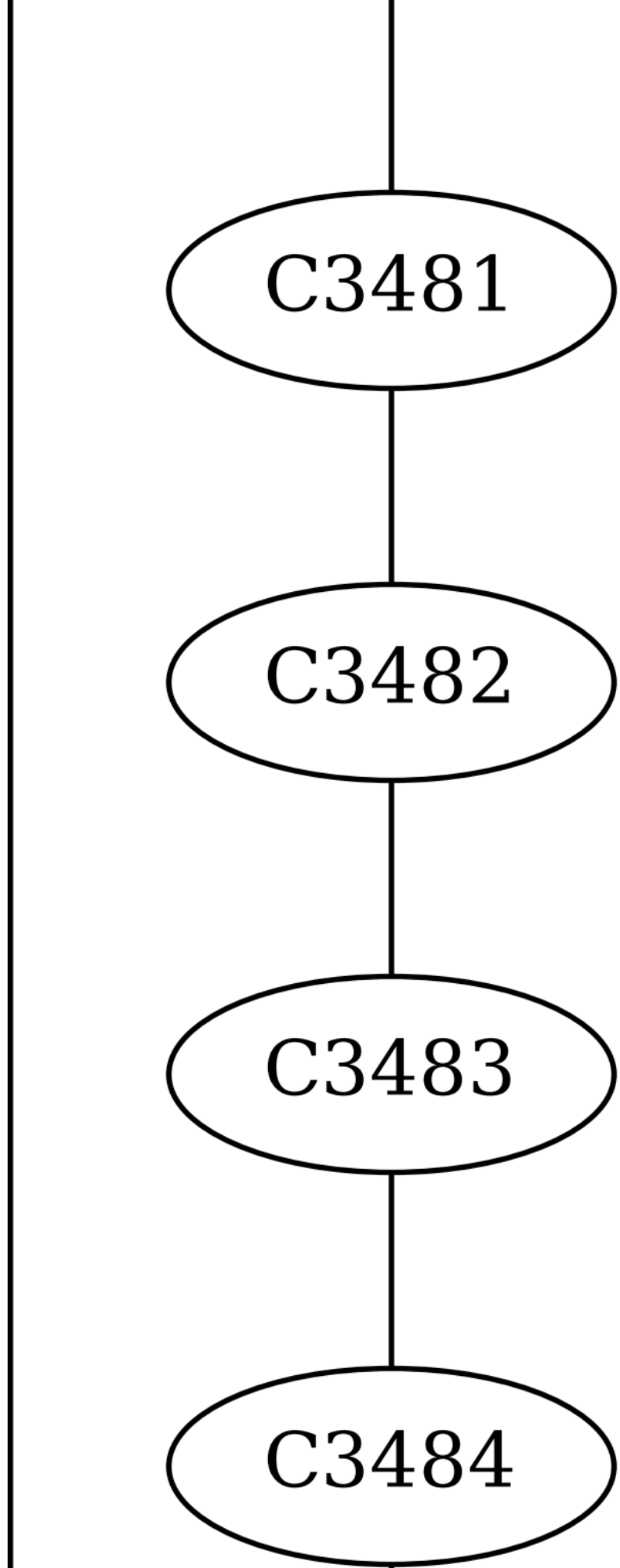
C3481
C3482
C3483
C3484

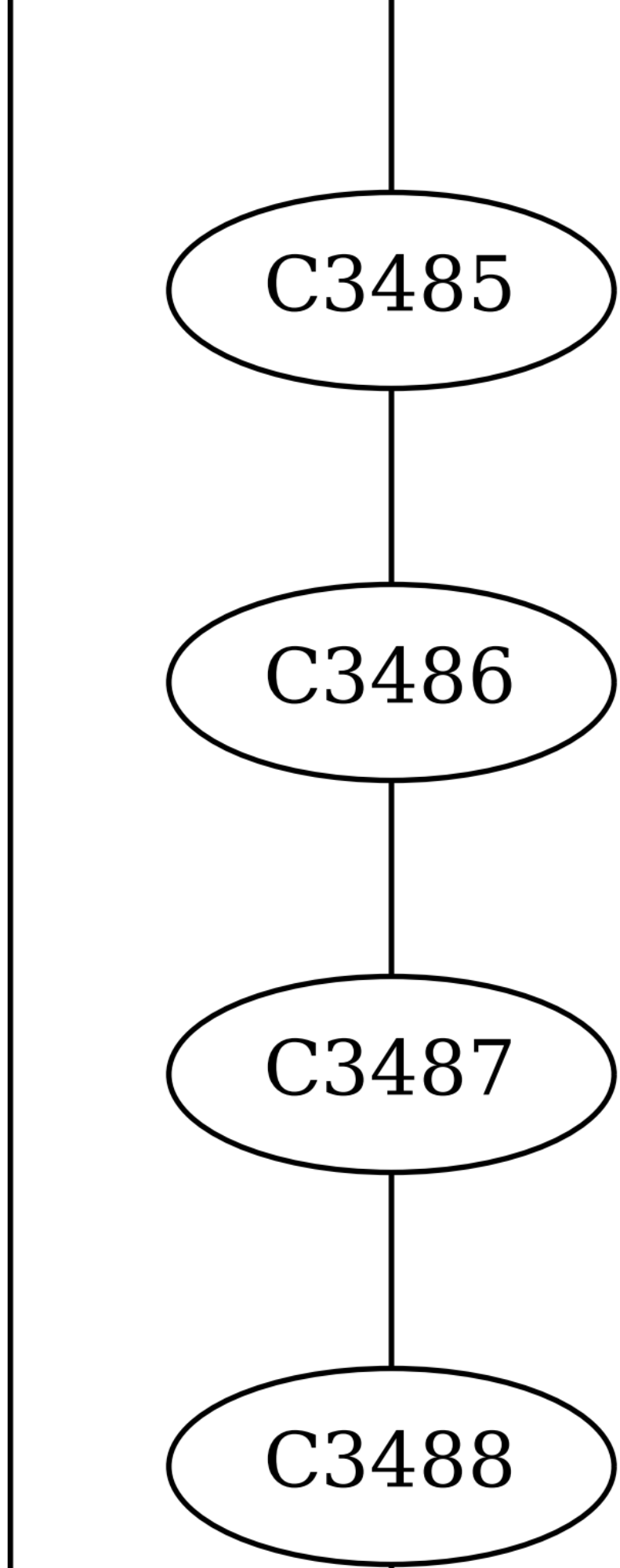
C3485
C3486
C3487
C3488

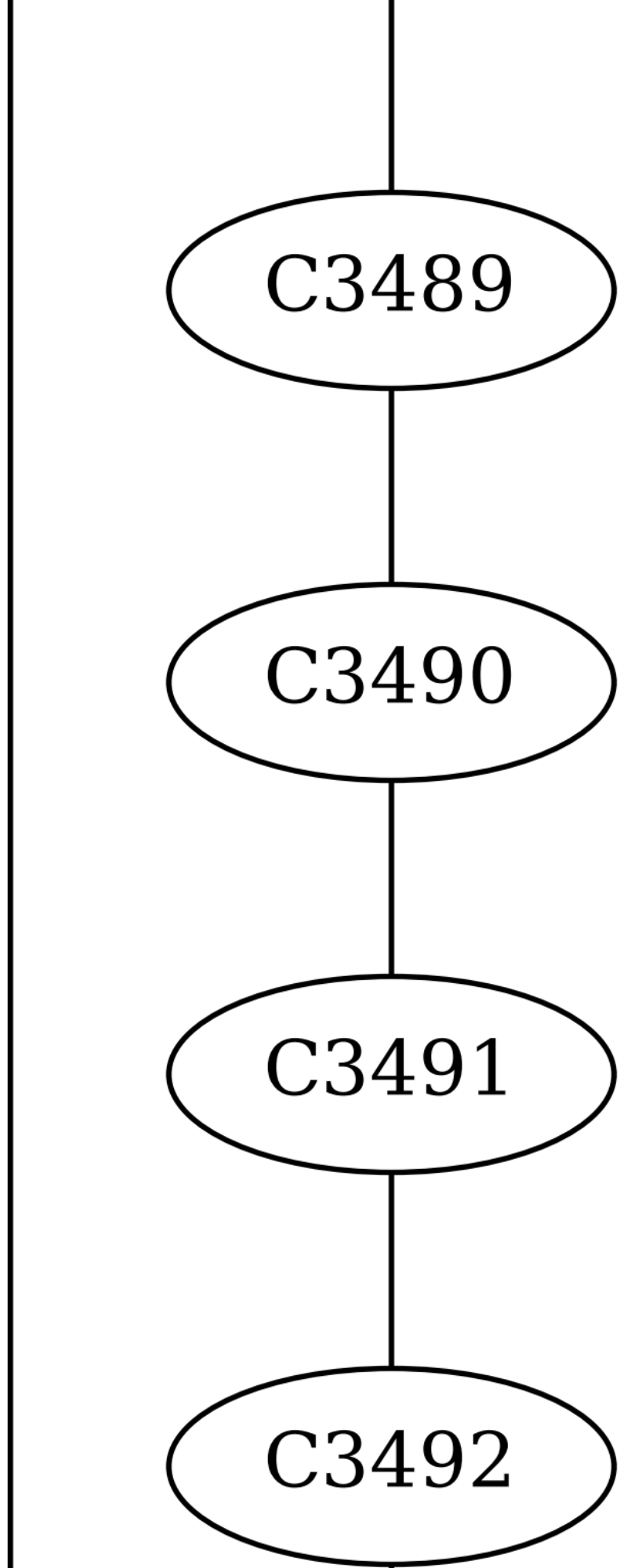
C3489
C3490
C3491
C3492

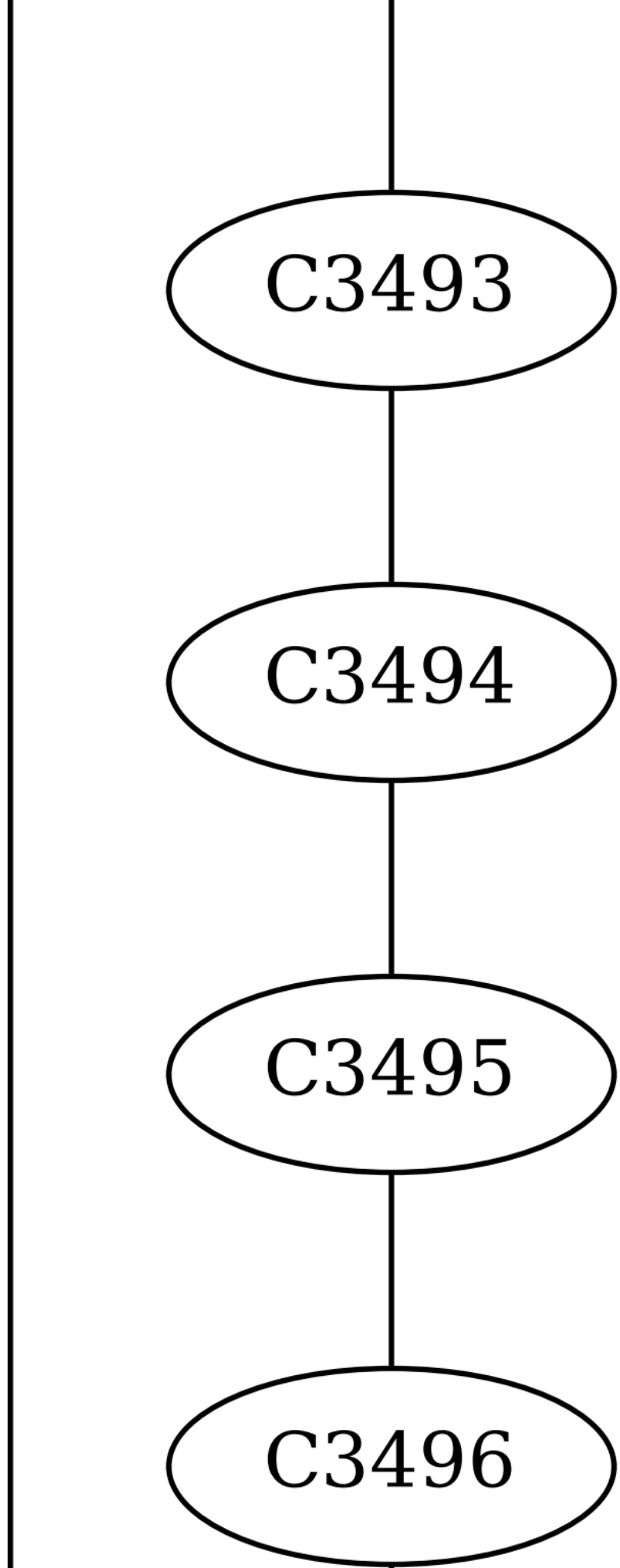
C3493
C3494
C3495
C3496

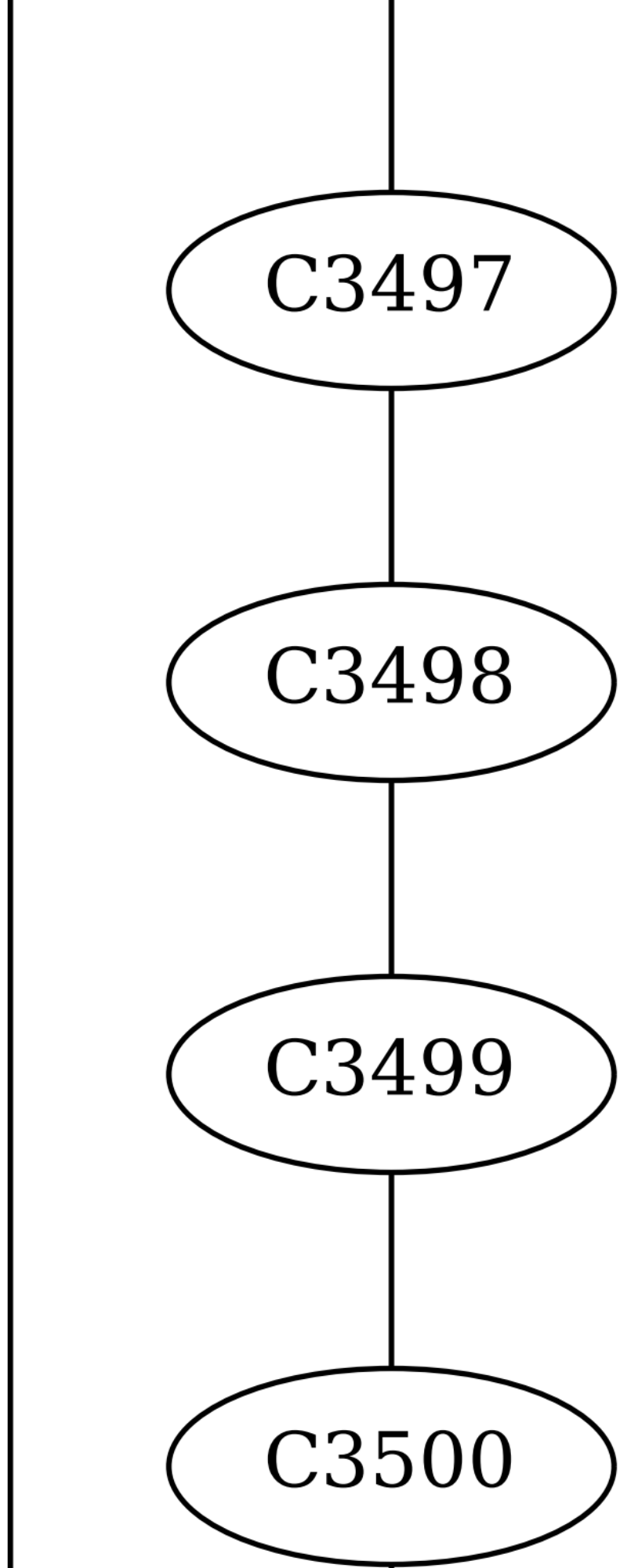
C3497
C3498
C3499
C3500

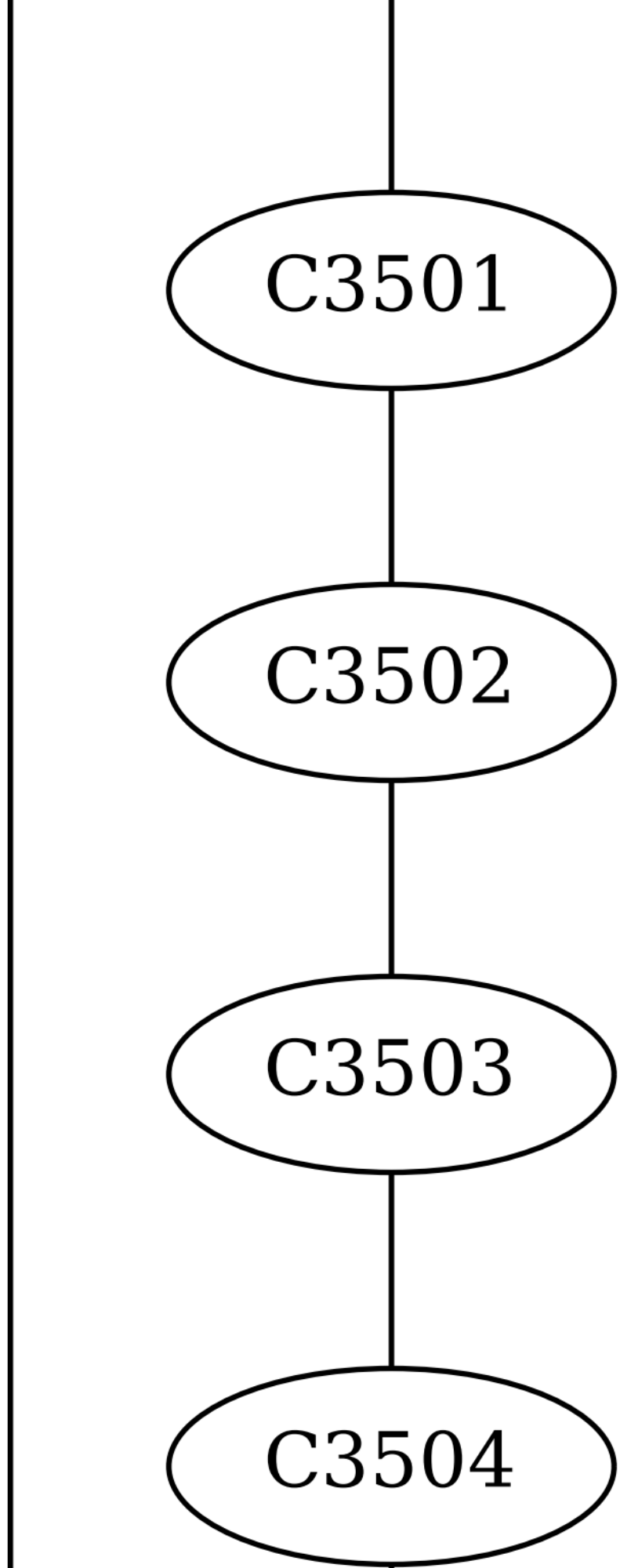
C3501
C3502
C3503
C3504

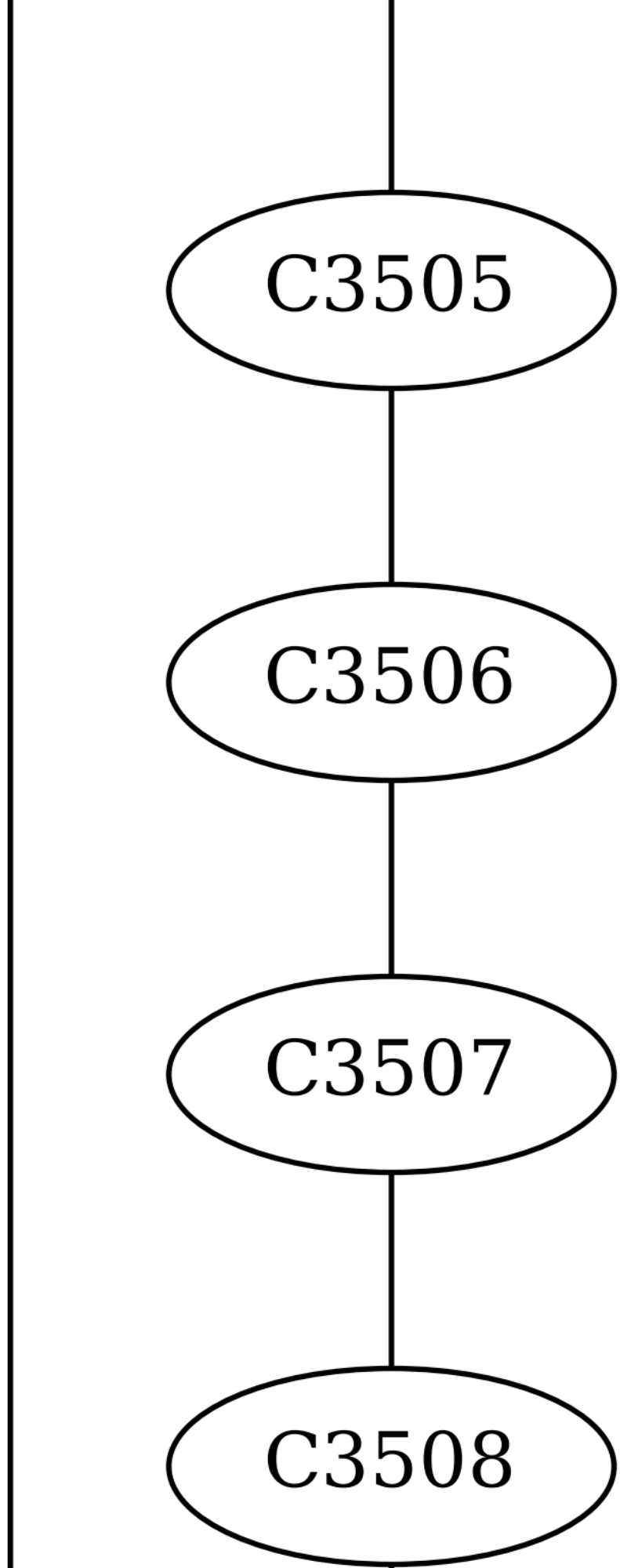
C3505
C3506
C3507
C3508

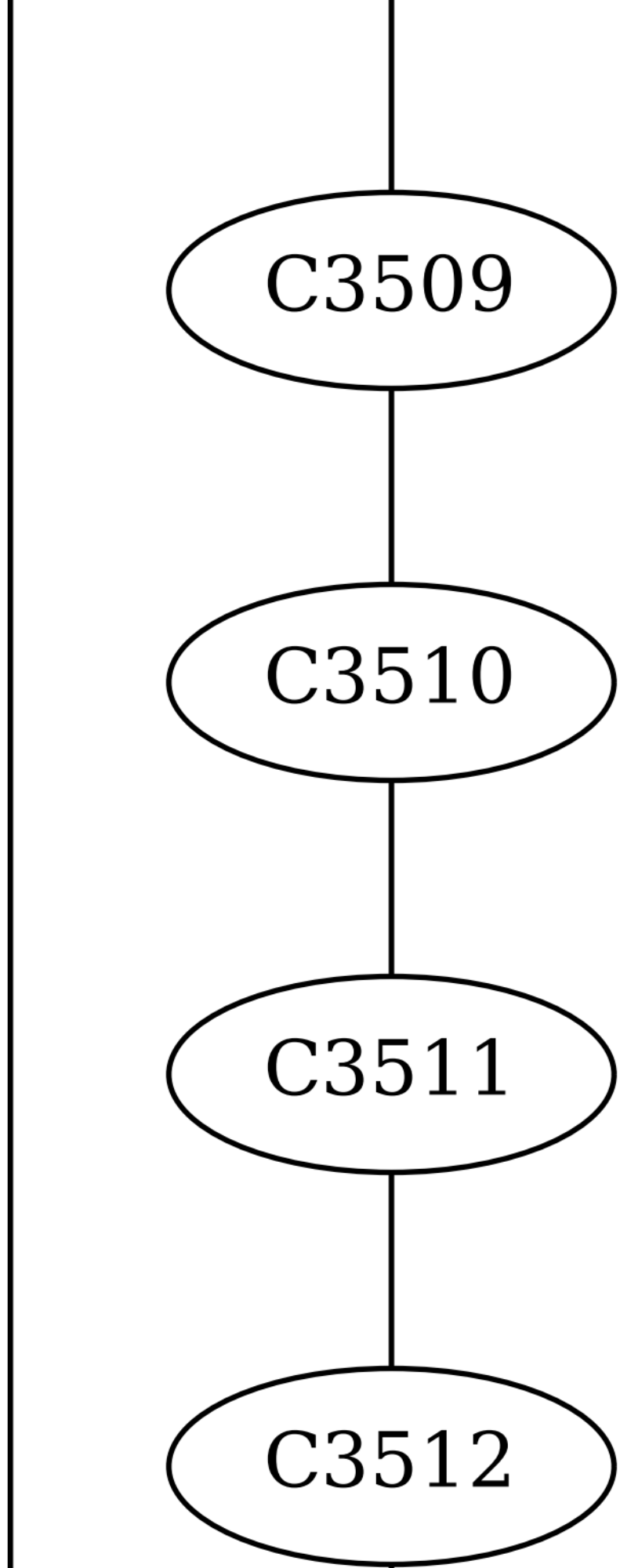
C3509
C3510
C3511
C3512

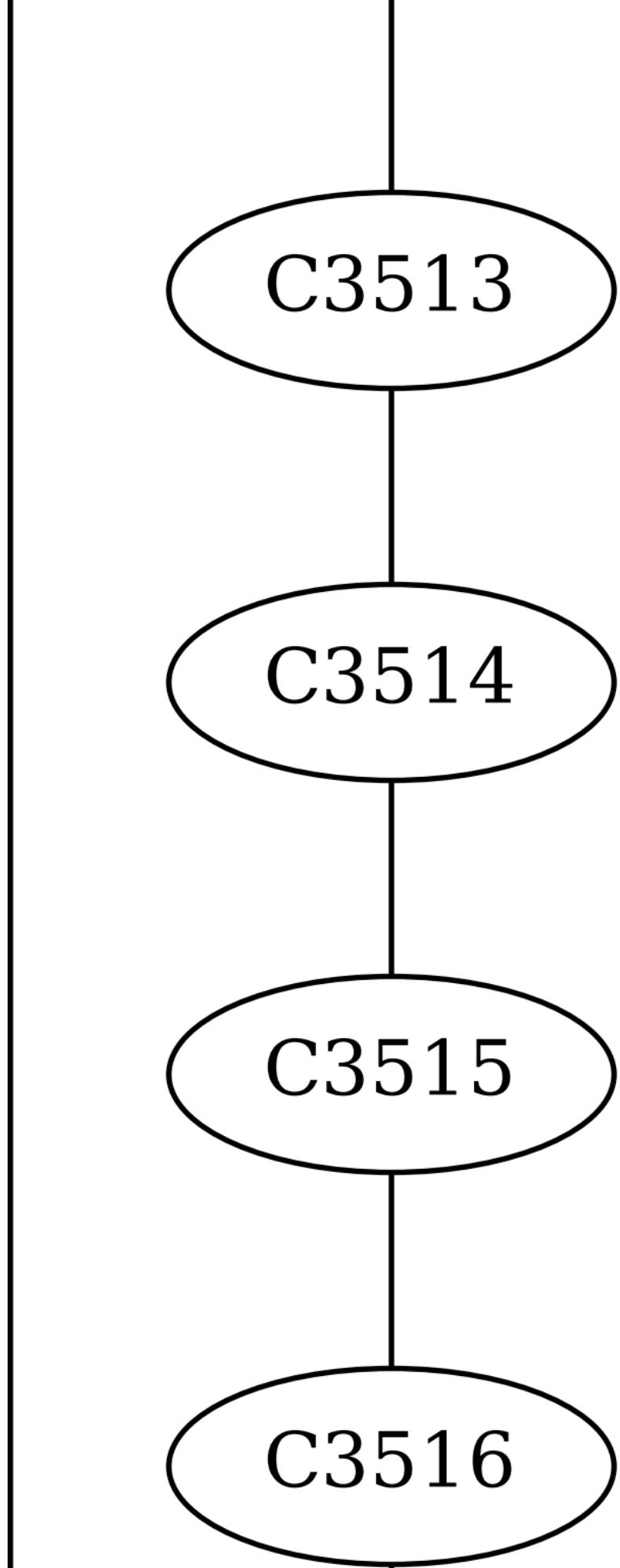
C3513
C3514
C3515
C3516

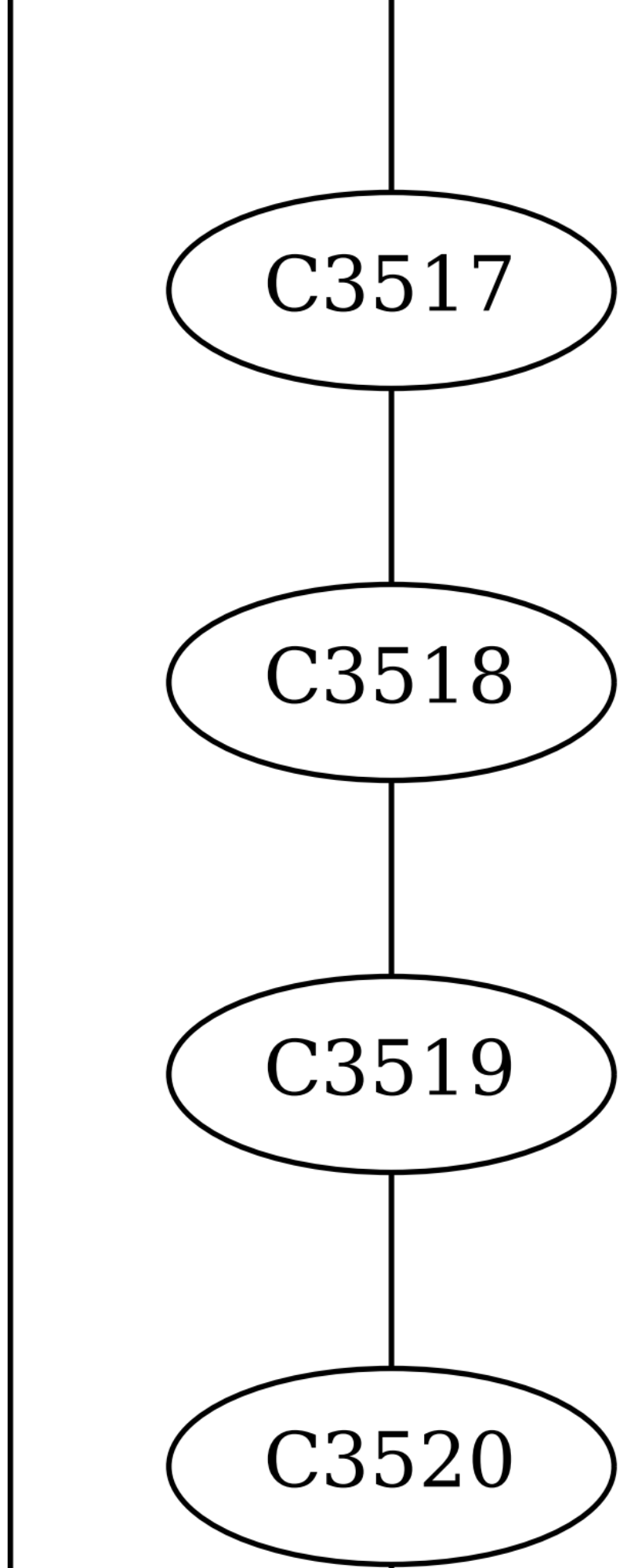
C3517
C3518
C3519
C3520

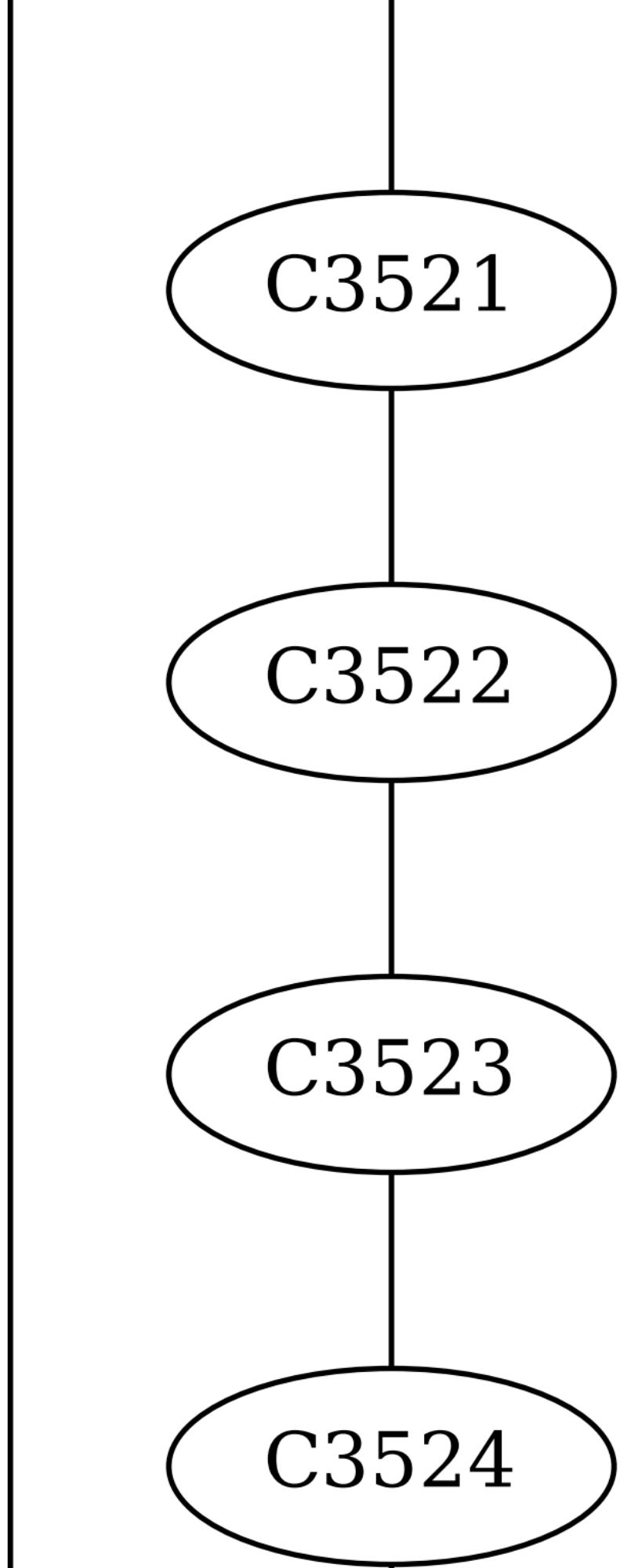
C3521
C3522
C3523
C3524

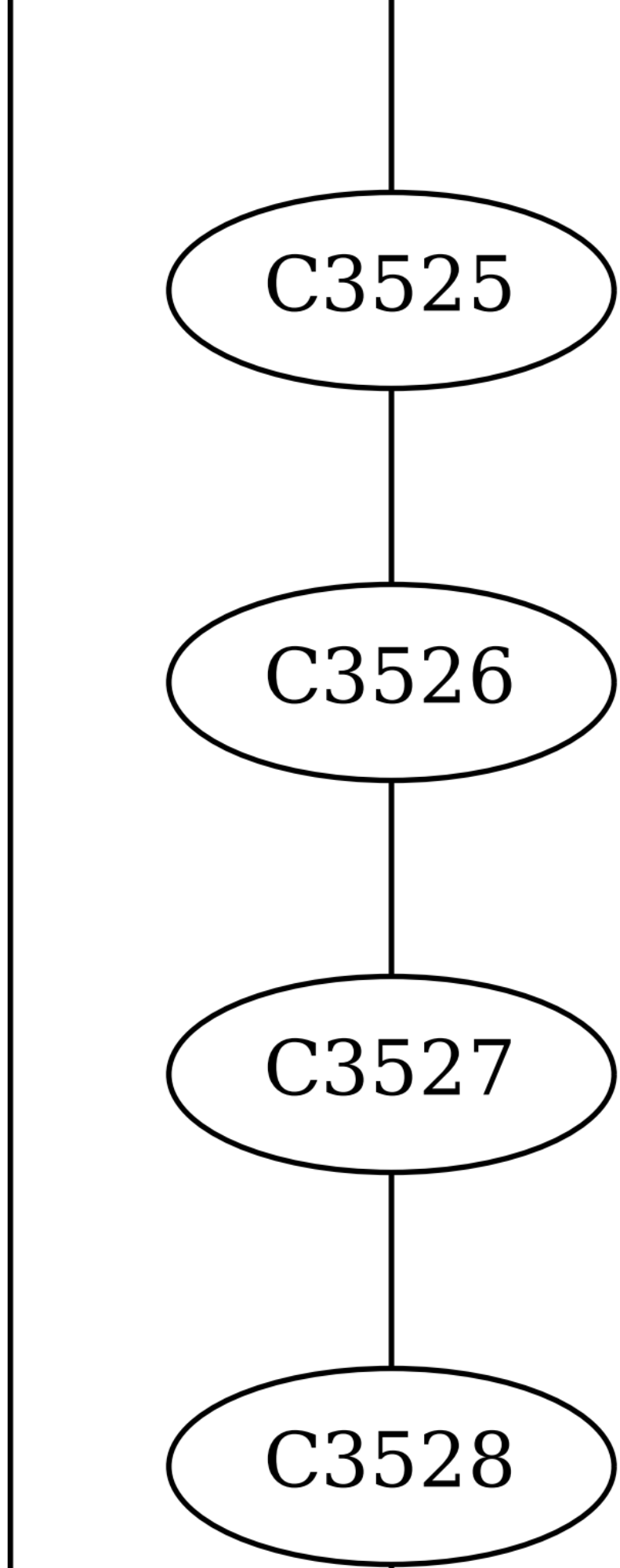
C3525
C3526
C3527
C3528

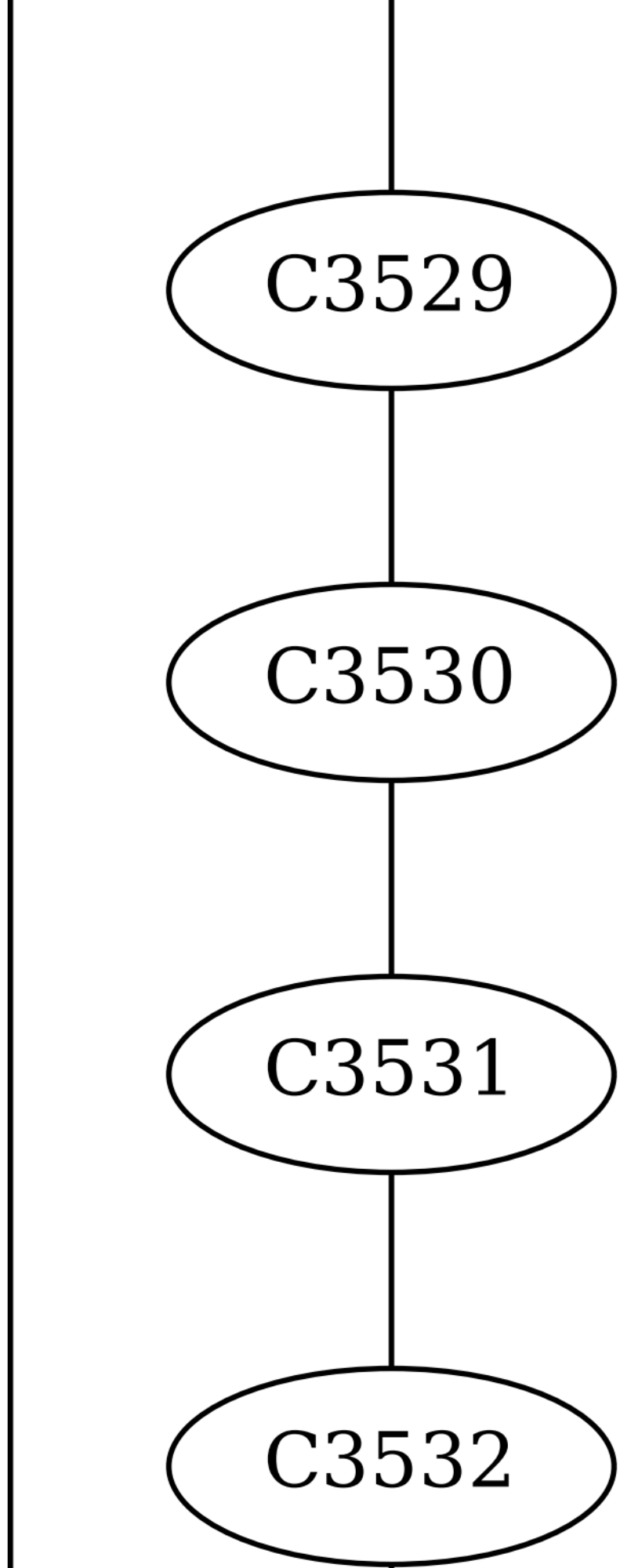
C3529
C3530
C3531
C3532

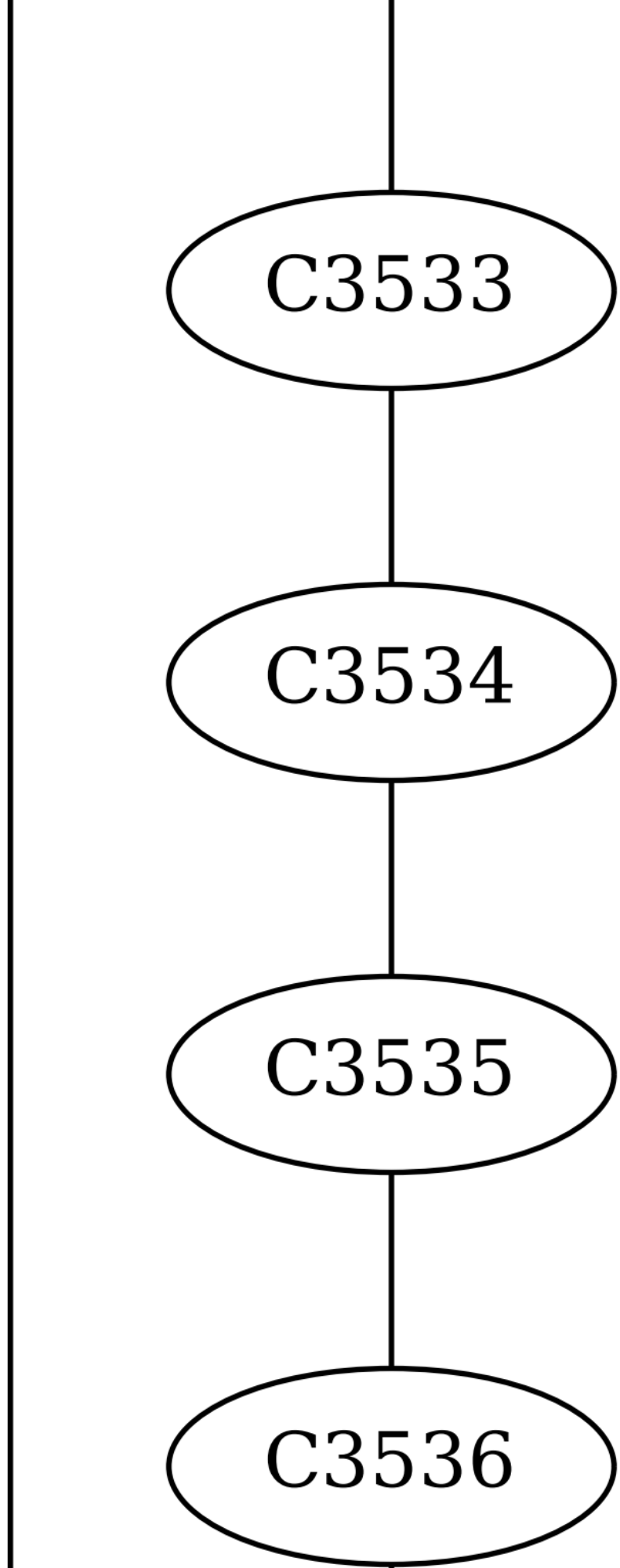
C3533
C3534
C3535
C3536

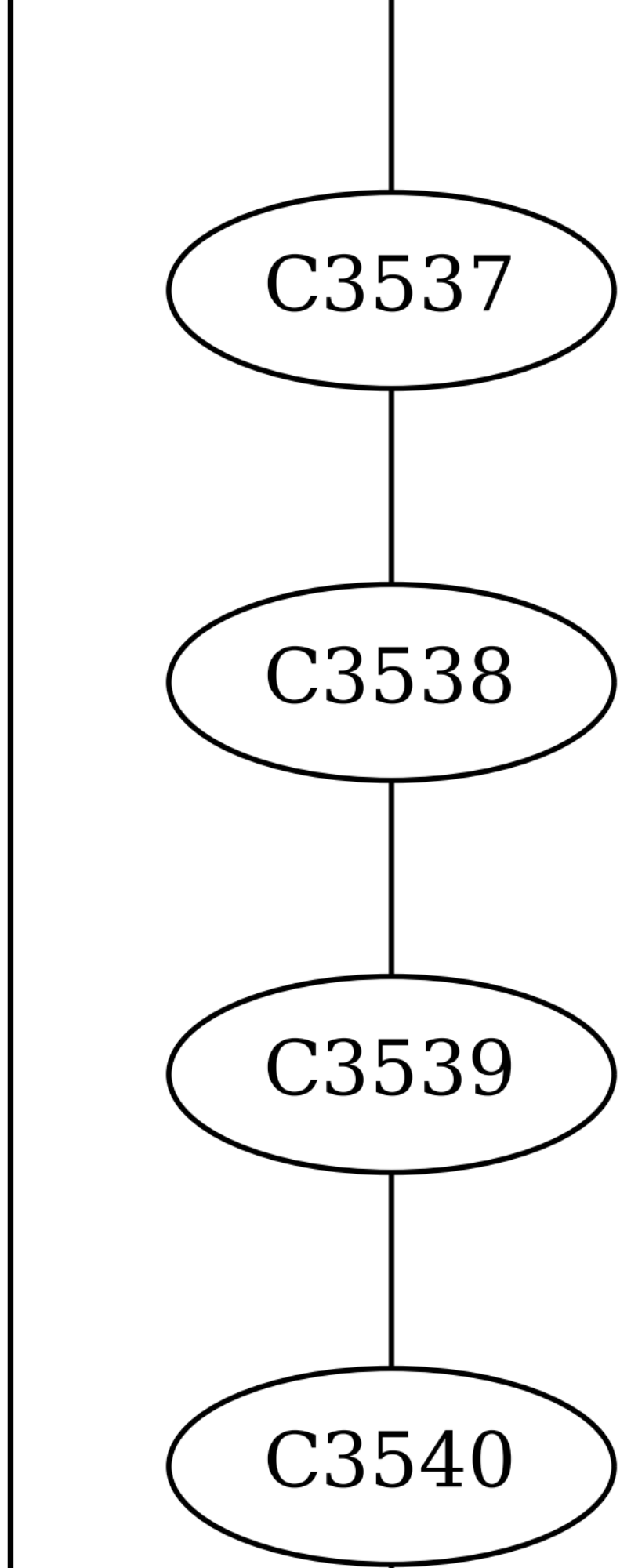
C3537
C3538
C3539
C3540

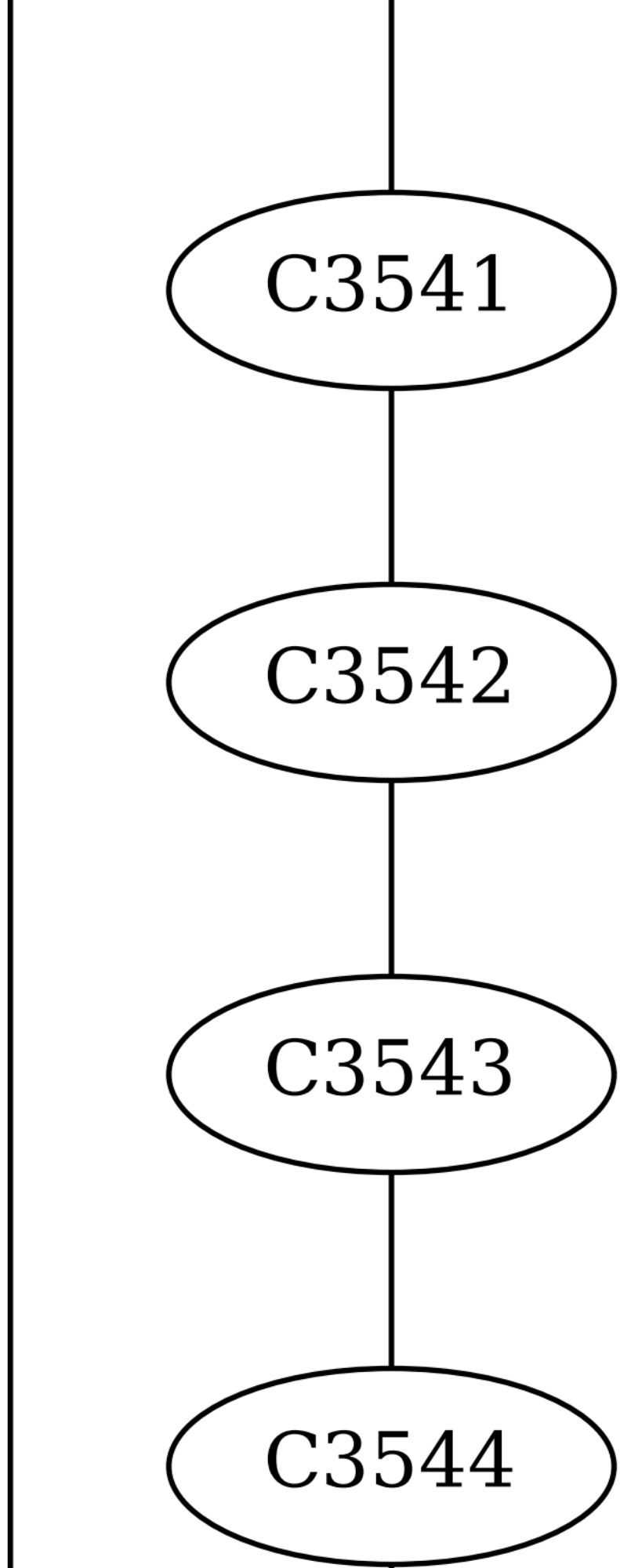
C3541
C3542
C3543
C3544

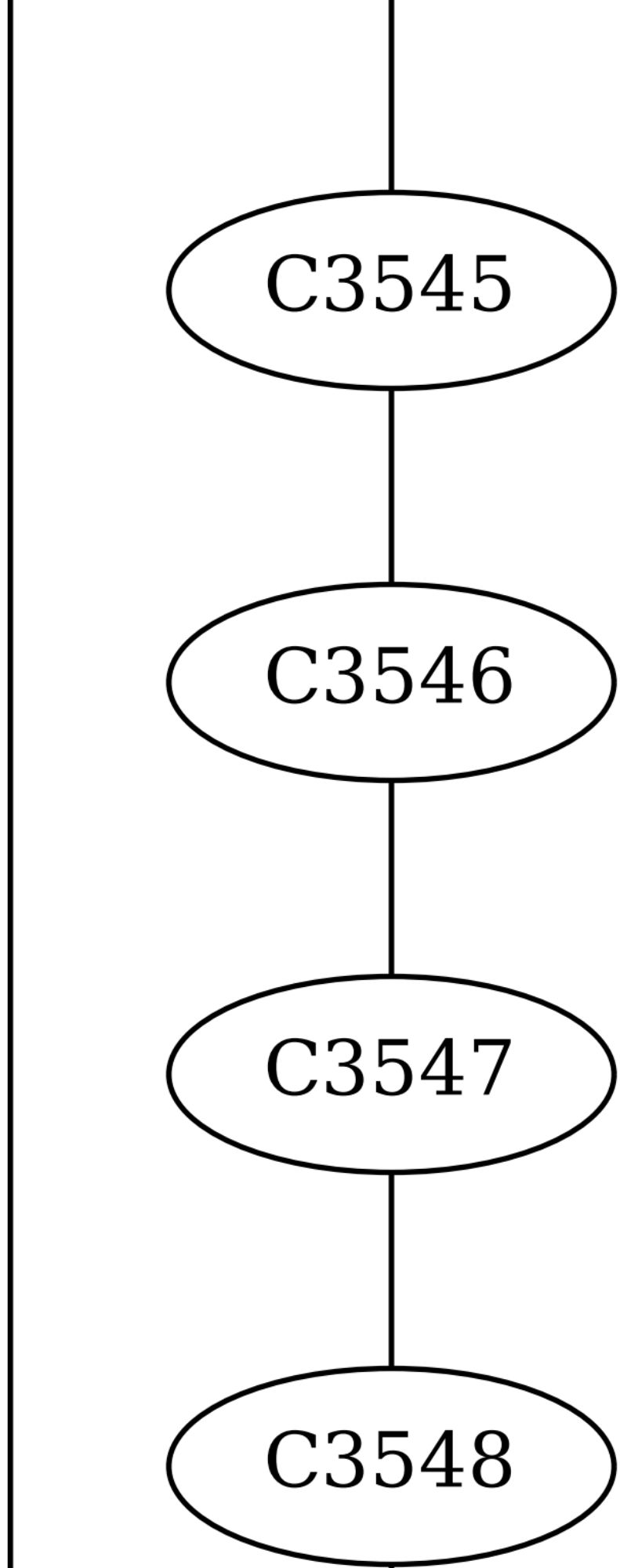
C3545
C3546
C3547
C3548

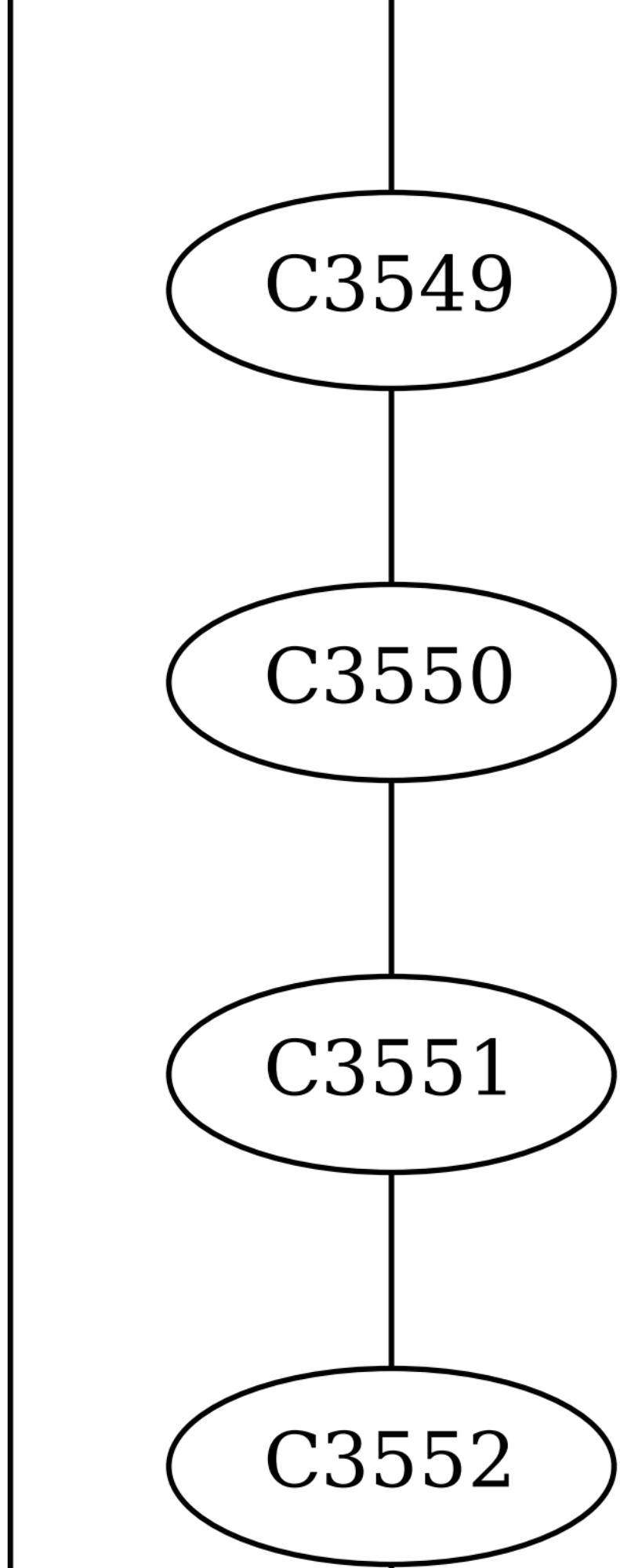
C3549
C3550
C3551
C3552

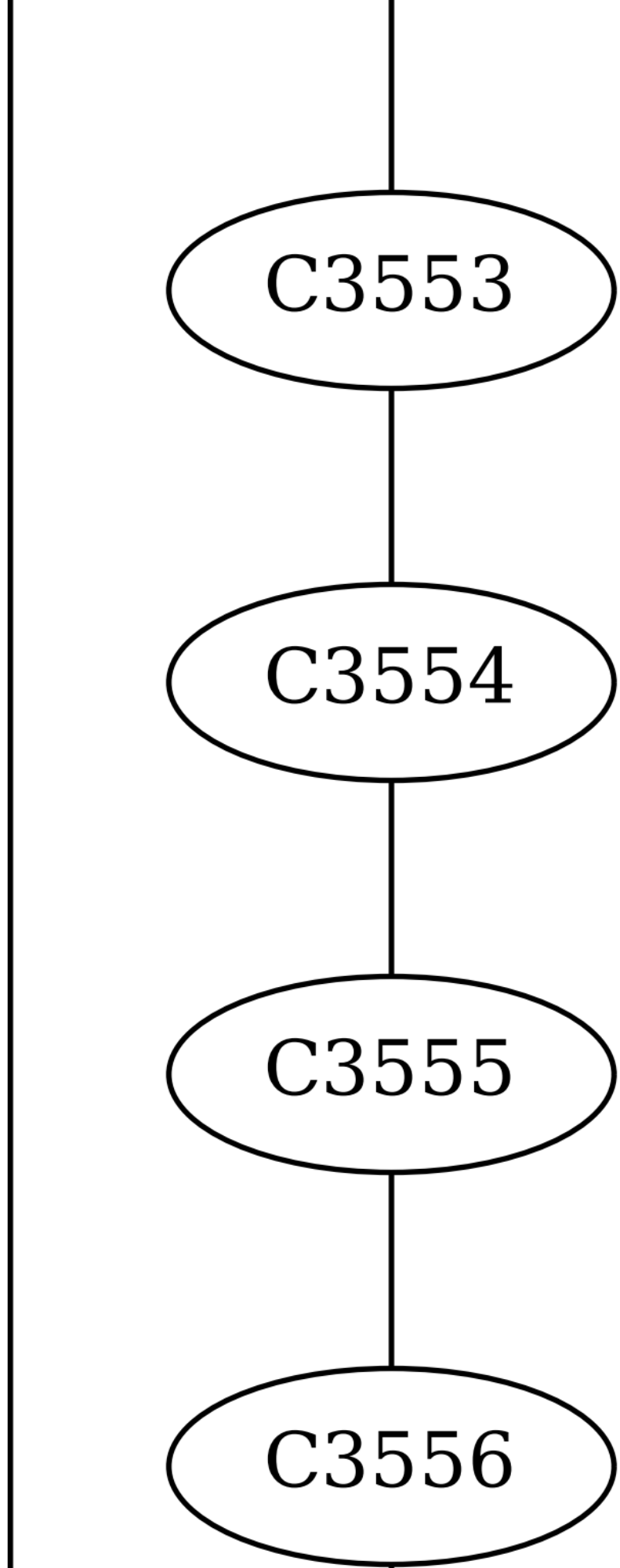
C3553
C3554
C3555
C3556

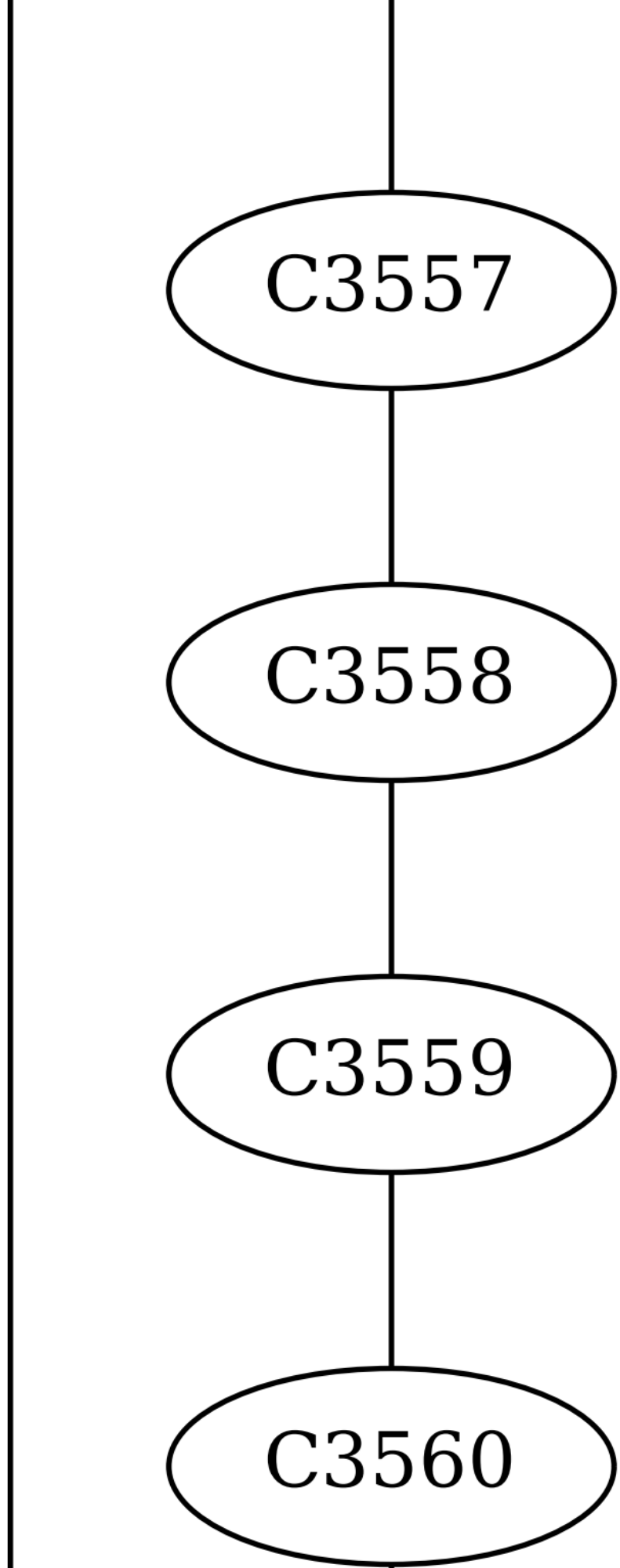
C3557
C3558
C3559
C3560

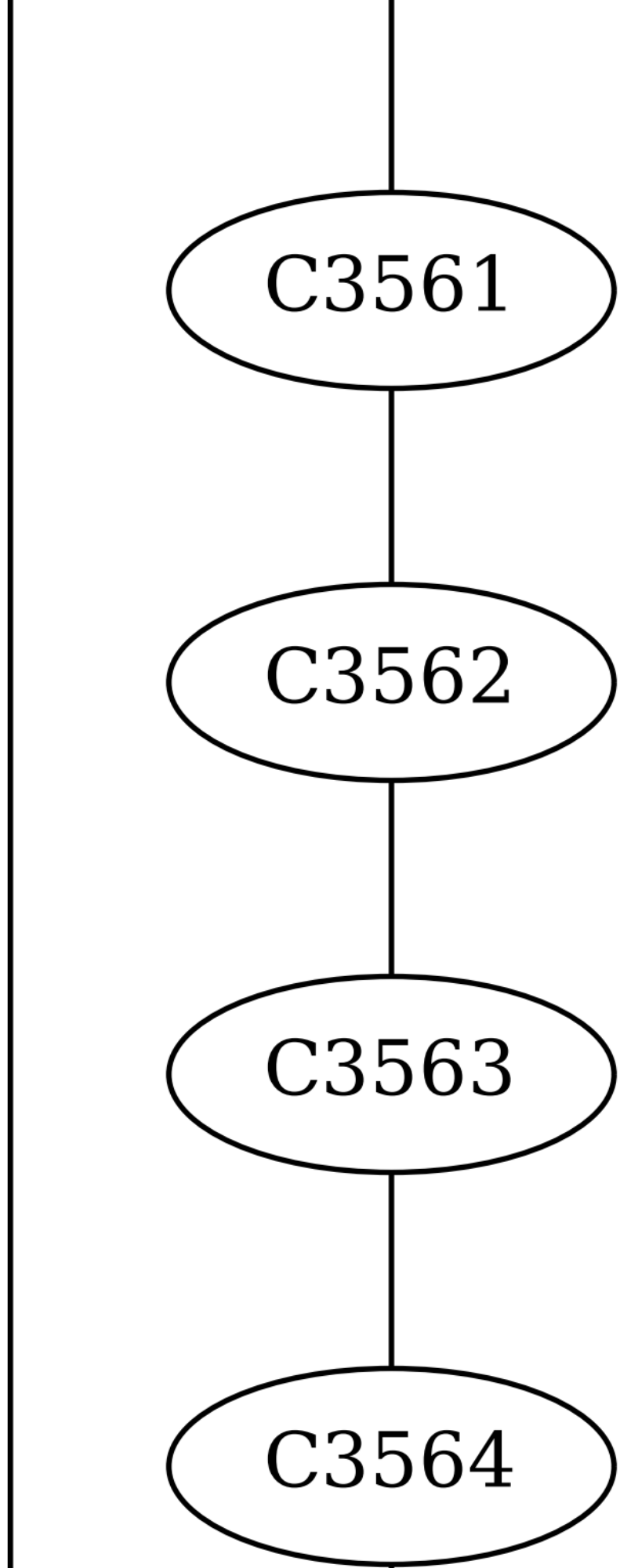
C3561
C3562
C3563
C3564

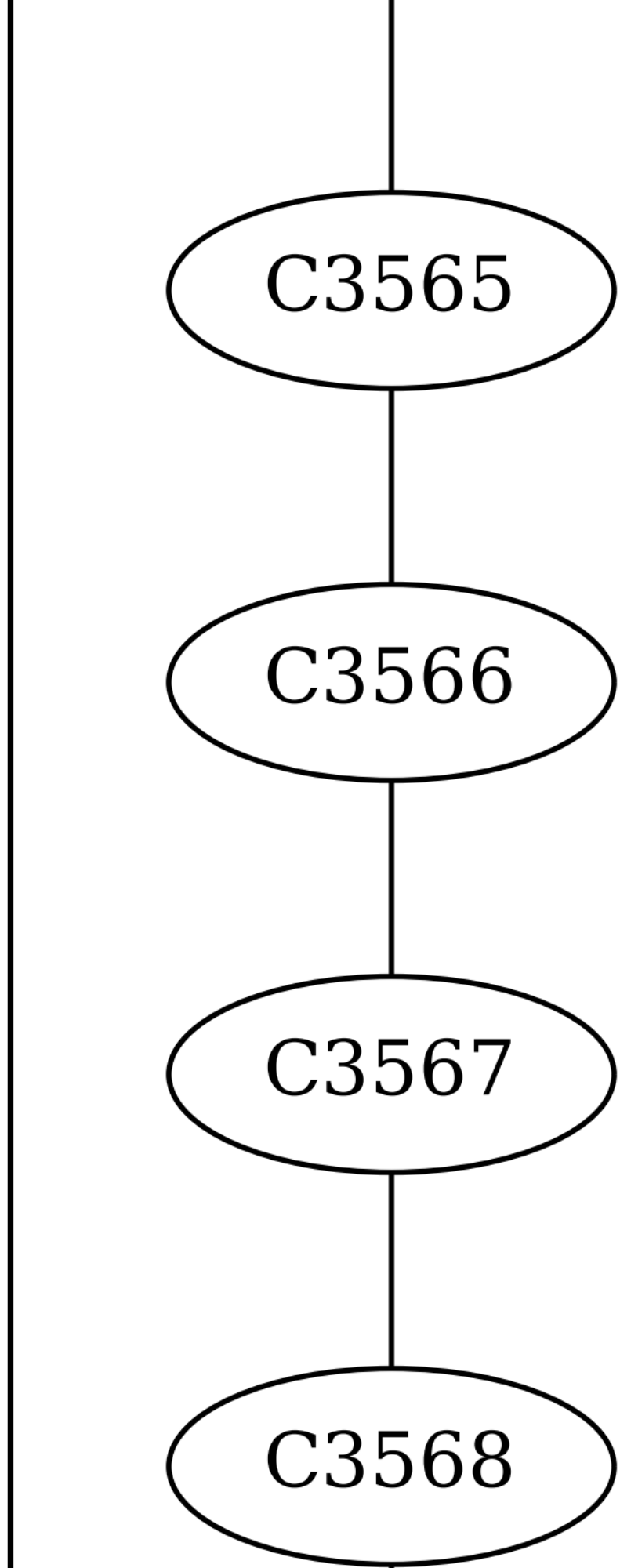
C3565
C3566
C3567
C3568

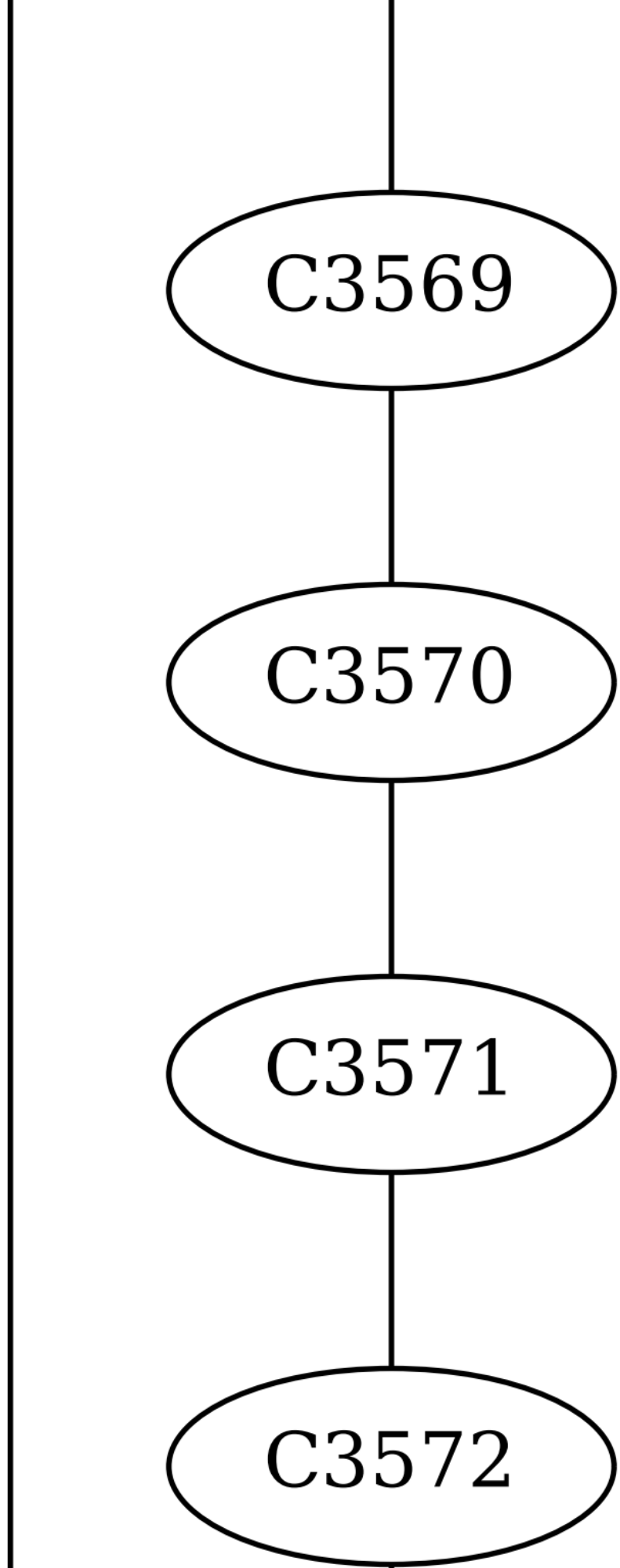
C3569
C3570
C3571
C3572

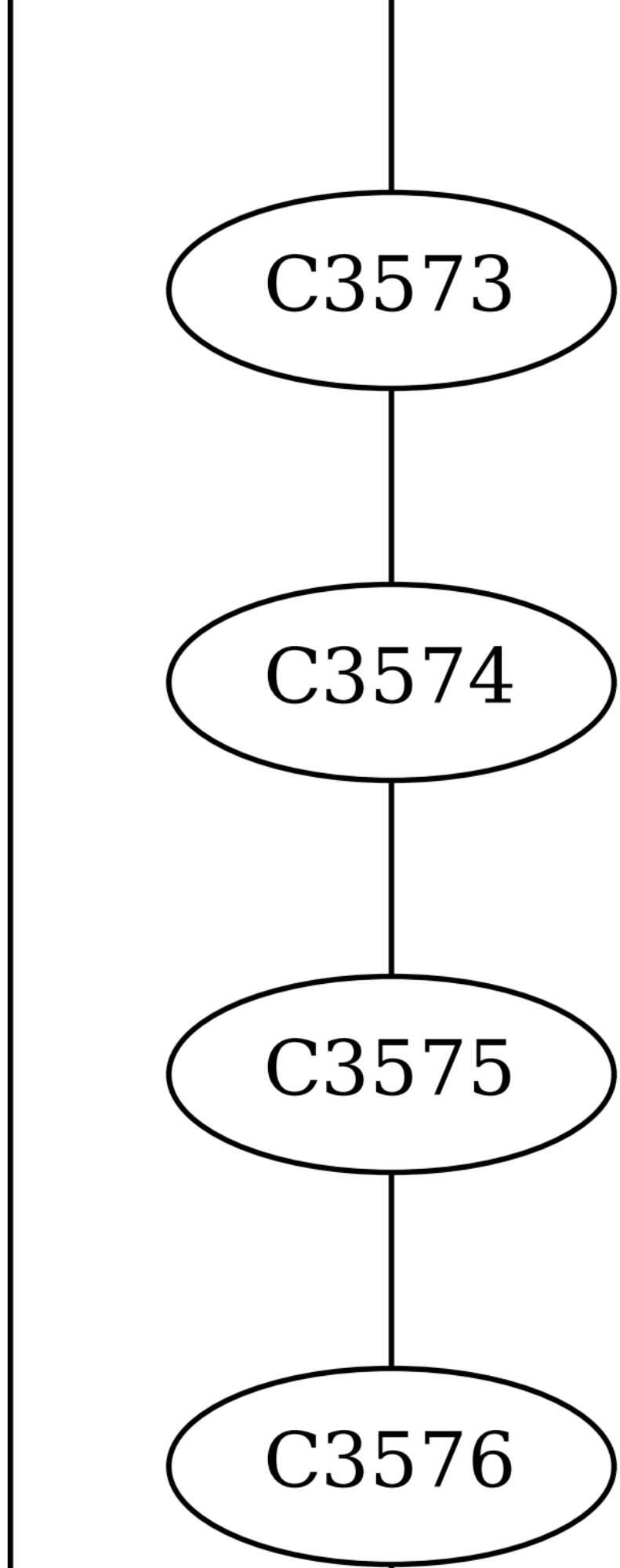
C3573
C3574
C3575
C3576

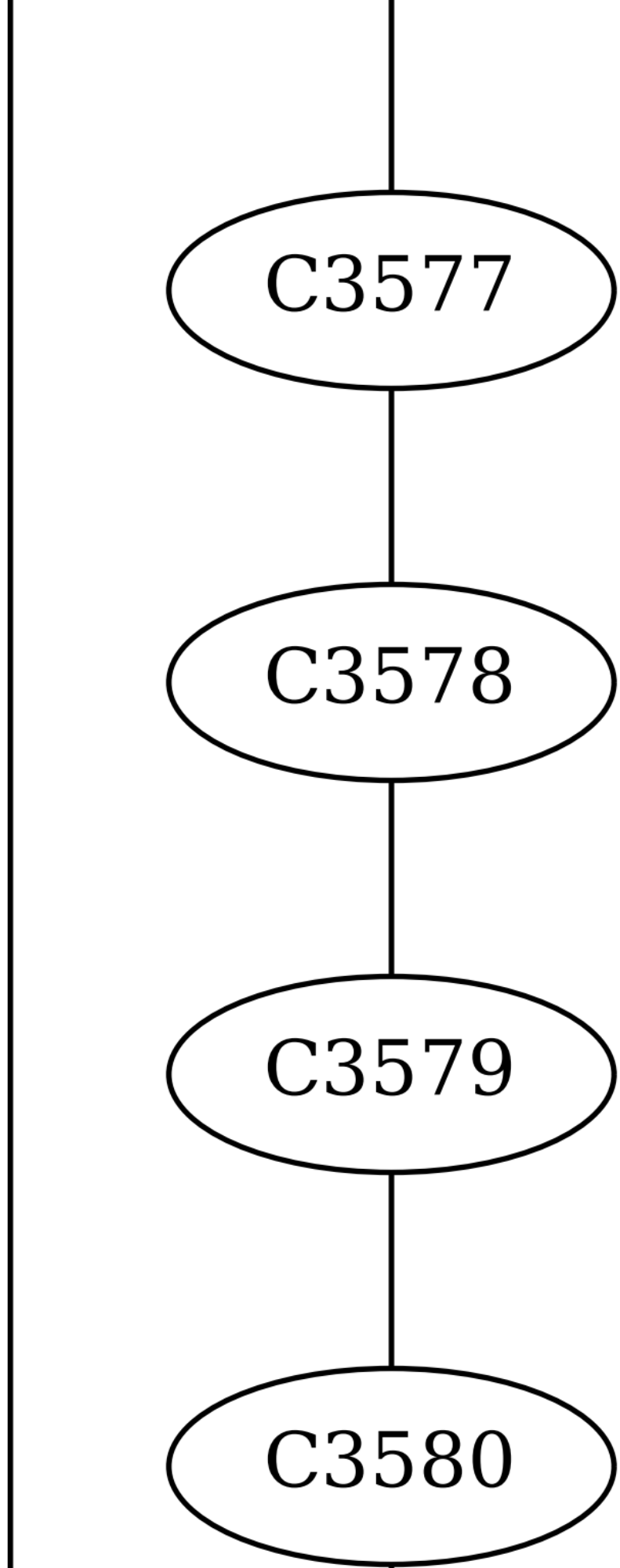
C3577
C3578
C3579
C3580

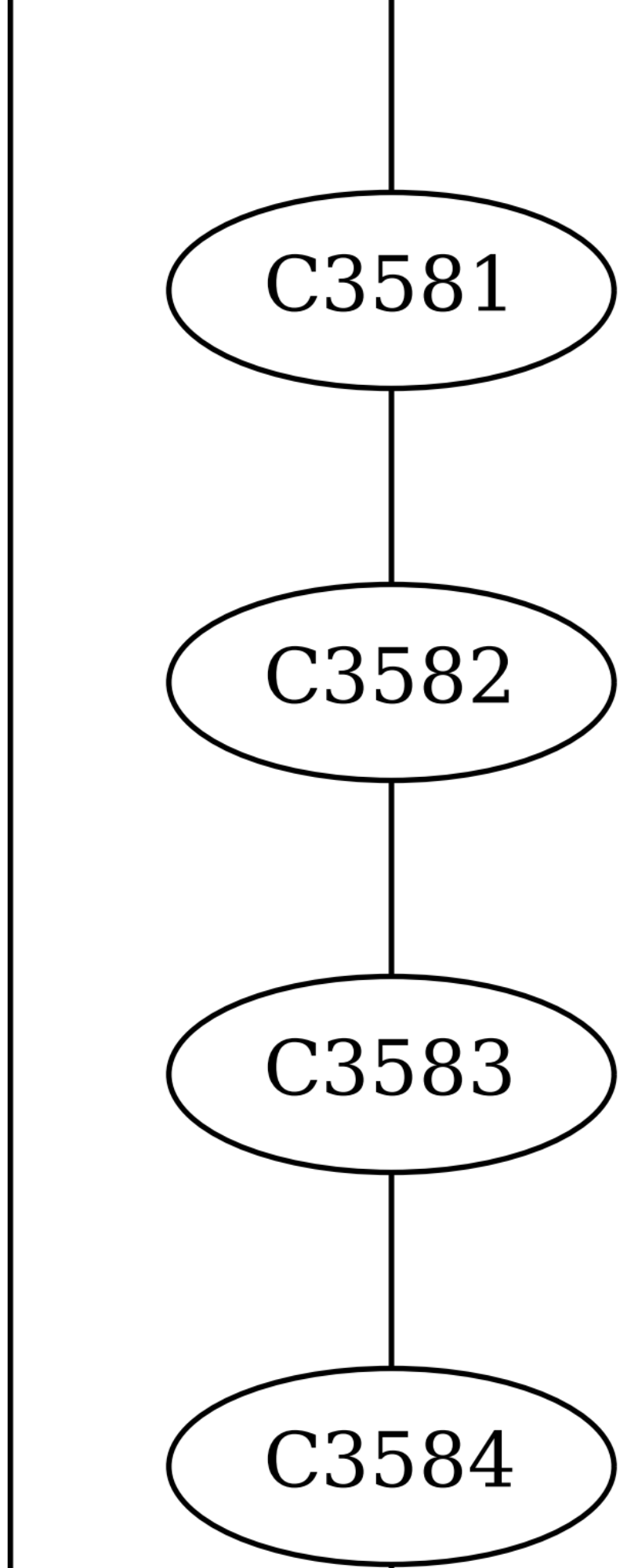
C3581
C3582
C3583
C3584

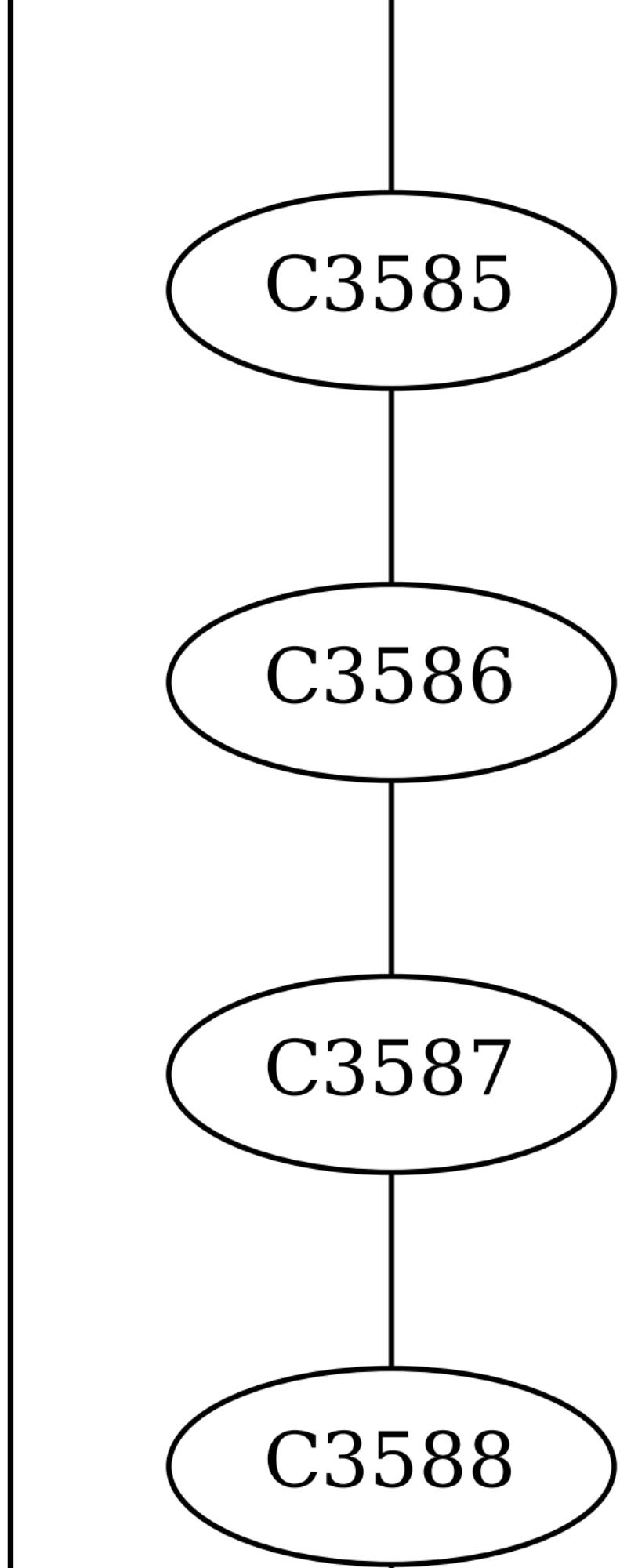
C3585
C3586
C3587
C3588

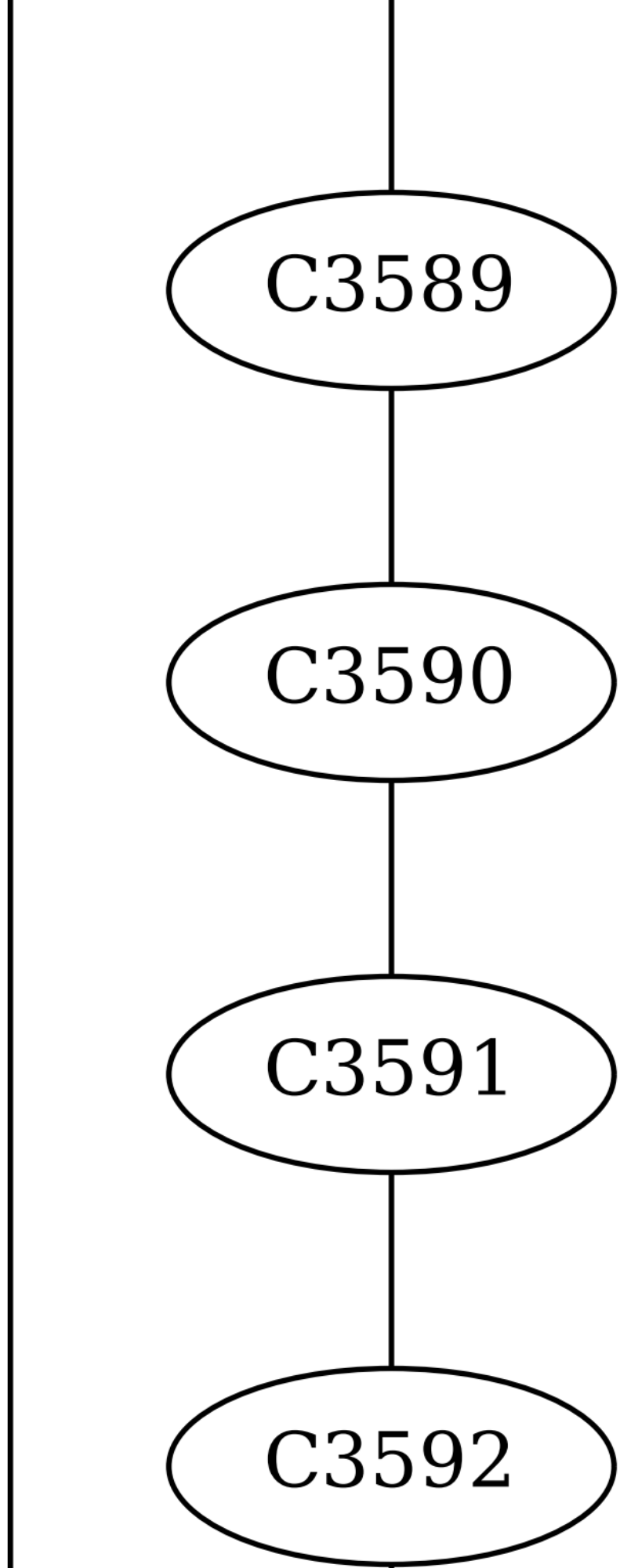
C3589
C3590
C3591
C3592

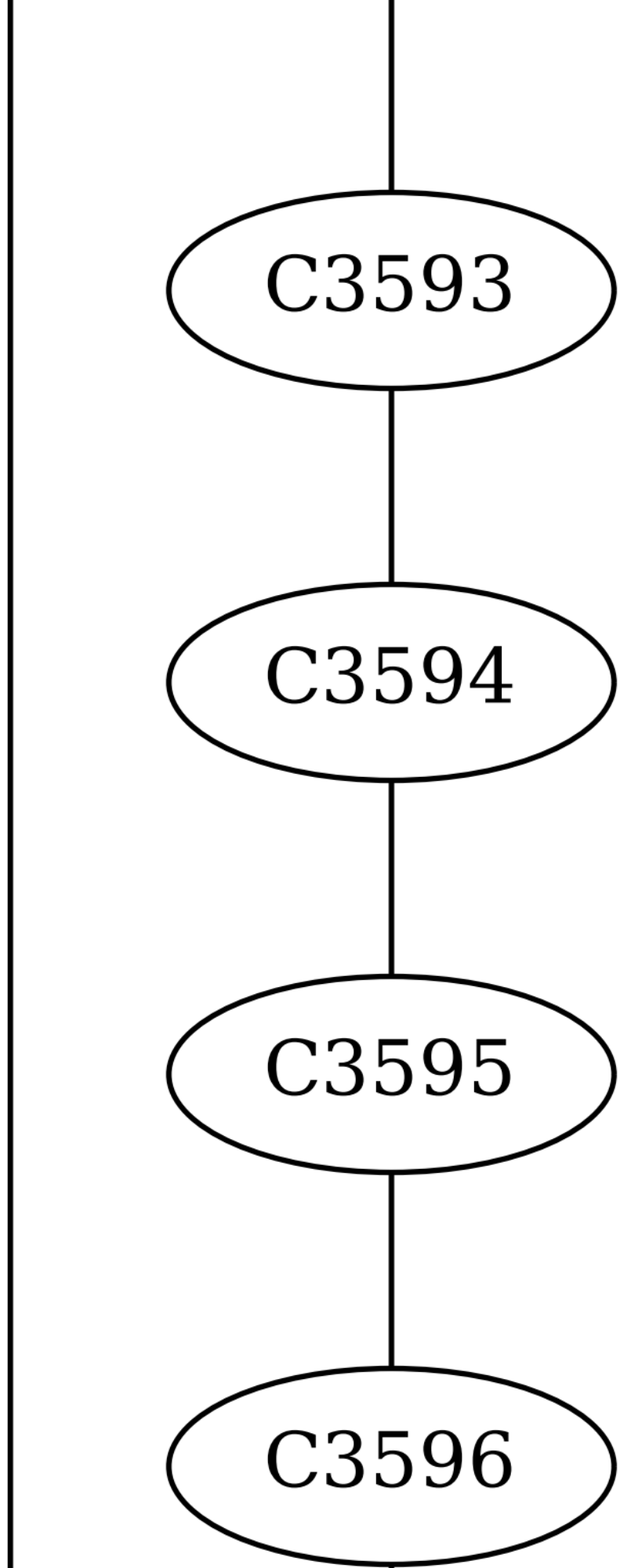
C3593
C3594
C3595
C3596

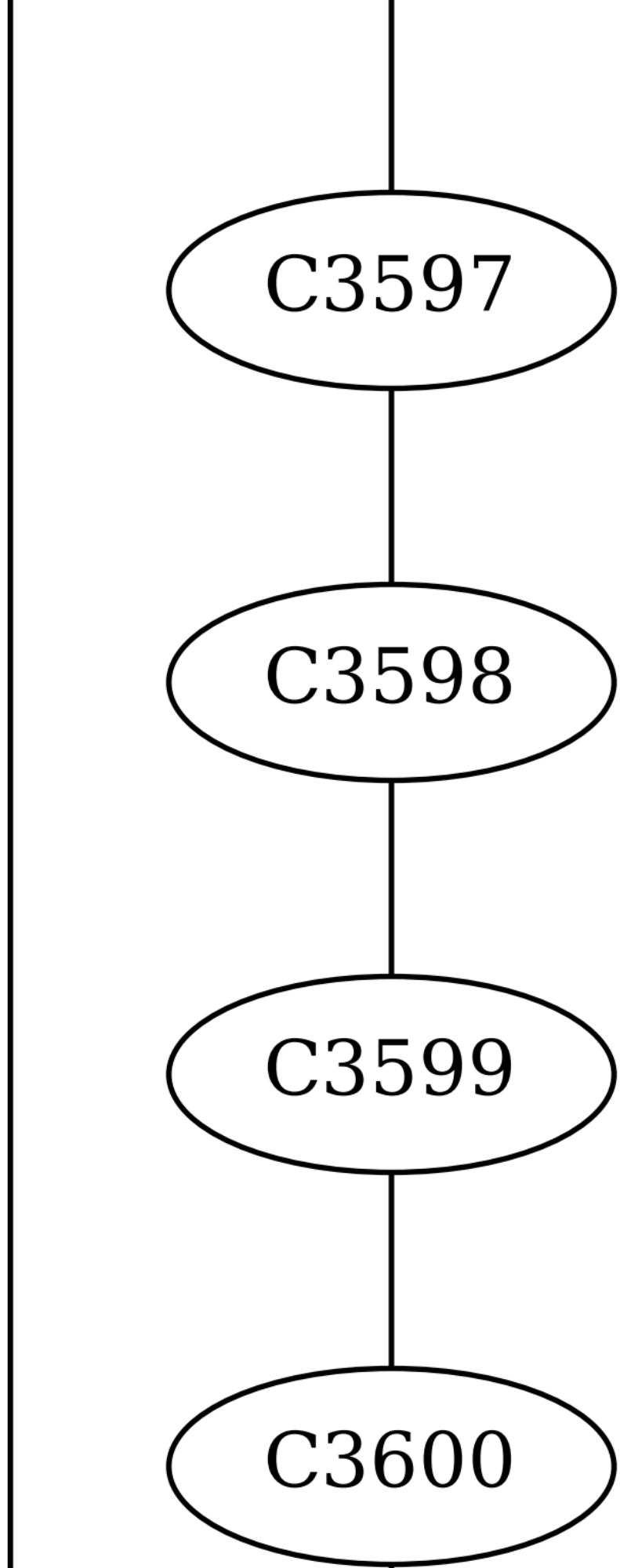
C3597
C3598
C3599
C3600

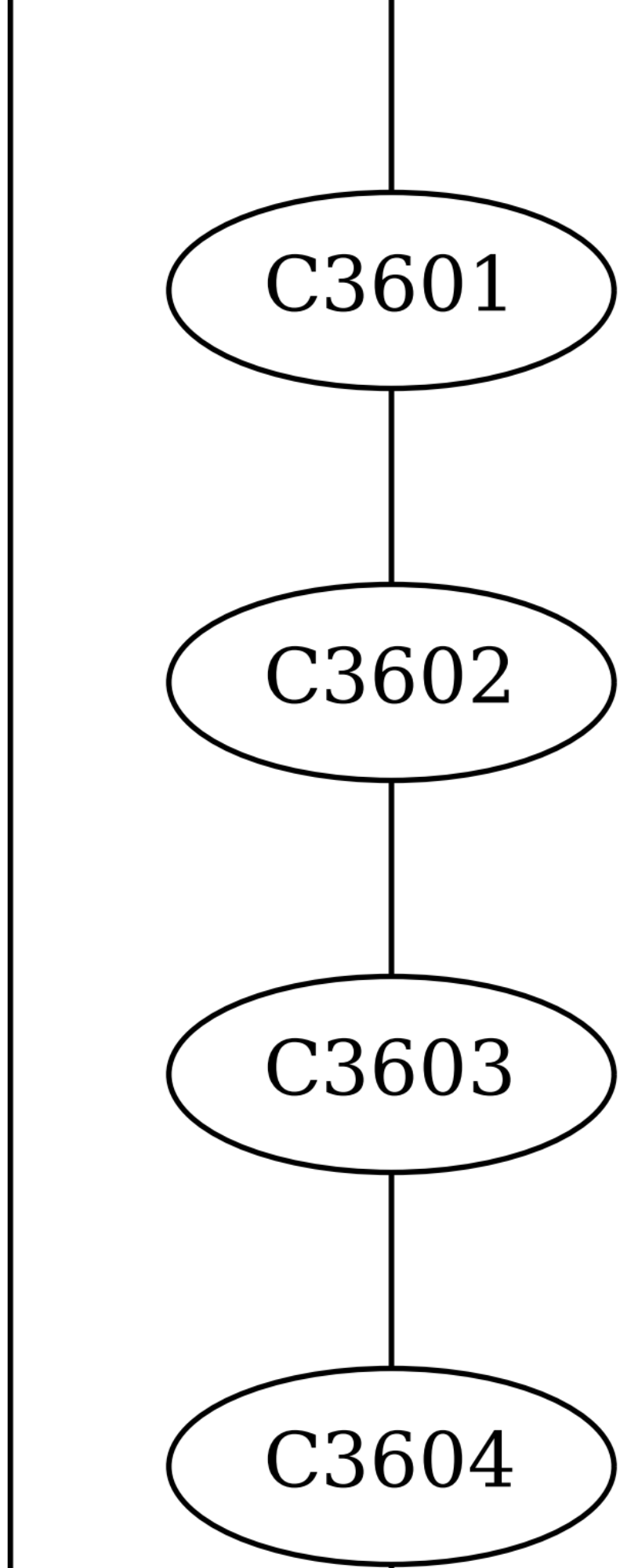
C3601
C3602
C3603
C3604

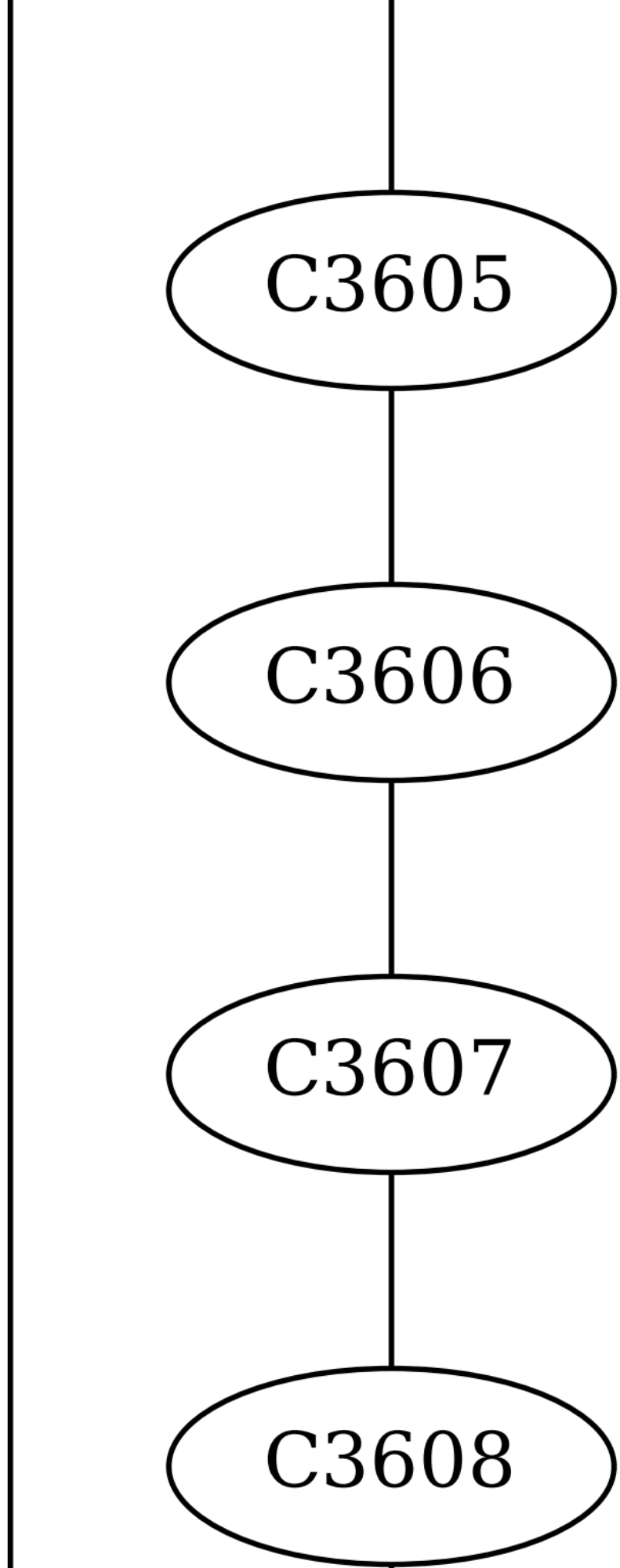
C3605
C3606
C3607
C3608

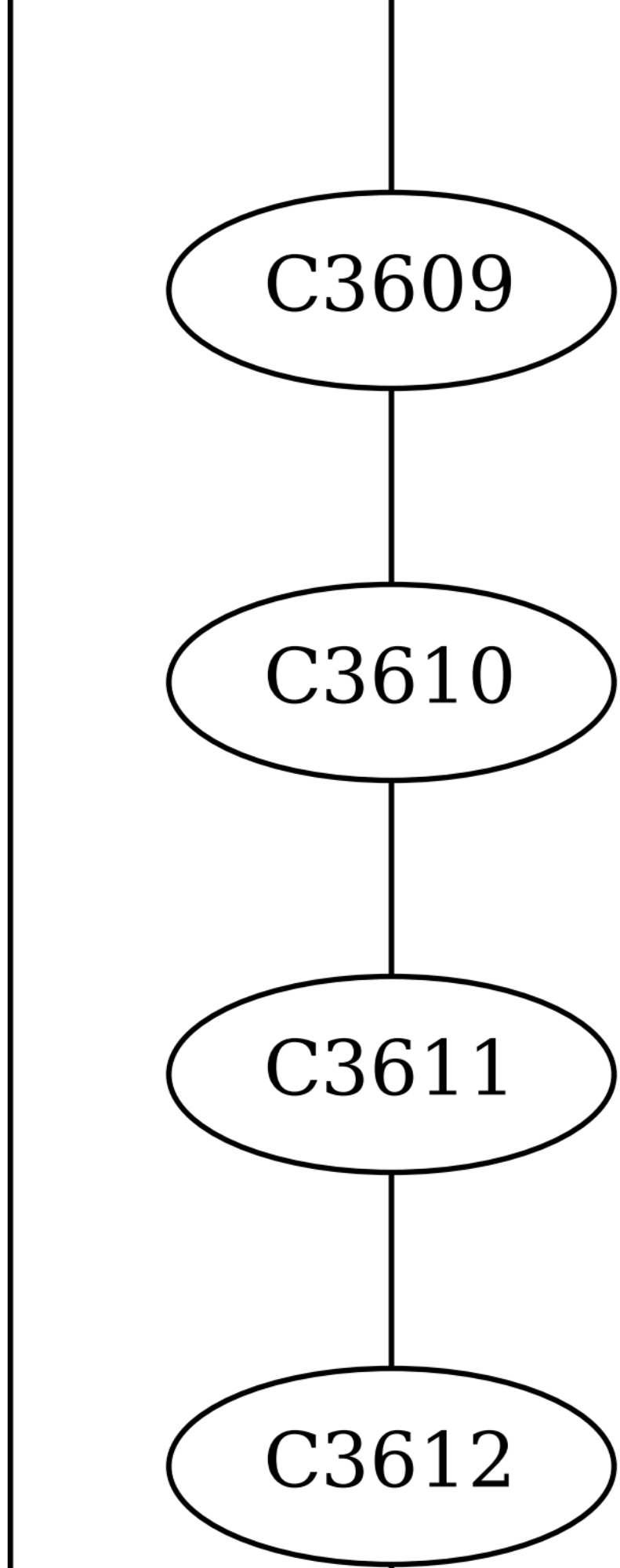
C3609
C3610
C3611
C3612

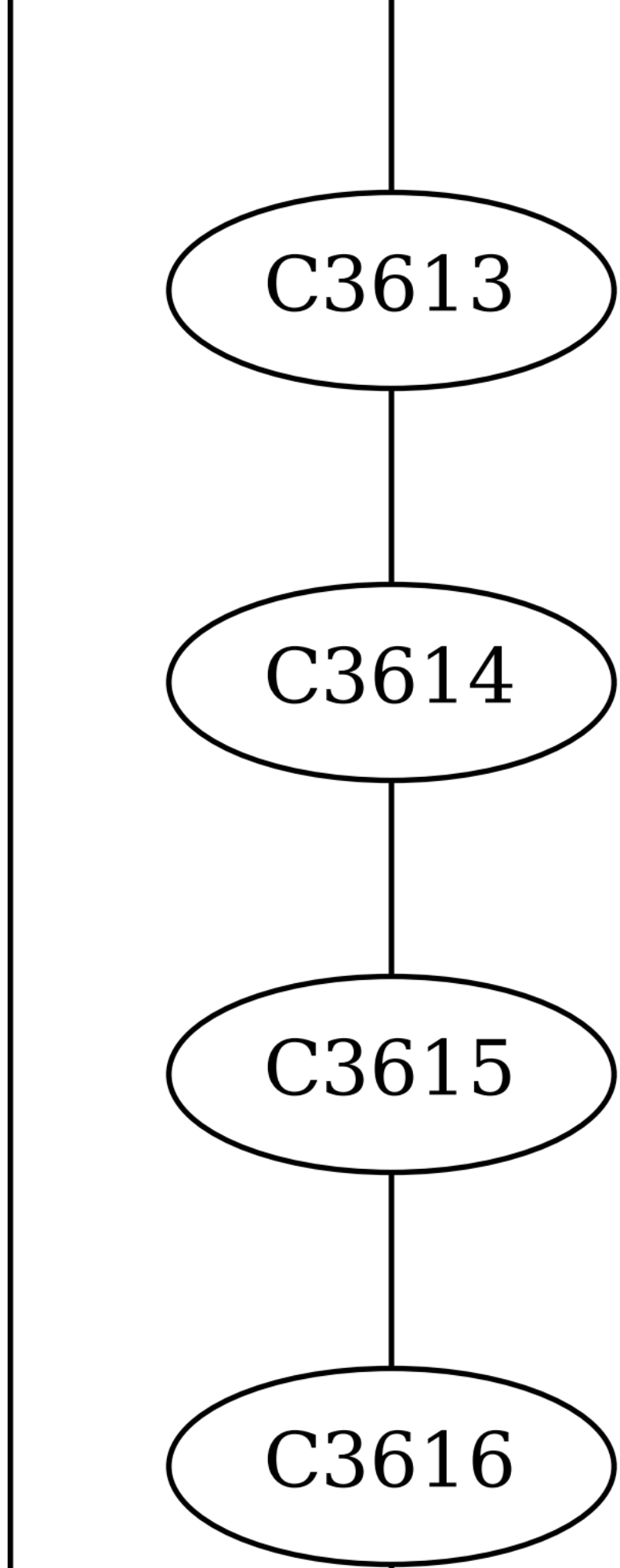
C3613
C3614
C3615
C3616

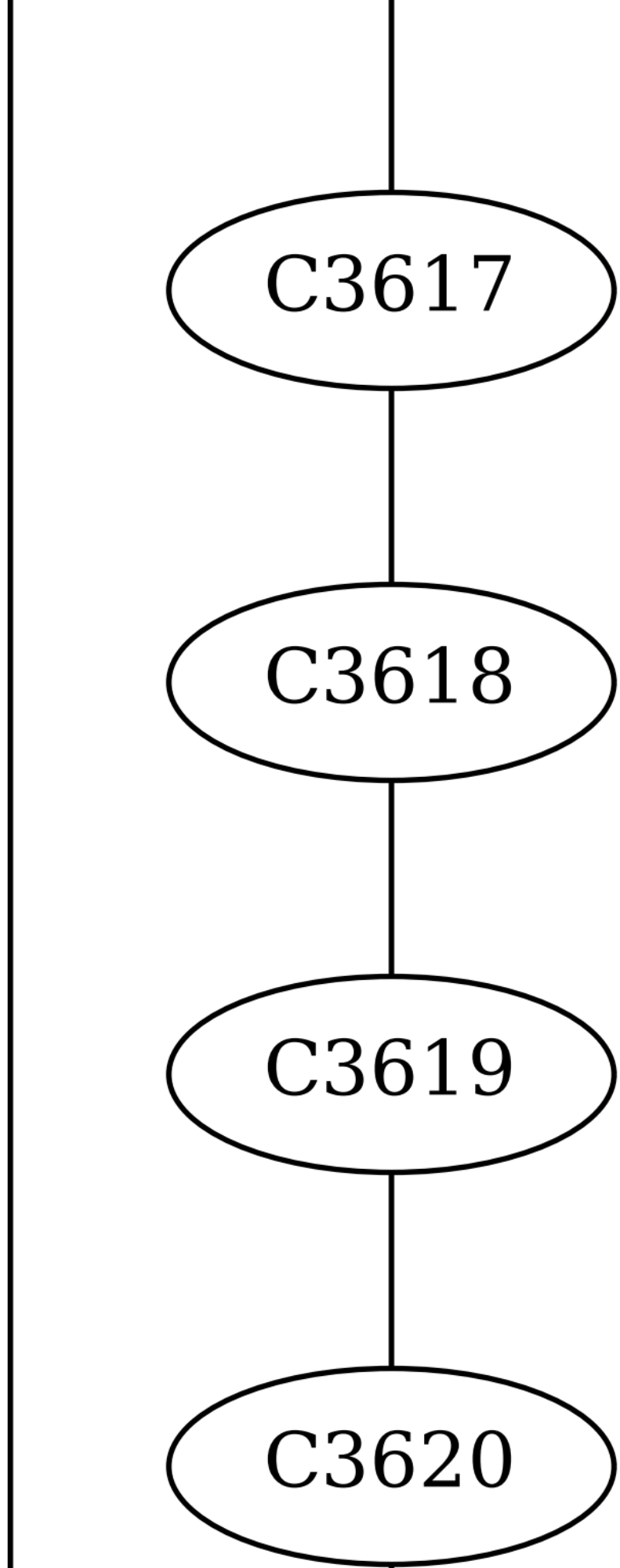
C3617
C3618
C3619
C3620

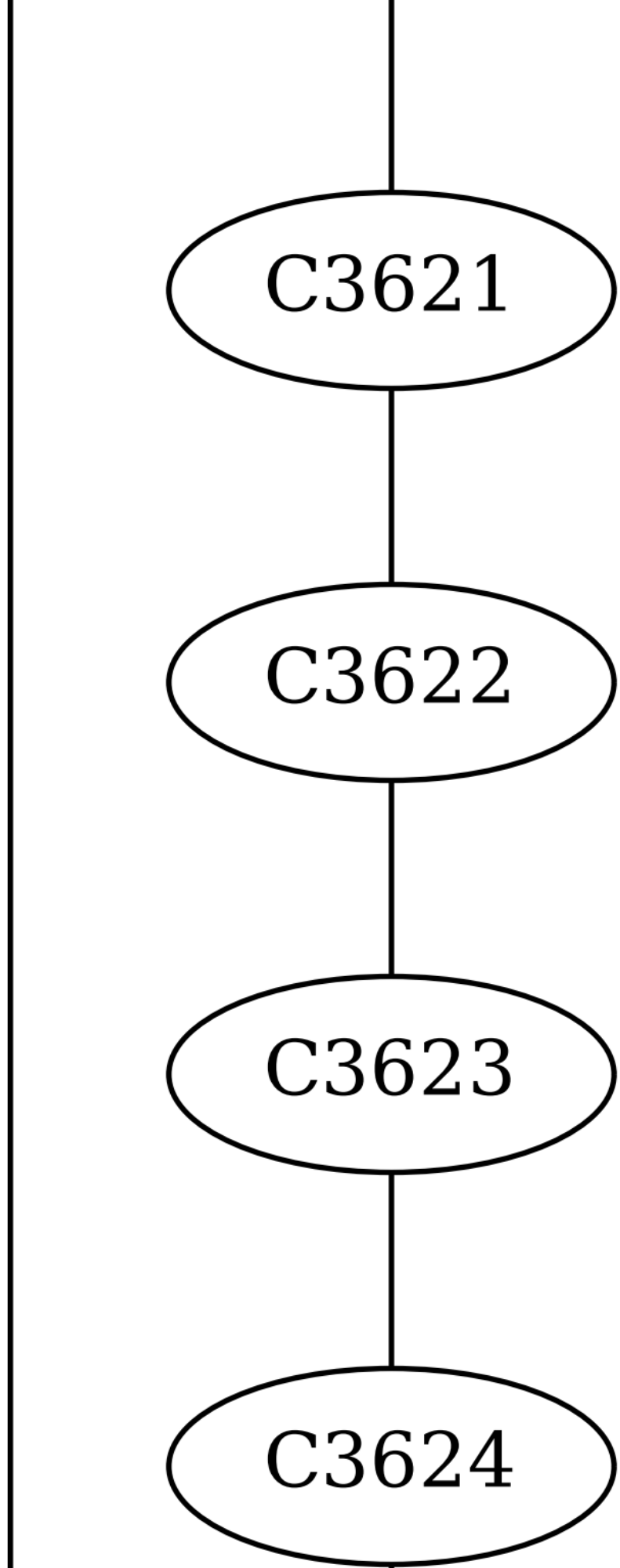
C3621
C3622
C3623
C3624

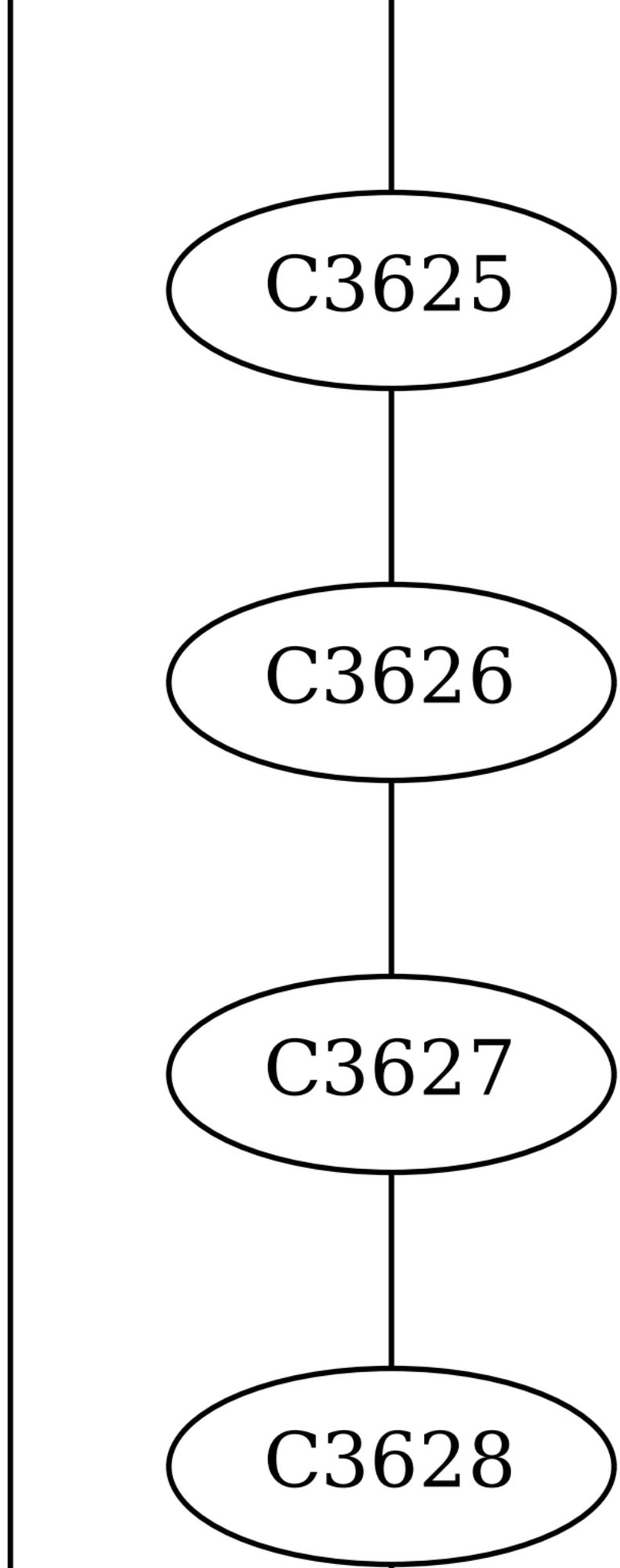
C3625
C3626
C3627
C3628

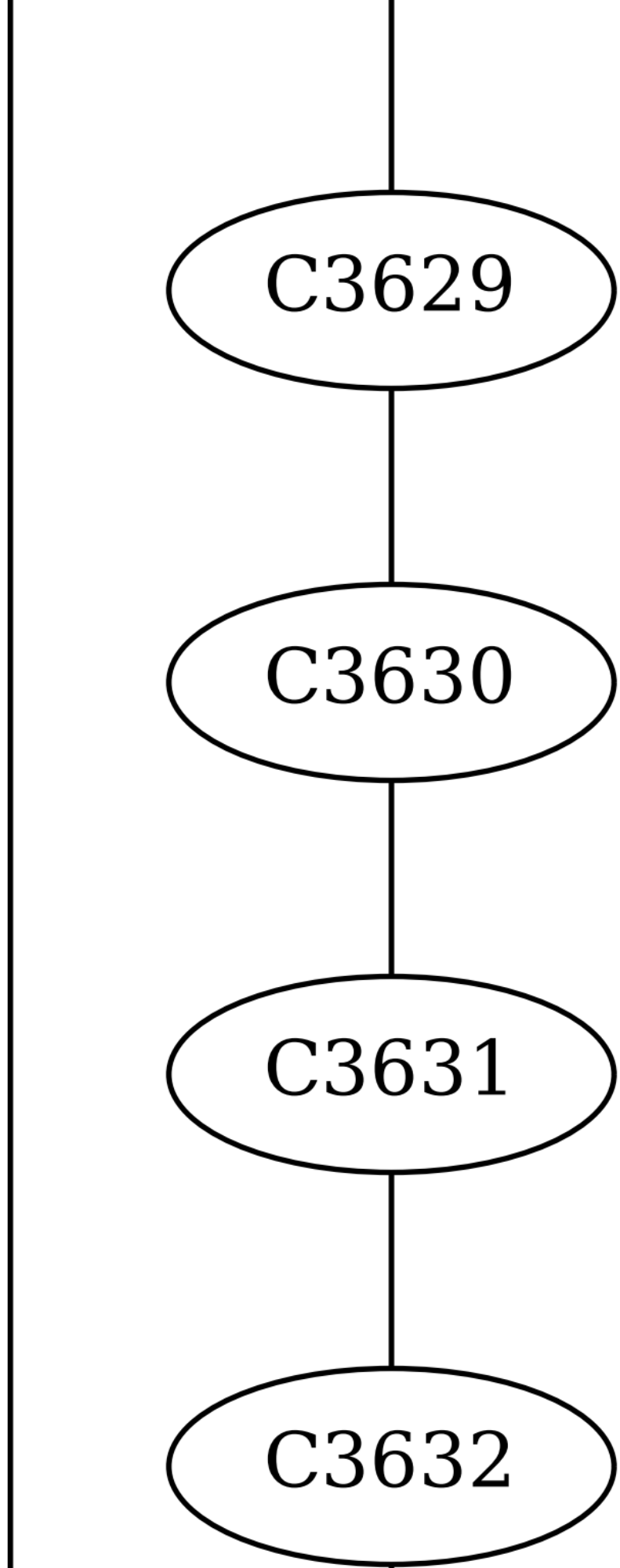
C3629
C3630
C3631
C3632

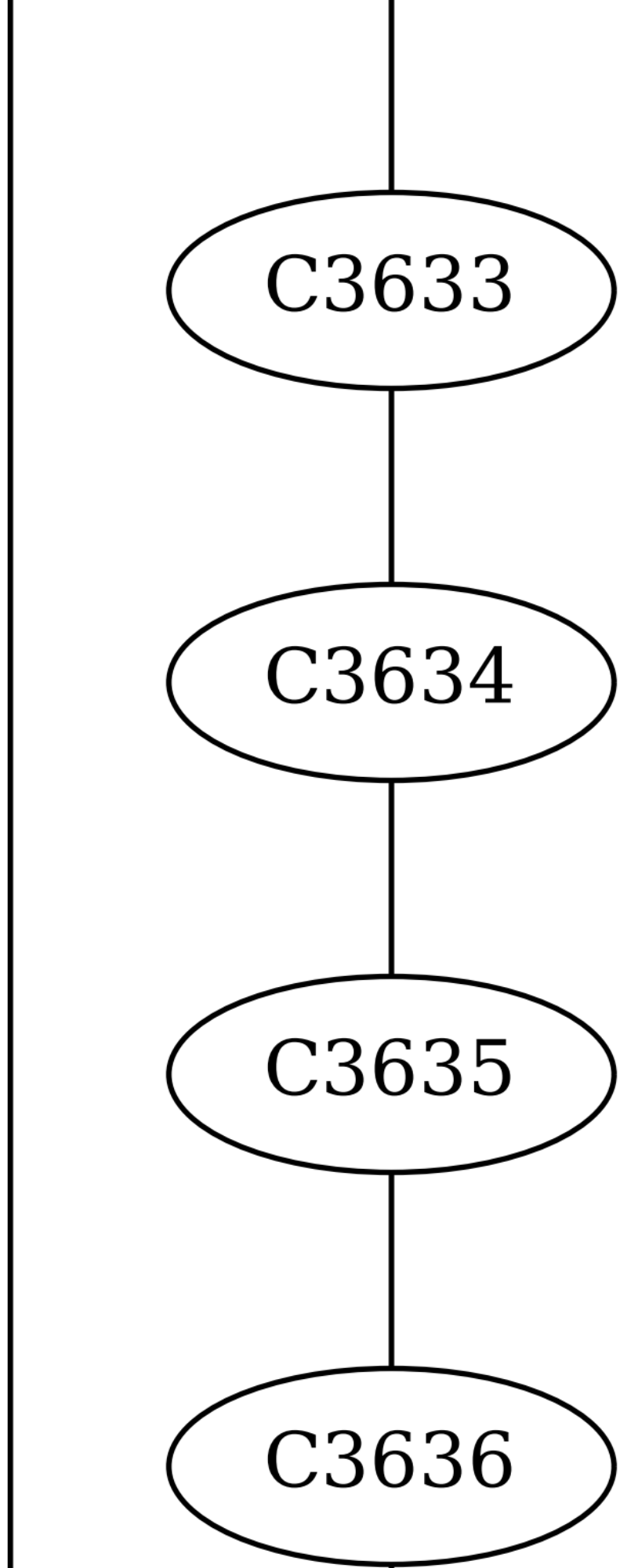
C3633
C3634
C3635
C3636

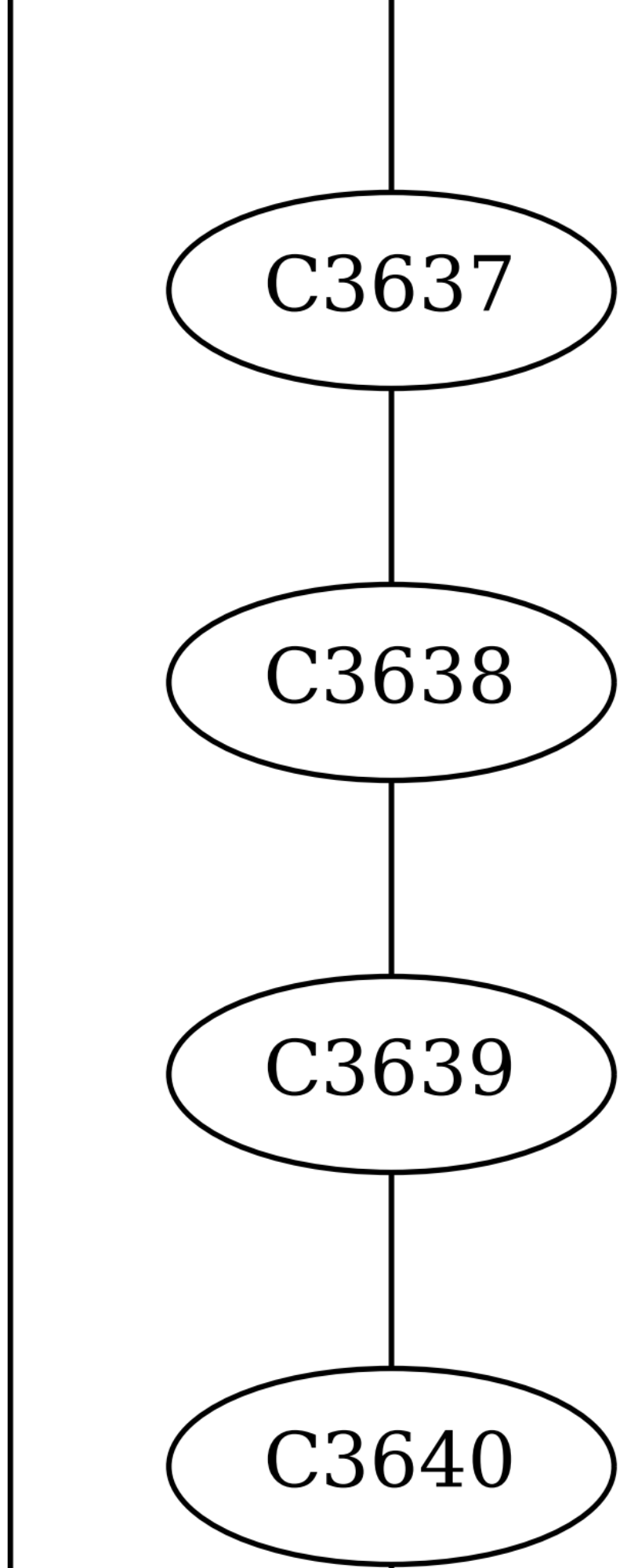
C3637
C3638
C3639
C3640

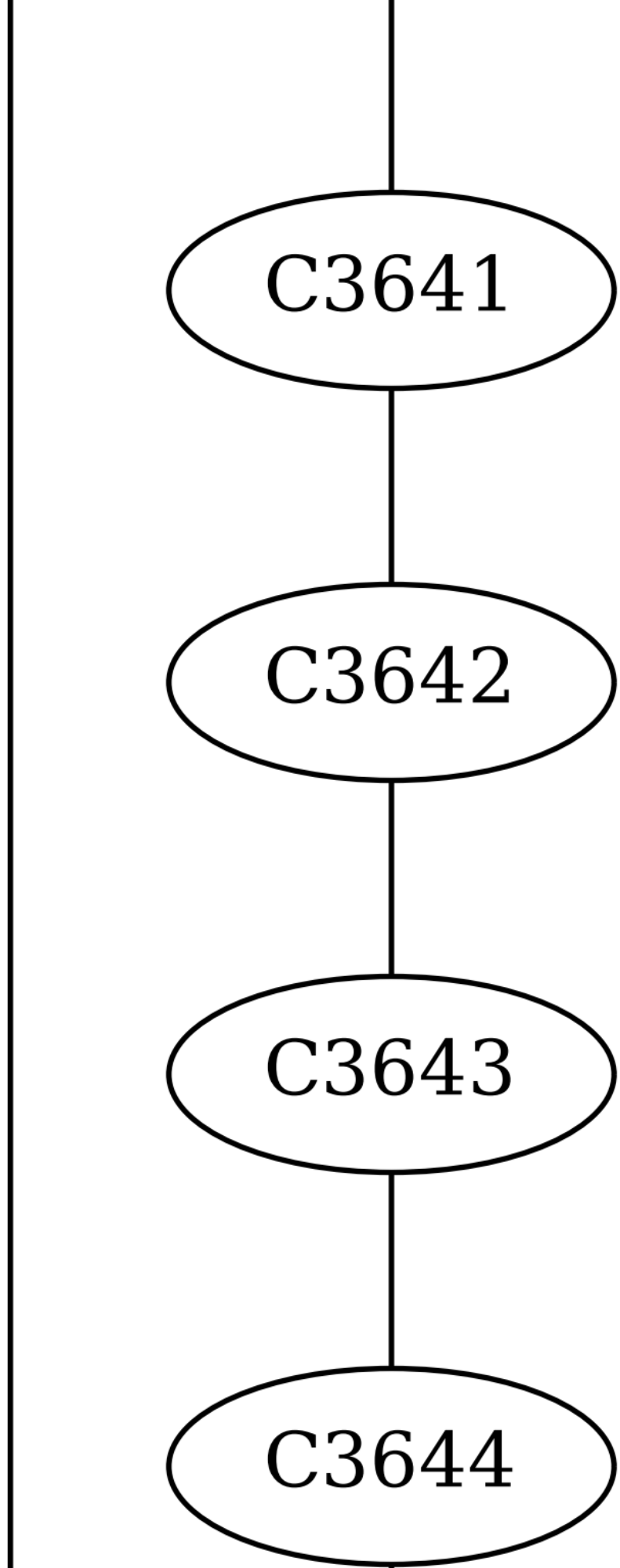
C3641
C3642
C3643
C3644

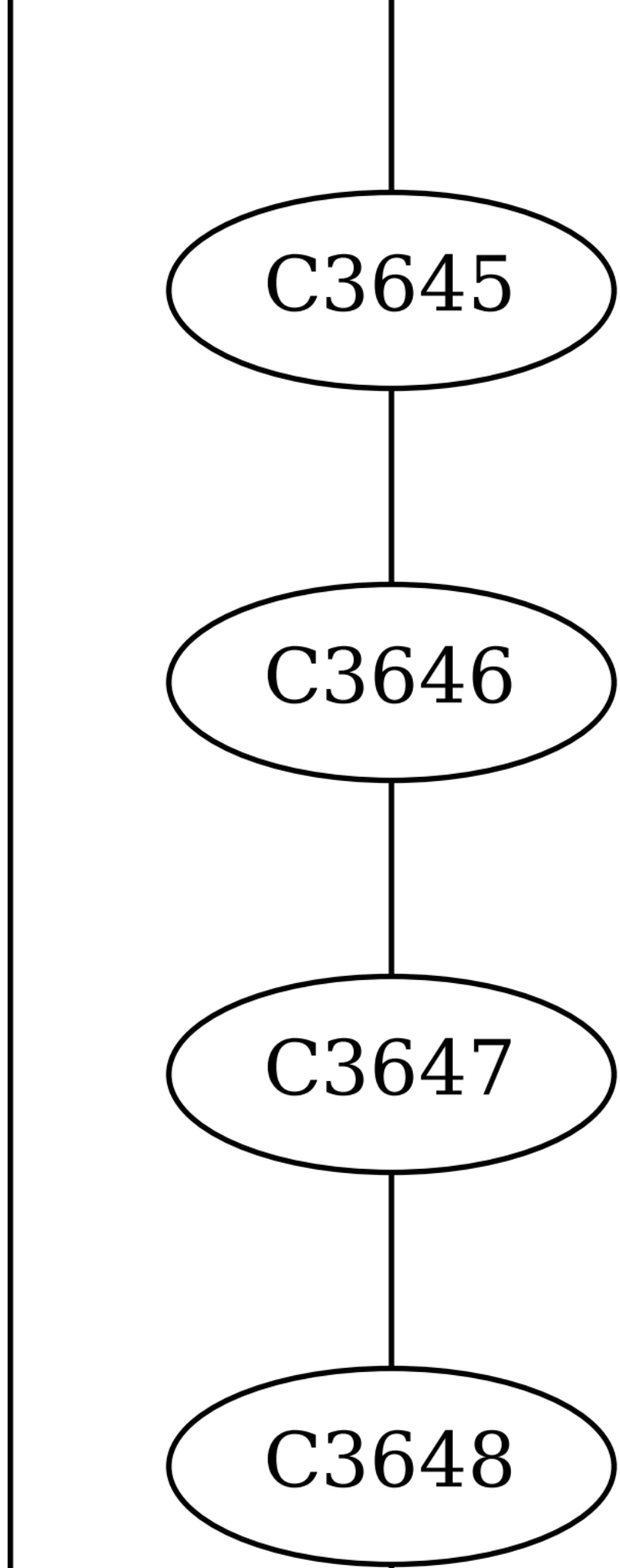
C3645
C3646
C3647
C3648

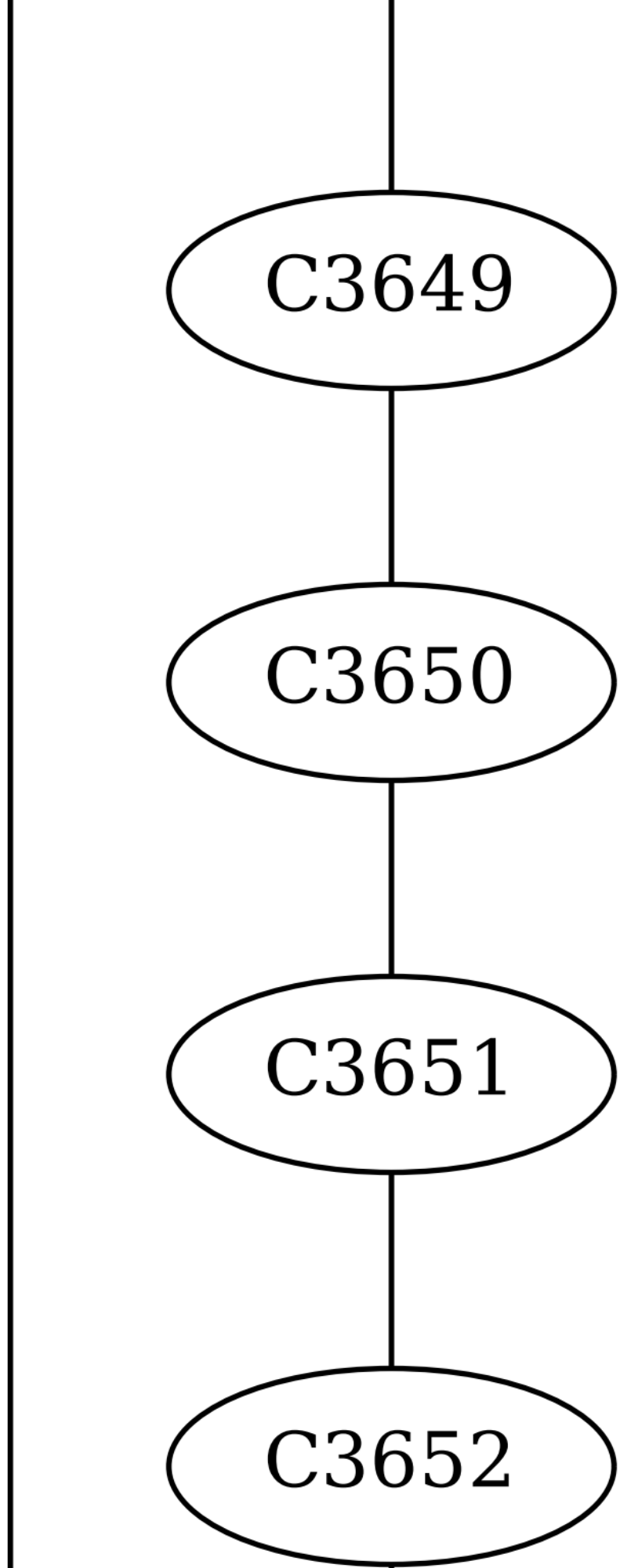
C3649
C3650
C3651
C3652

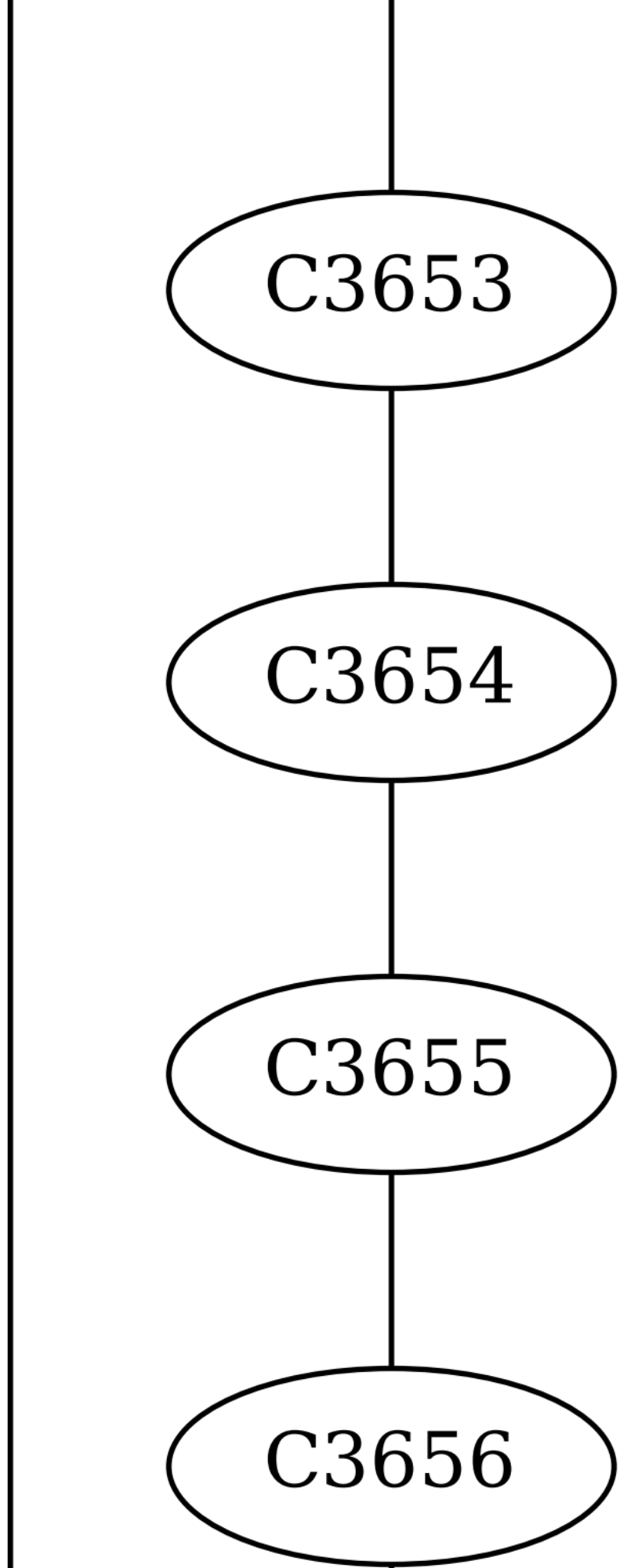
C3653
C3654
C3655
C3656

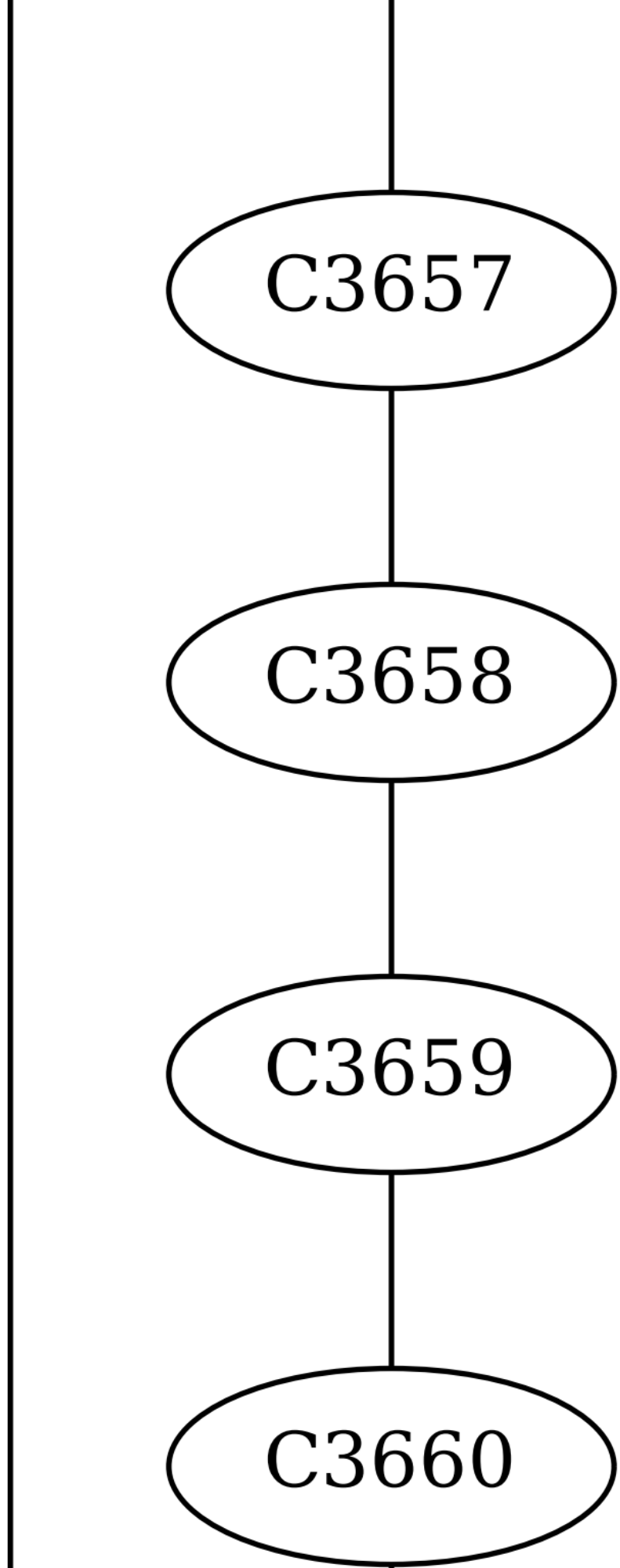
C3657
C3658
C3659
C3660

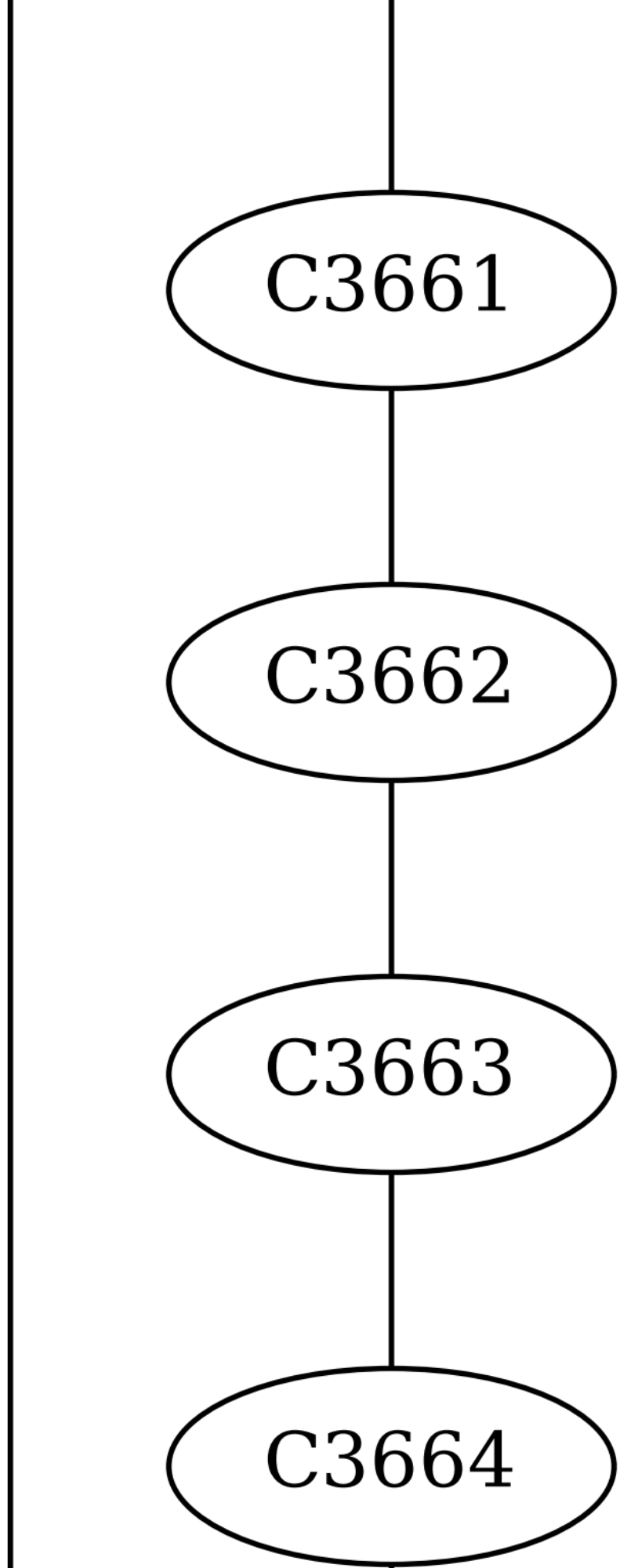
C3661
C3662
C3663
C3664

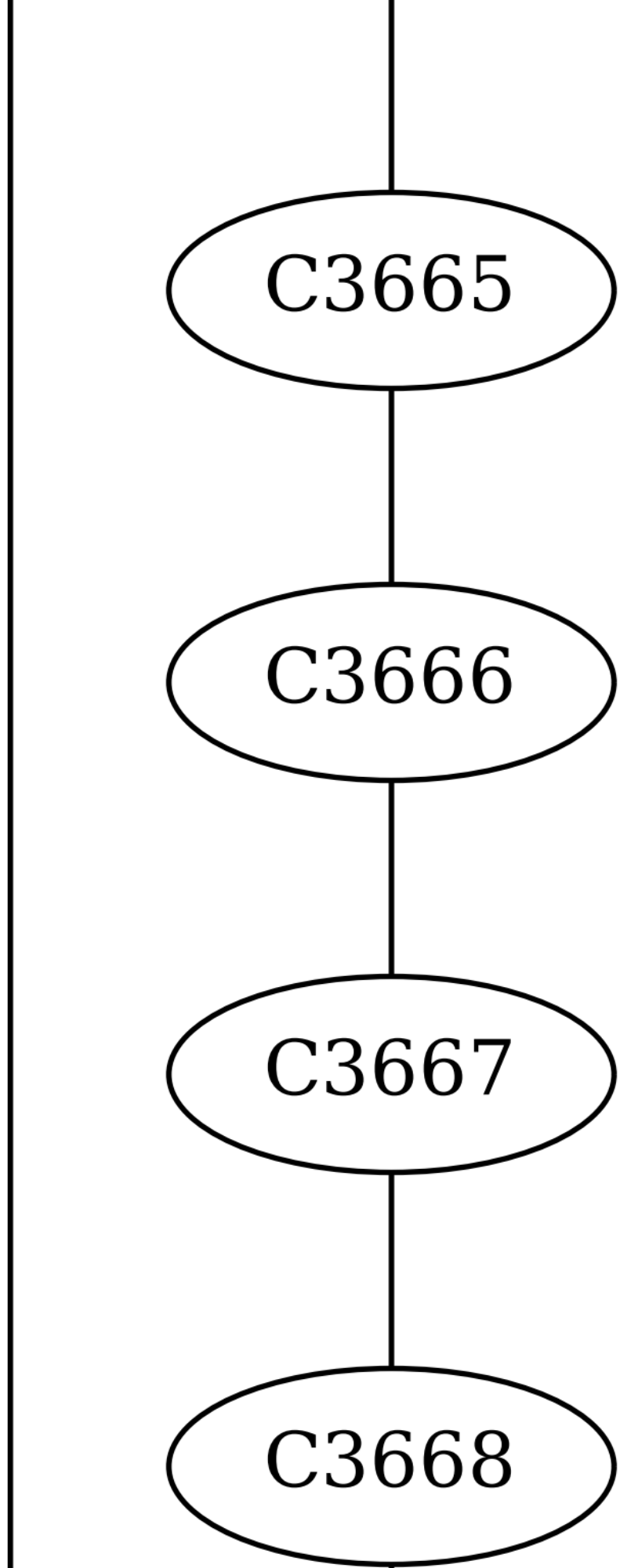
C3665
C3666
C3667
C3668

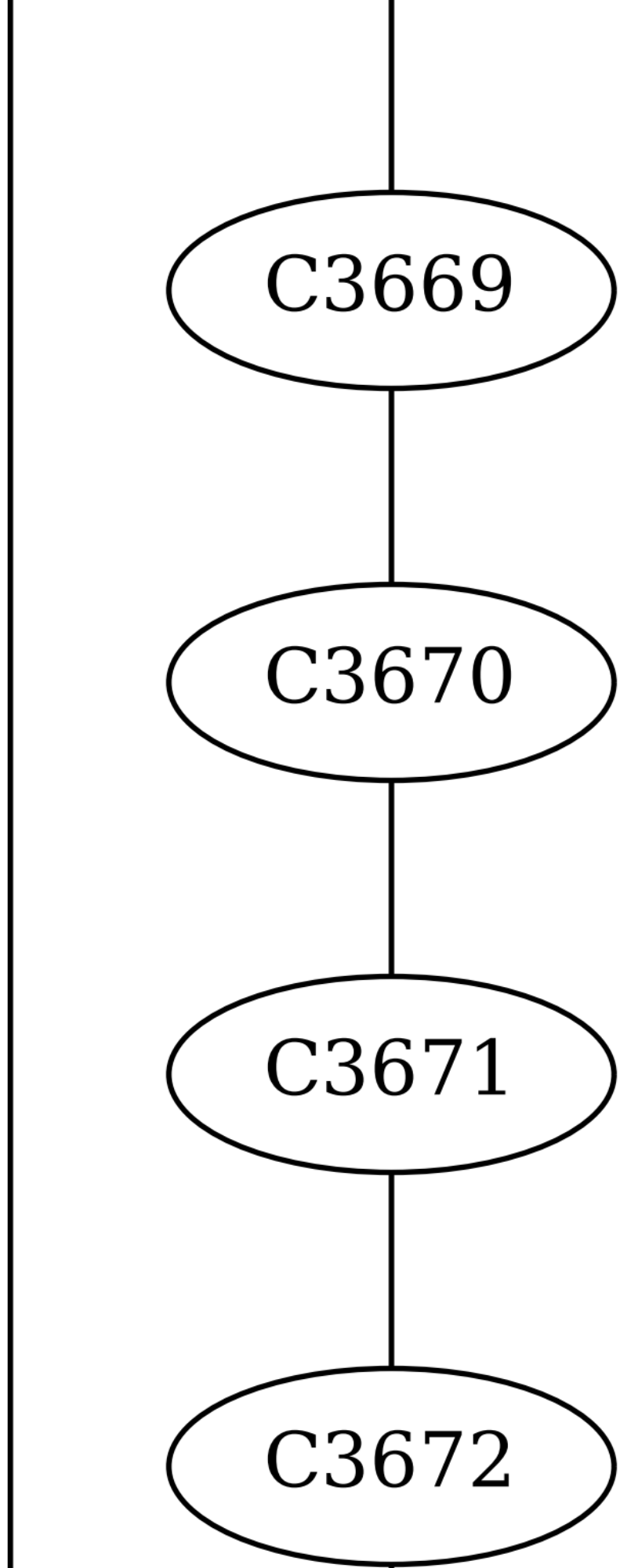
C3669
C3670
C3671
C3672

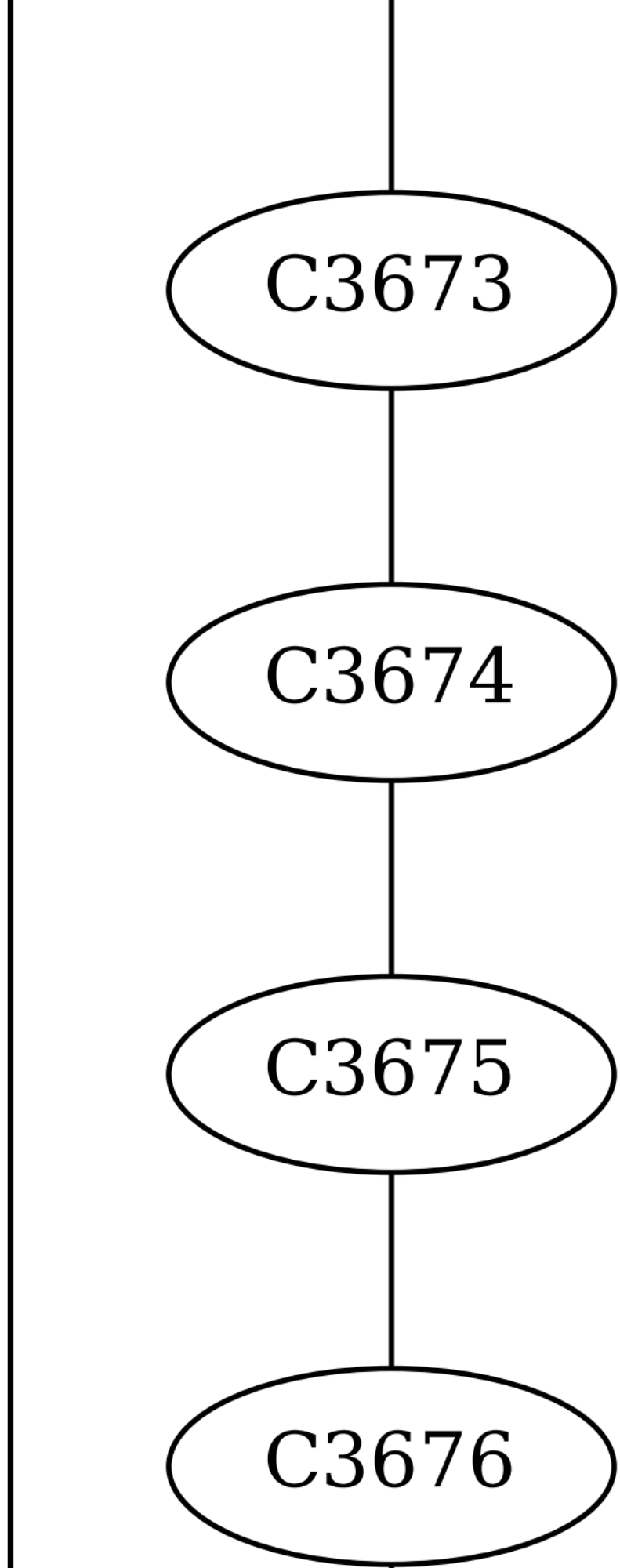
C3673
C3674
C3675
C3676

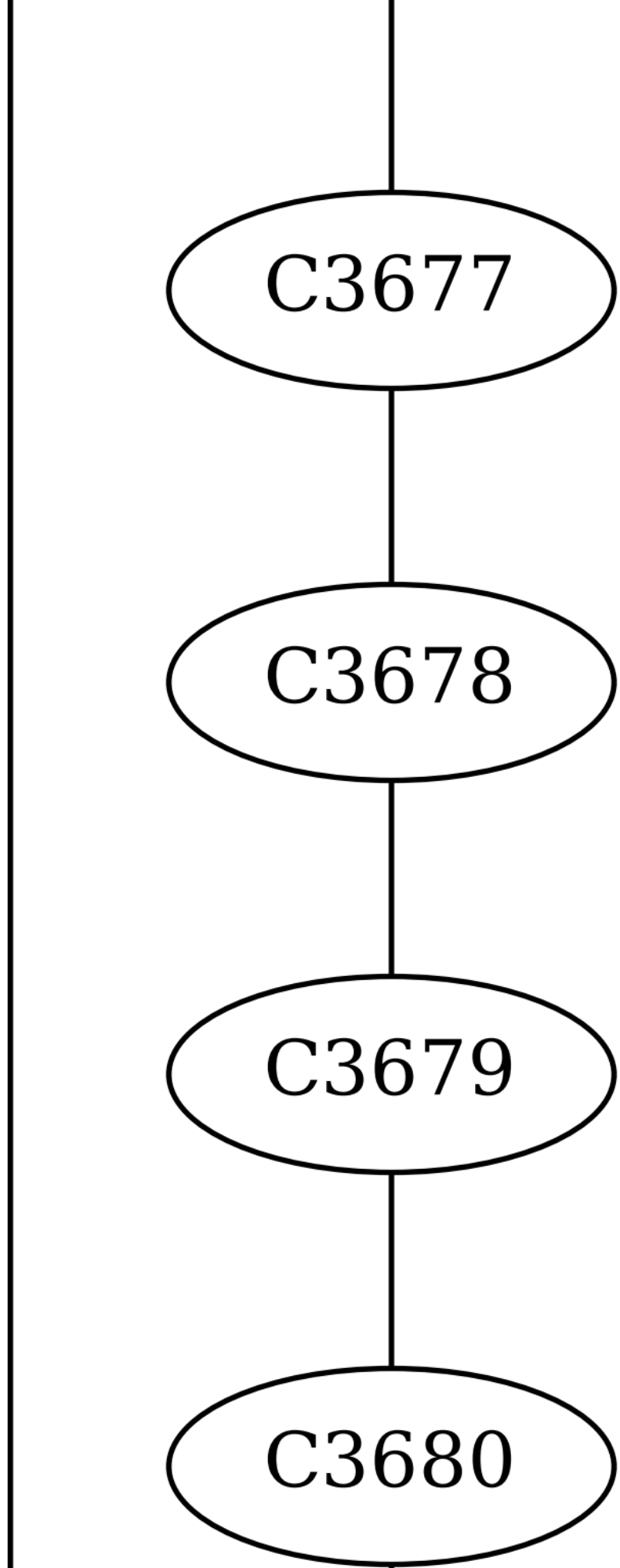
C3677
C3678
C3679
C3680

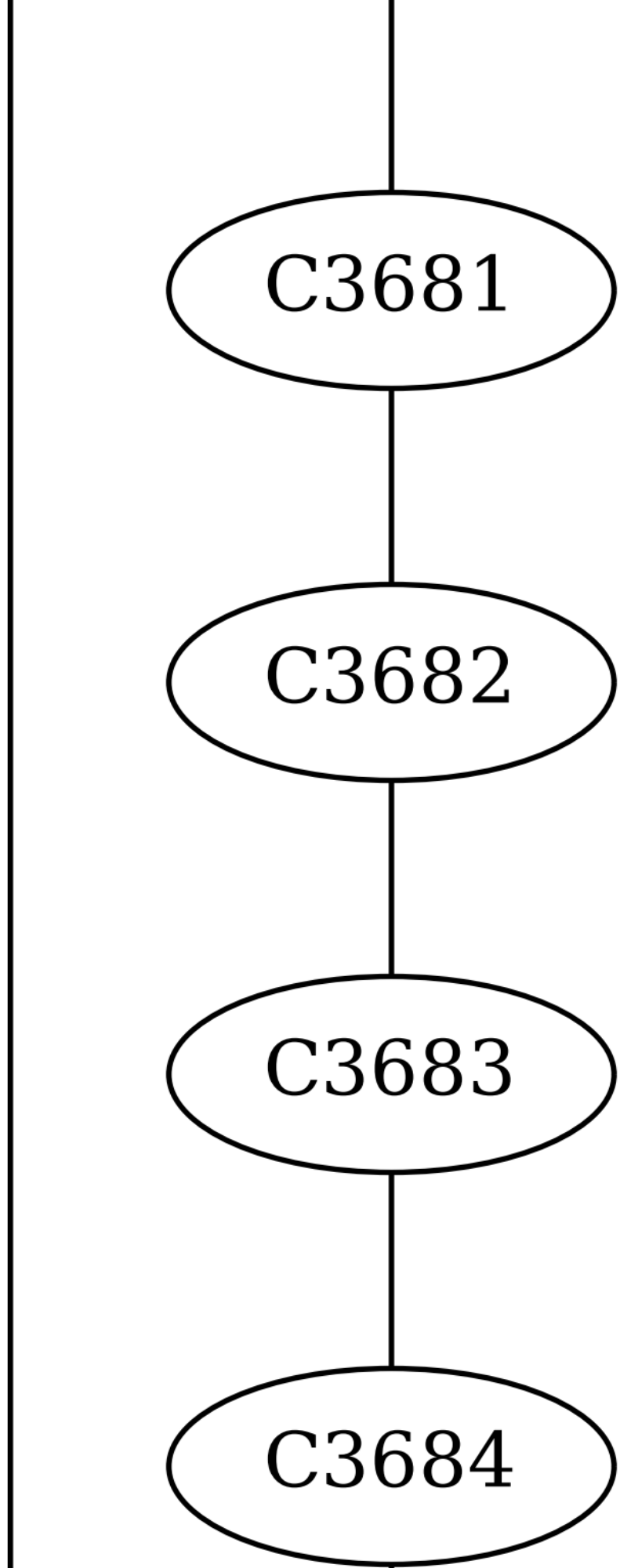
C3681
C3682
C3683
C3684

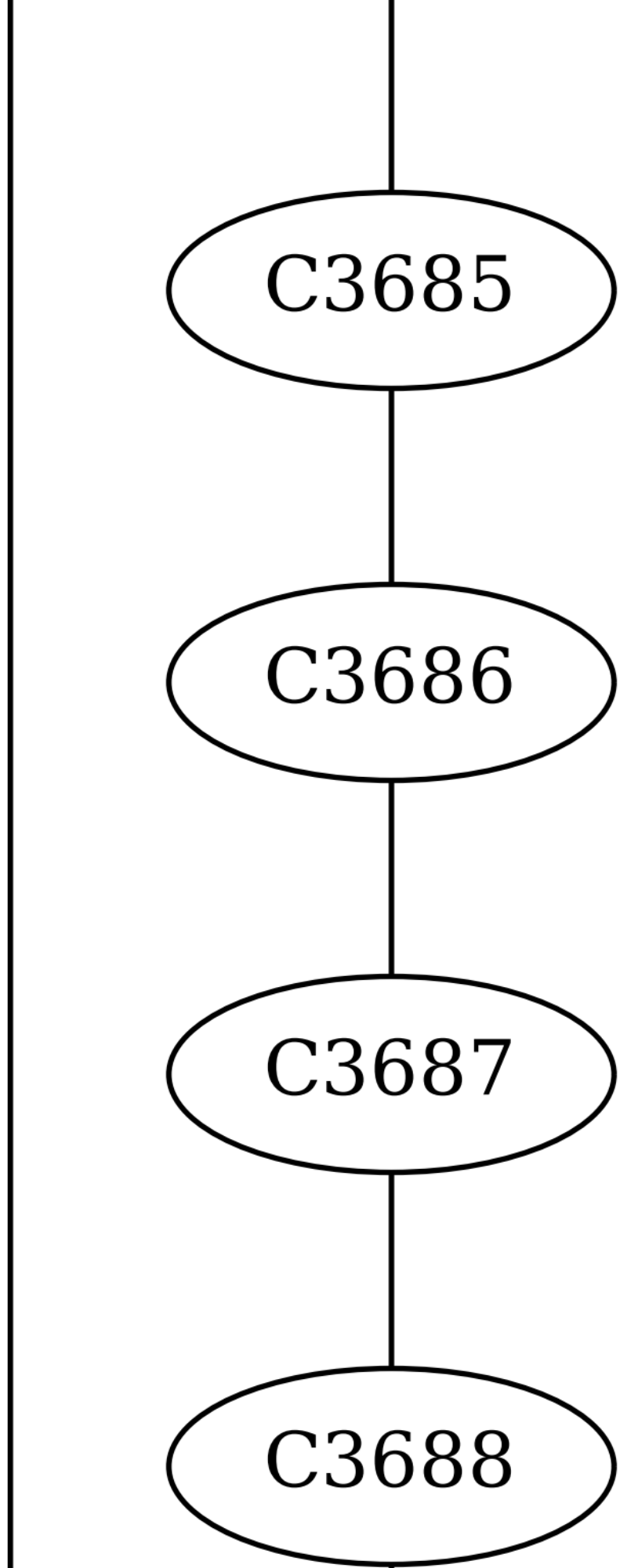
C3685
C3686
C3687
C3688

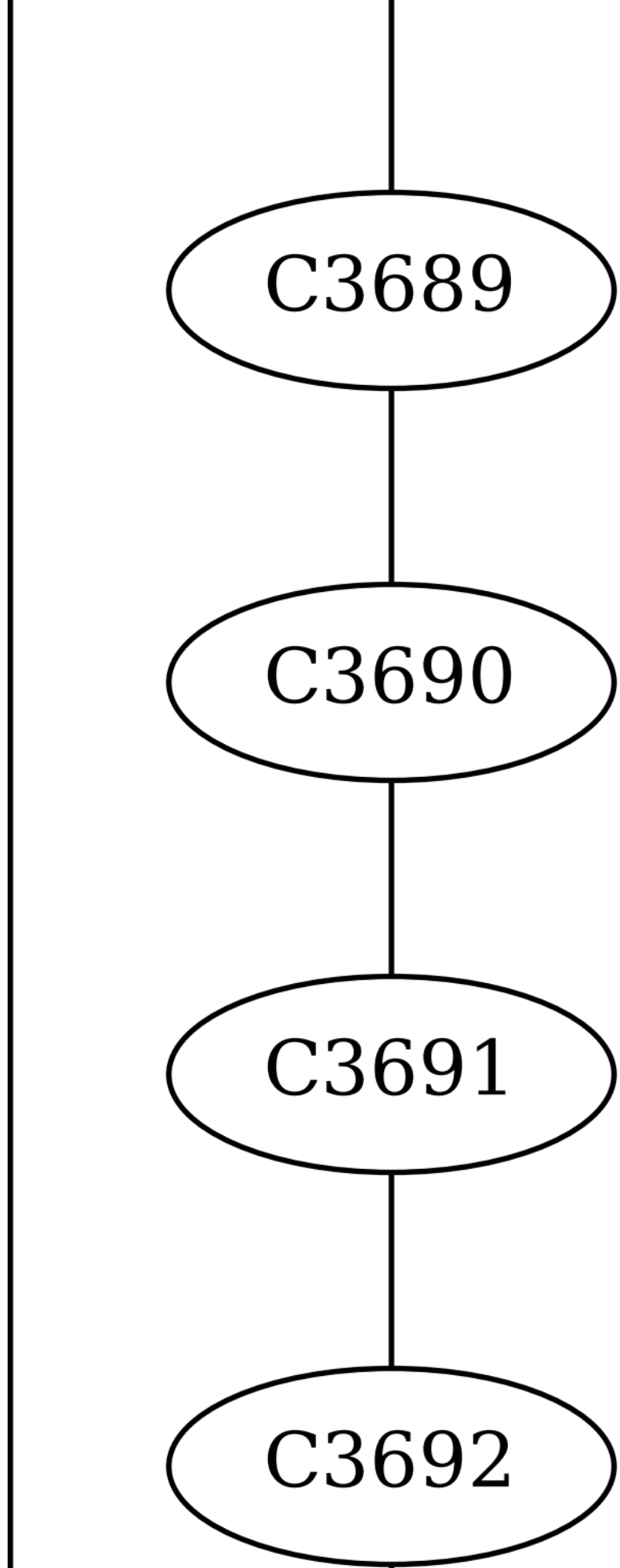
C3689
C3690
C3691
C3692

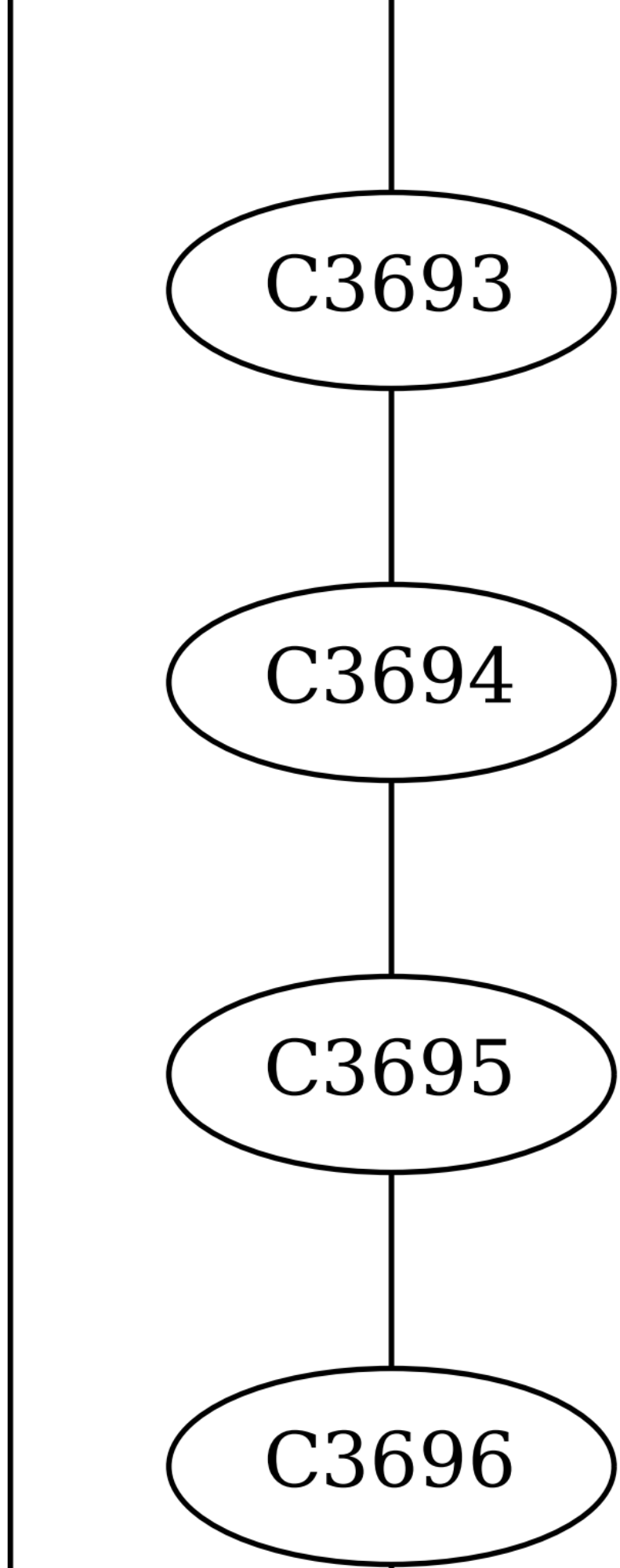
C3693
C3694
C3695
C3696

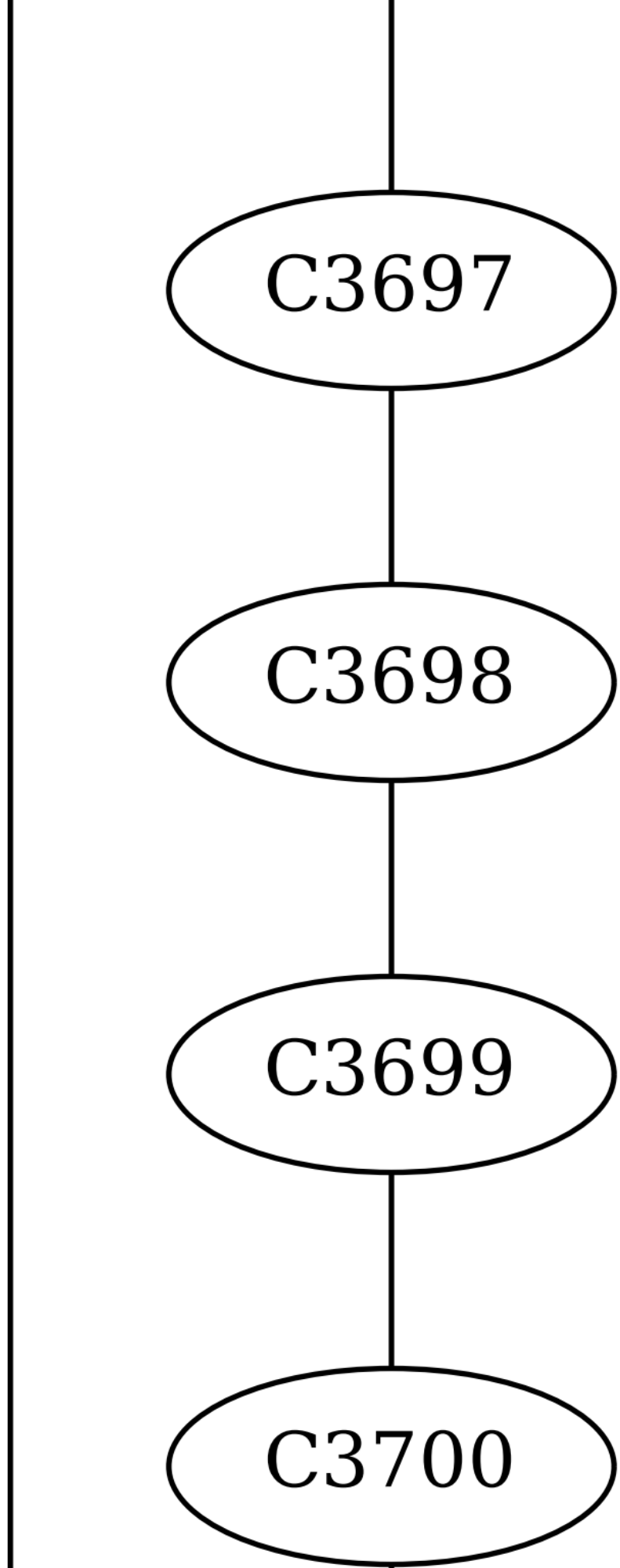
C3697
C3698
C3699
C3700

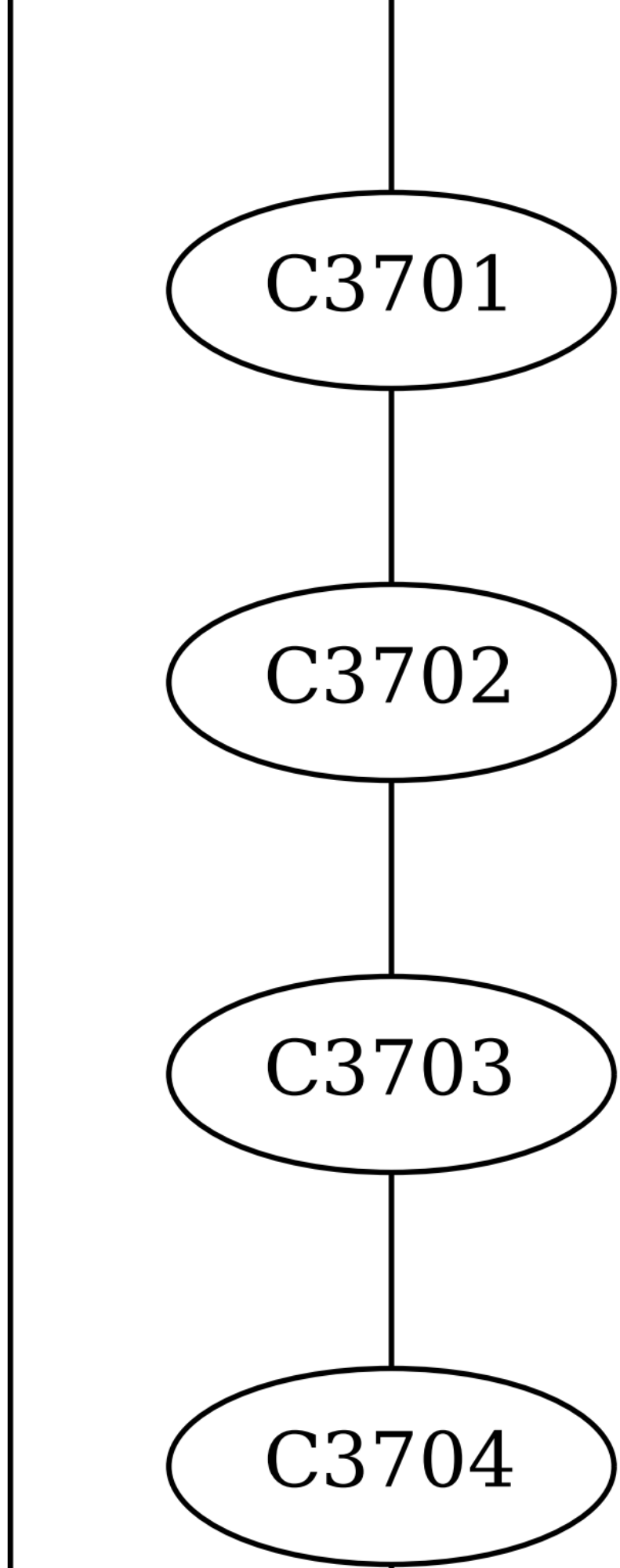
C3701
C3702
C3703
C3704

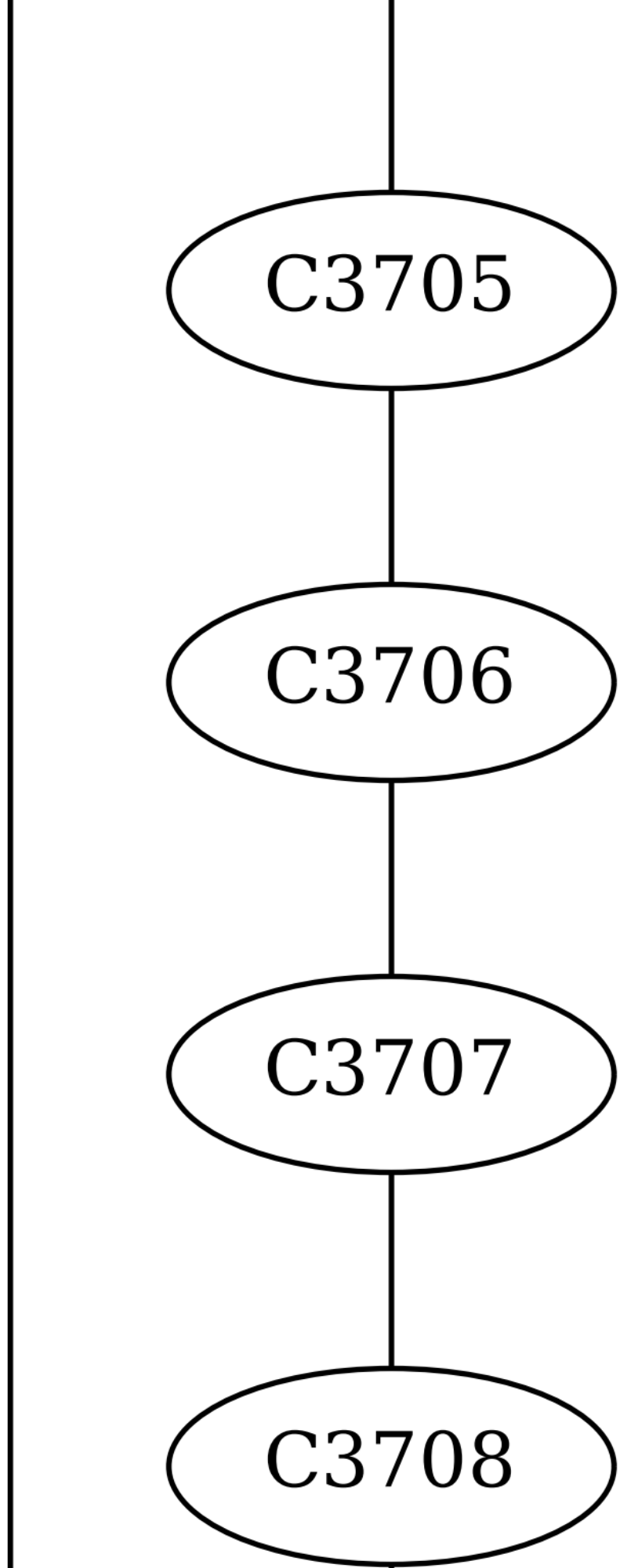
C3705
C3706
C3707
C3708

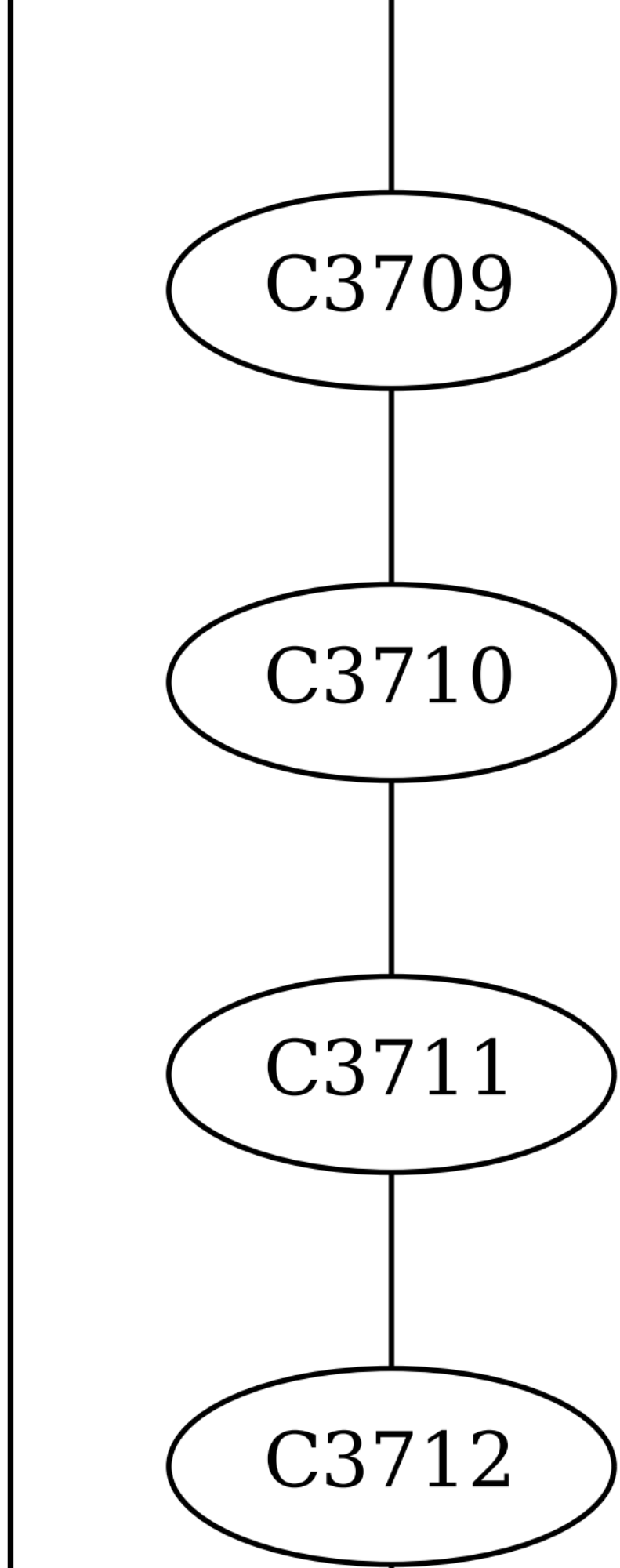
C3709
C3710
C3711
C3712

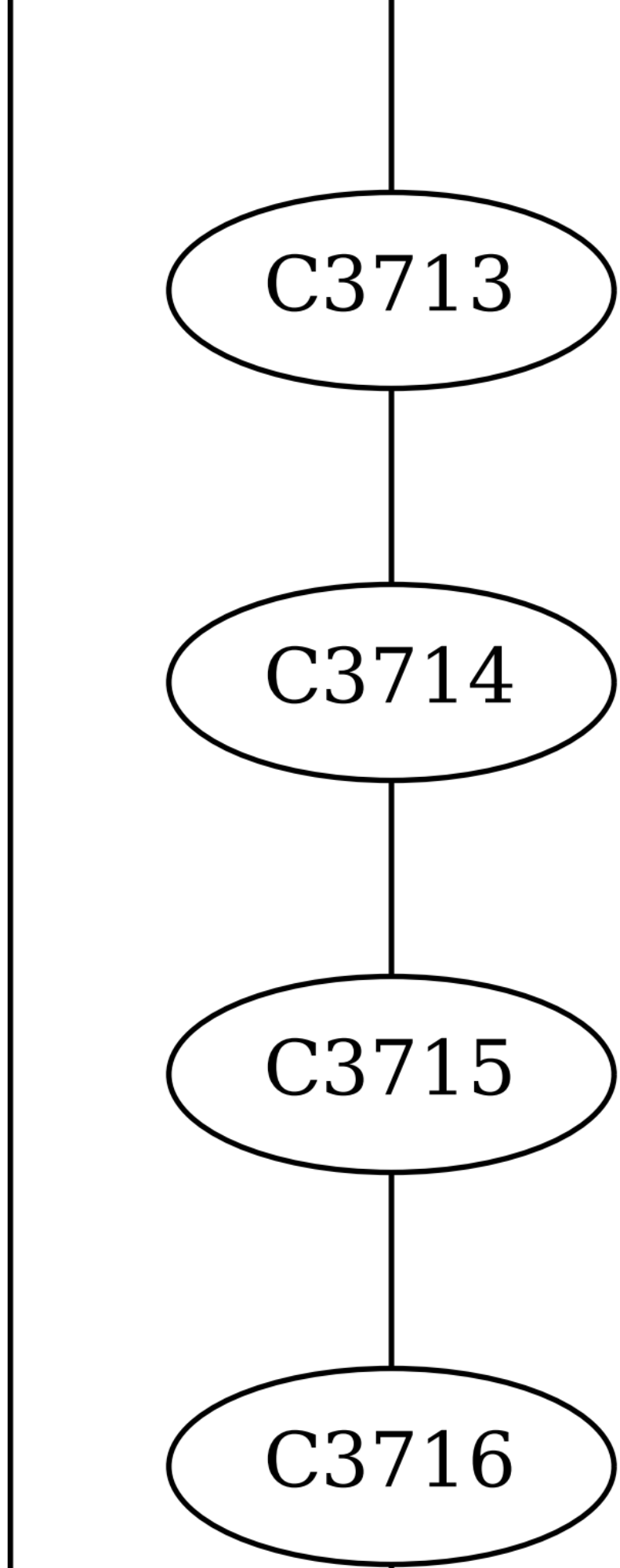
C3713
C3714
C3715
C3716

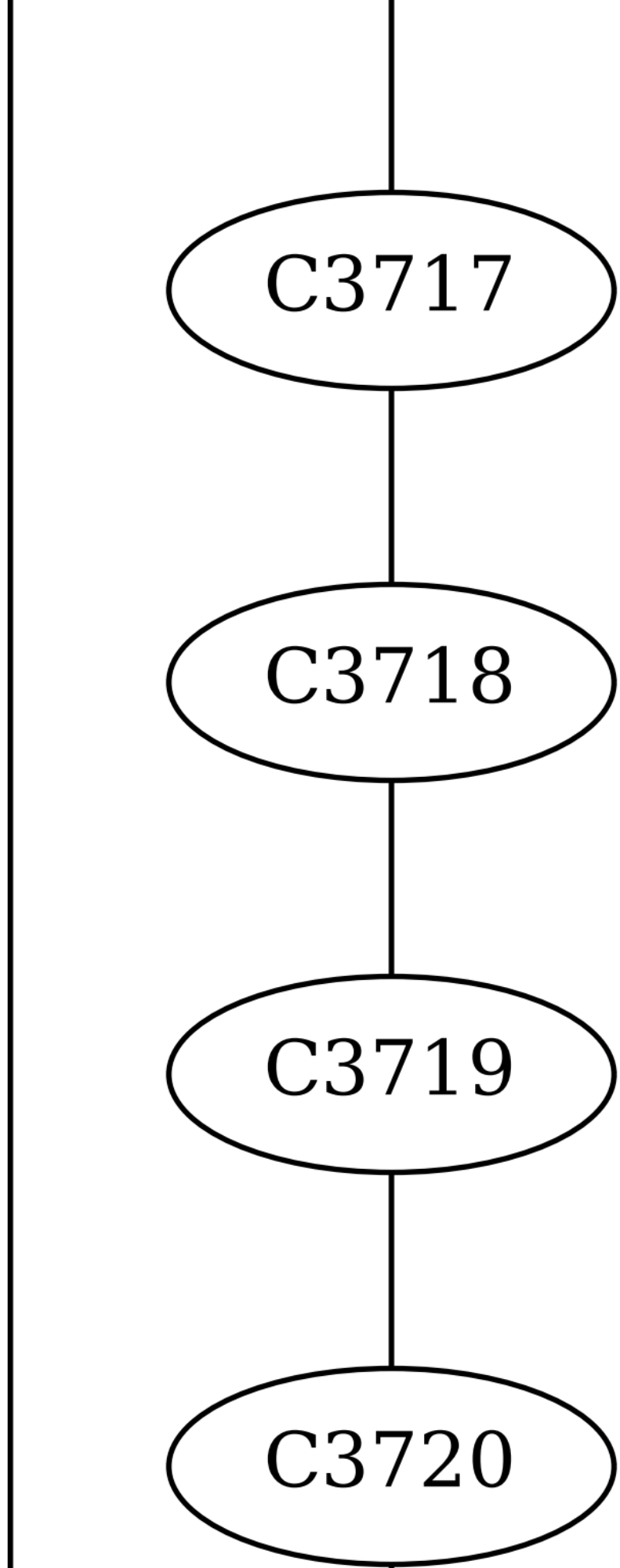
C3717
C3718
C3719
C3720

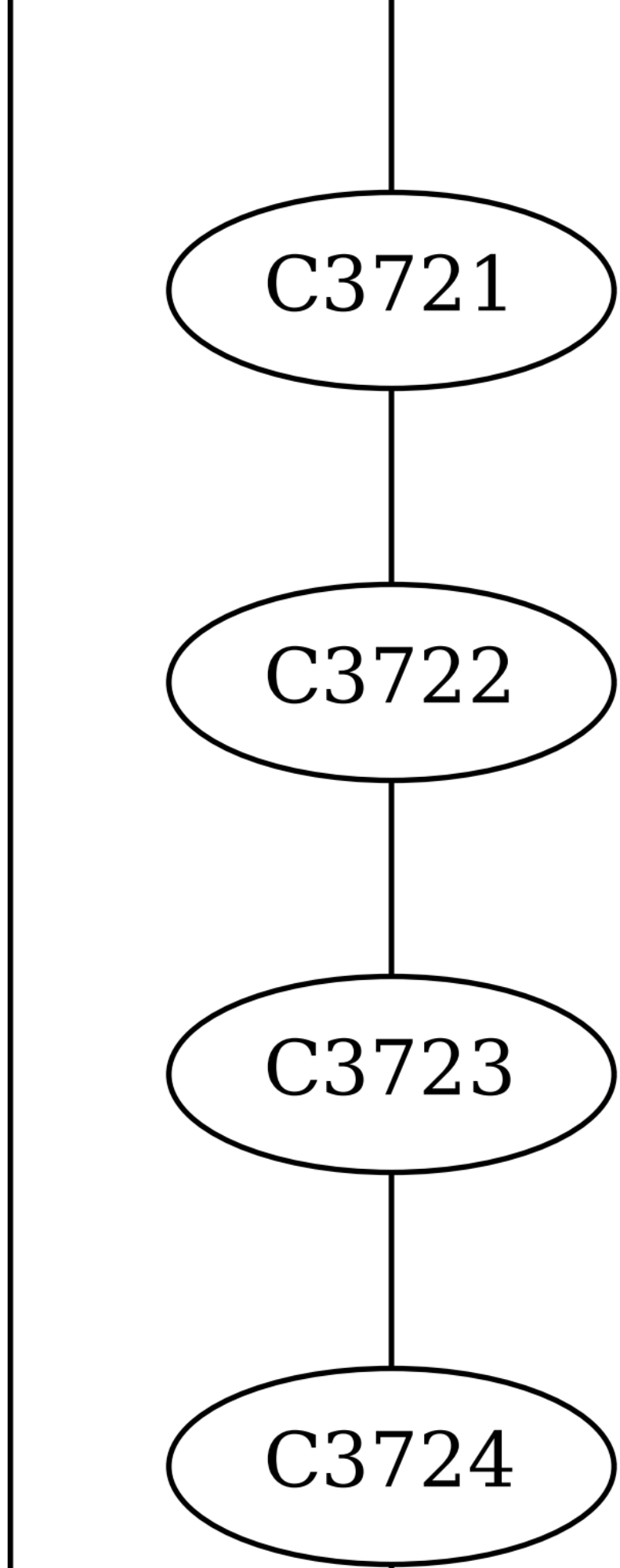
C3721
C3722
C3723
C3724

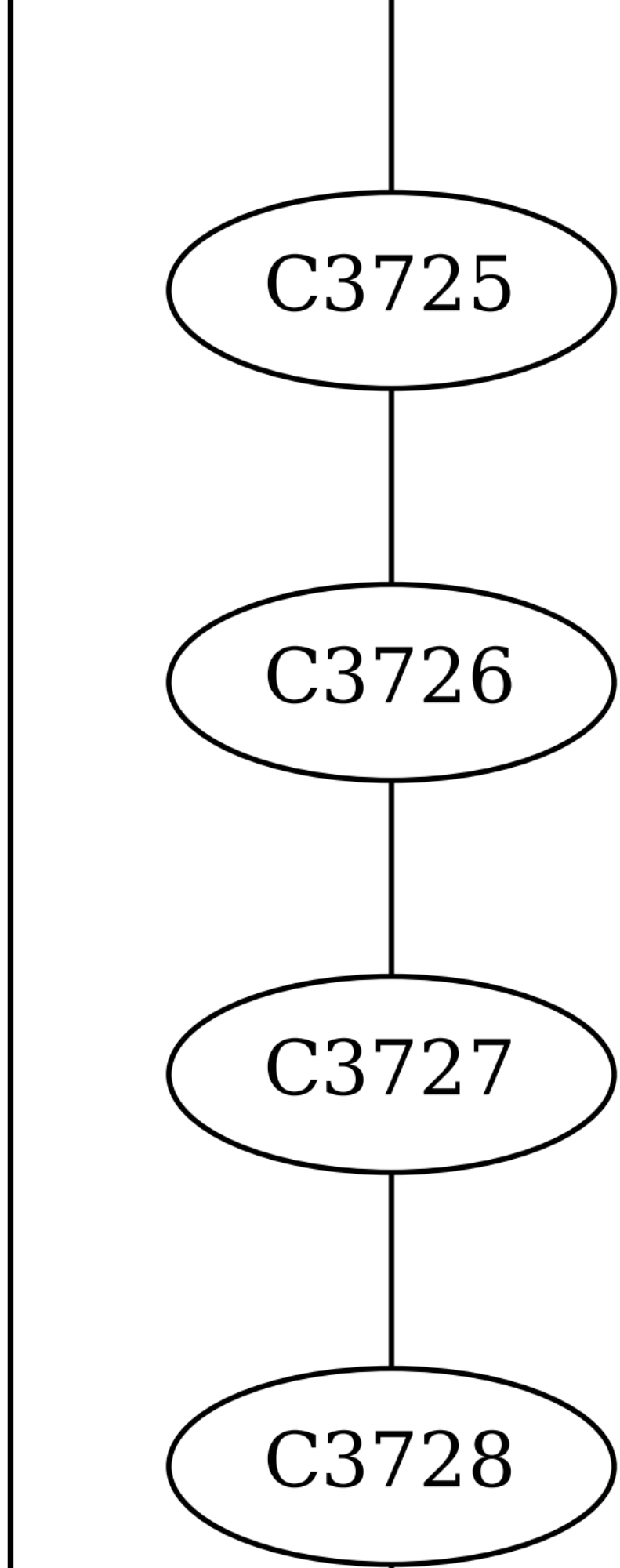
C3725
C3726
C3727
C3728

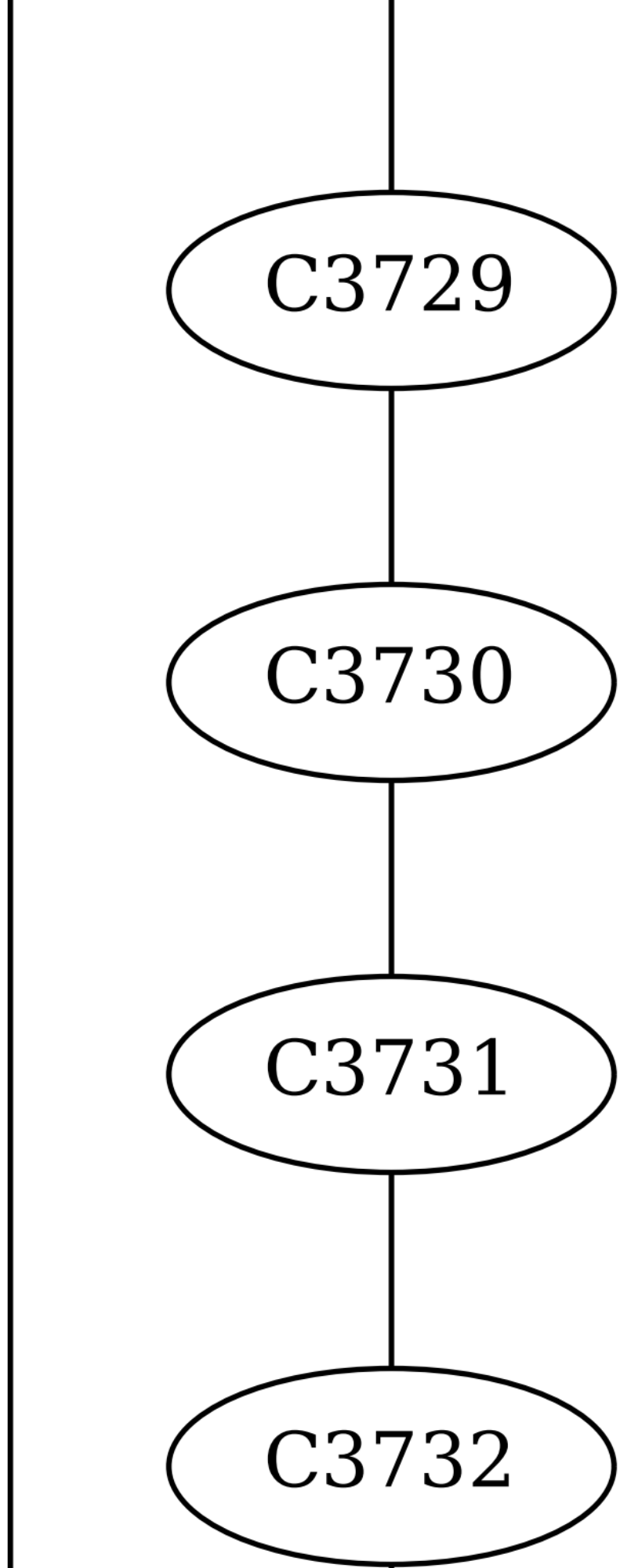
C3729
C3730
C3731
C3732

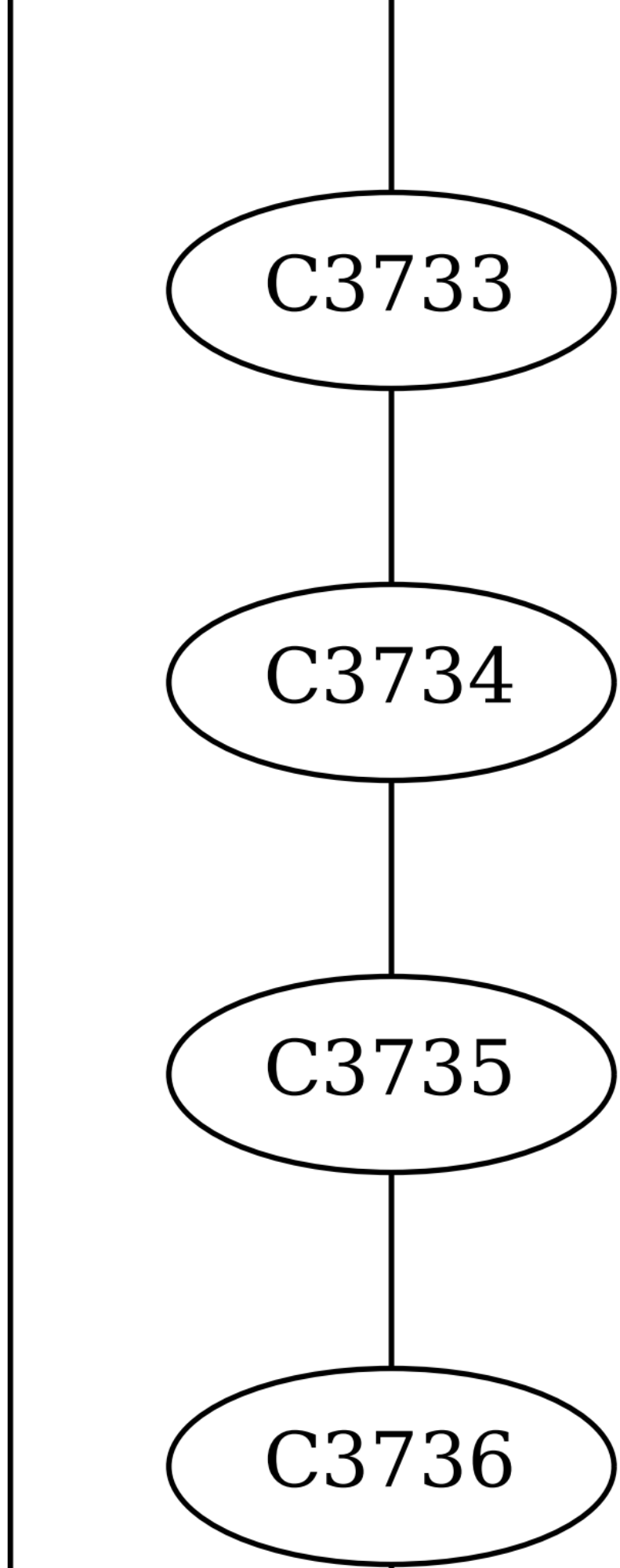
C3733
C3734
C3735
C3736

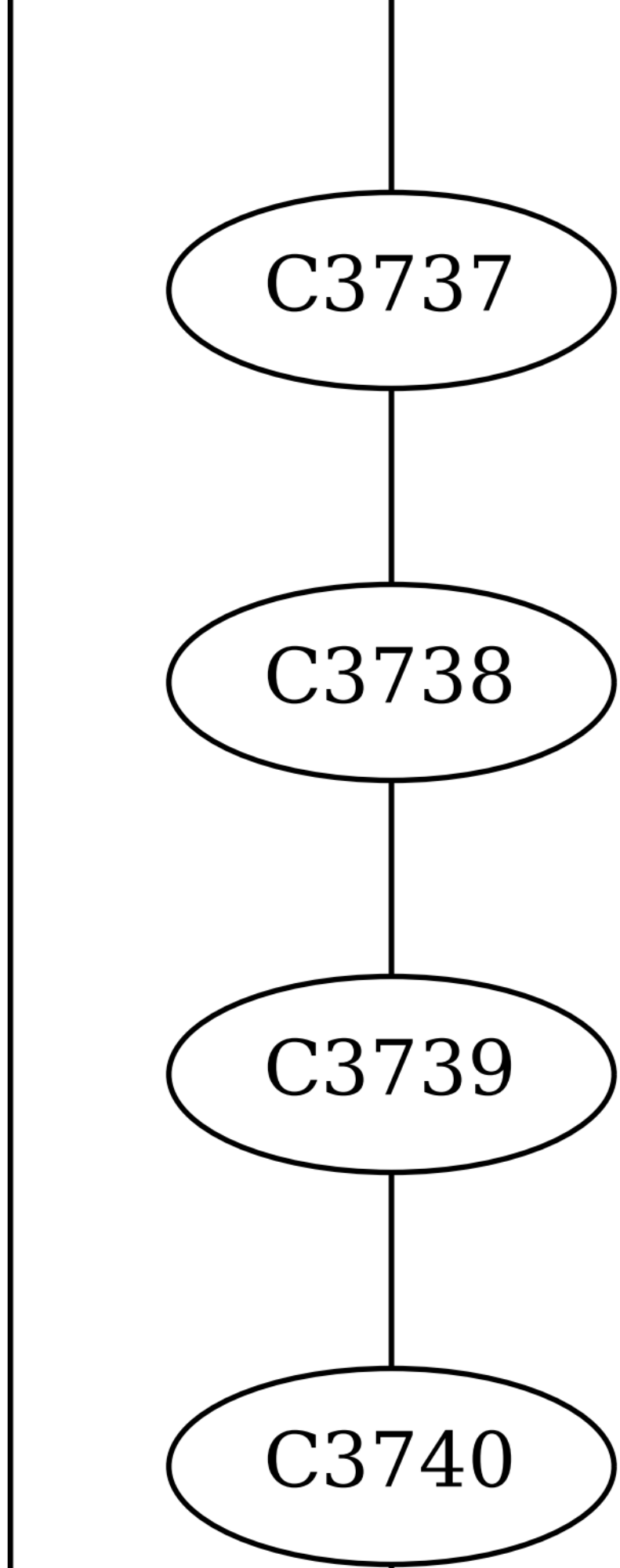
C3737
C3738
C3739
C3740

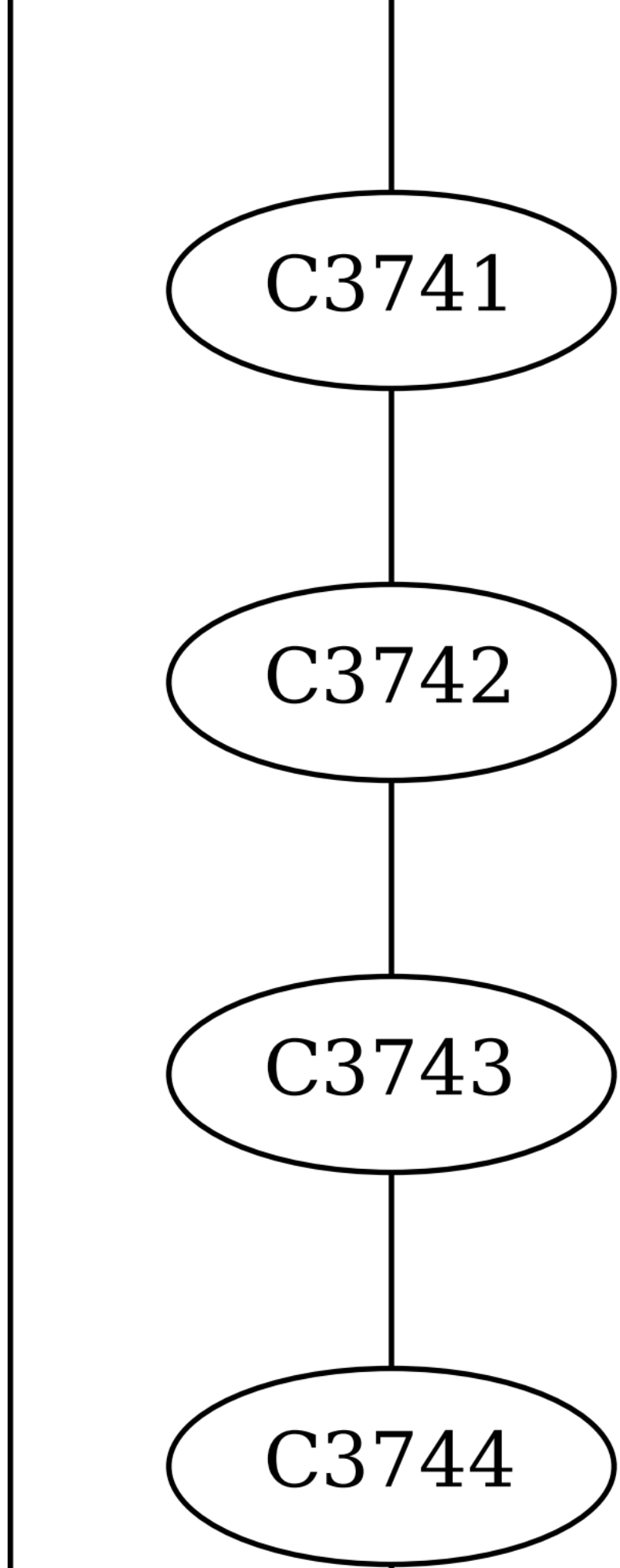
C3741
C3742
C3743
C3744

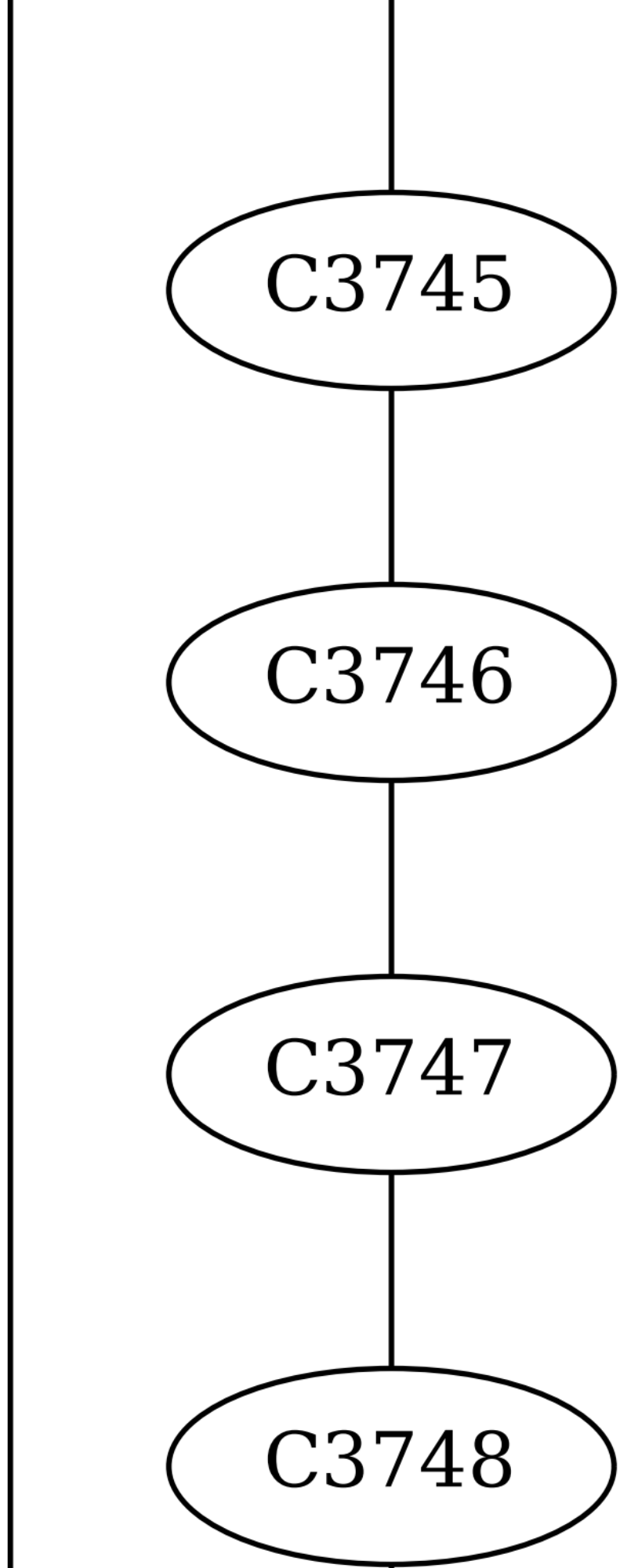
C3745
C3746
C3747
C3748

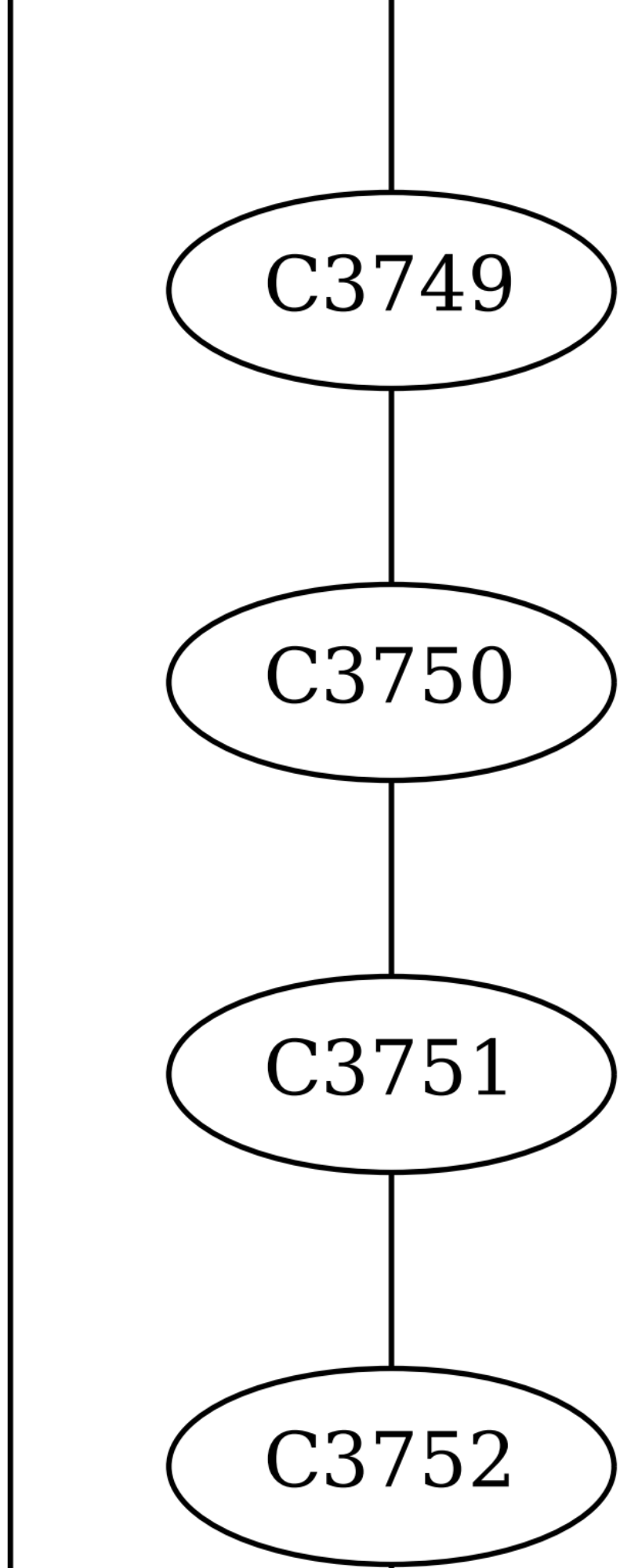
C3749
C3750
C3751
C3752

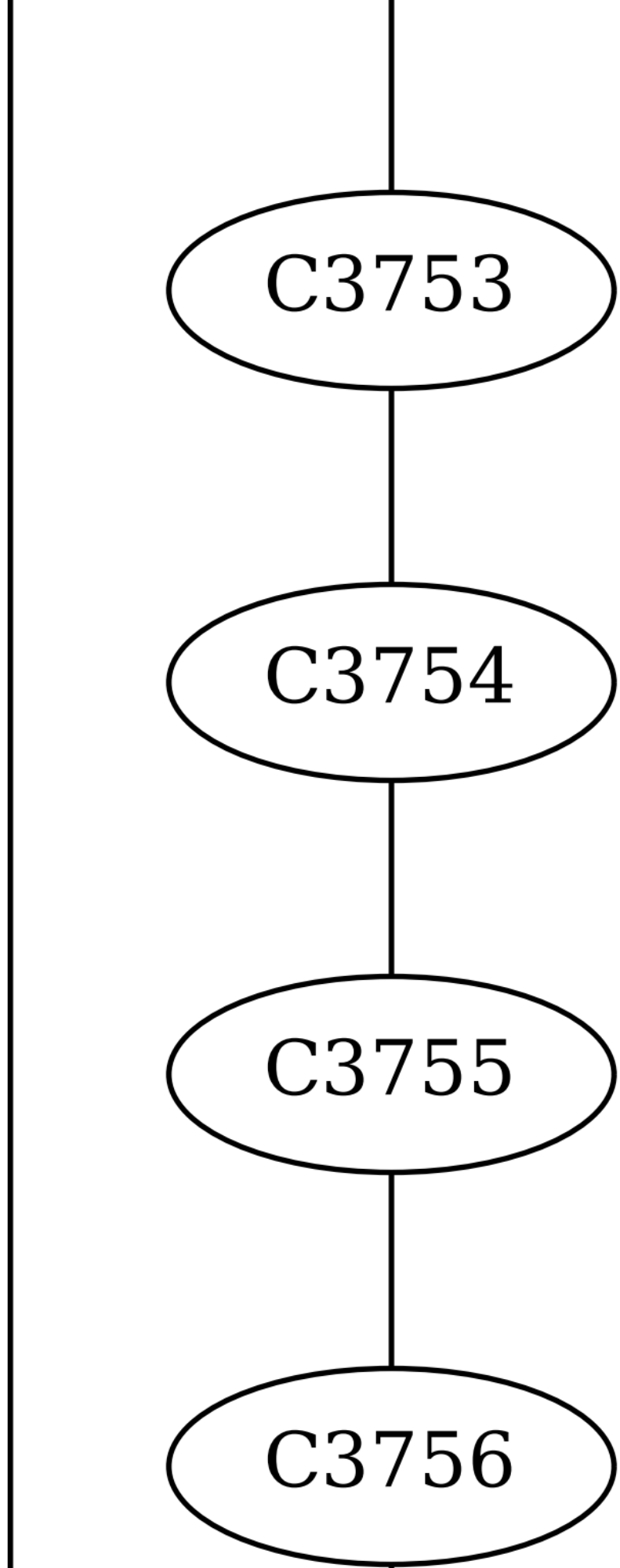
C3753
C3754
C3755
C3756

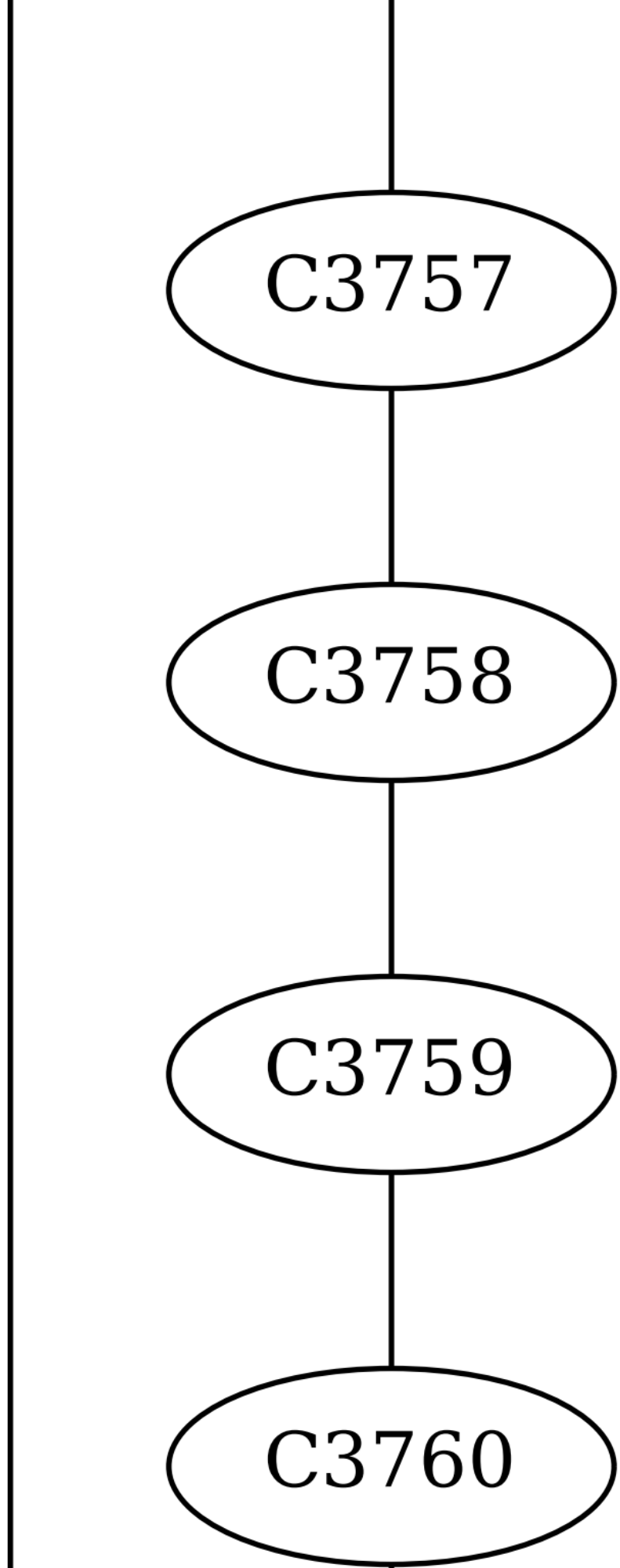
C3757
C3758
C3759
C3760

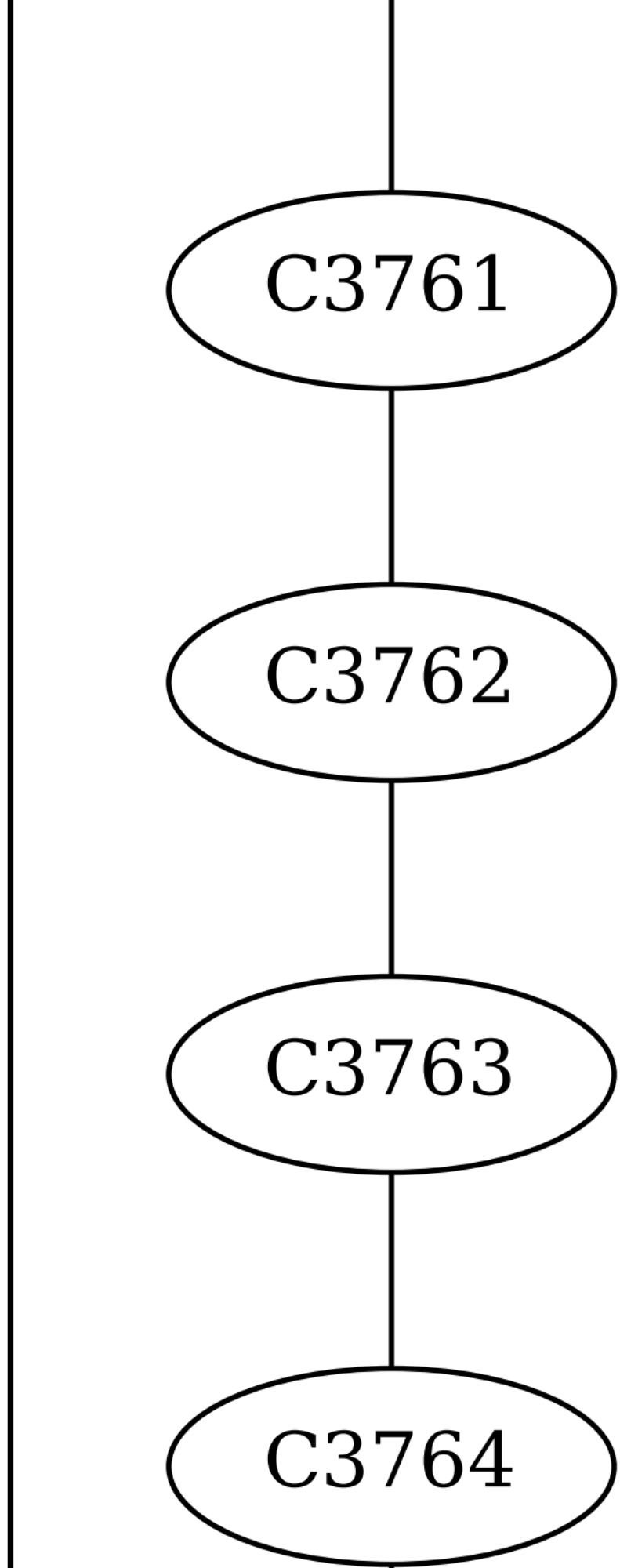
C3761
C3762
C3763
C3764

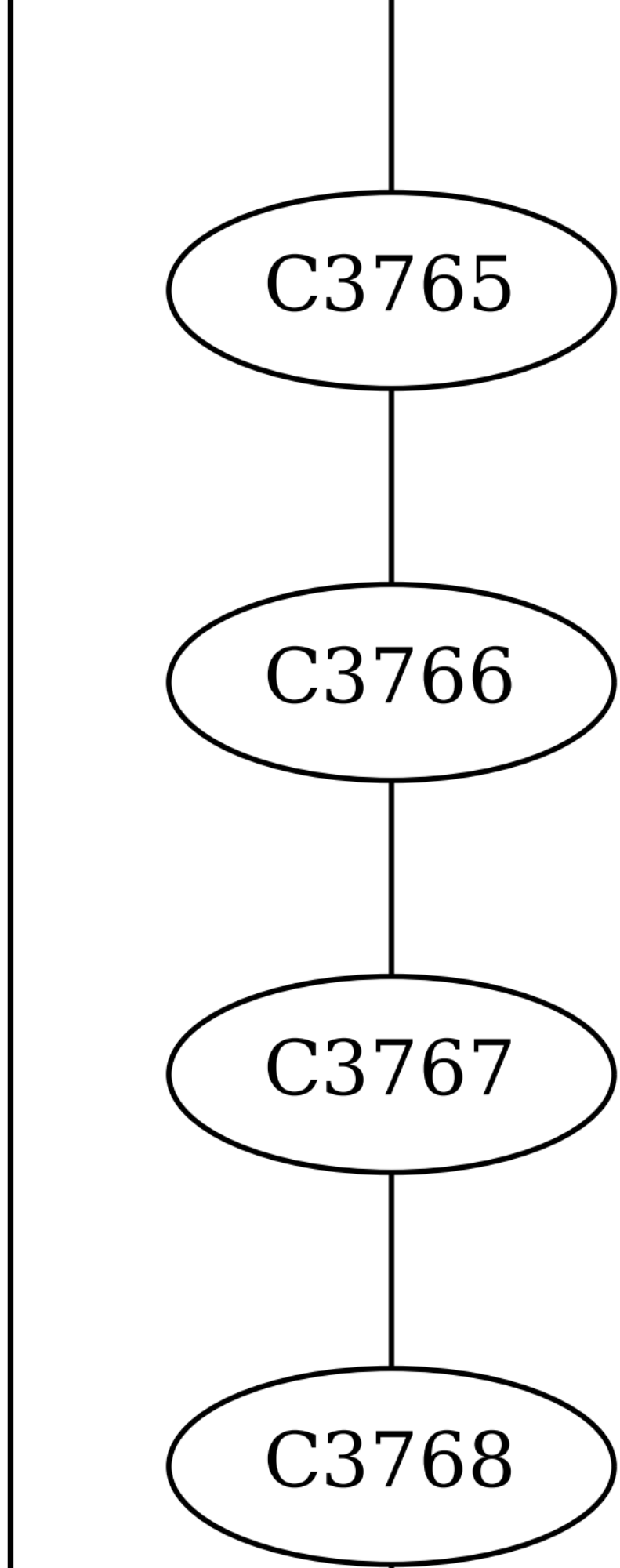
C3765
C3766
C3767
C3768

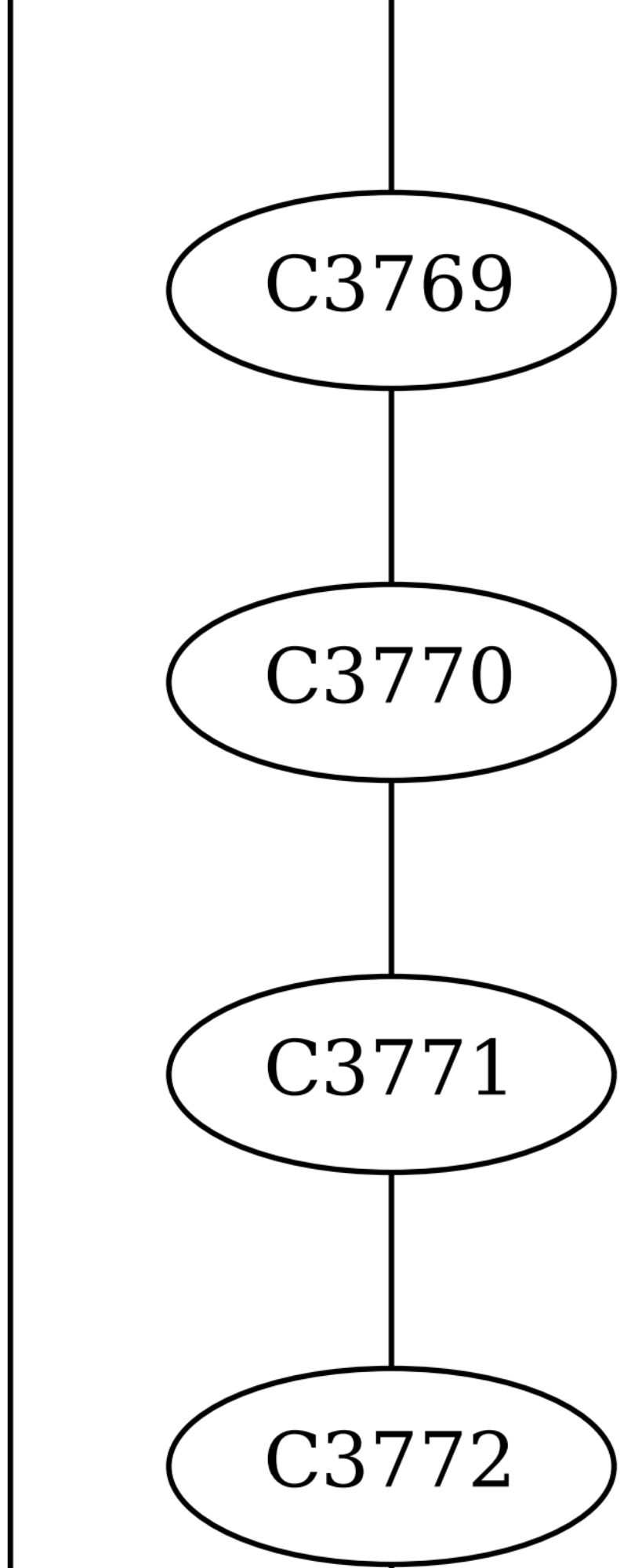
C3769
C3770
C3771
C3772

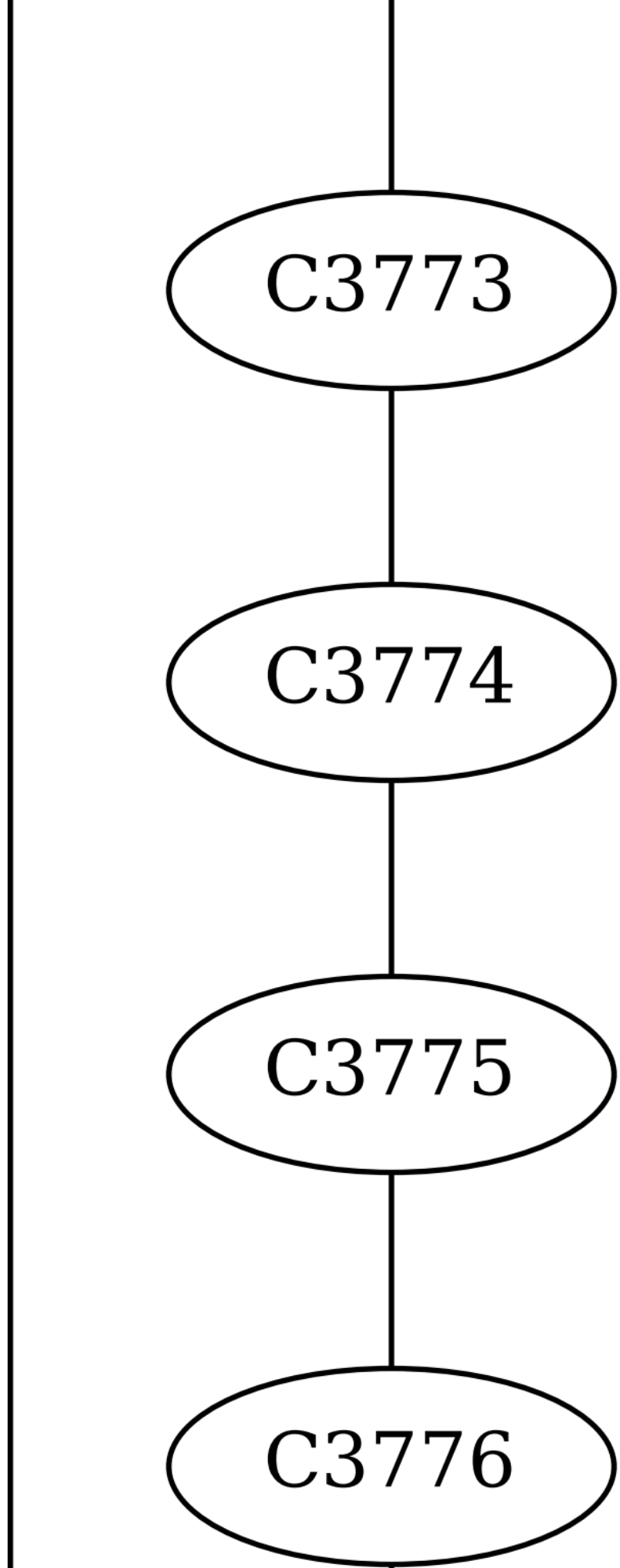
C3773
C3774
C3775
C3776

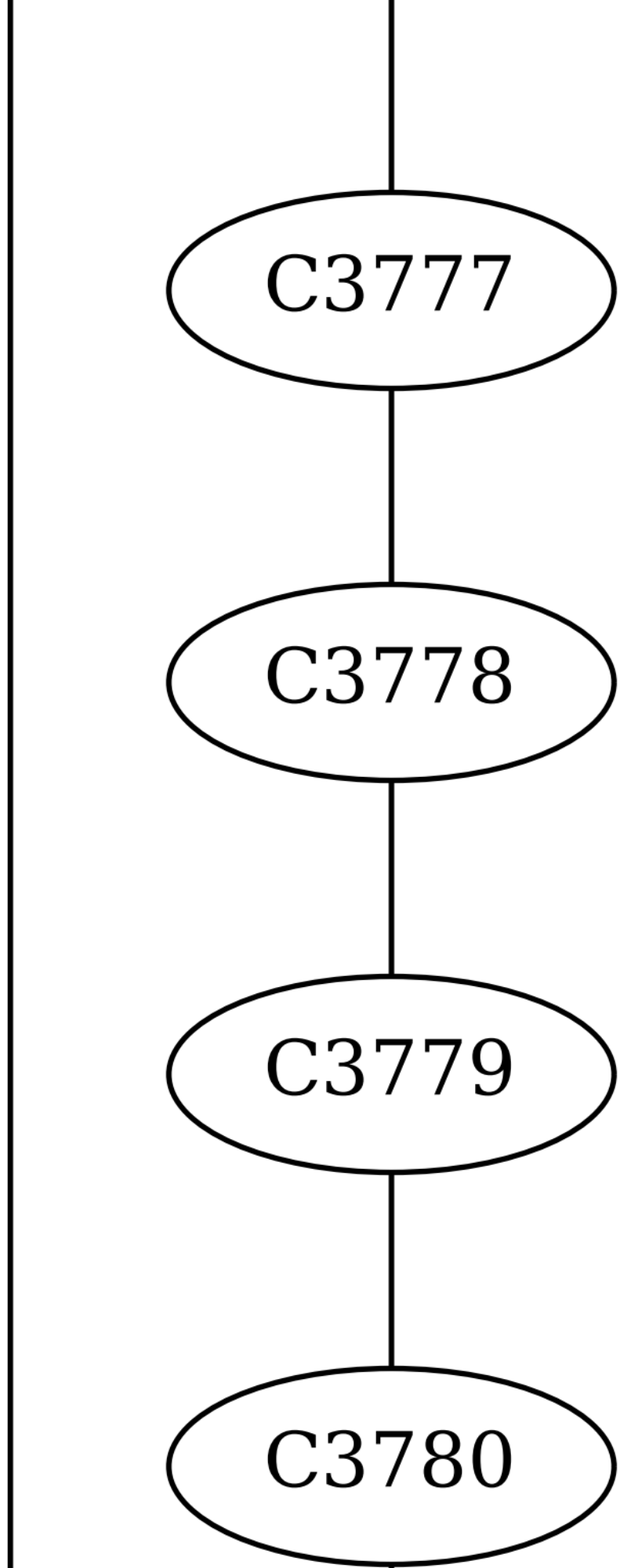
C3777
C3778
C3779
C3780

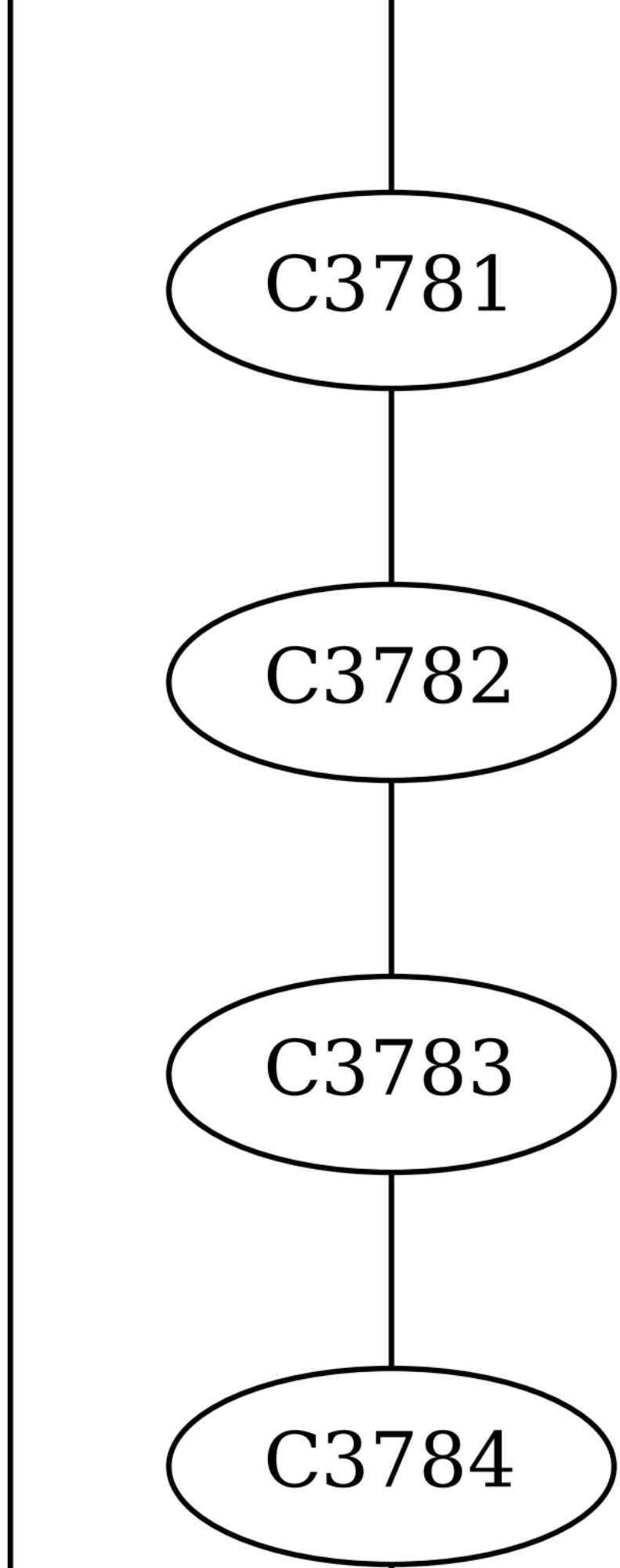
C3781
C3782
C3783
C3784

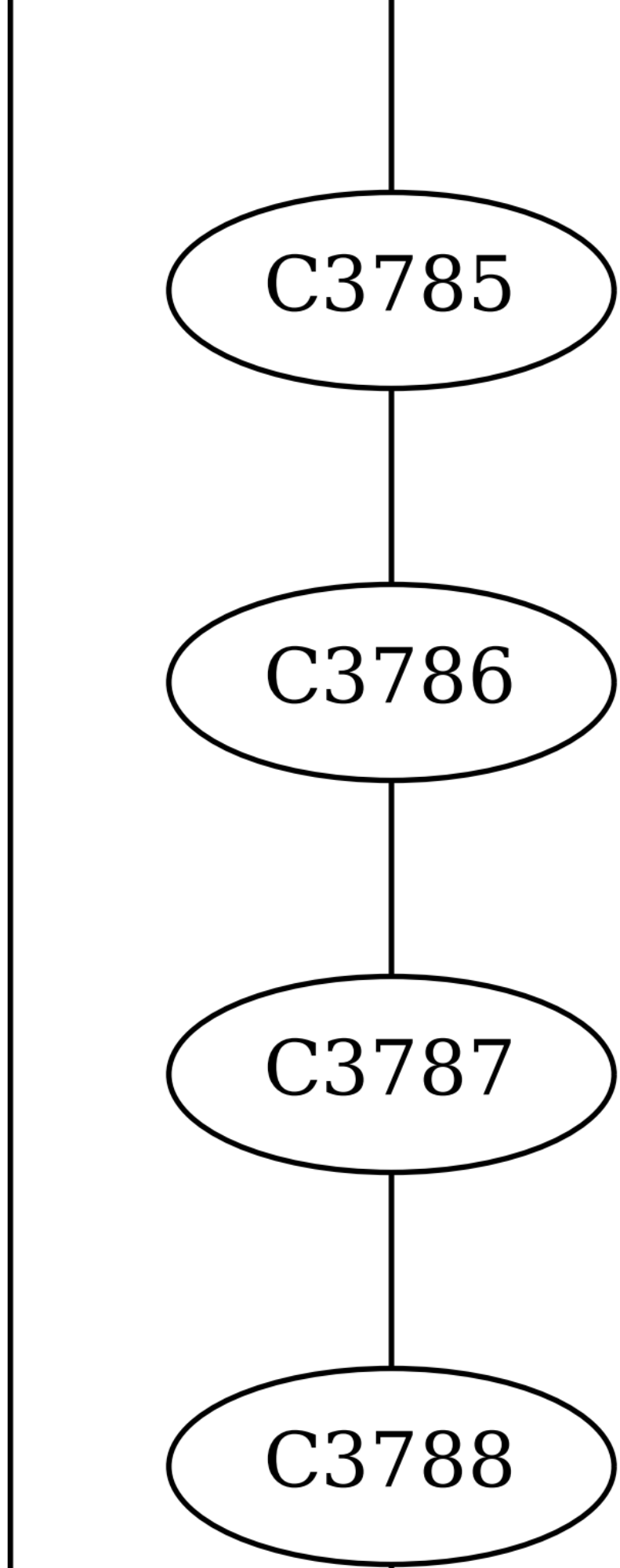
C3785
C3786
C3787
C3788

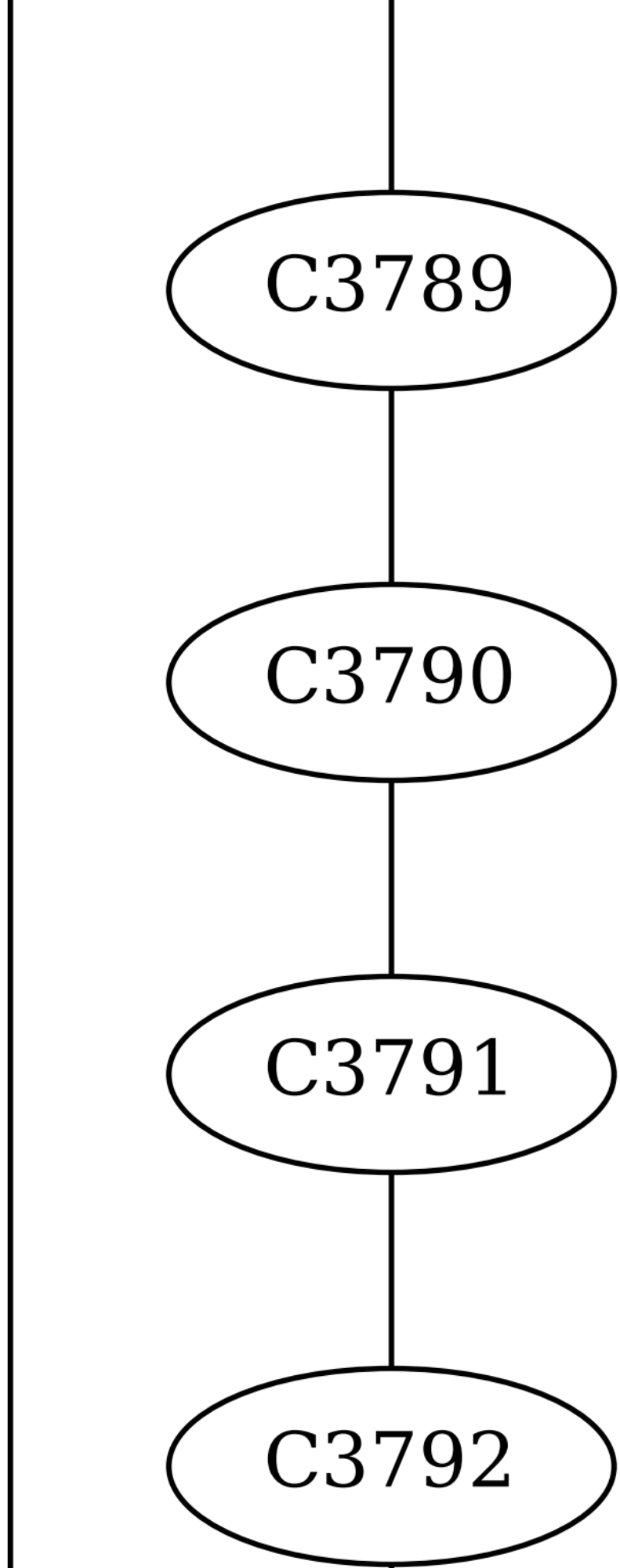
C3789
C3790
C3791
C3792

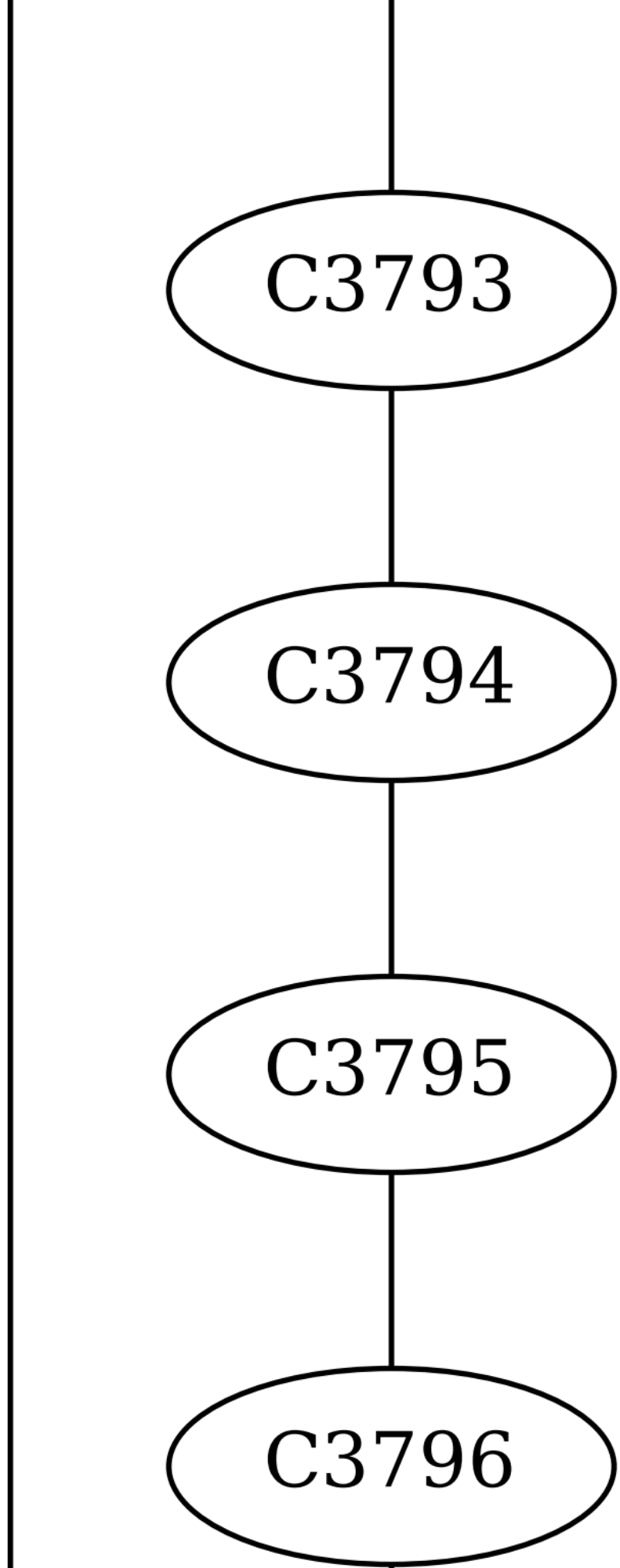
C3793
C3794
C3795
C3796

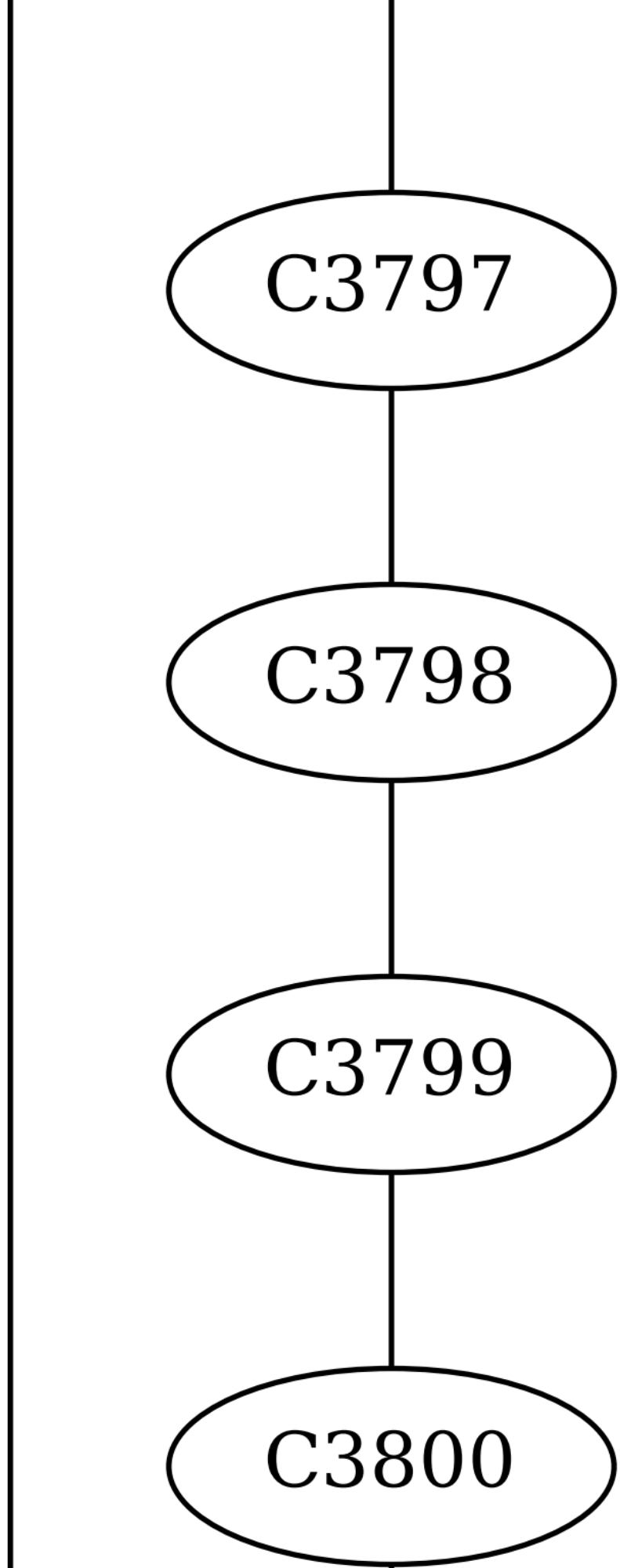
C3797
C3798
C3799
C3800

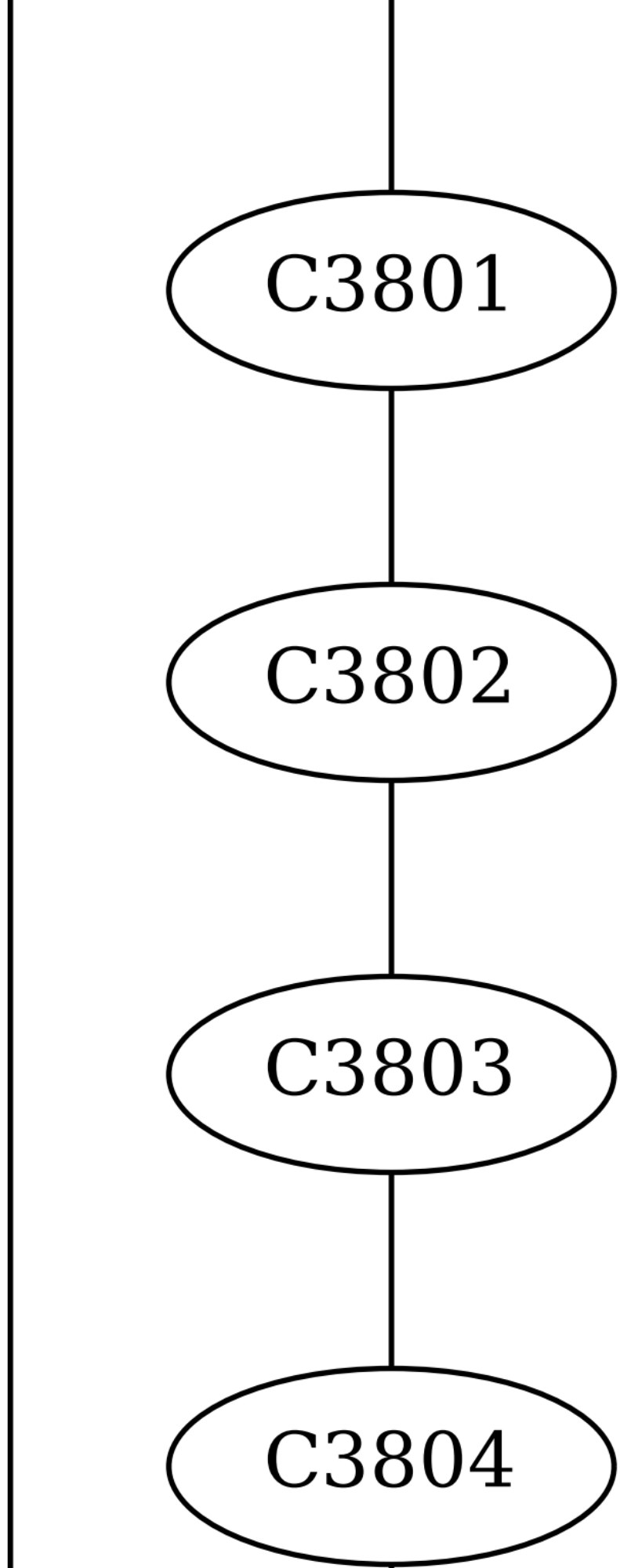
C3801
C3802
C3803
C3804

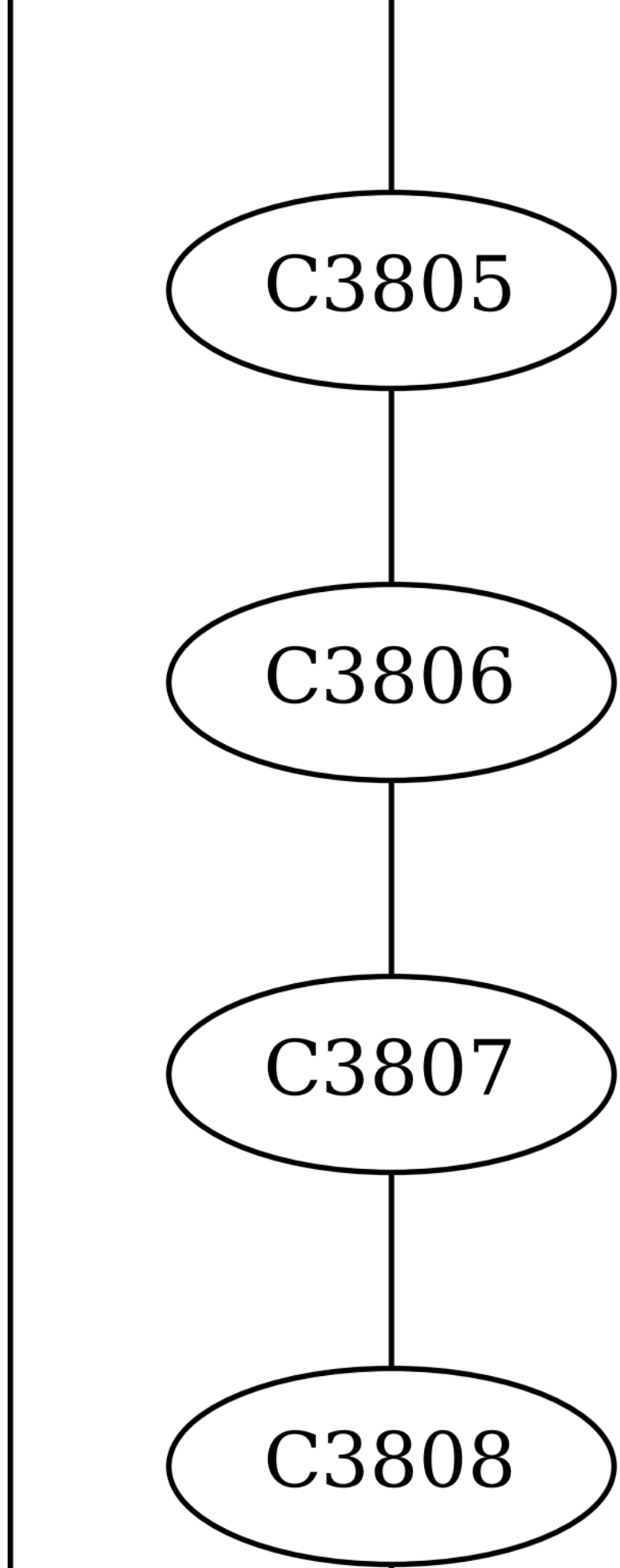
C3805
C3806
C3807
C3808

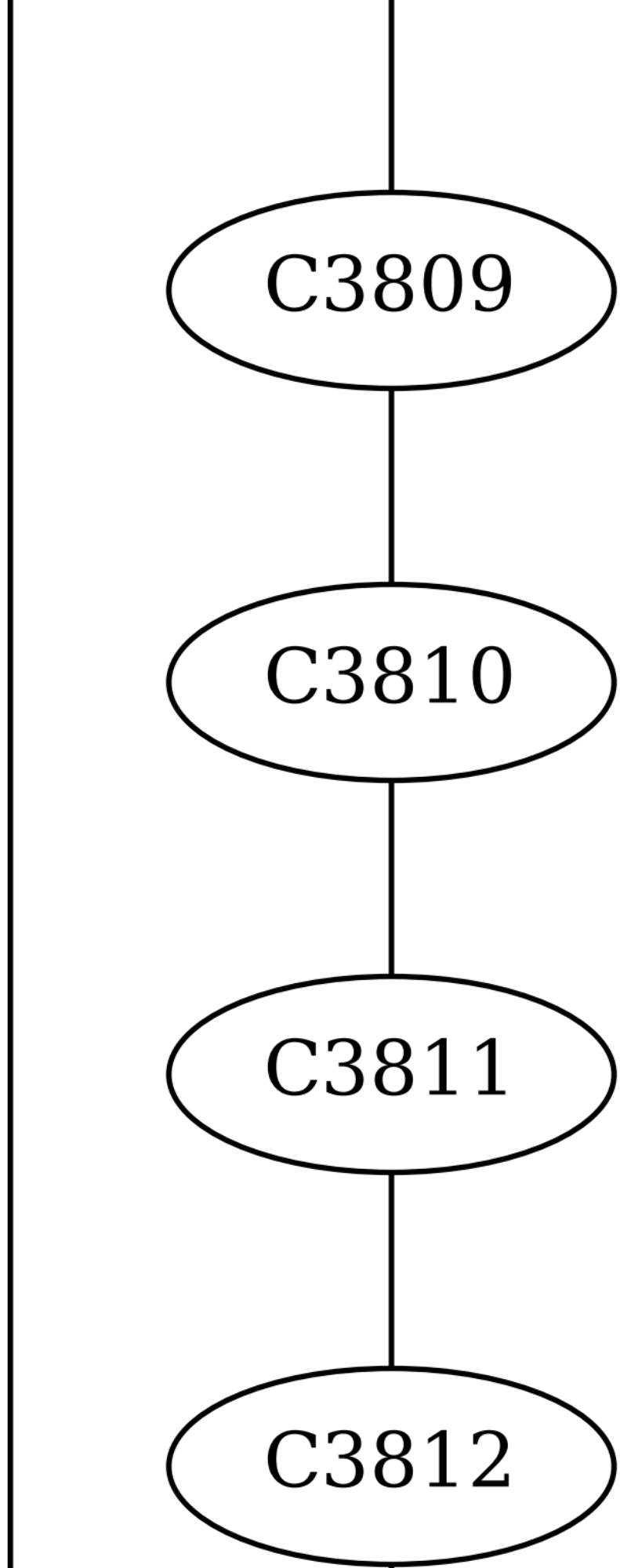
C3809
C3810
C3811
C3812

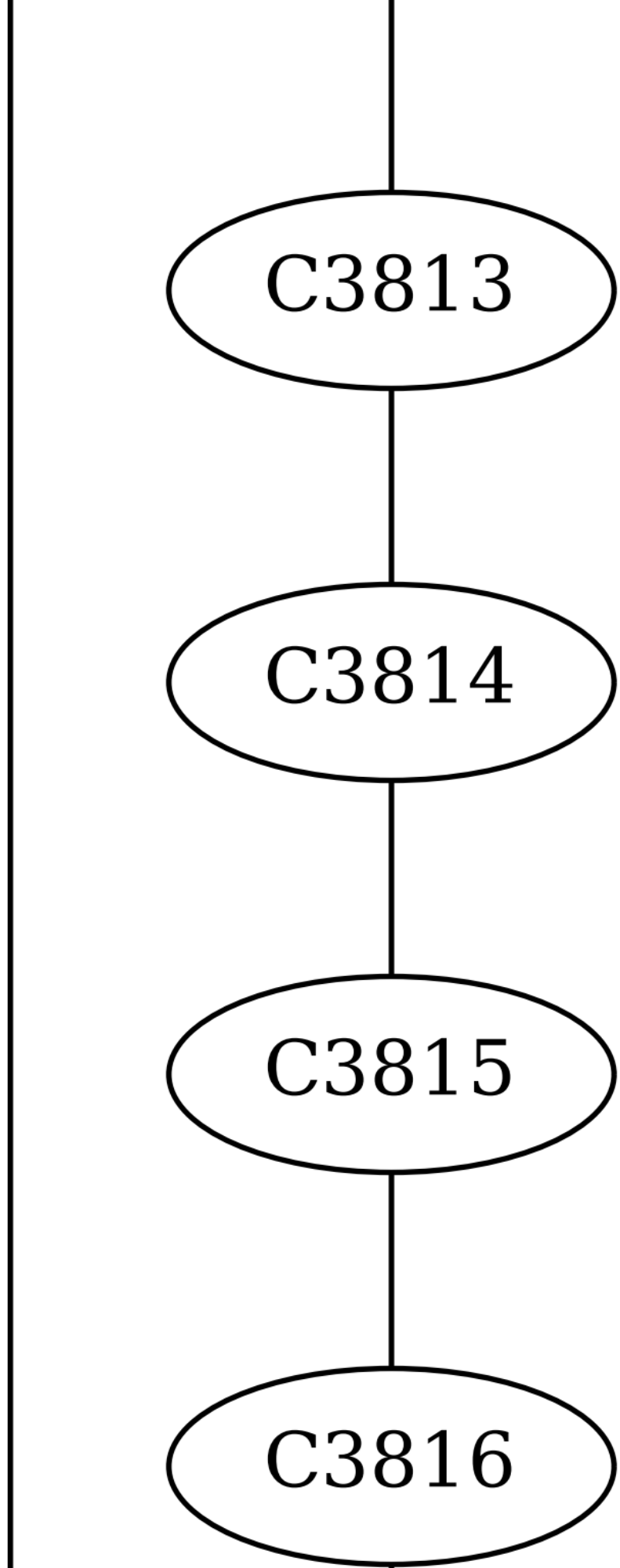
C3813
C3814
C3815
C3816

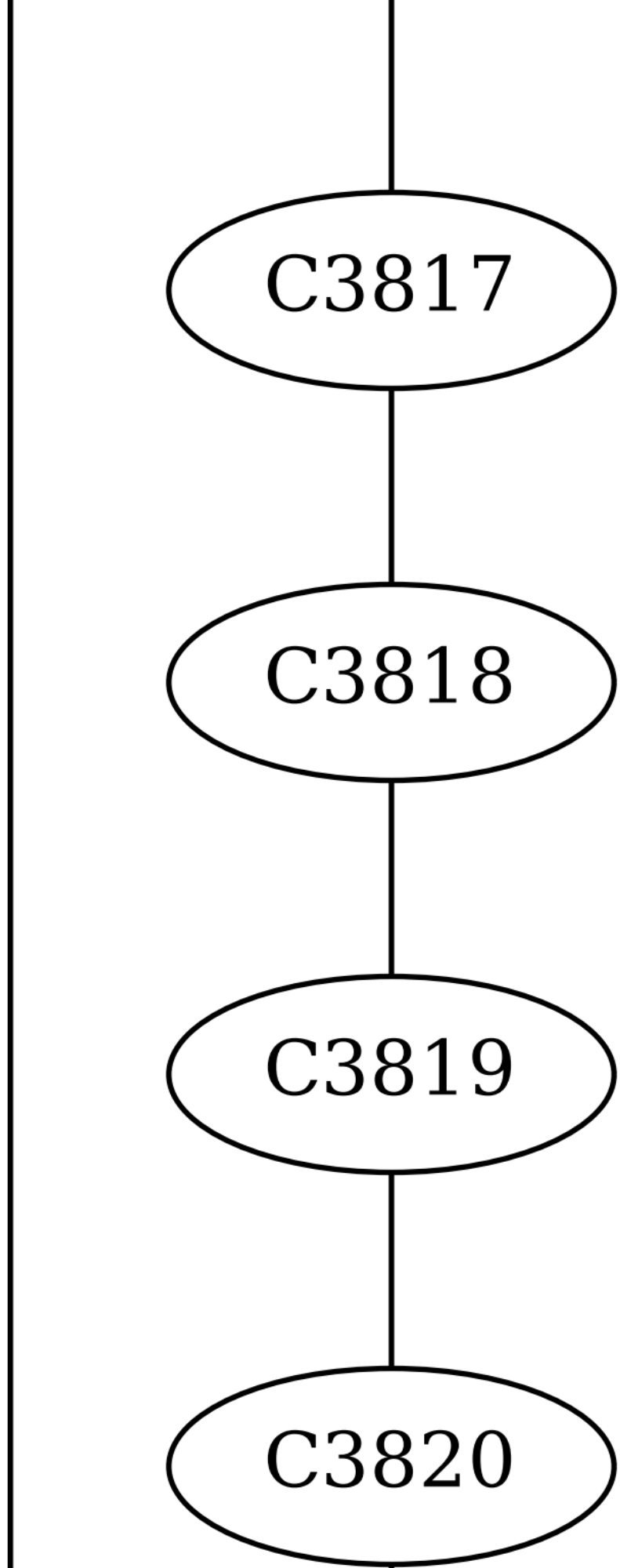
C3817
C3818
C3819
C3820

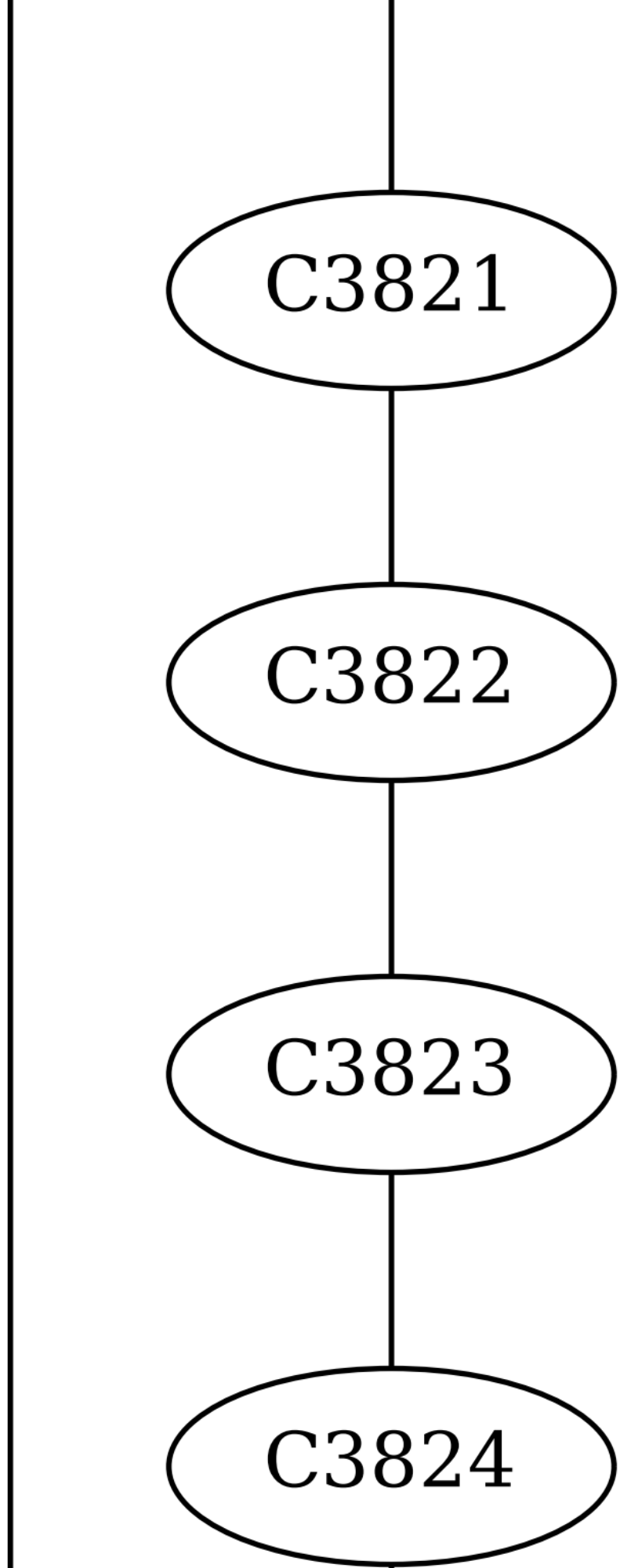
C3821
C3822
C3823
C3824

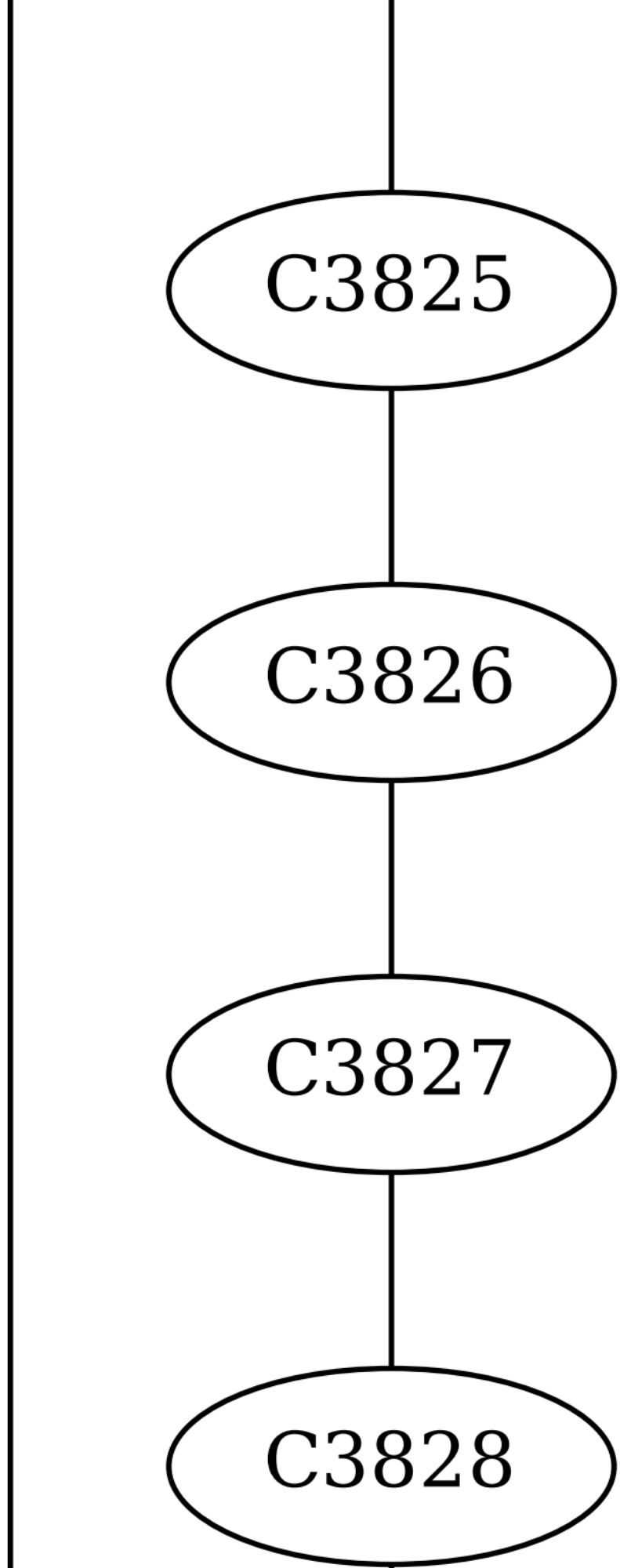
C3825
C3826
C3827
C3828

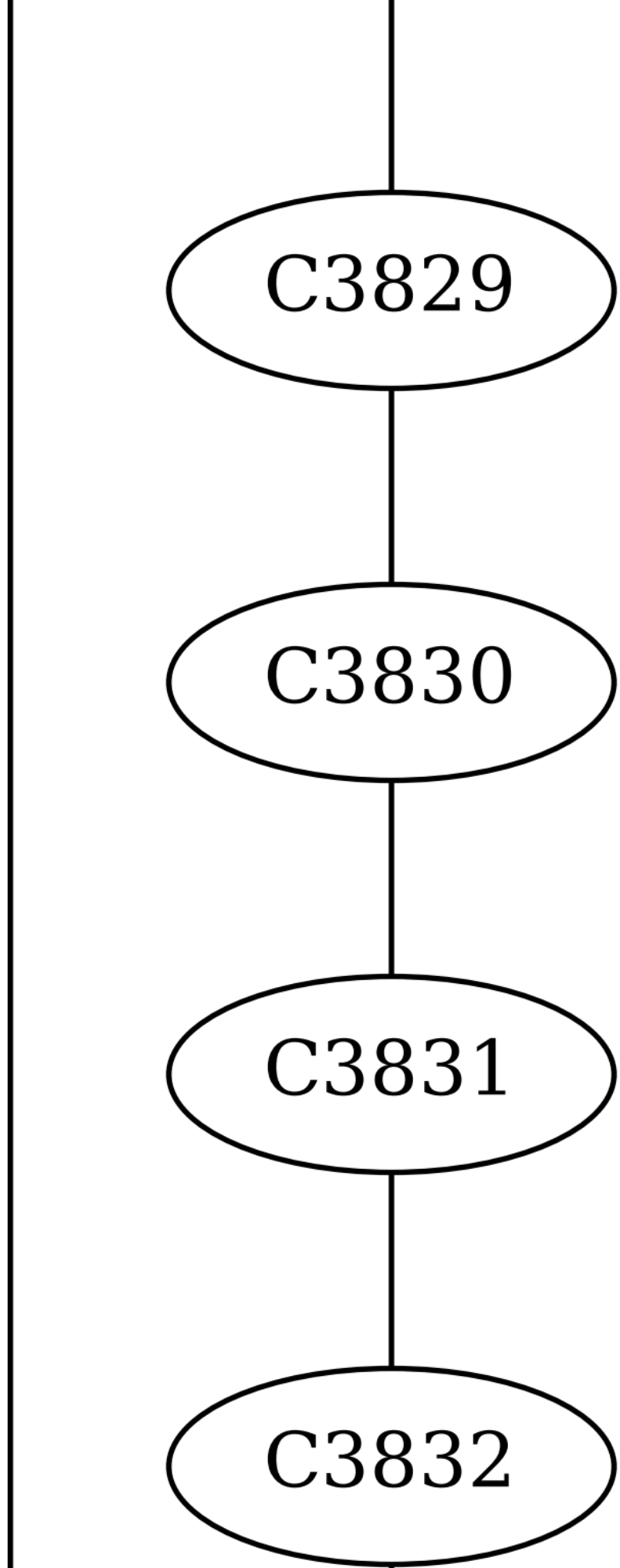
C3829
C3830
C3831
C3832

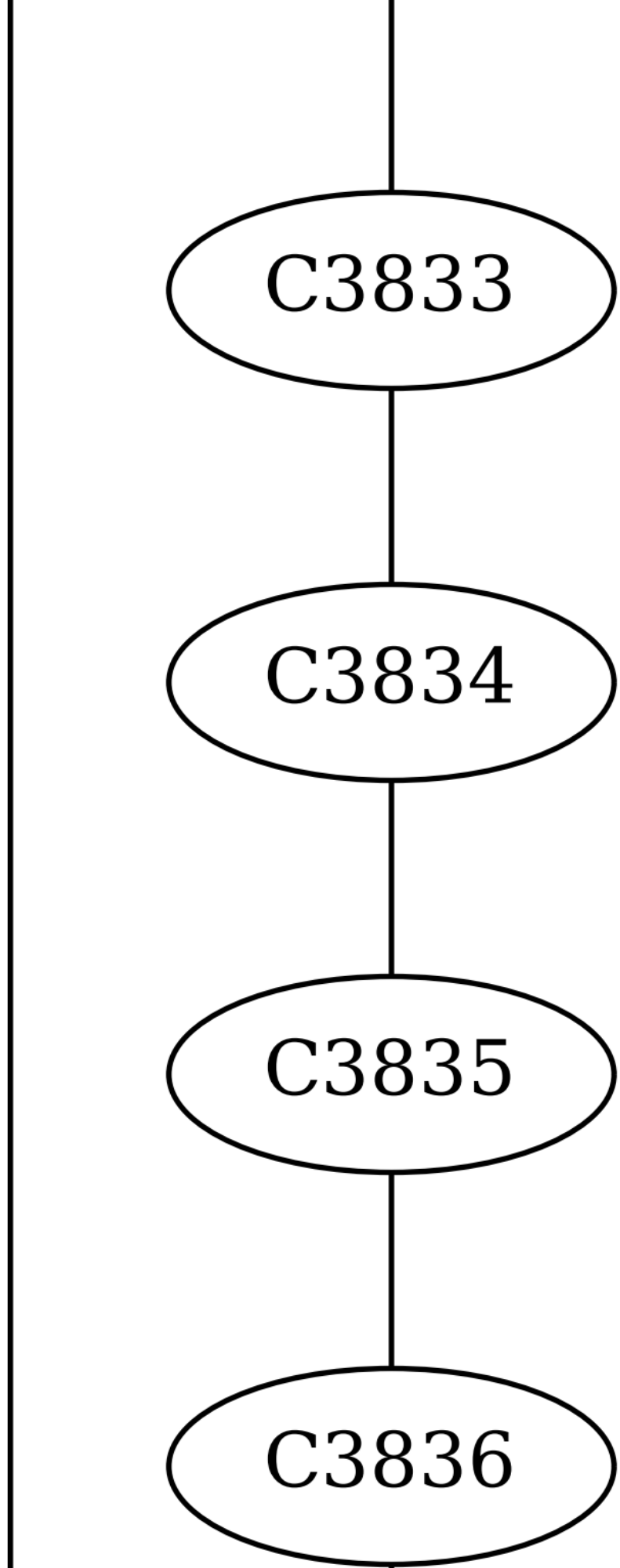
C3833
C3834
C3835
C3836

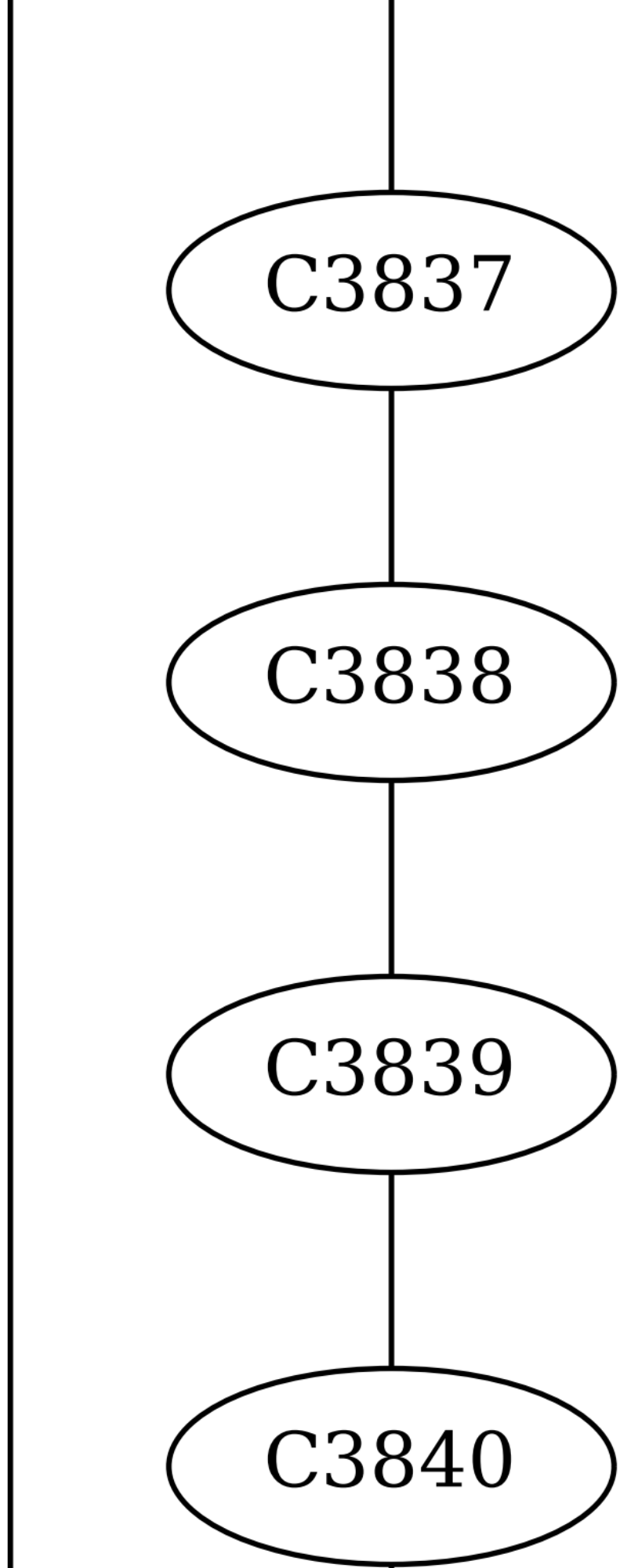
C3837
C3838
C3839
C3840

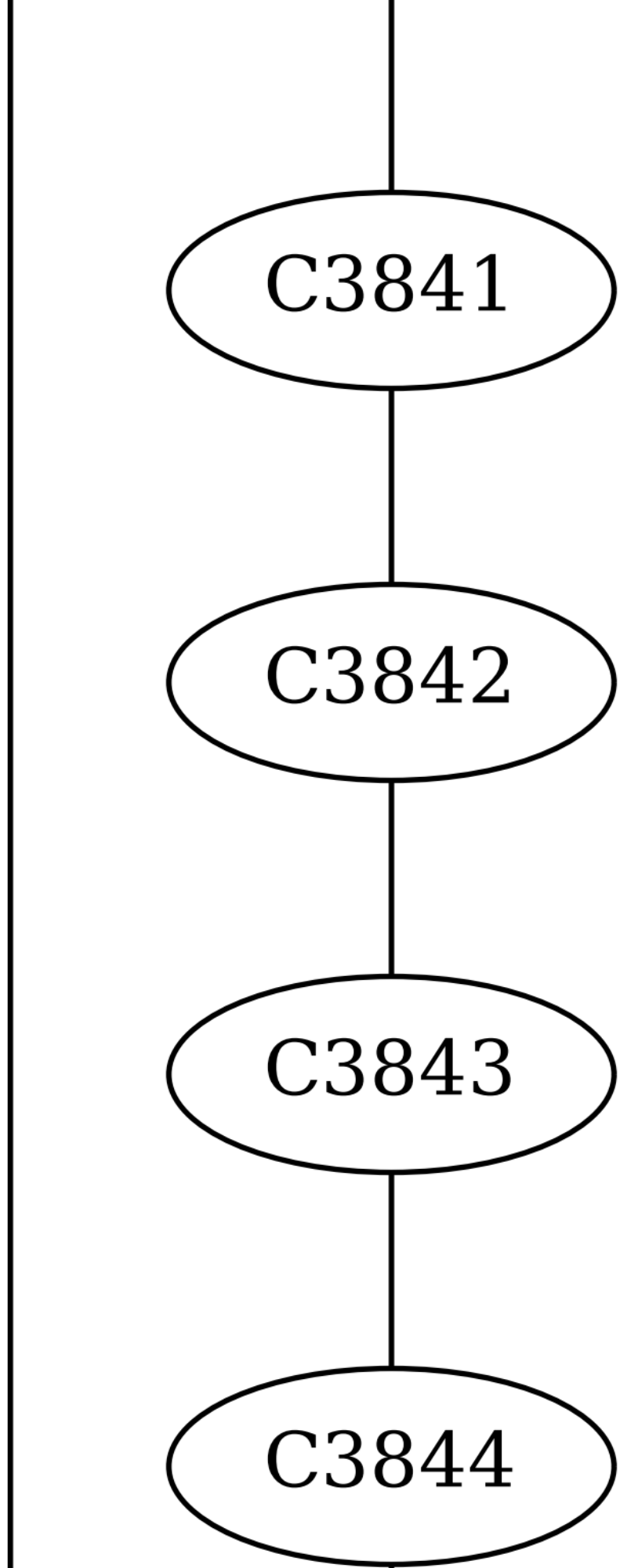
C3841
C3842
C3843
C3844

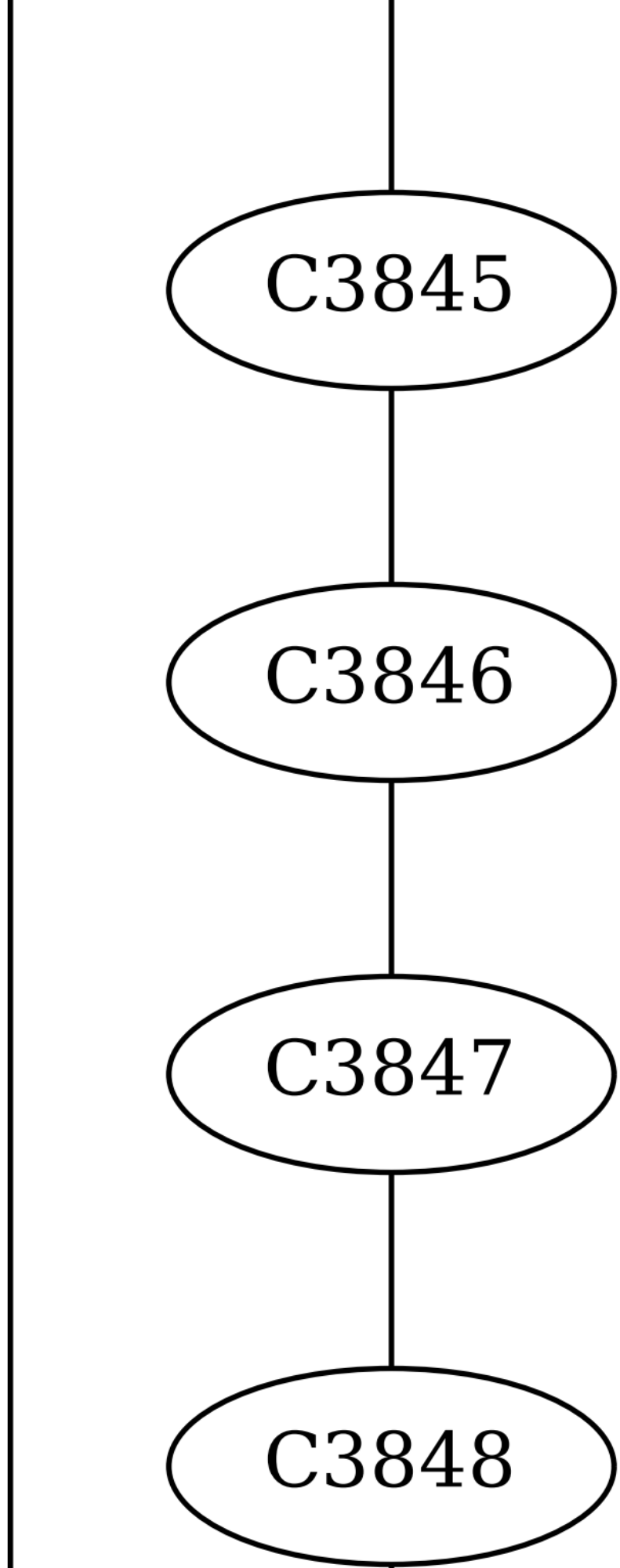
C3845
C3846
C3847
C3848

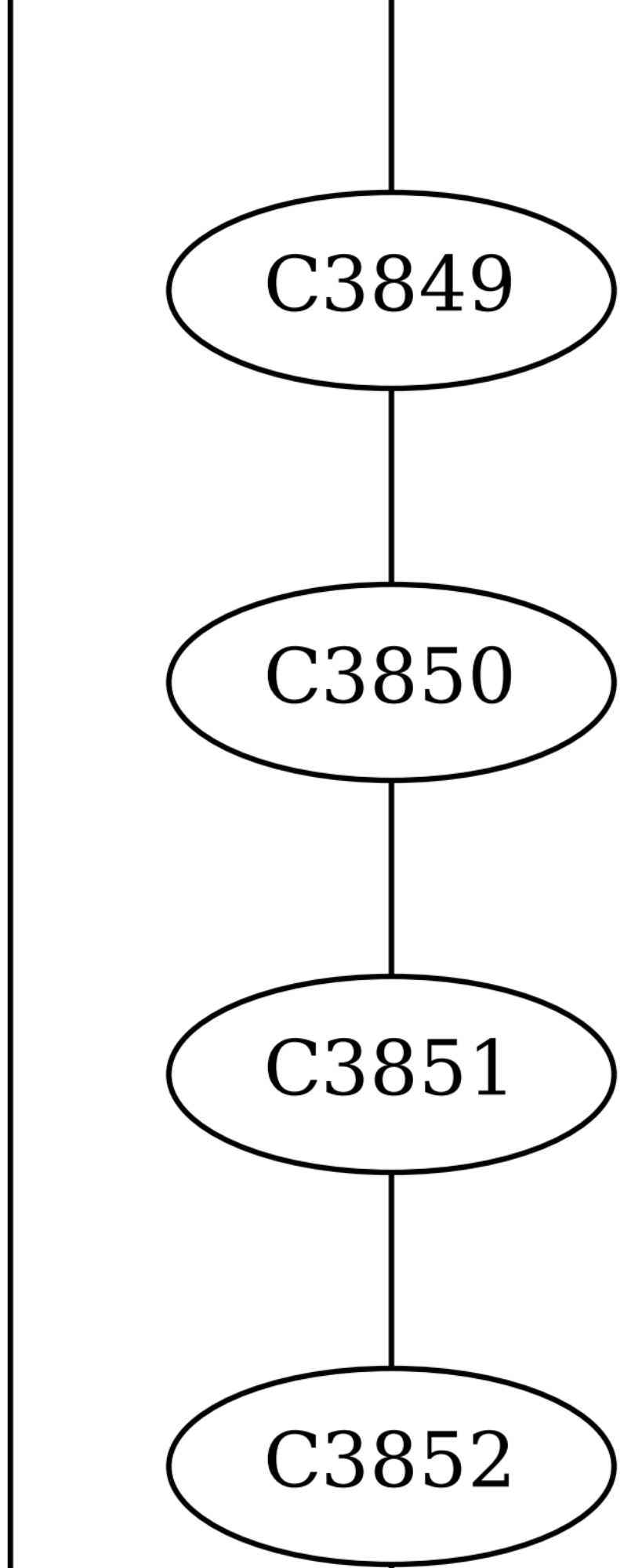
C3849
C3850
C3851
C3852

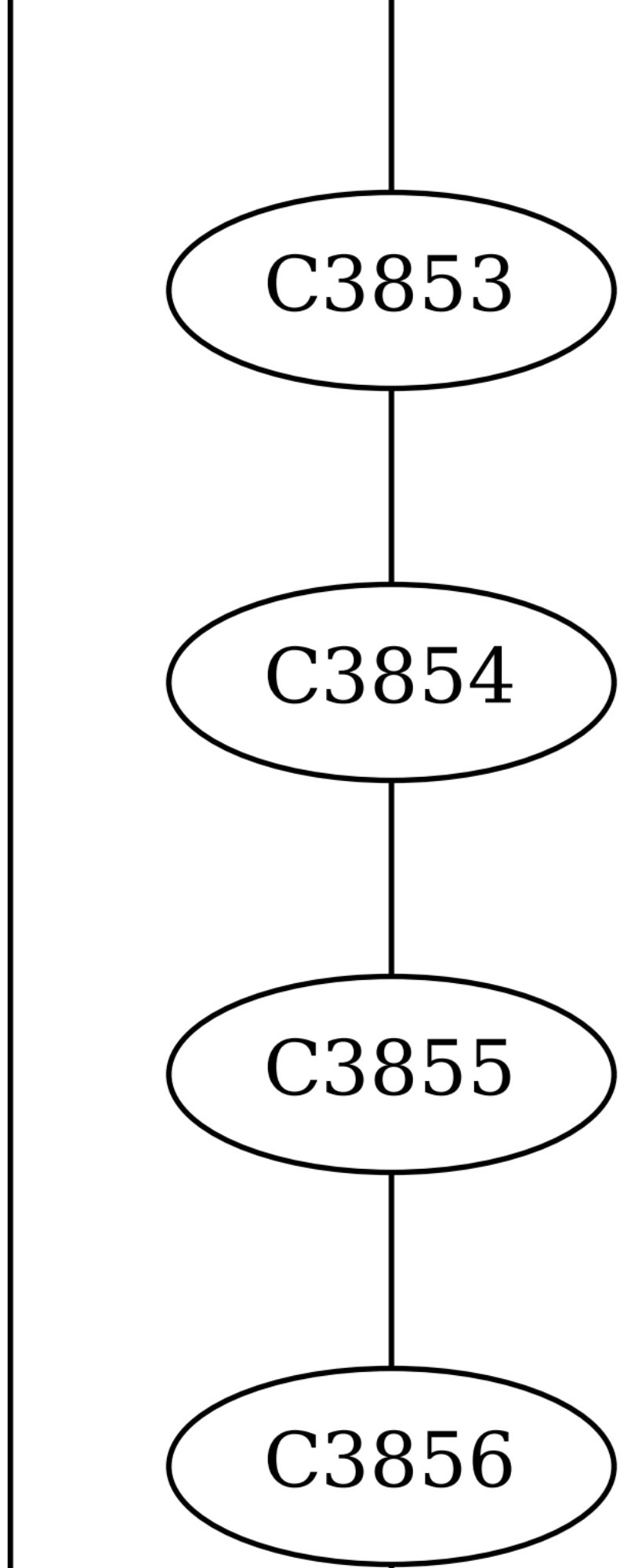
C3853
C3854
C3855
C3856

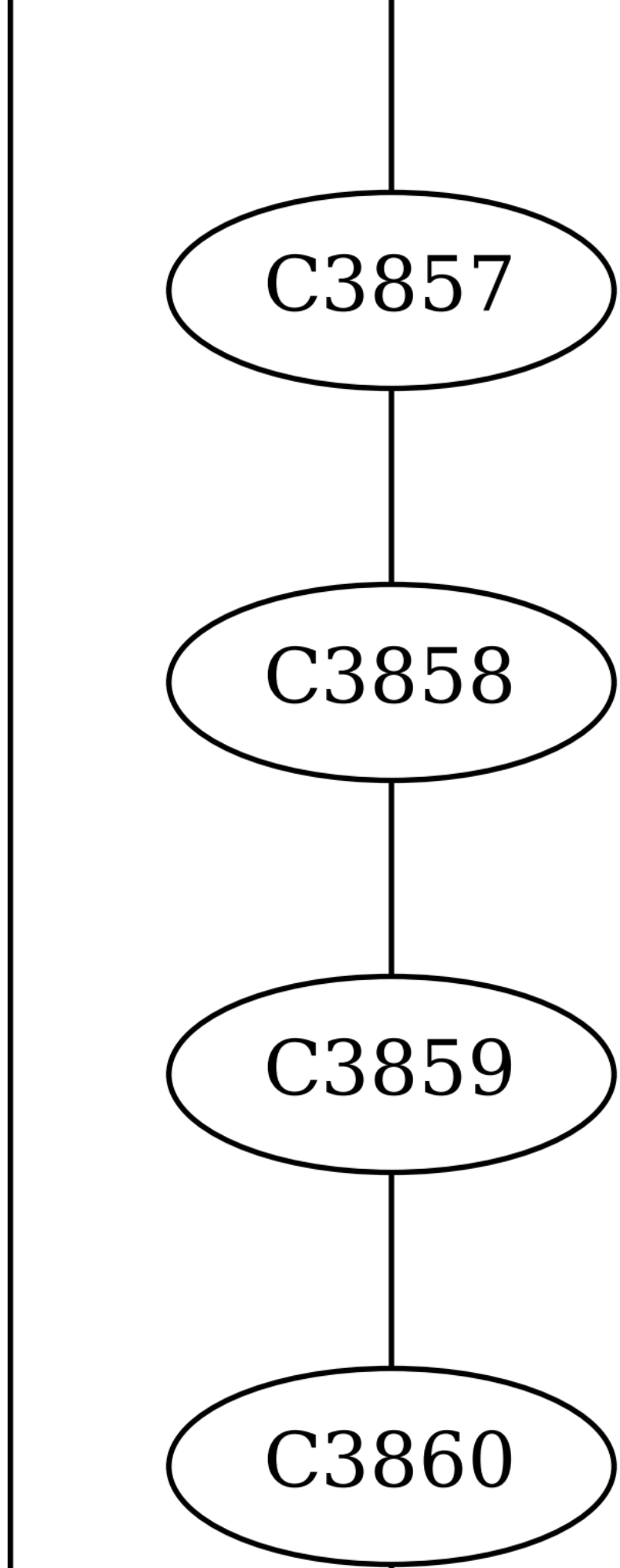
C3857
C3858
C3859
C3860

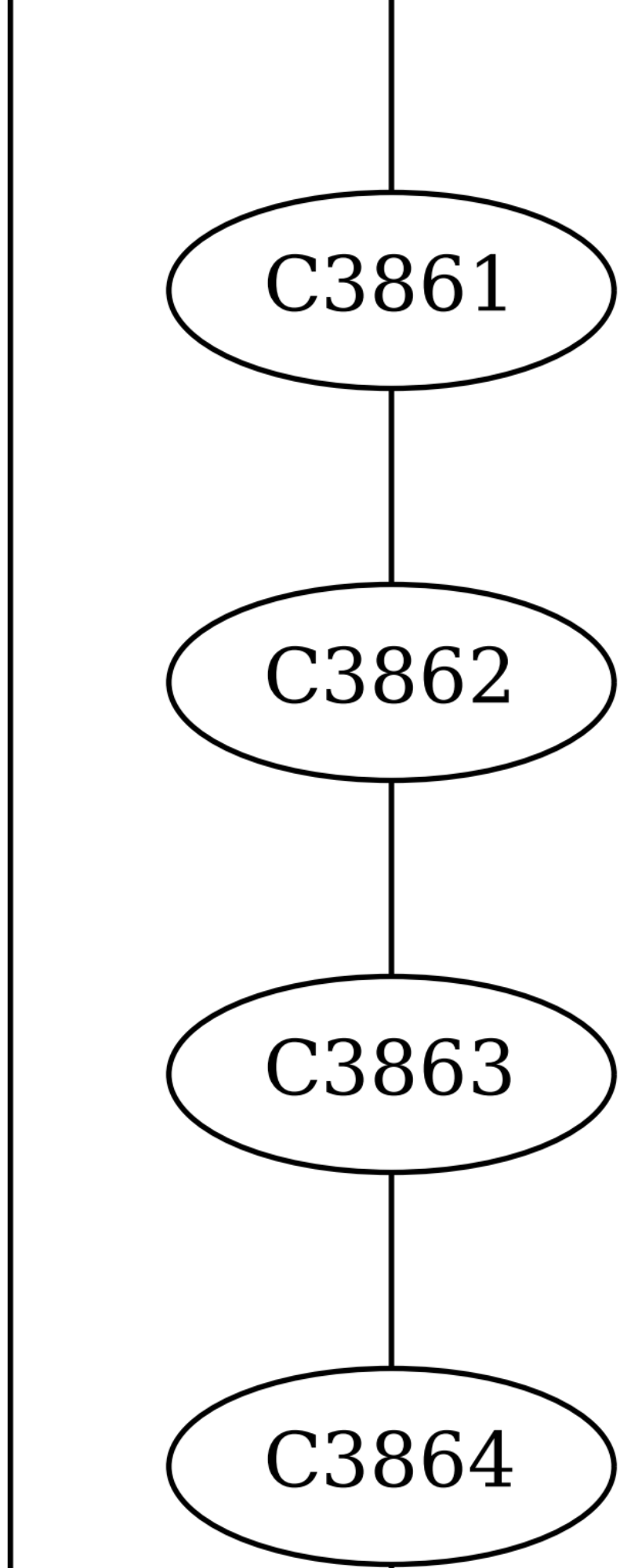
C3861
C3862
C3863
C3864

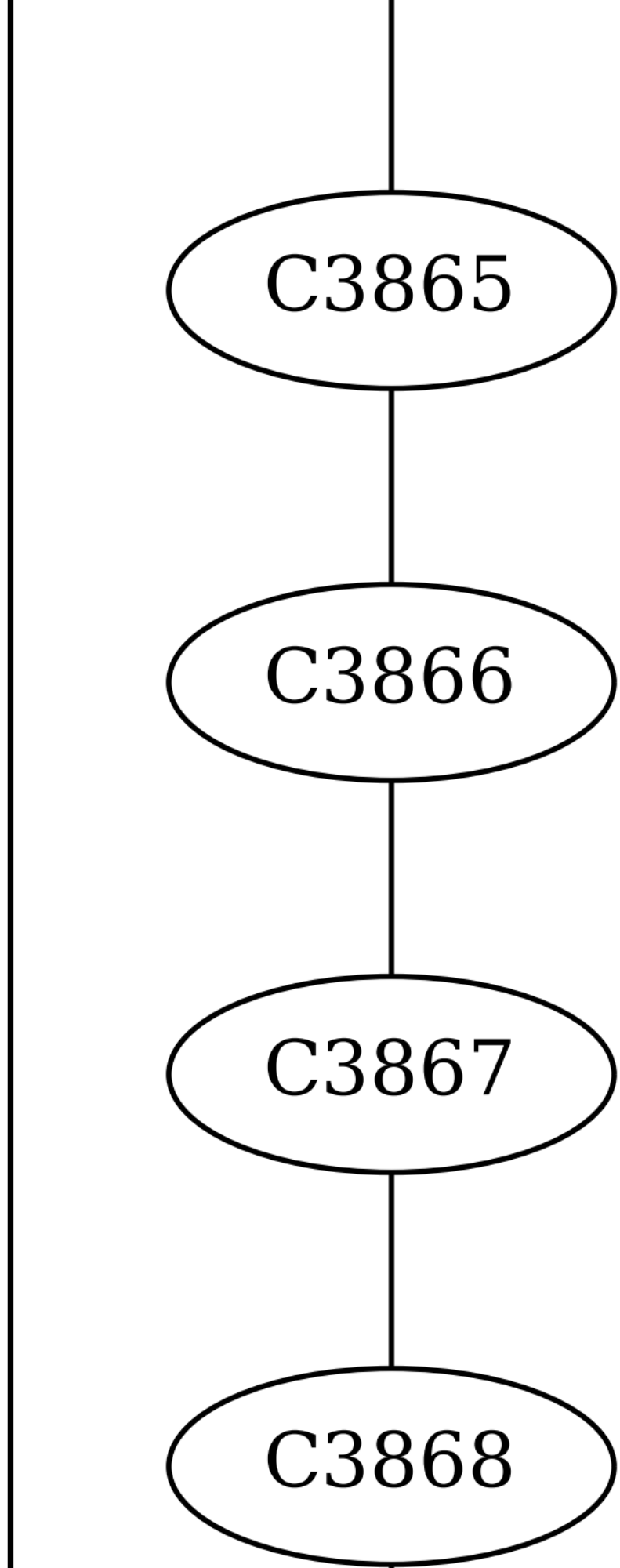
C3865
C3866
C3867
C3868

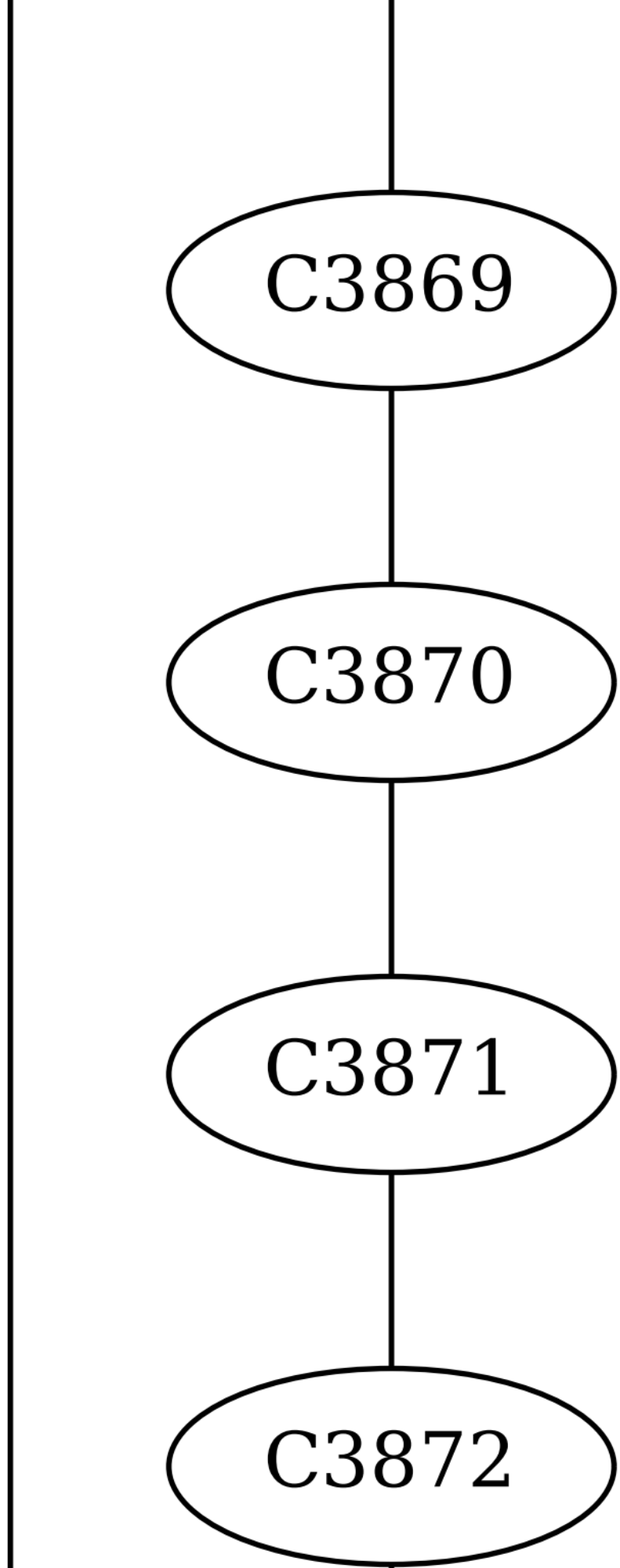
C3869
C3870
C3871
C3872

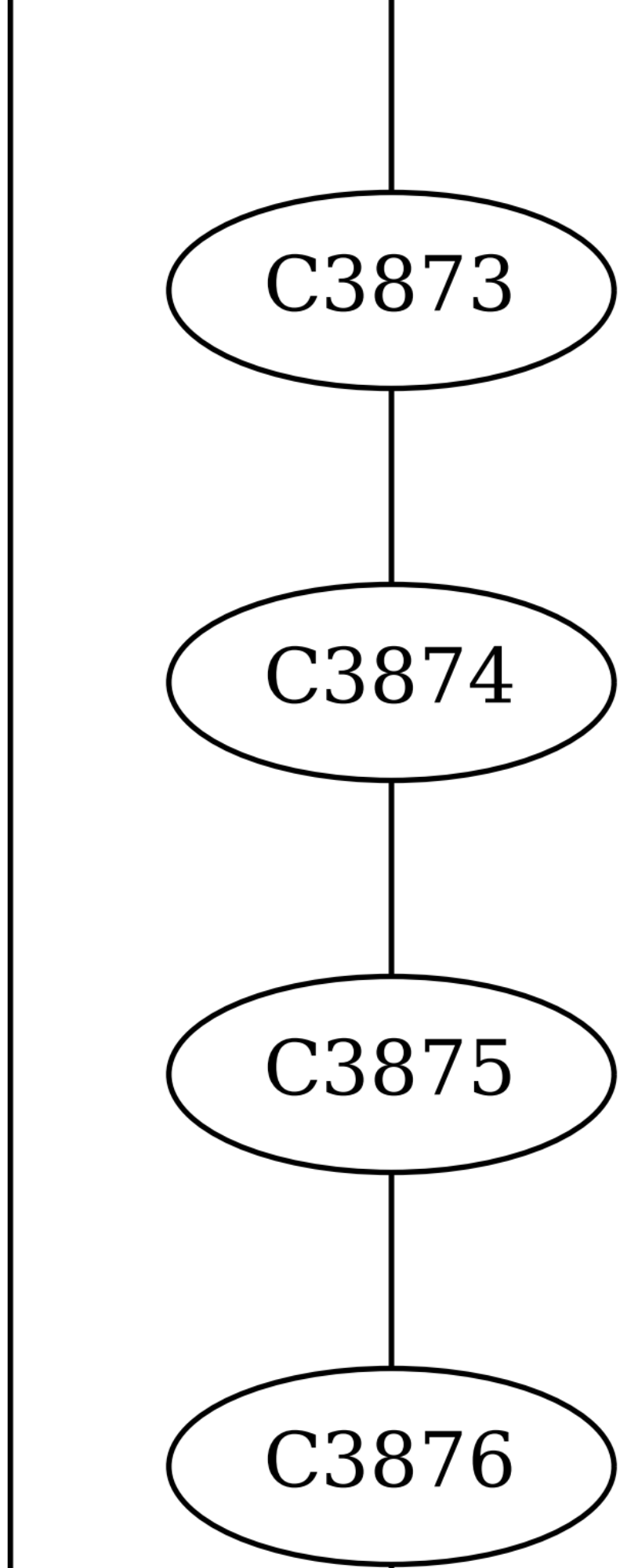
C3873
C3874
C3875
C3876

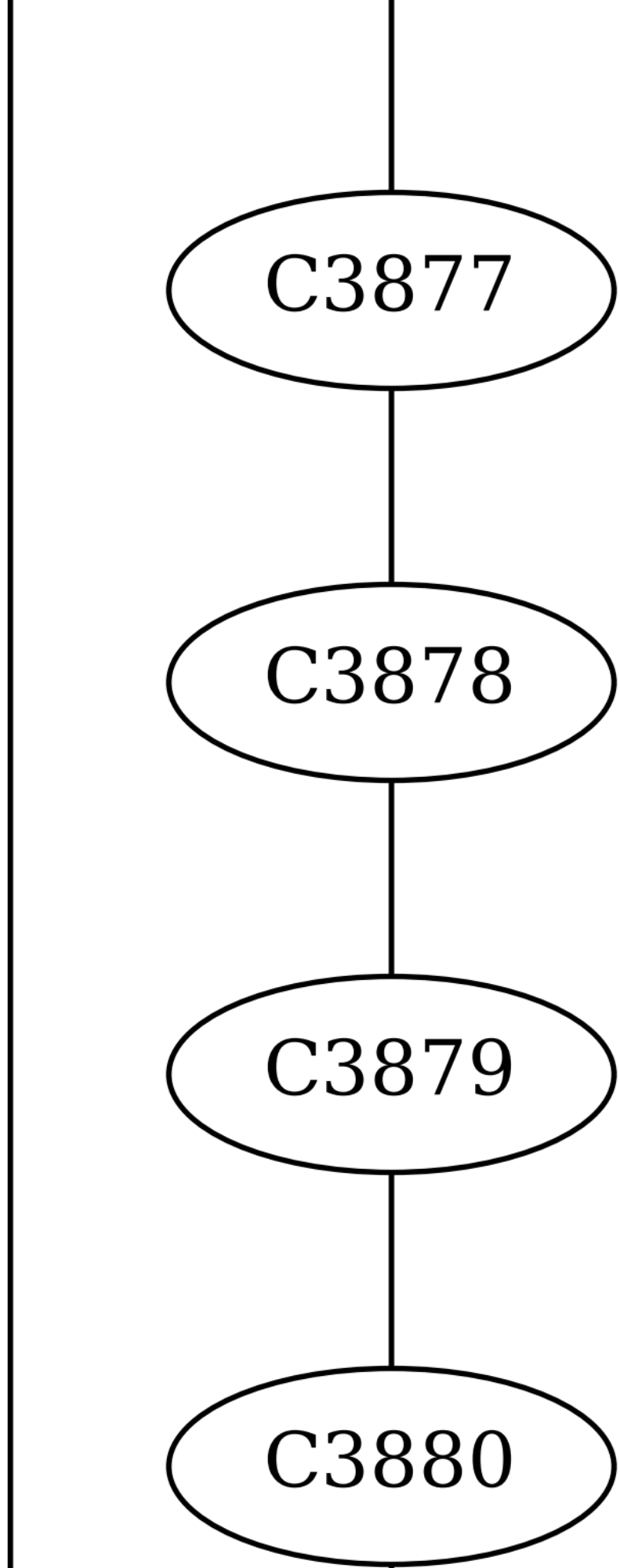
C3877
C3878
C3879
C3880

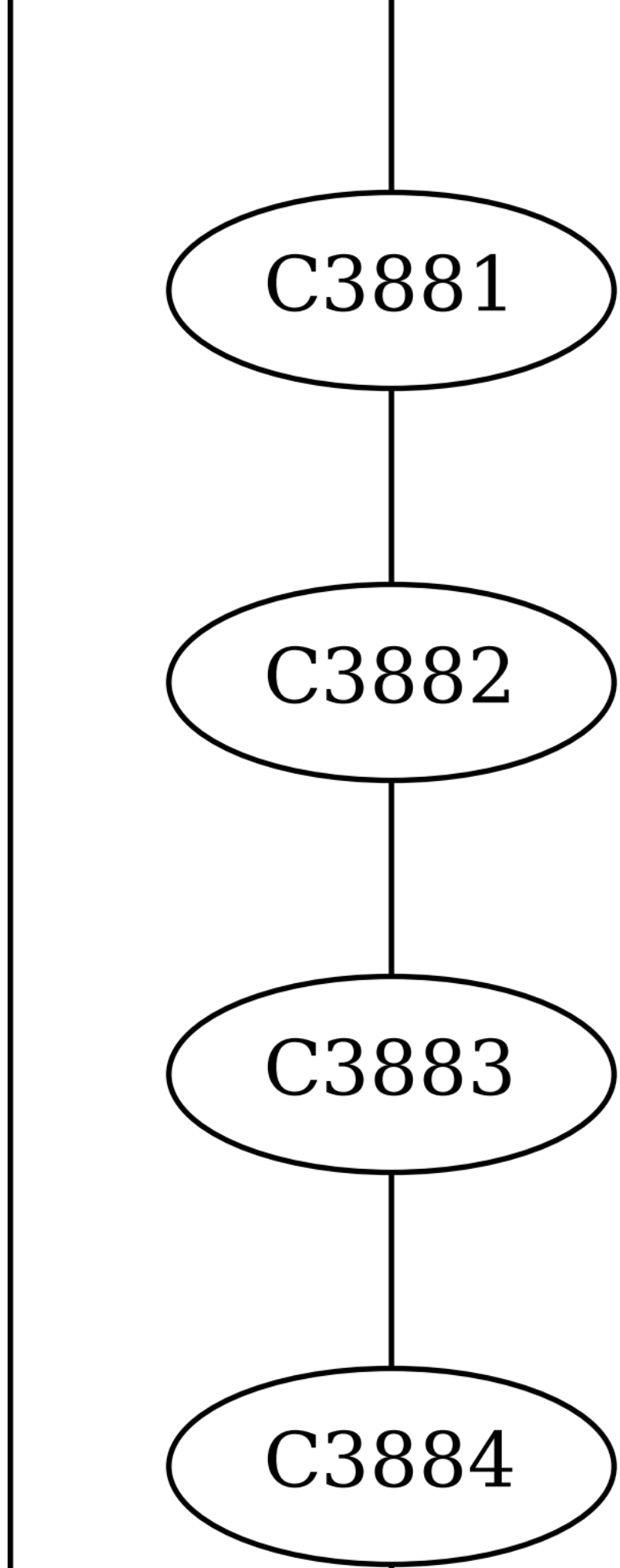
C3881
C3882
C3883
C3884

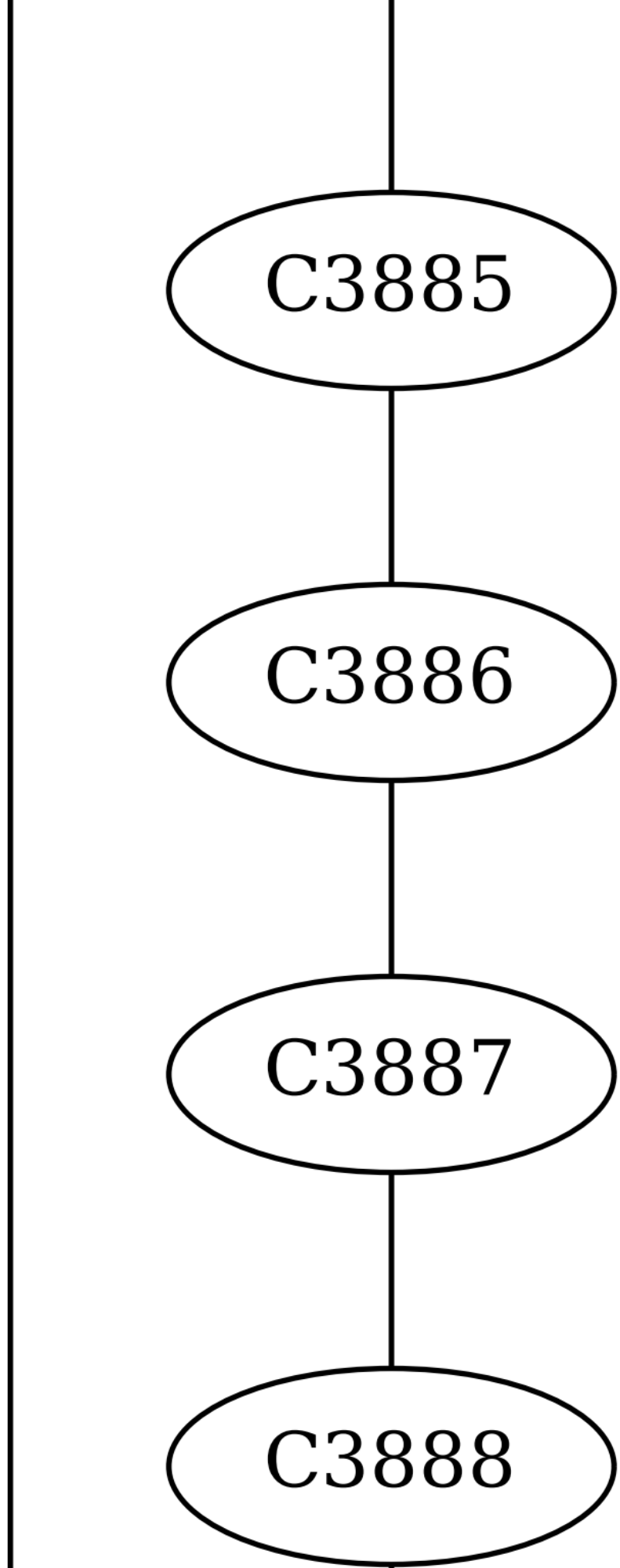
C3885
C3886
C3887
C3888

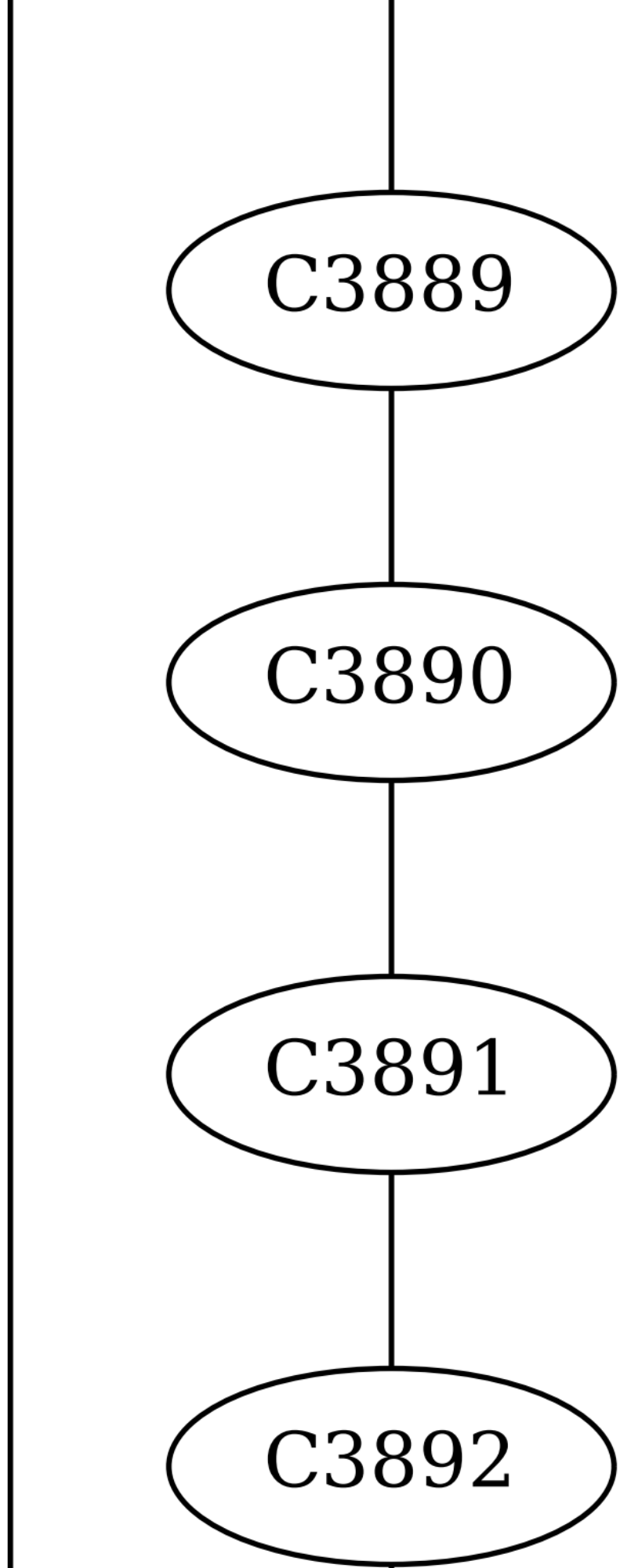
C3889
C3890
C3891
C3892

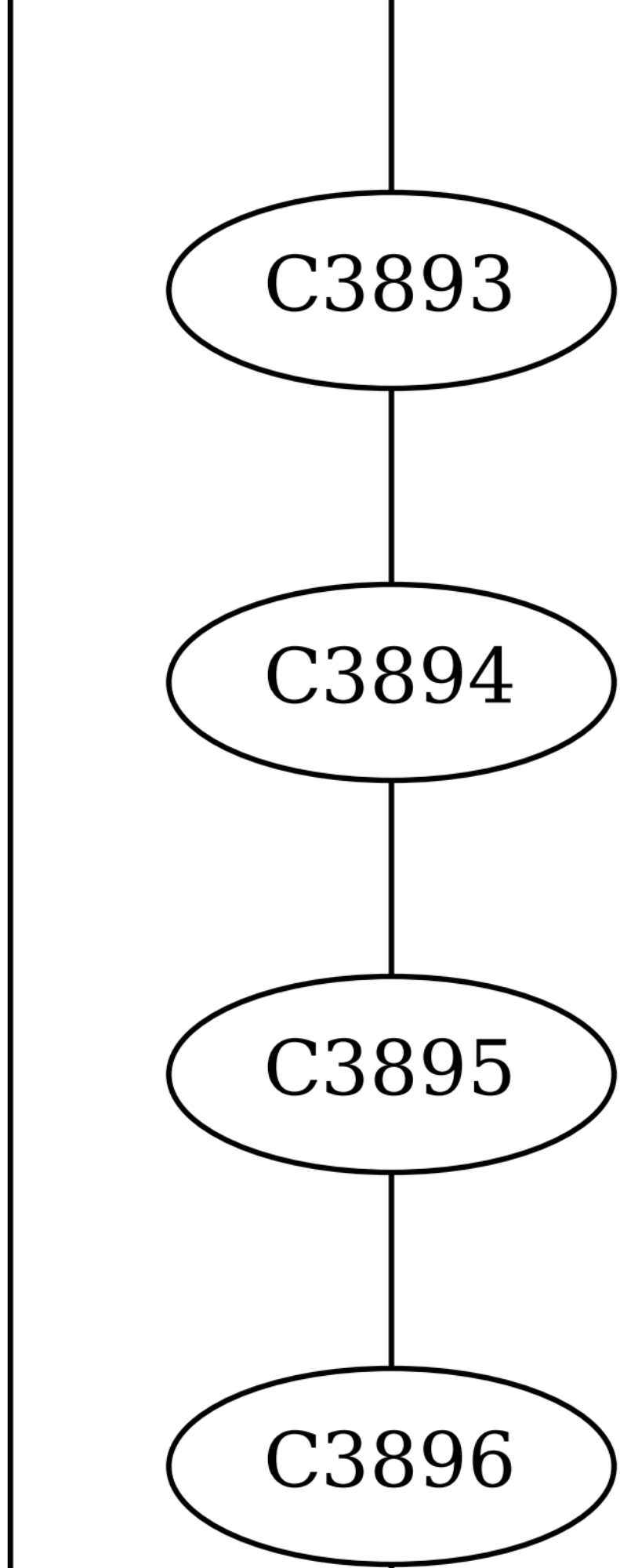
C3893
C3894
C3895
C3896

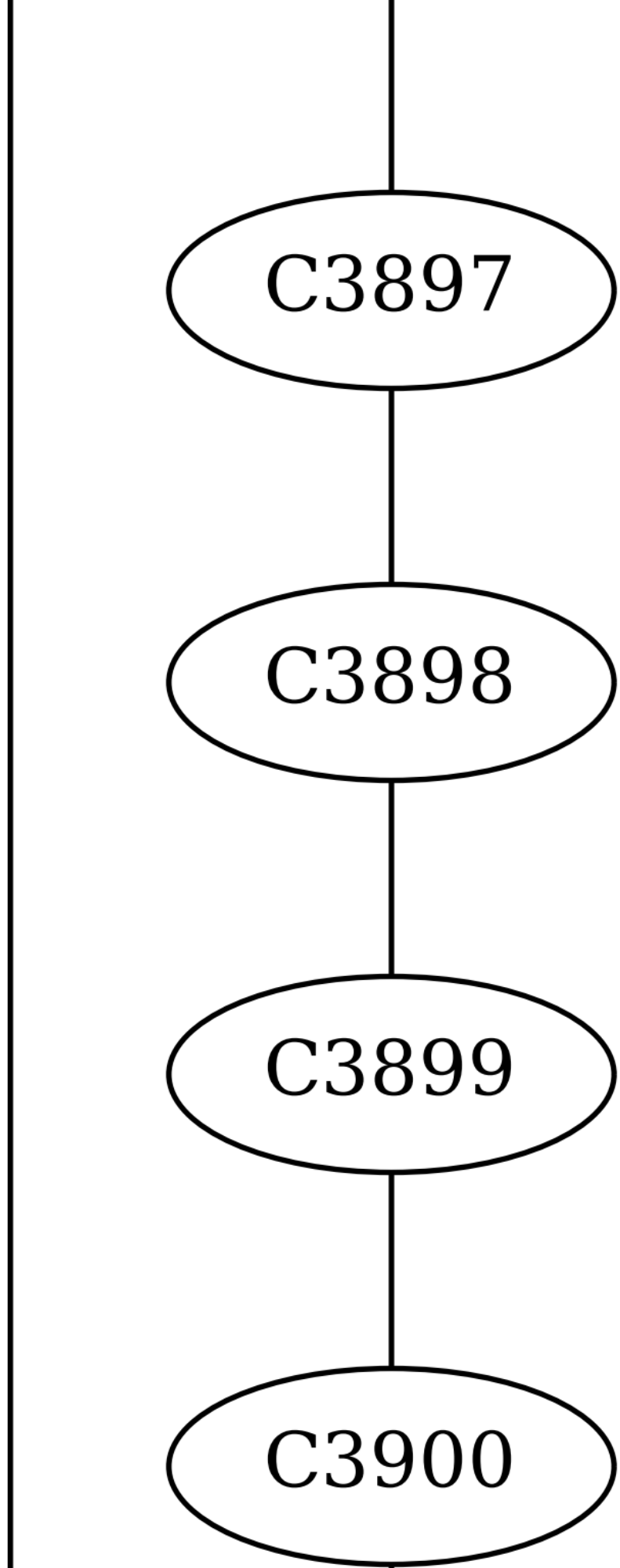
C3897
C3898
C3899
C3900

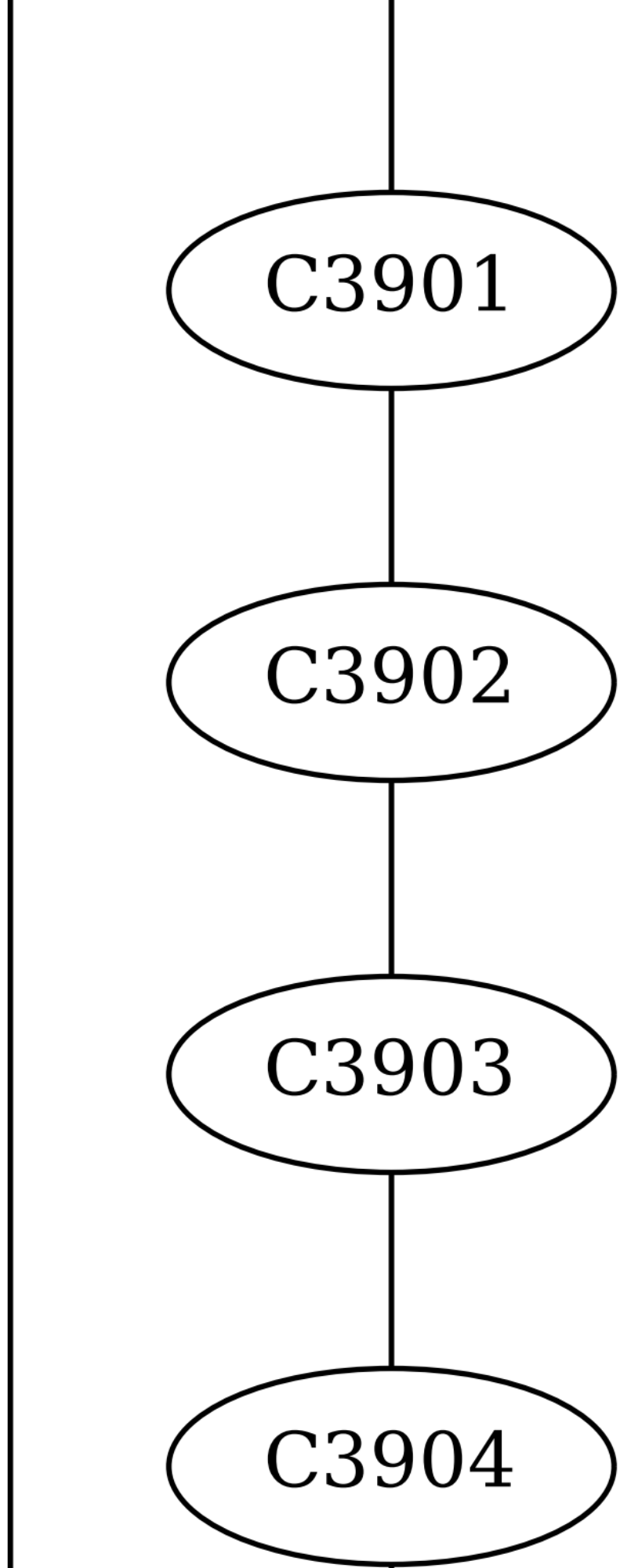
C3901
C3902
C3903
C3904

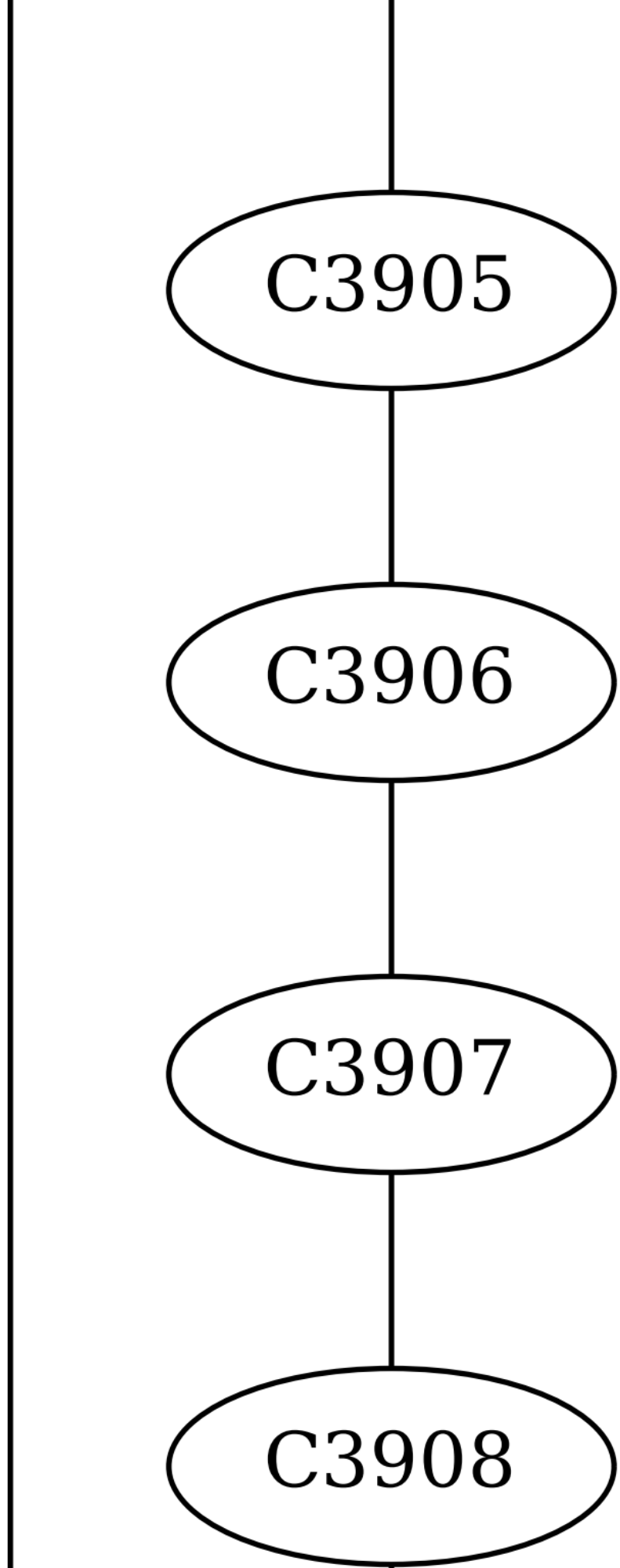
C3905
C3906
C3907
C3908

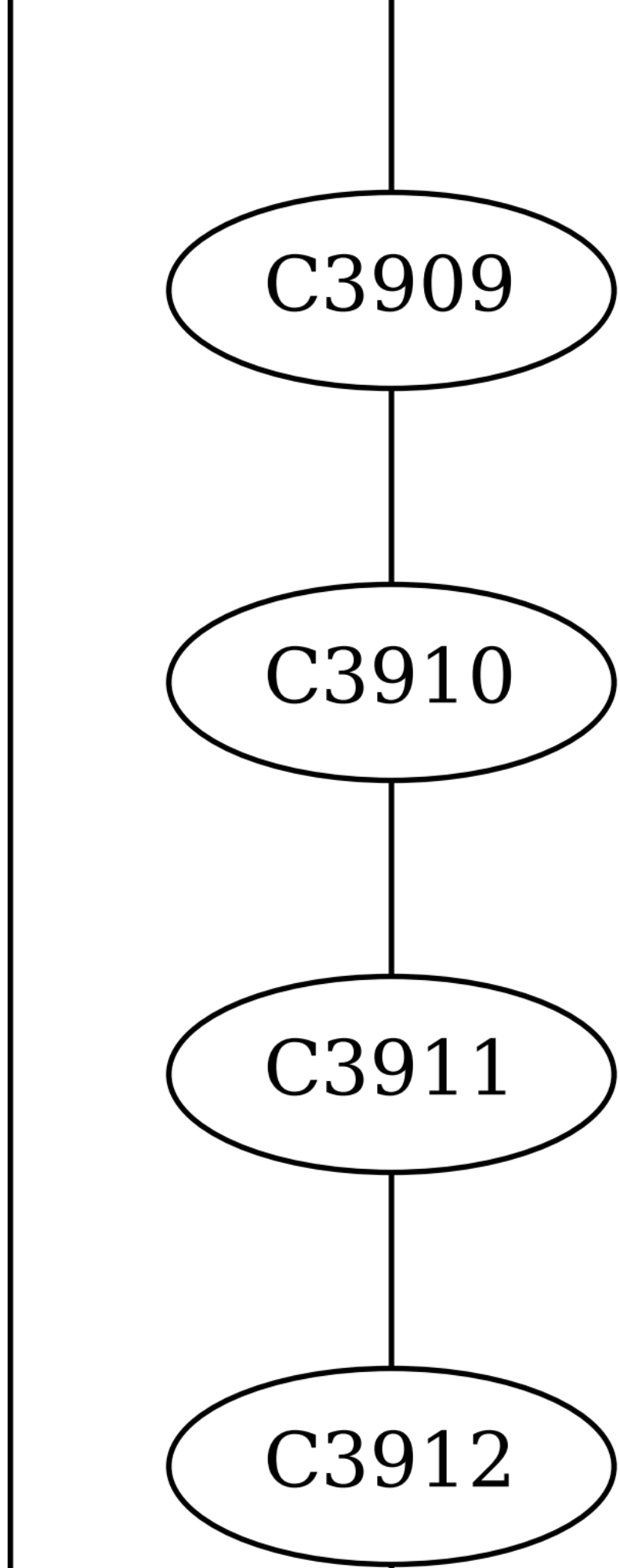
C3909
C3910
C3911
C3912

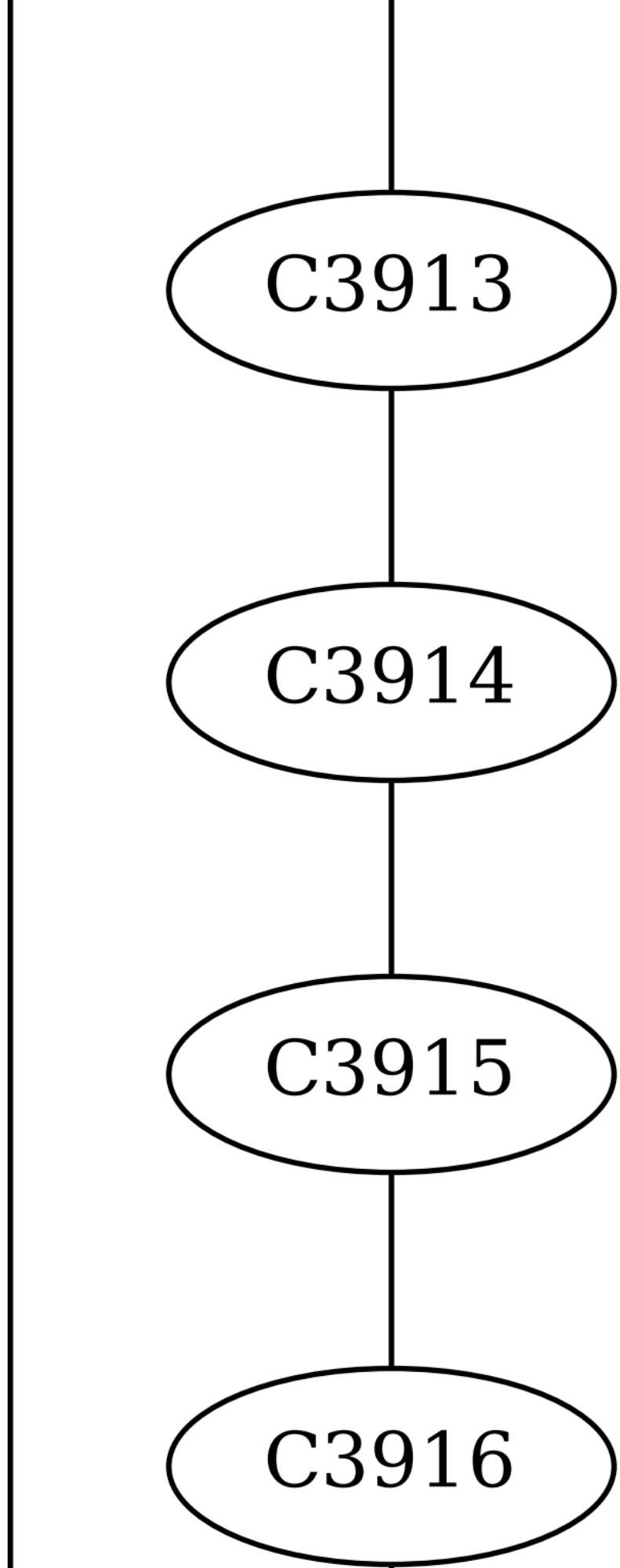
C3913
C3914
C3915
C3916

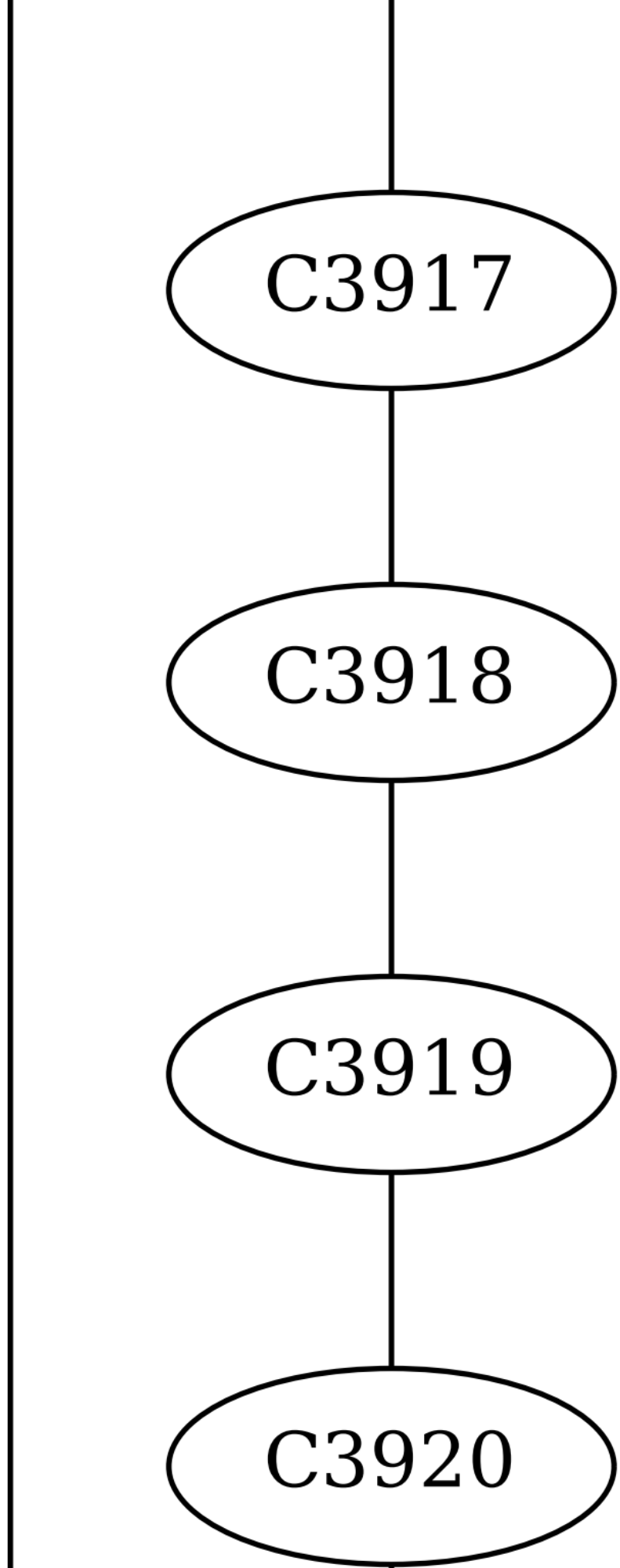
C3917
C3918
C3919
C3920

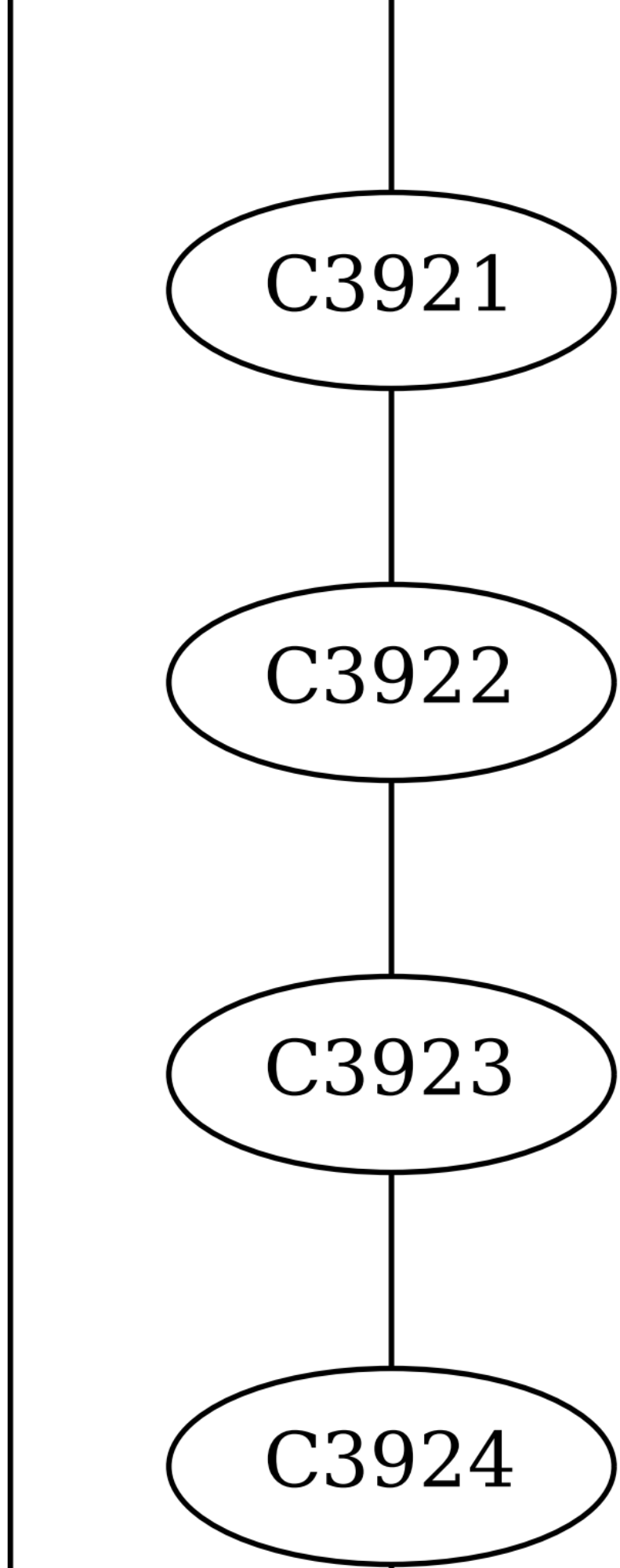
C3921
C3922
C3923
C3924

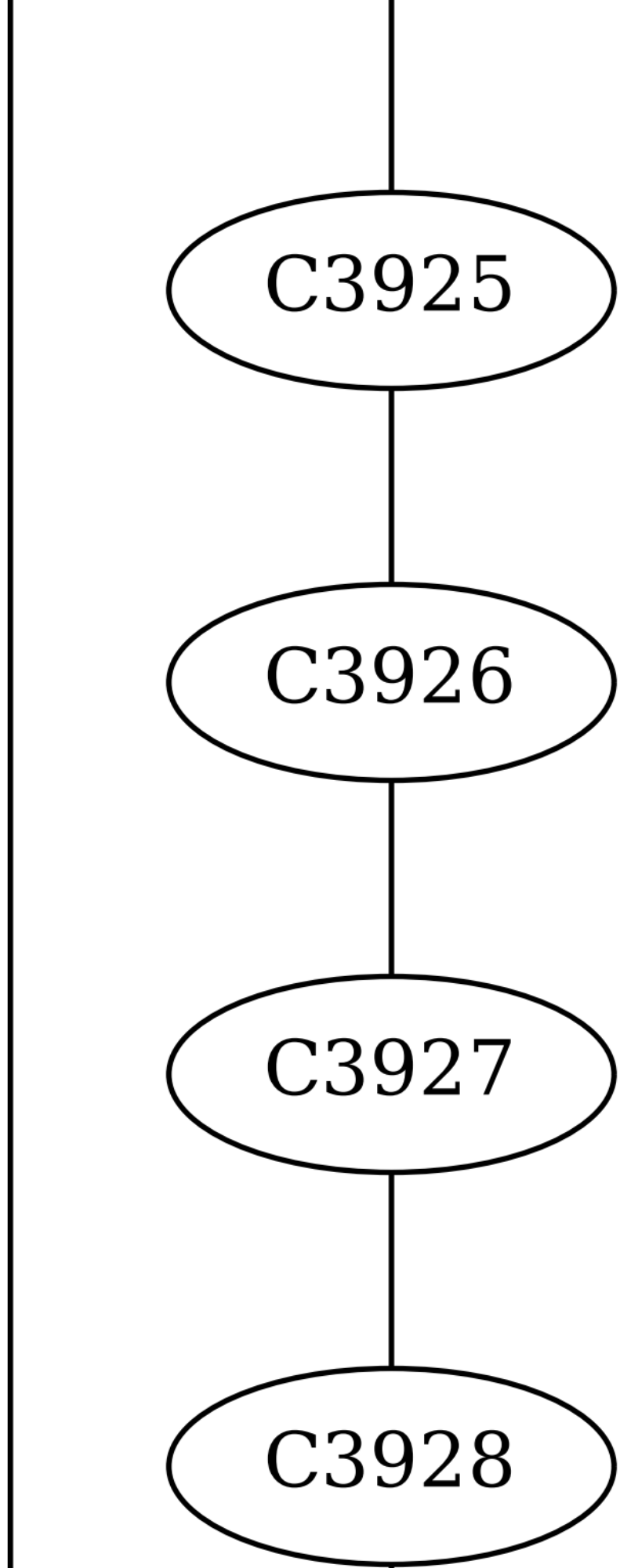
C3925
C3926
C3927
C3928

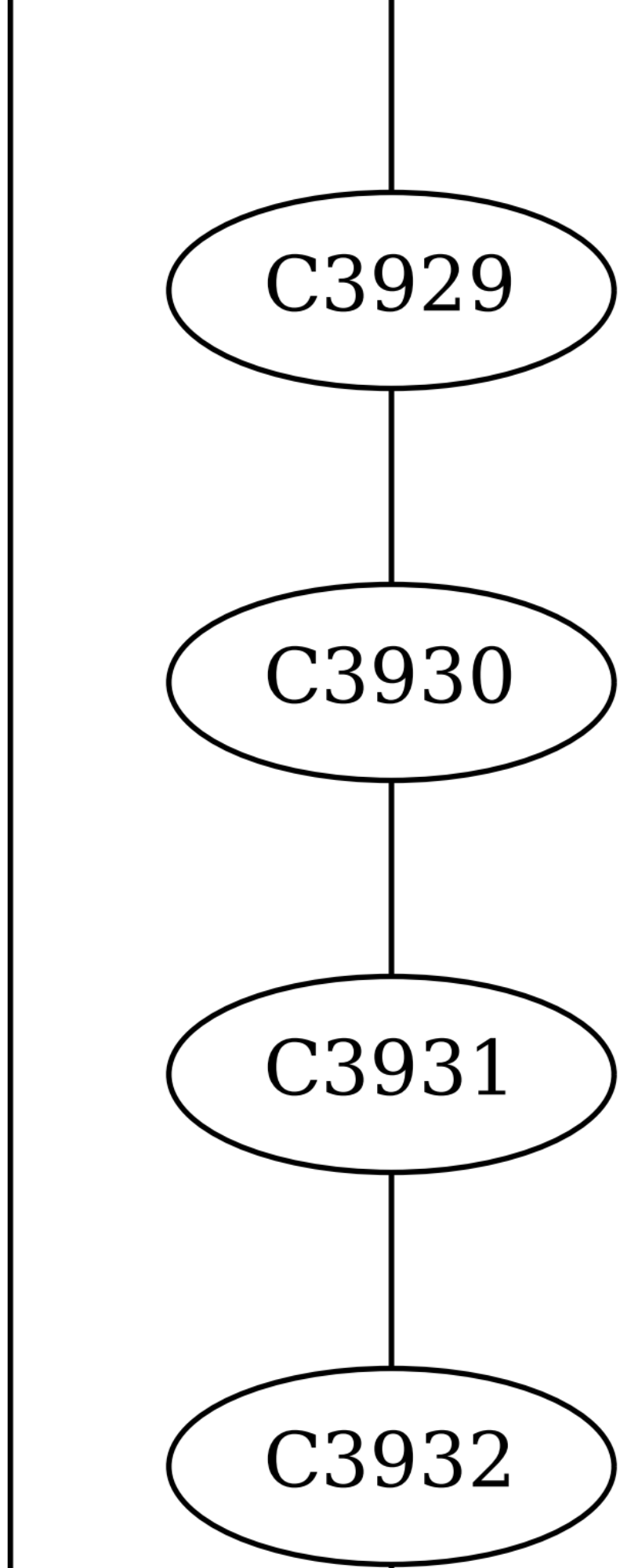
C3929
C3930
C3931
C3932

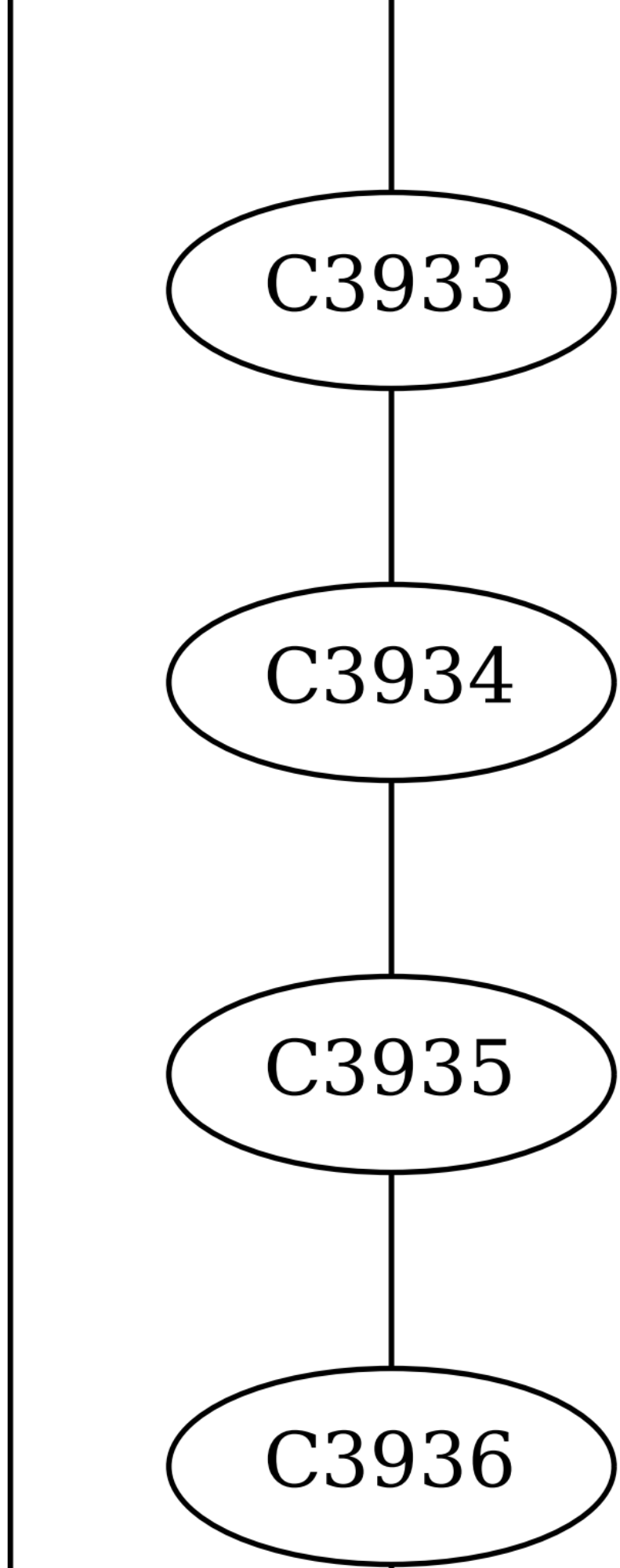
C3933
C3934
C3935
C3936

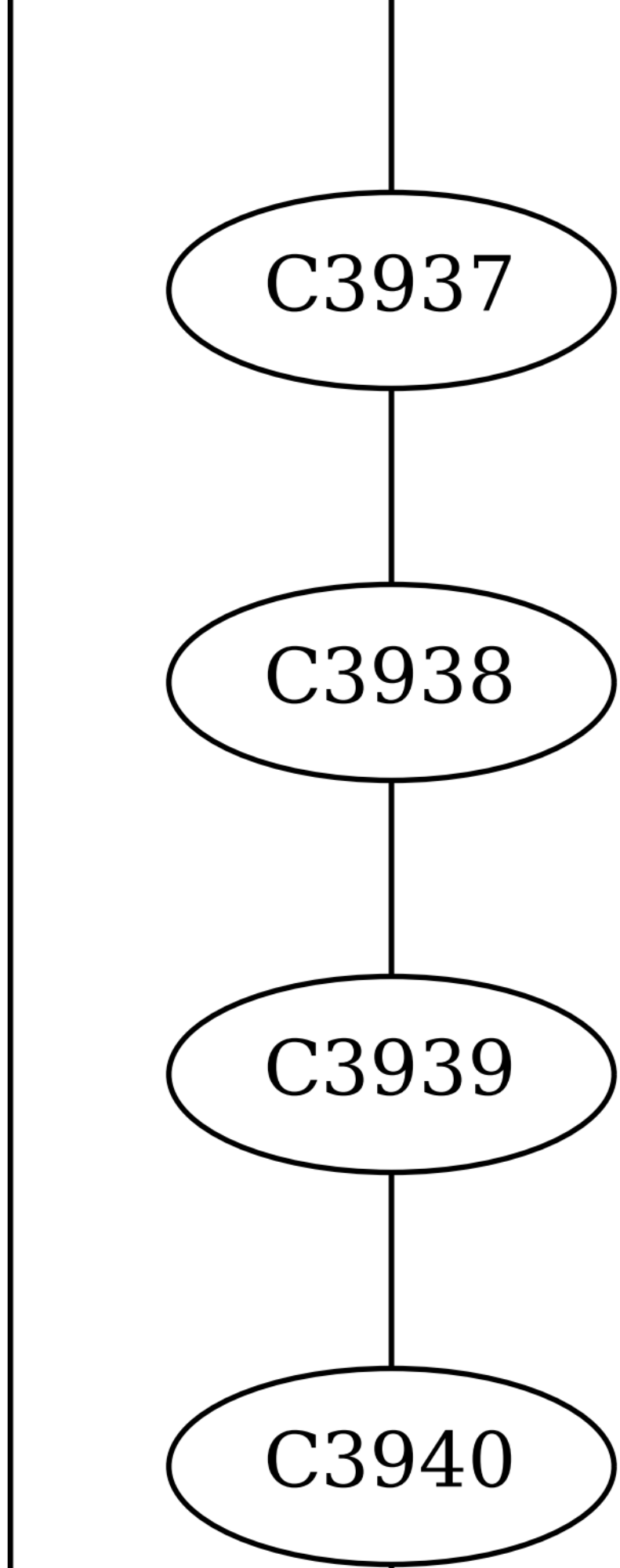
C3937
C3938
C3939
C3940

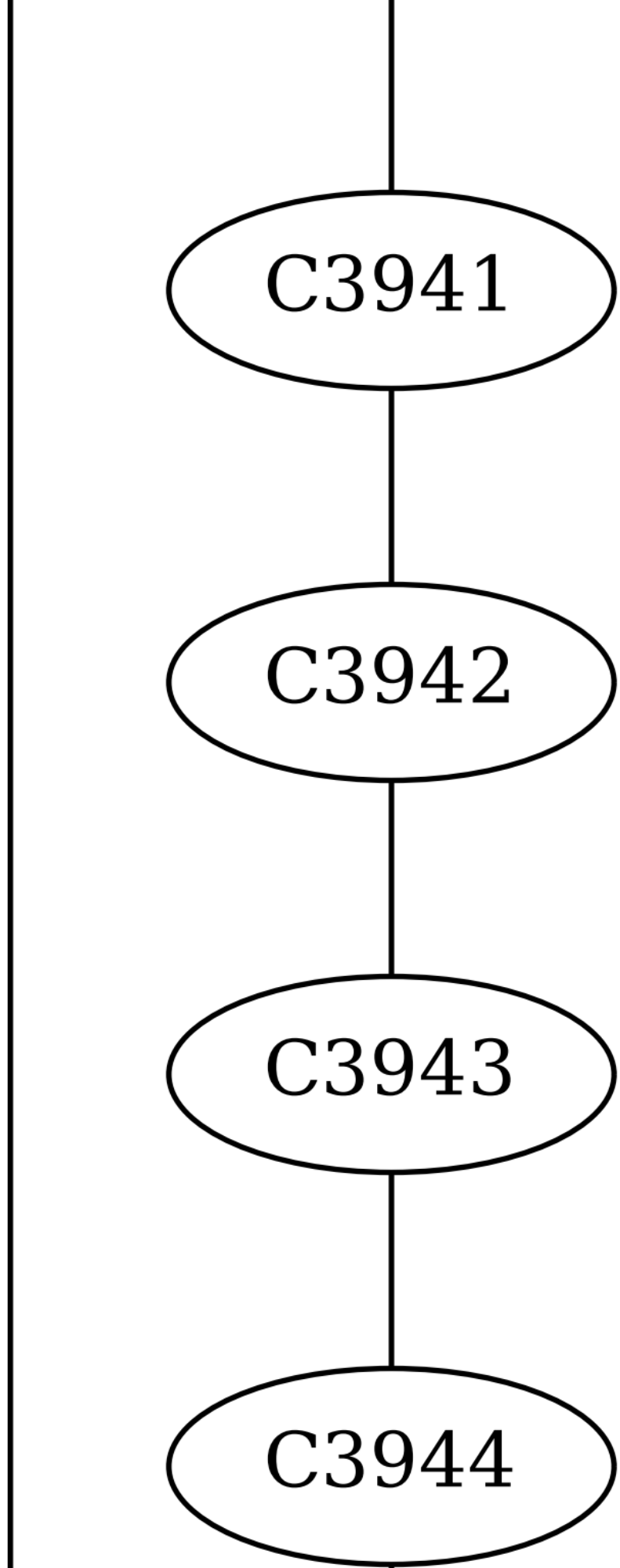
C3941
C3942
C3943
C3944

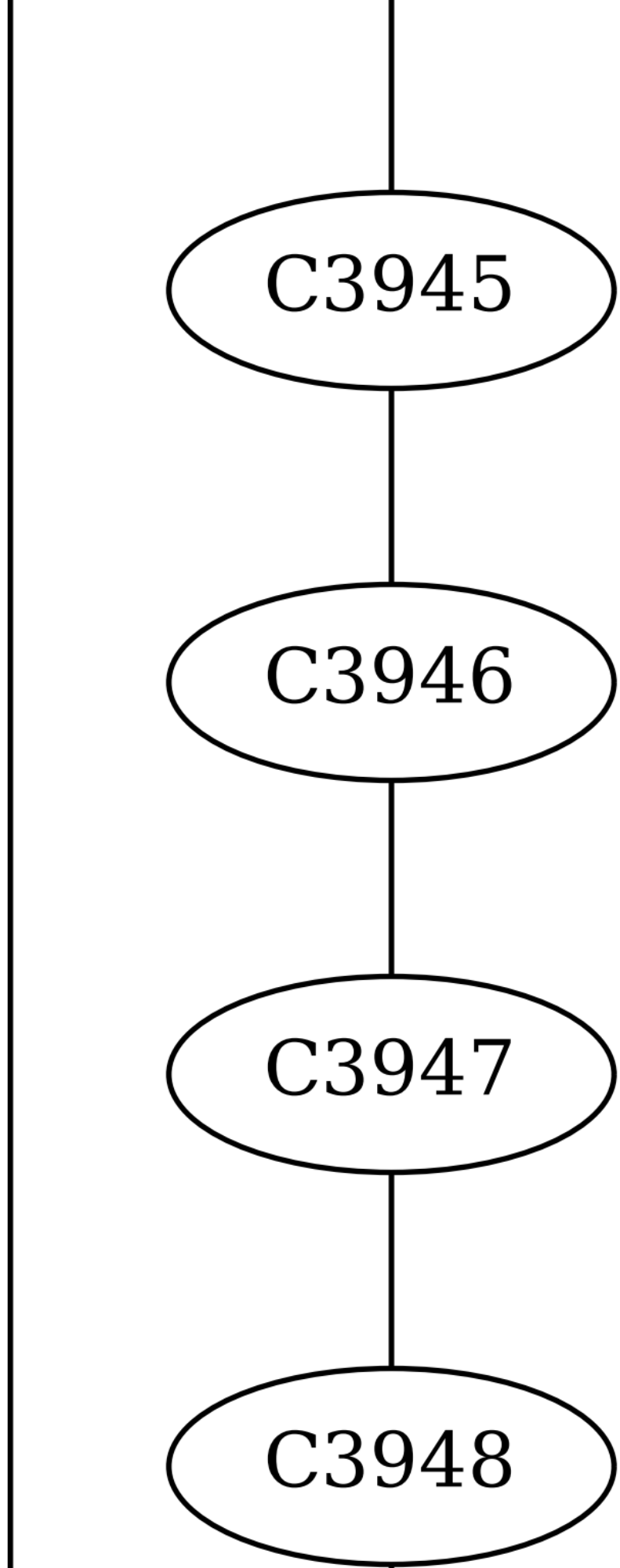
C3945
C3946
C3947
C3948

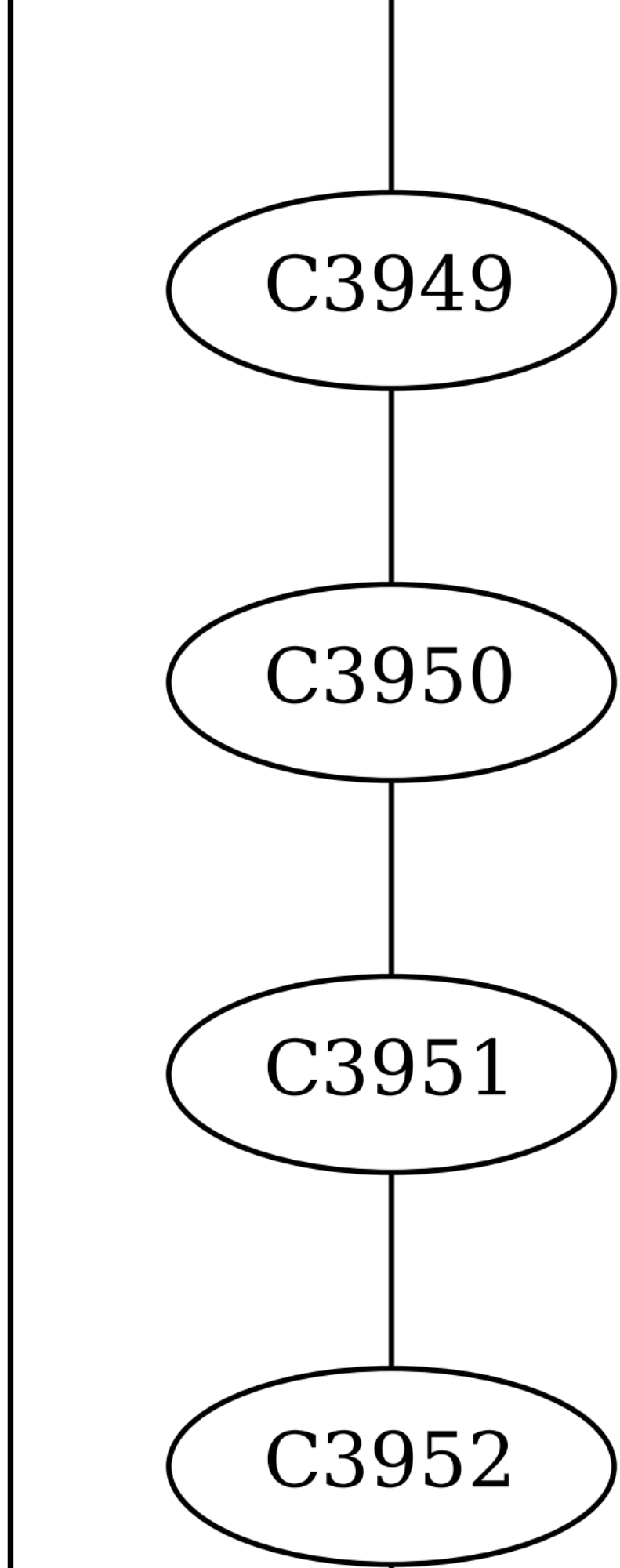
C3949
C3950
C3951
C3952

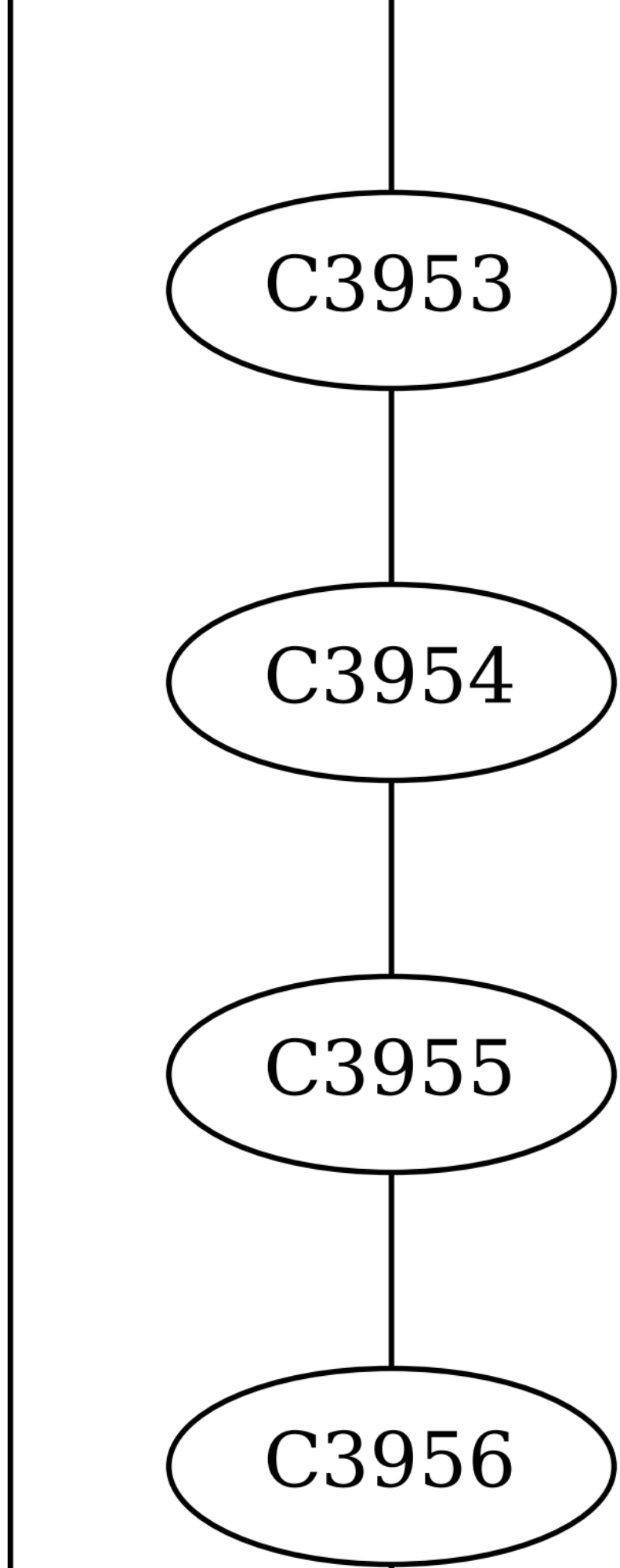
C3953
C3954
C3955
C3956

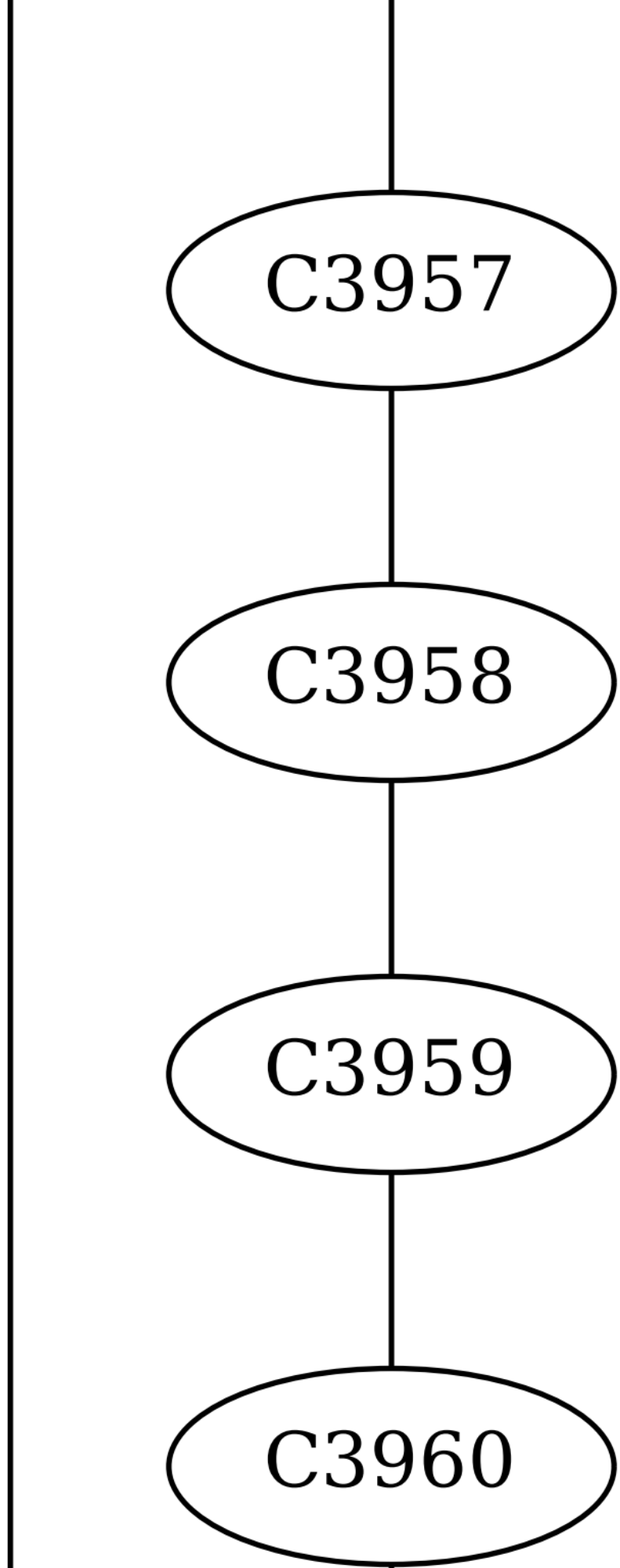
C3957
C3958
C3959
C3960

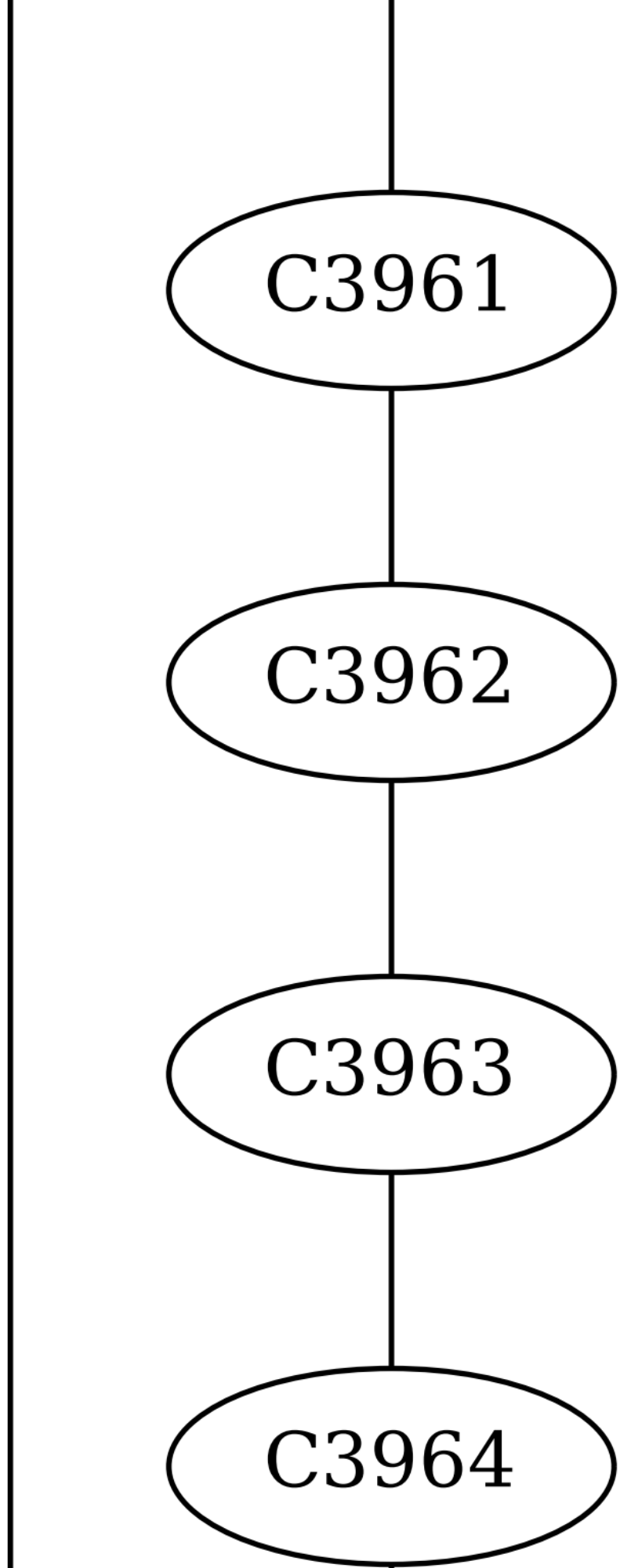
C3961
C3962
C3963
C3964

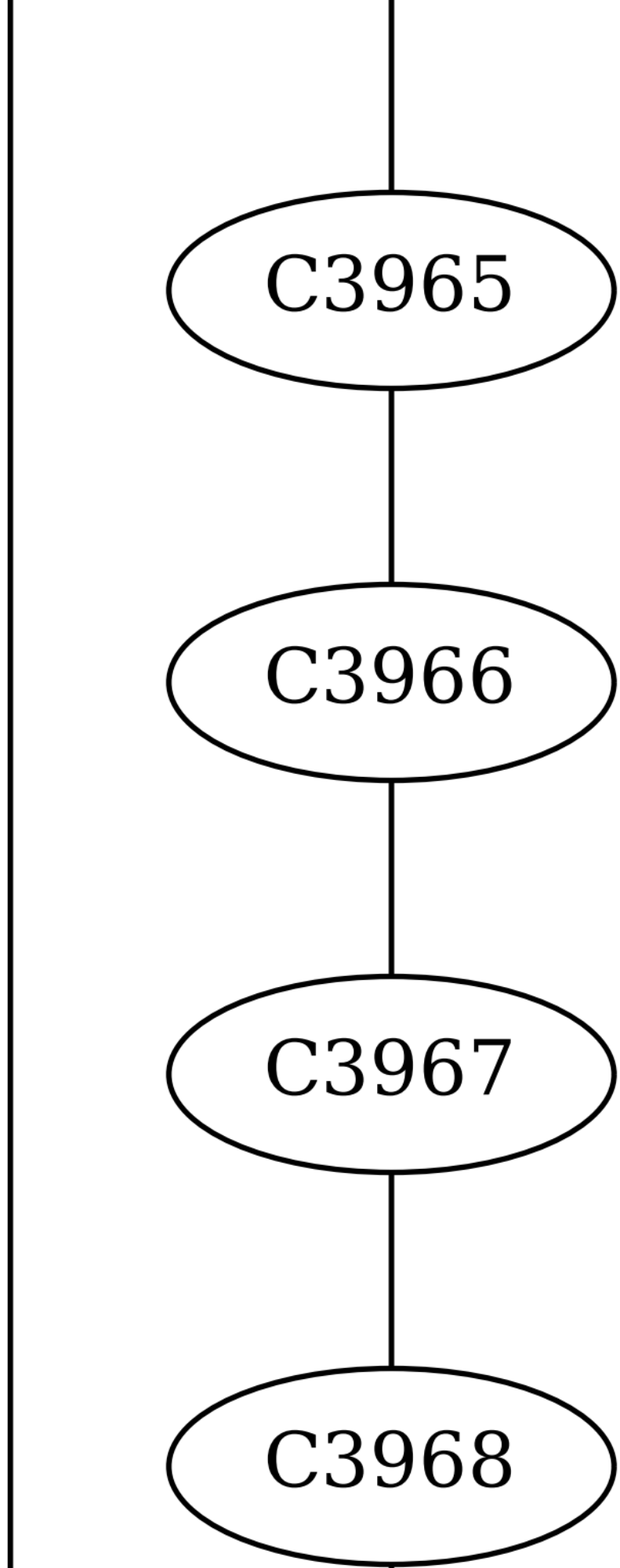
C3965
C3966
C3967
C3968

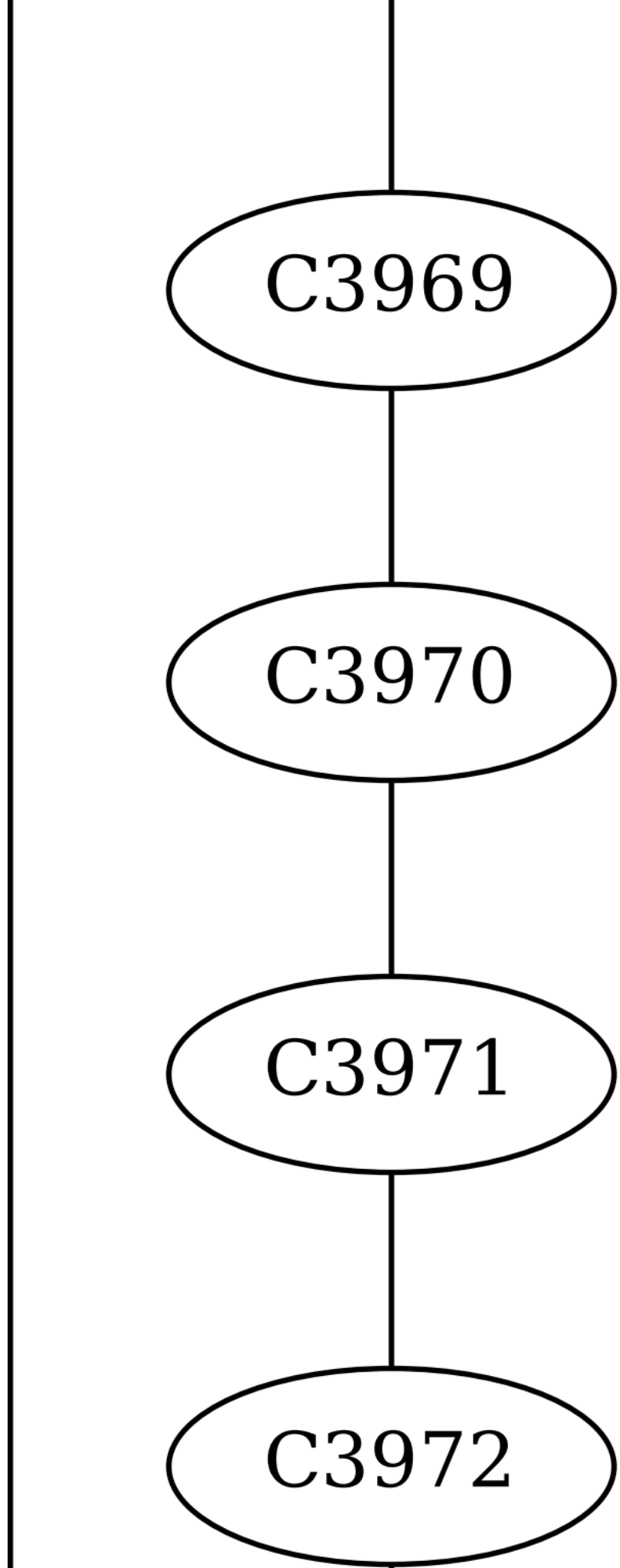
C3969
C3970
C3971
C3972

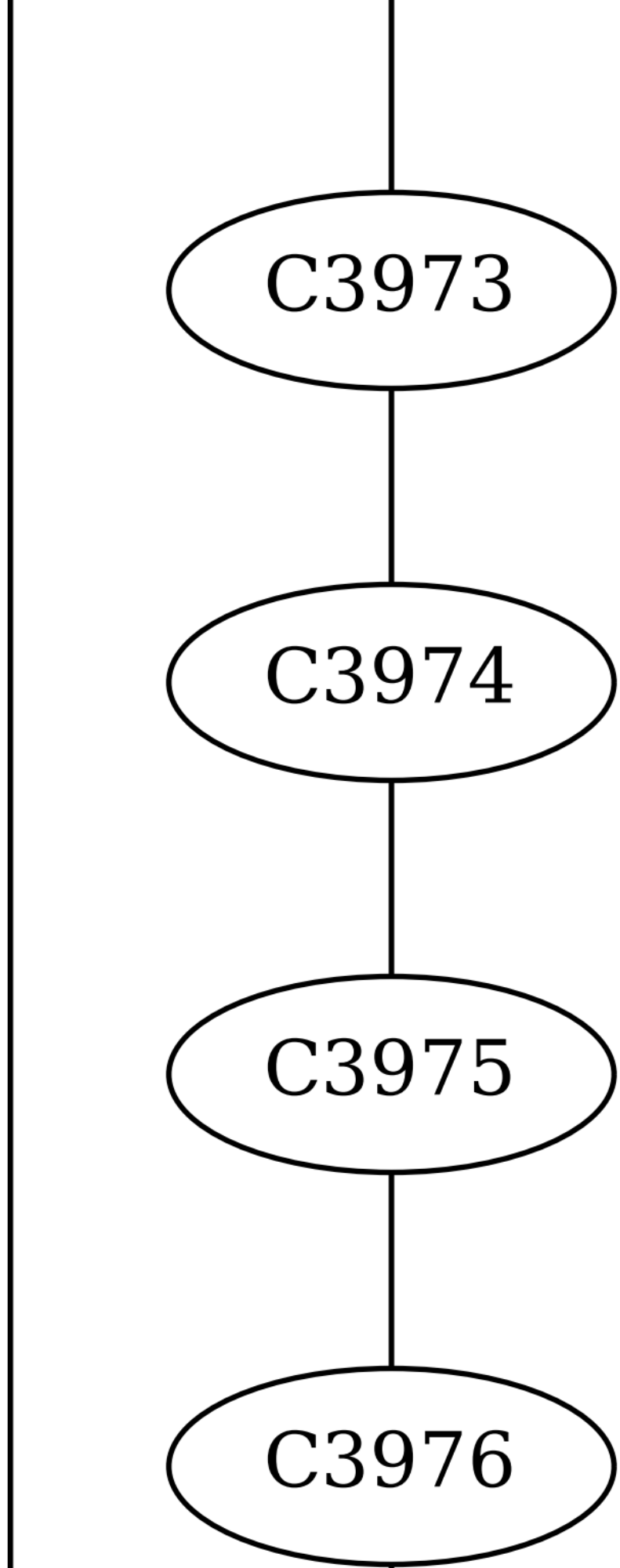
C3973
C3974
C3975
C3976

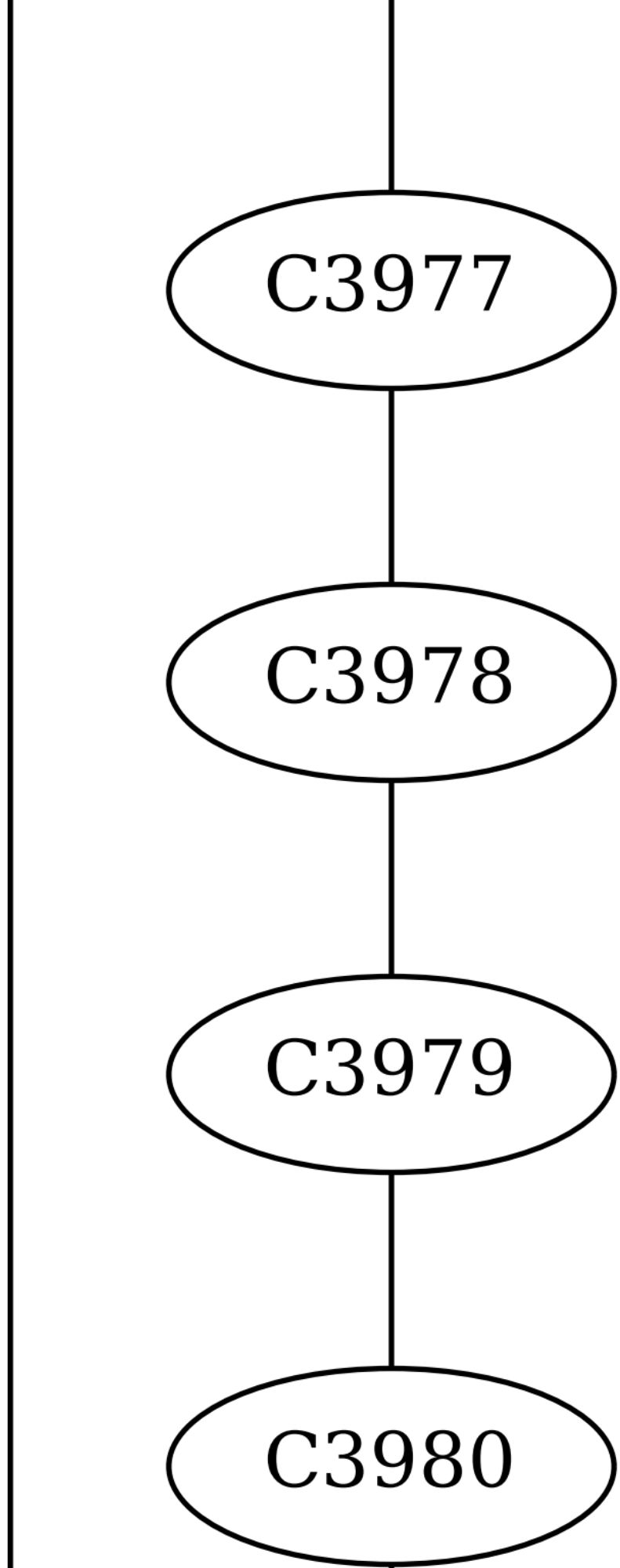
C3977
C3978
C3979
C3980

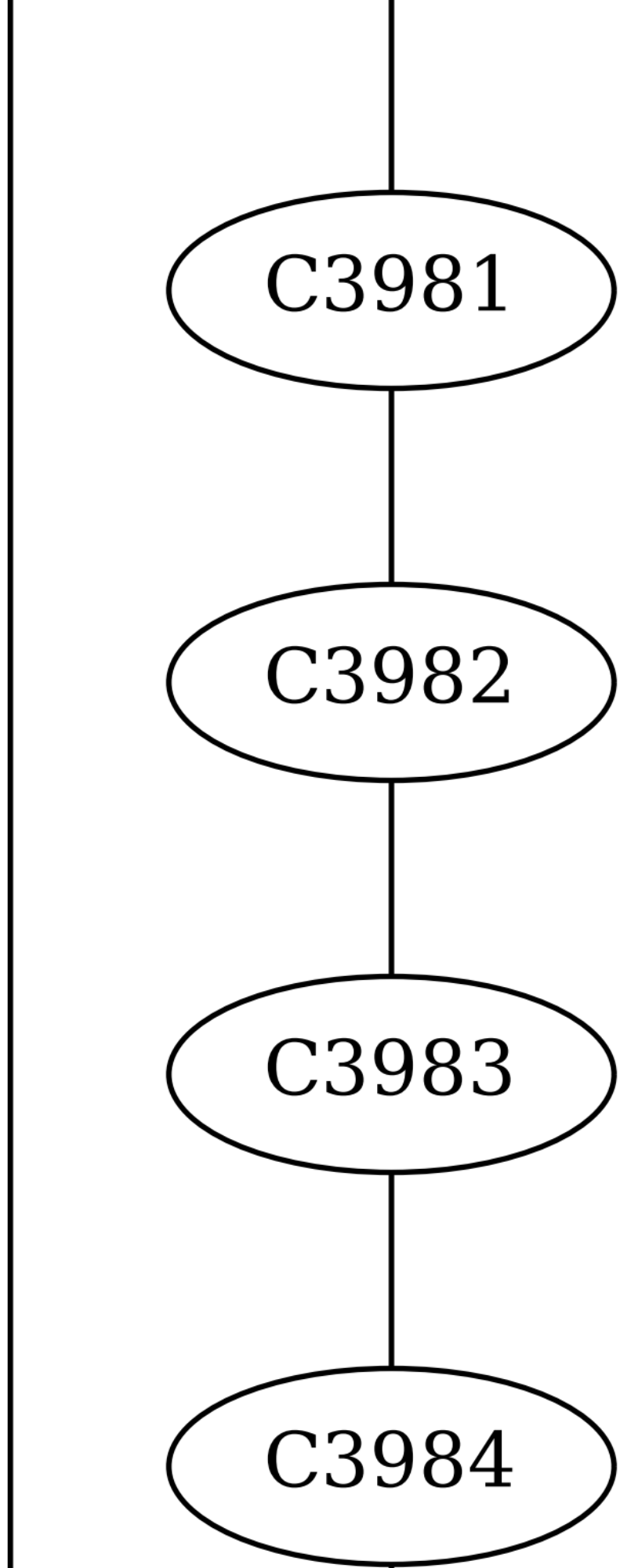
C3981
C3982
C3983
C3984

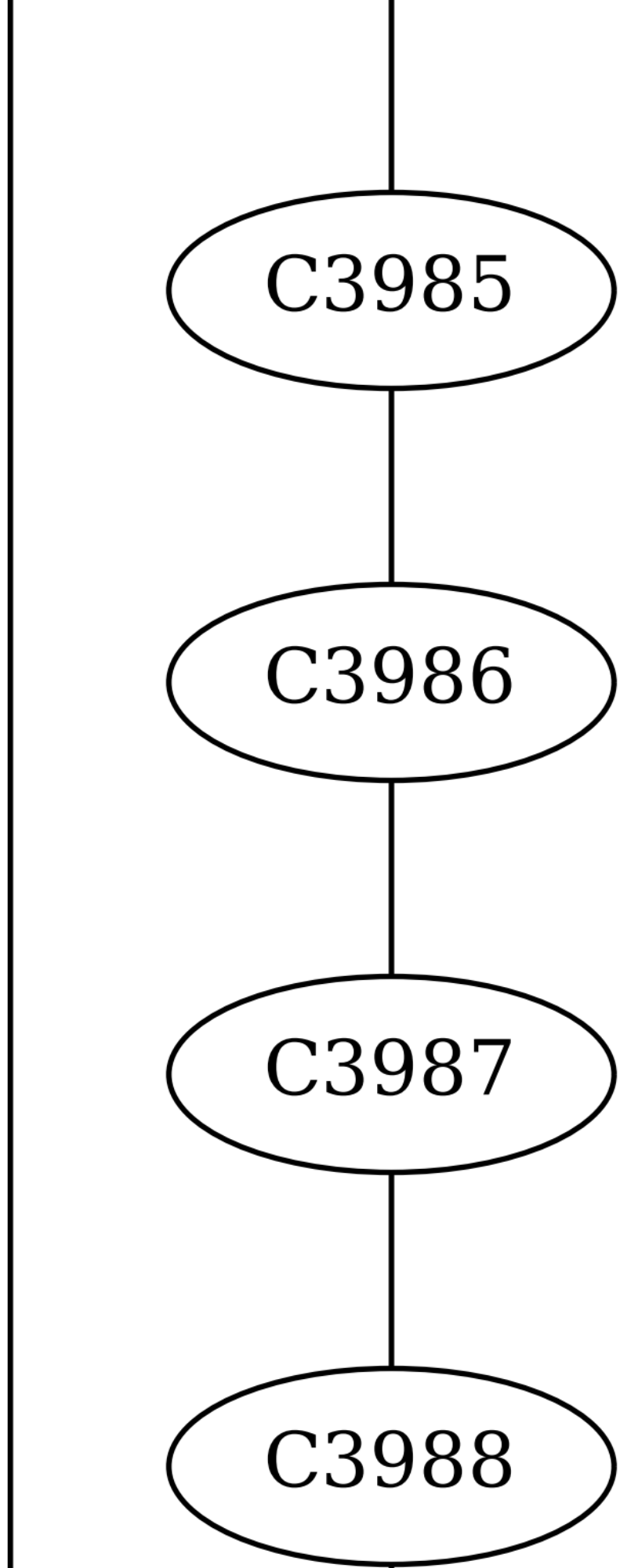
C3985
C3986
C3987
C3988

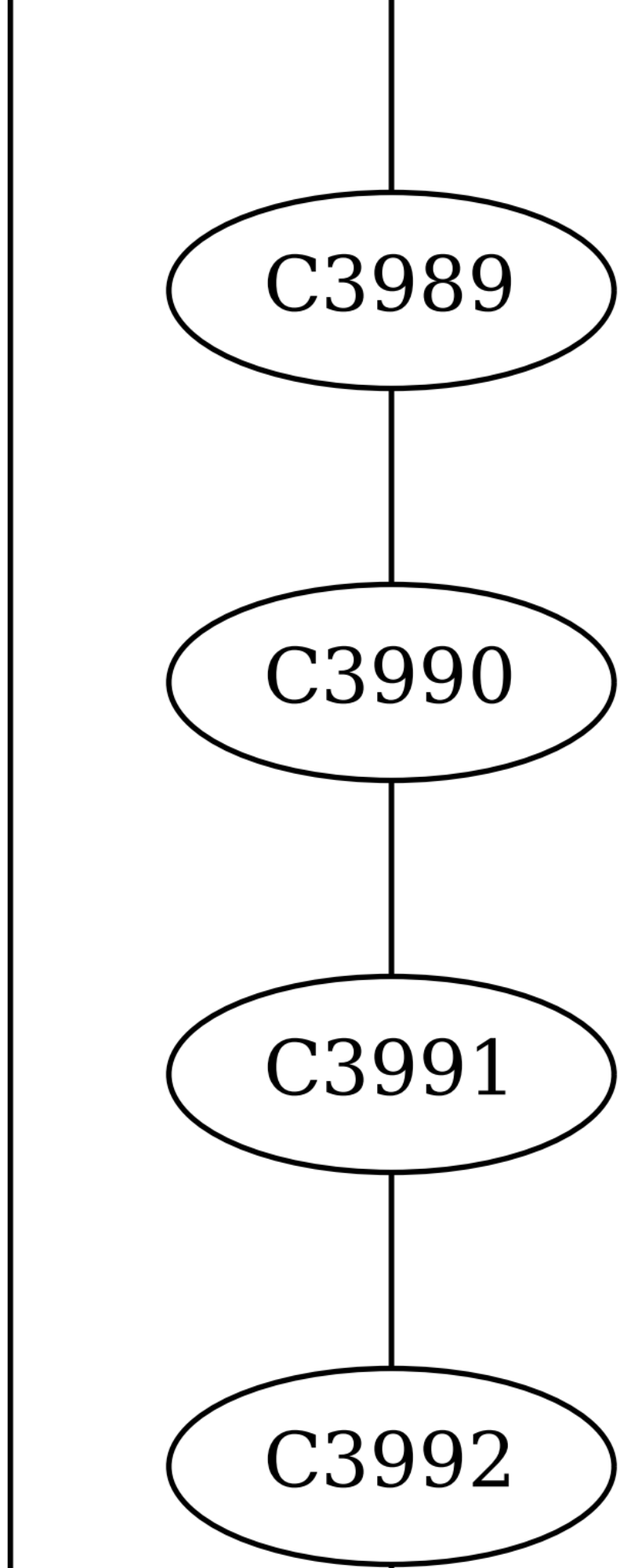
C3989
C3990
C3991
C3992

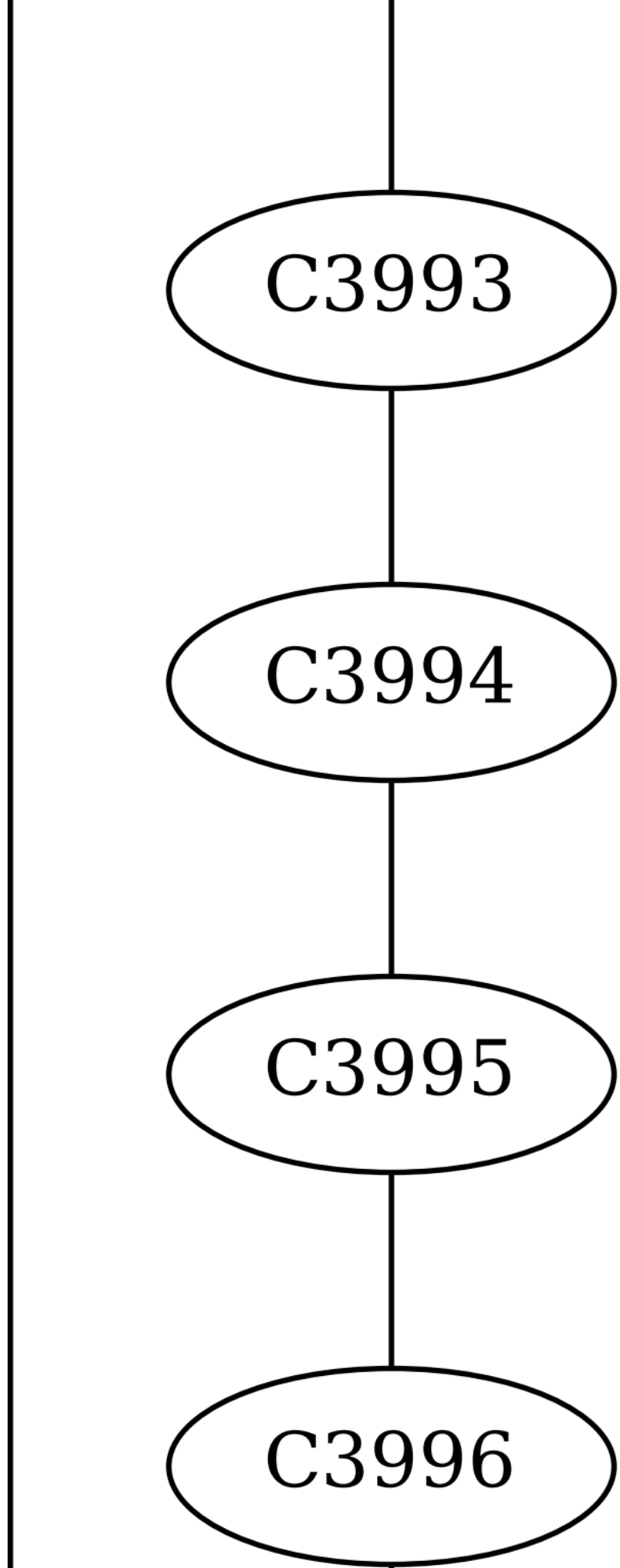
C3993
C3994
C3995
C3996

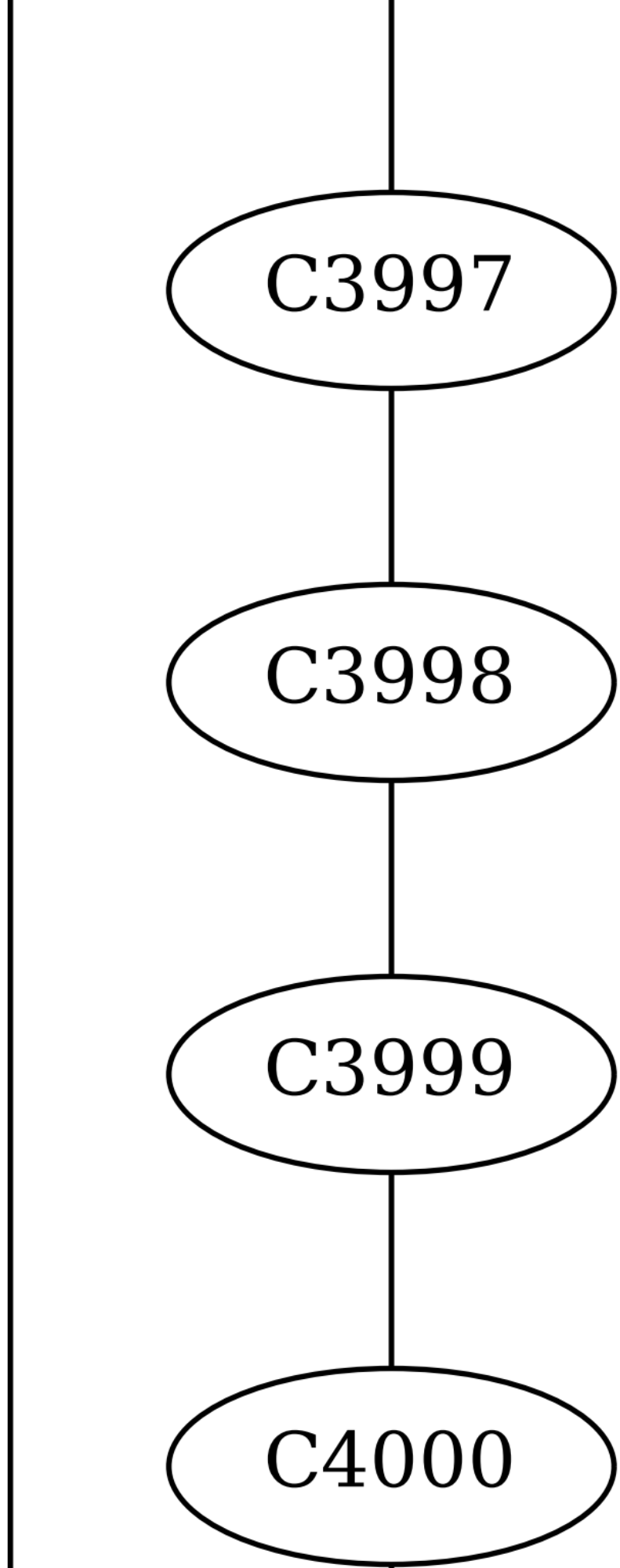
C3997
C3998
C3999
C4000

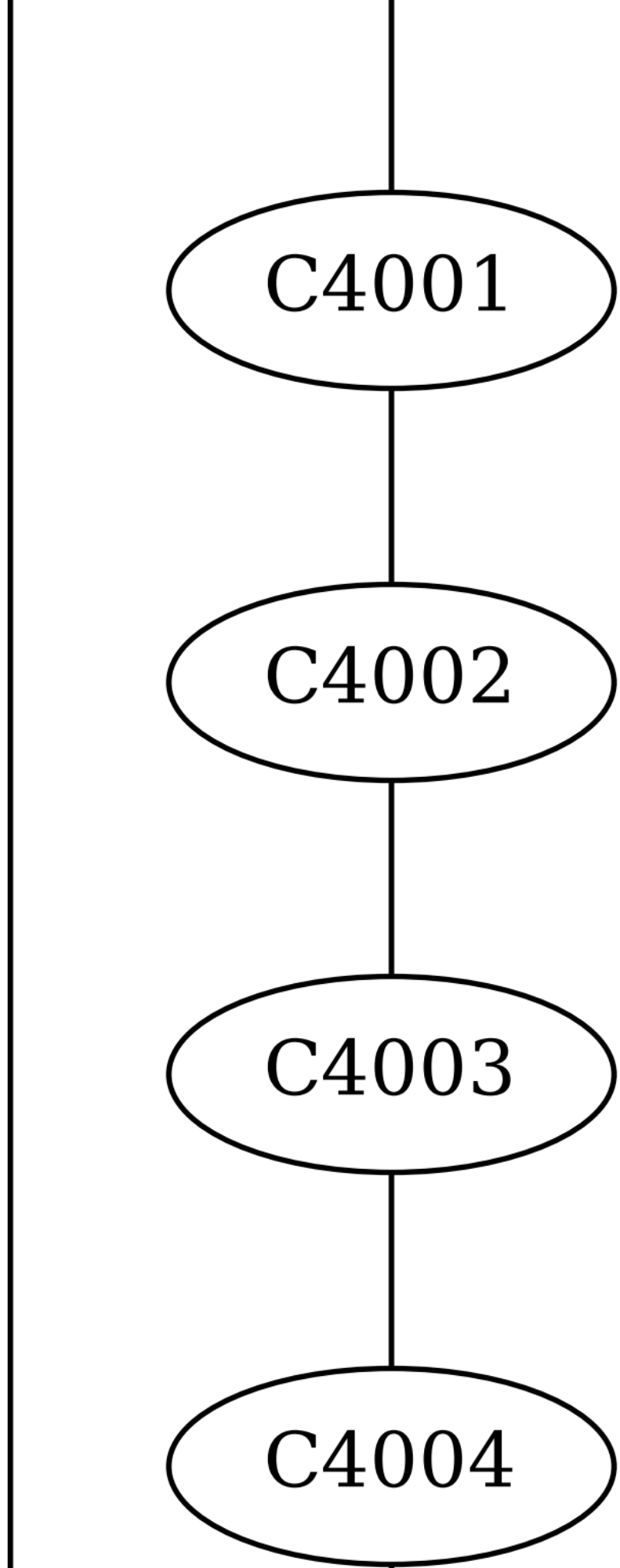
C4001
C4002
C4003
C4004

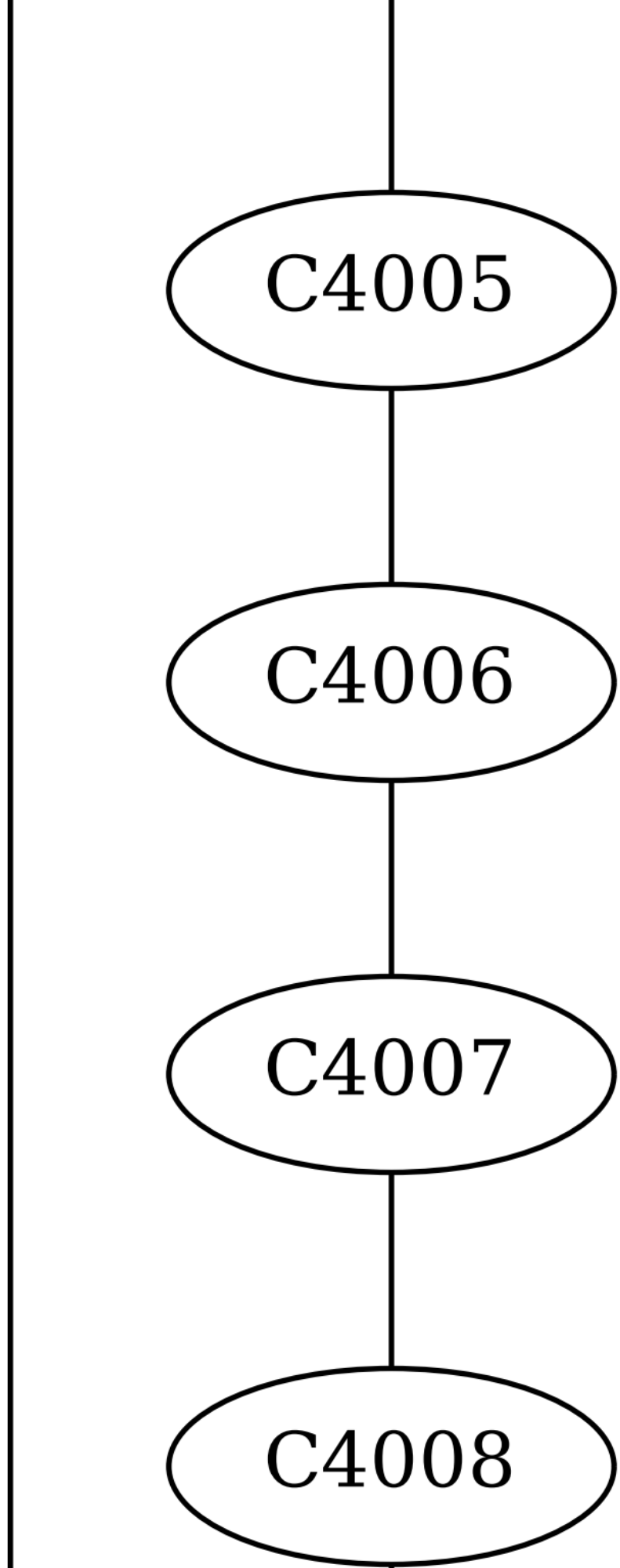
C4005
C4006
C4007
C4008

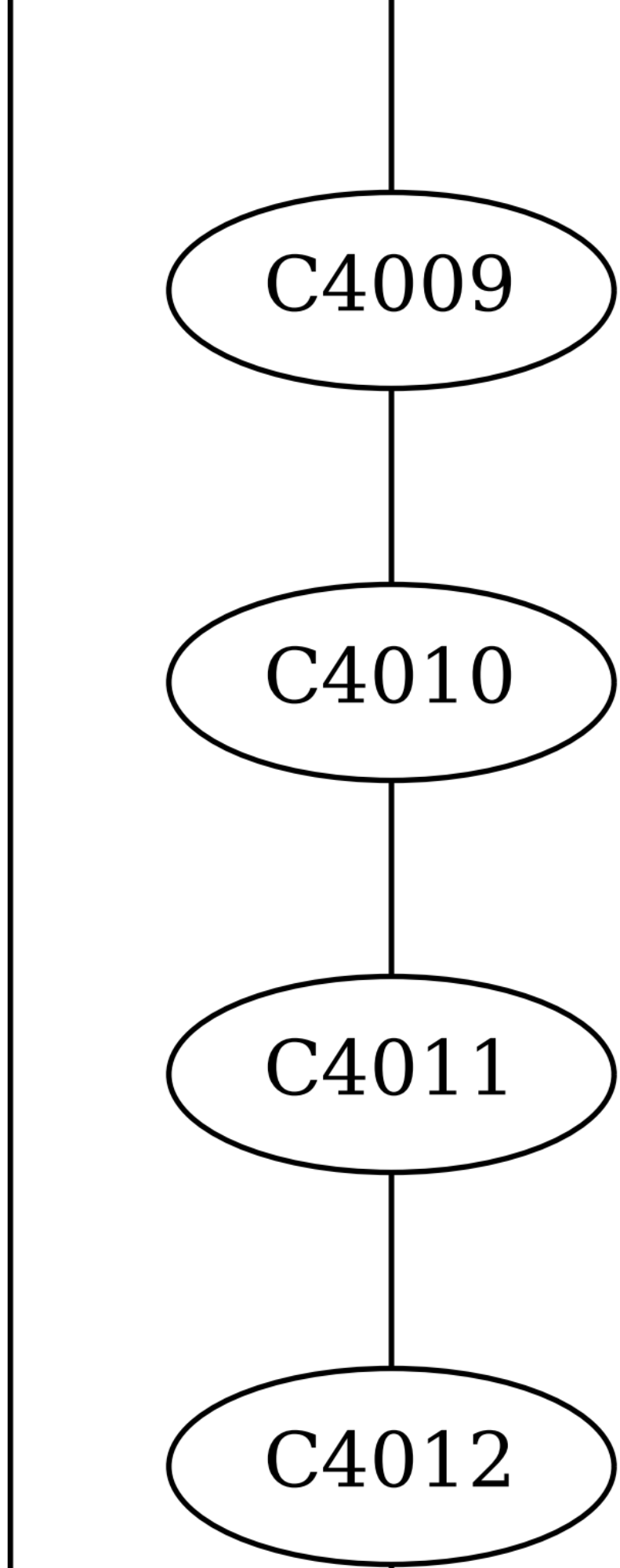
C4009
C4010
C4011
C4012

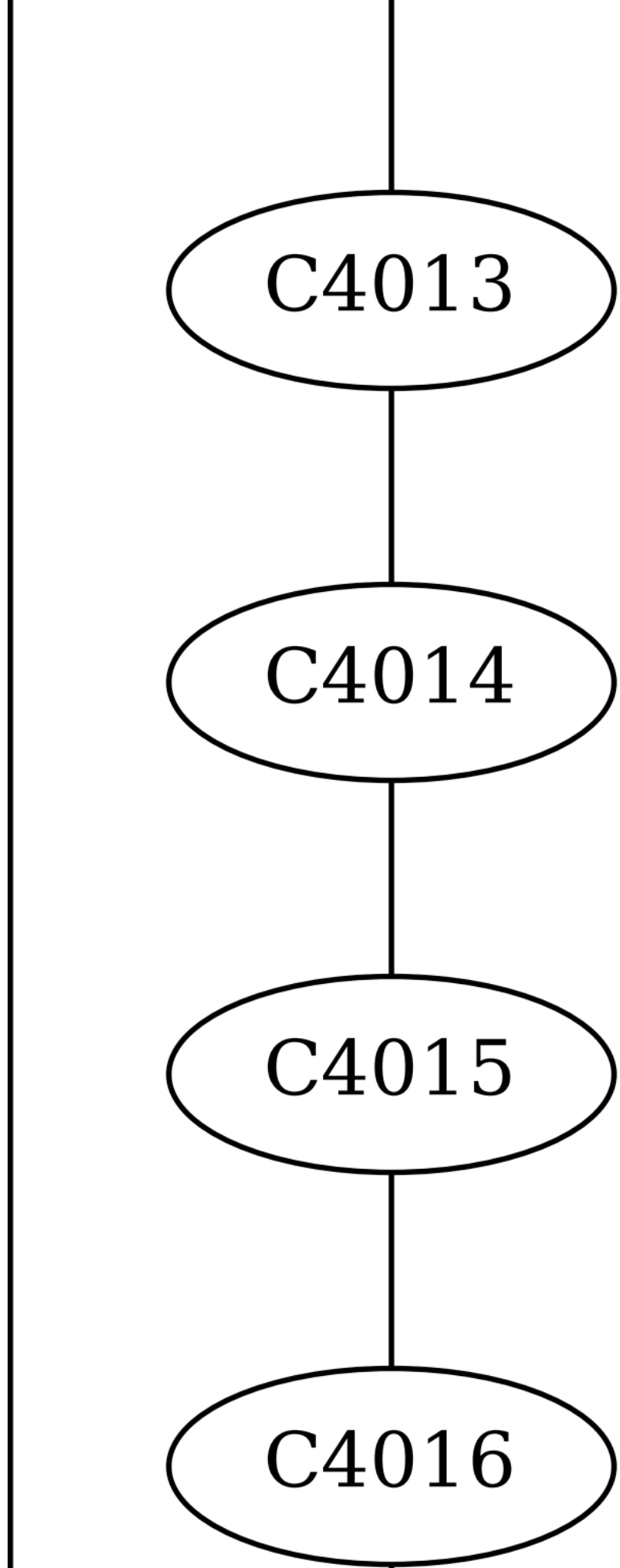
C4013
C4014
C4015
C4016

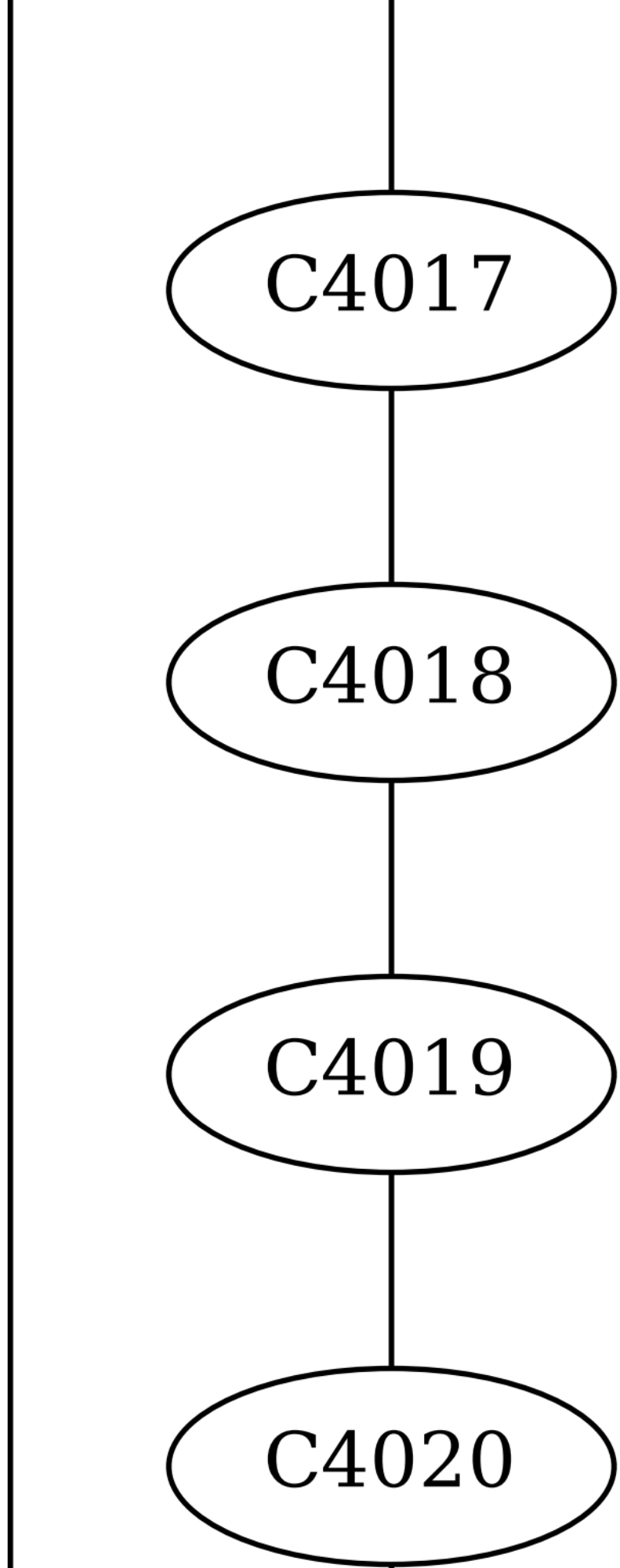
C4017
C4018
C4019
C4020

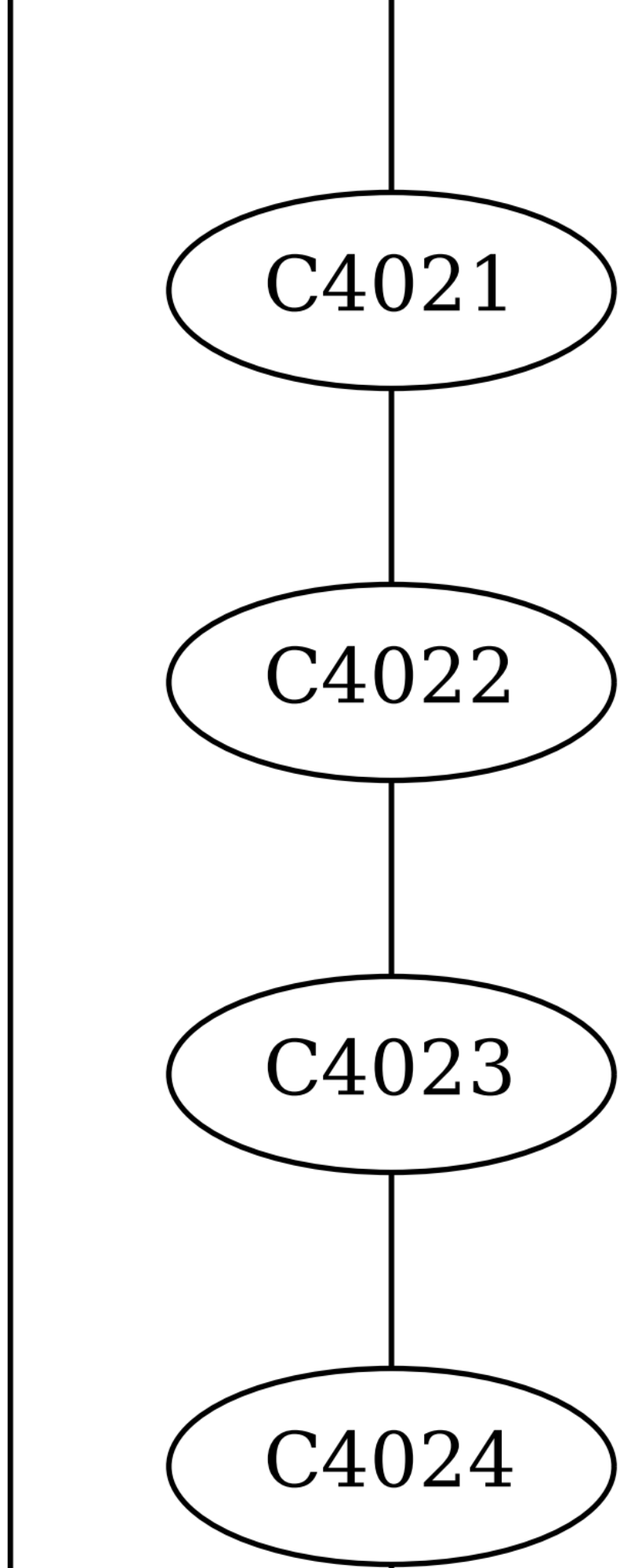
C4021
C4022
C4023
C4024

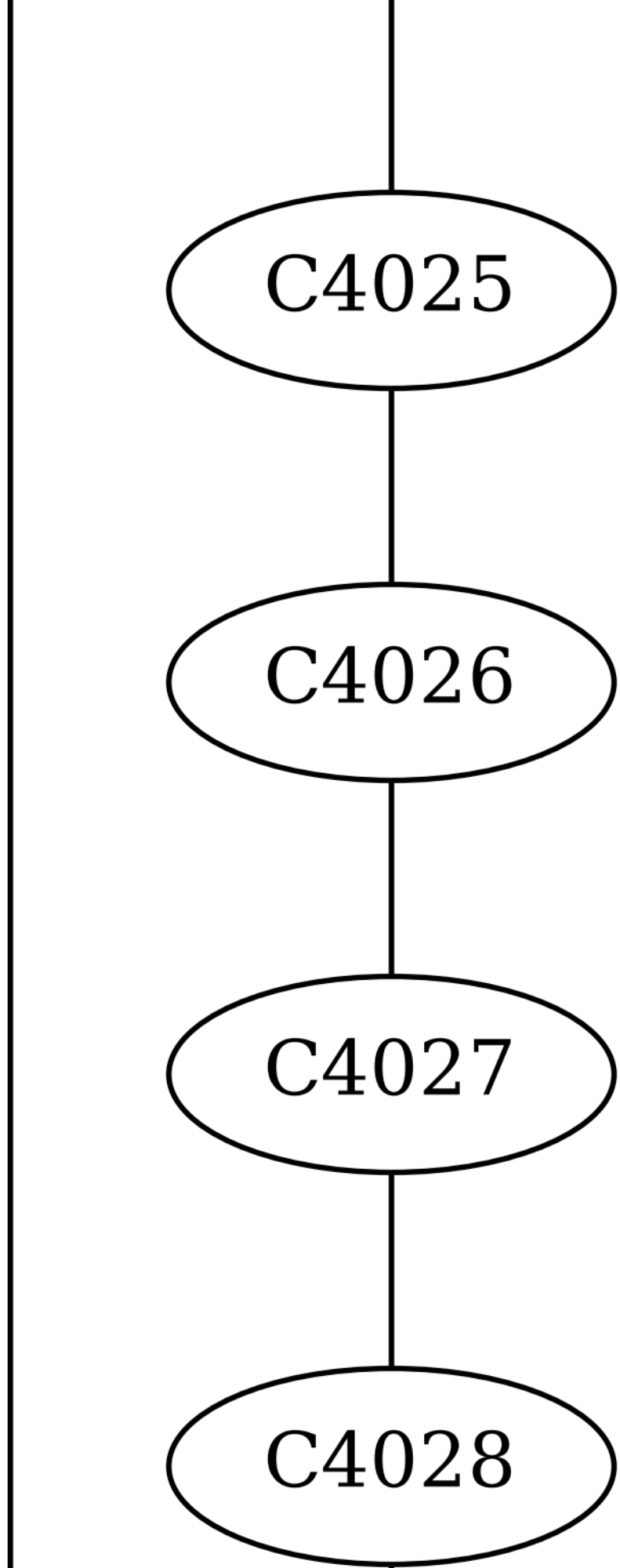
C4025
C4026
C4027
C4028

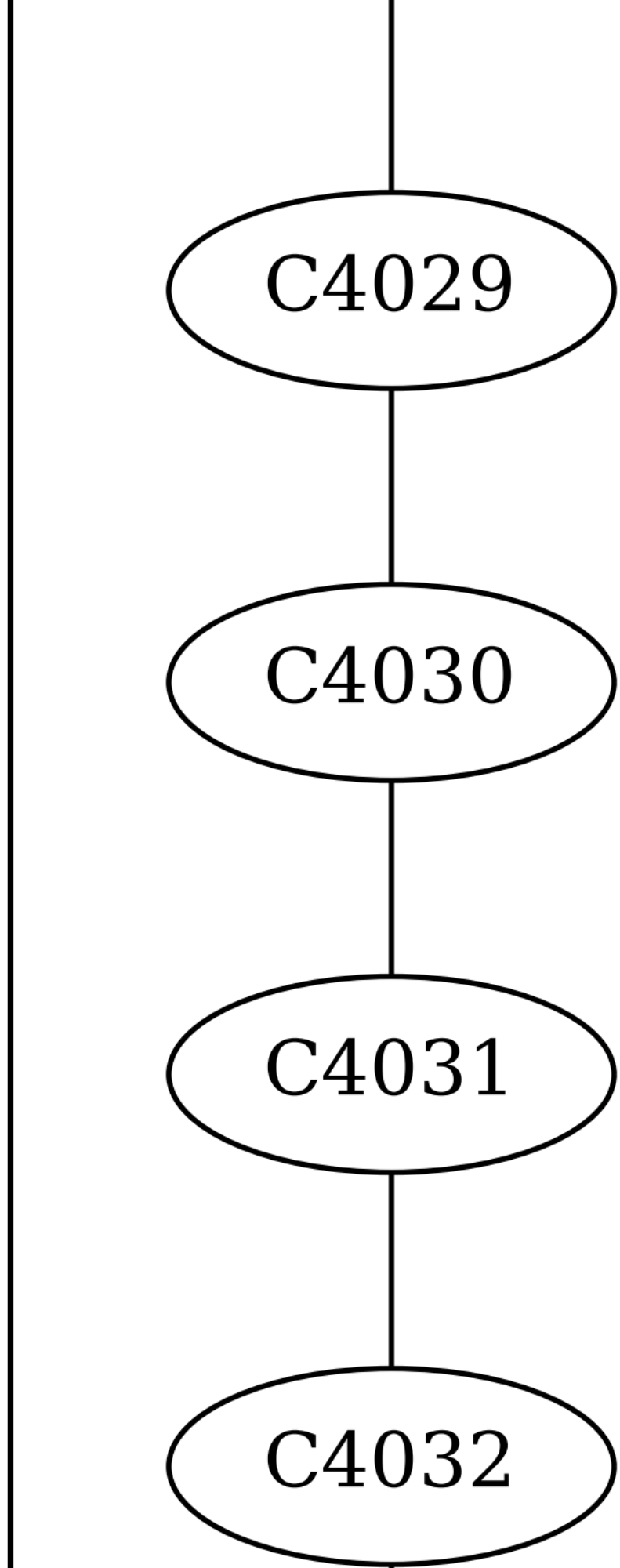
C4029
C4030
C4031
C4032

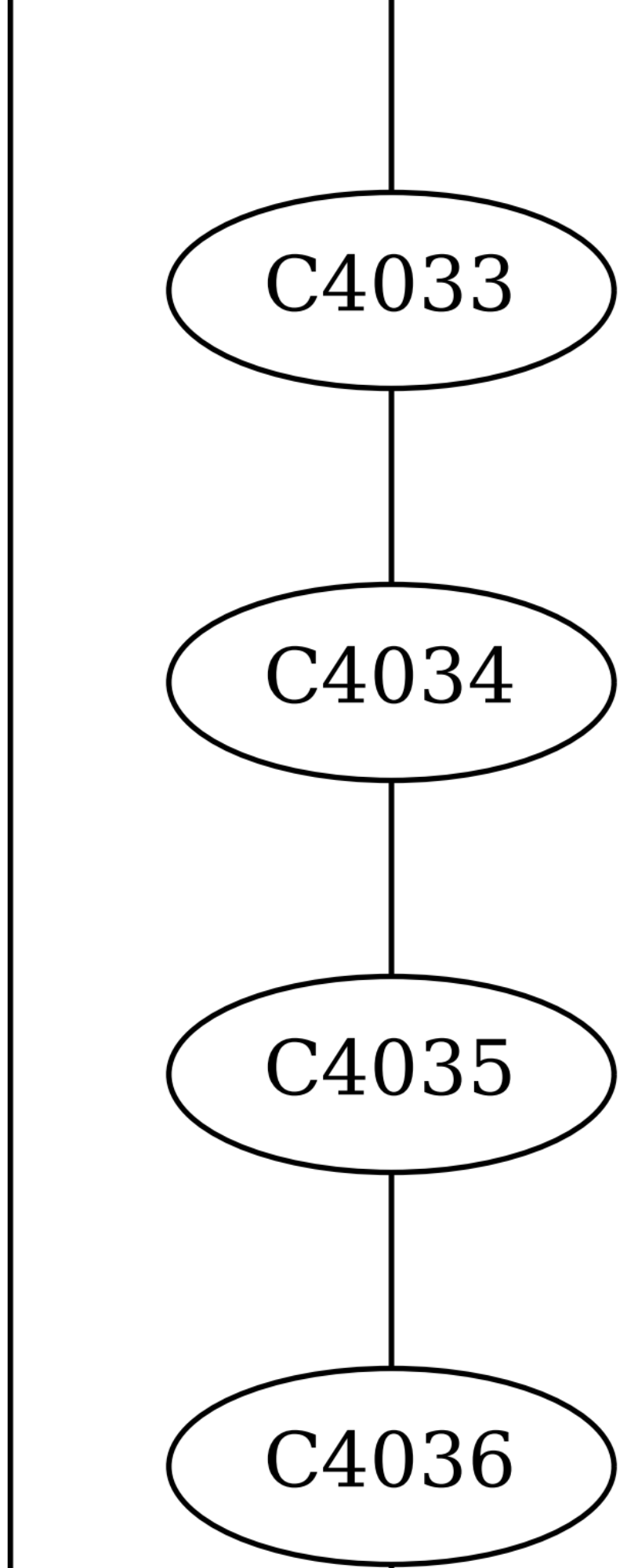
C4033
C4034
C4035
C4036

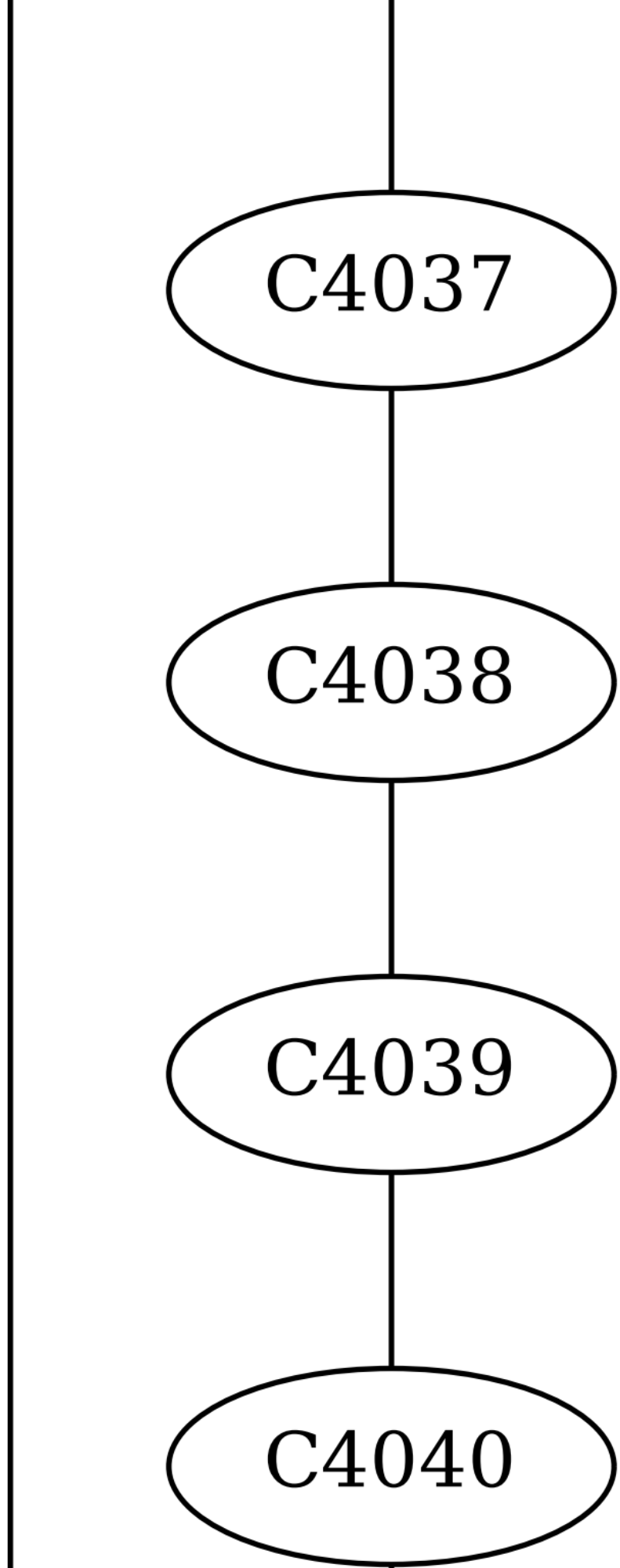
C4037
C4038
C4039
C4040

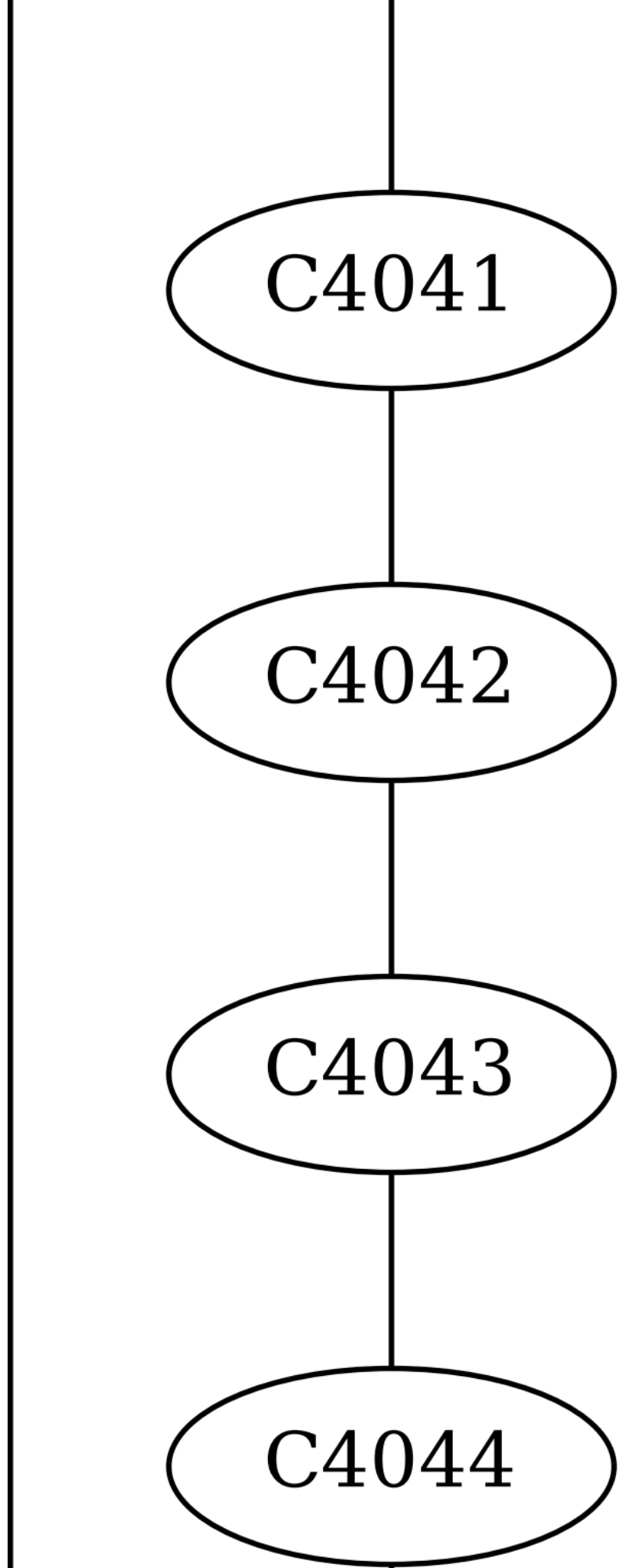
C4041
C4042
C4043
C4044

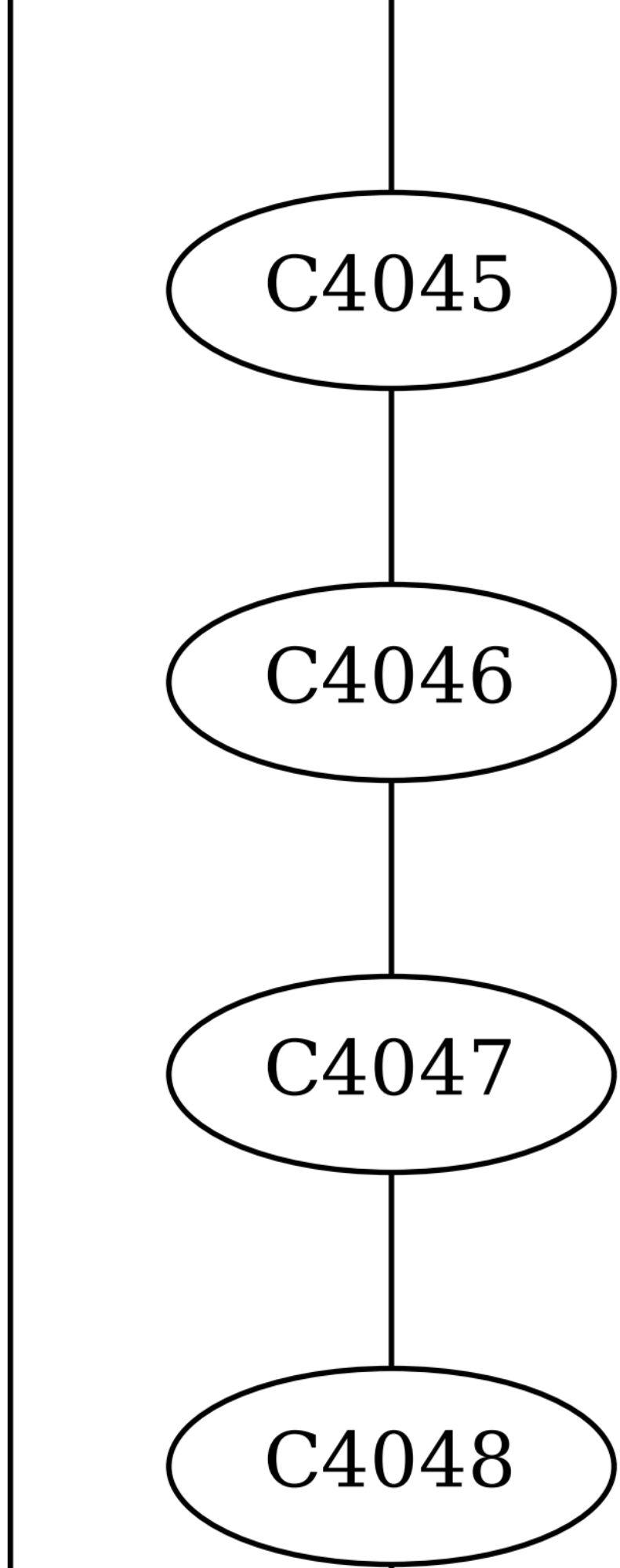
C4045
C4046
C4047
C4048

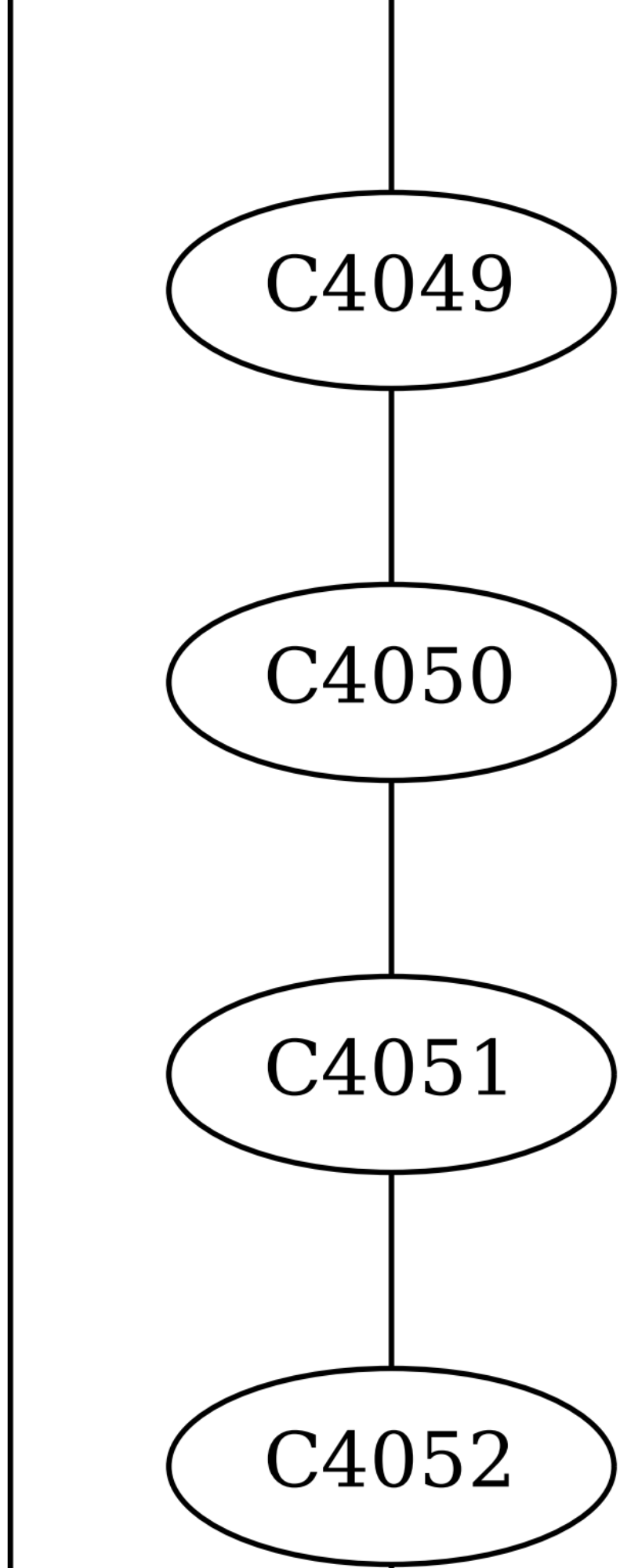
C4049
C4050
C4051
C4052

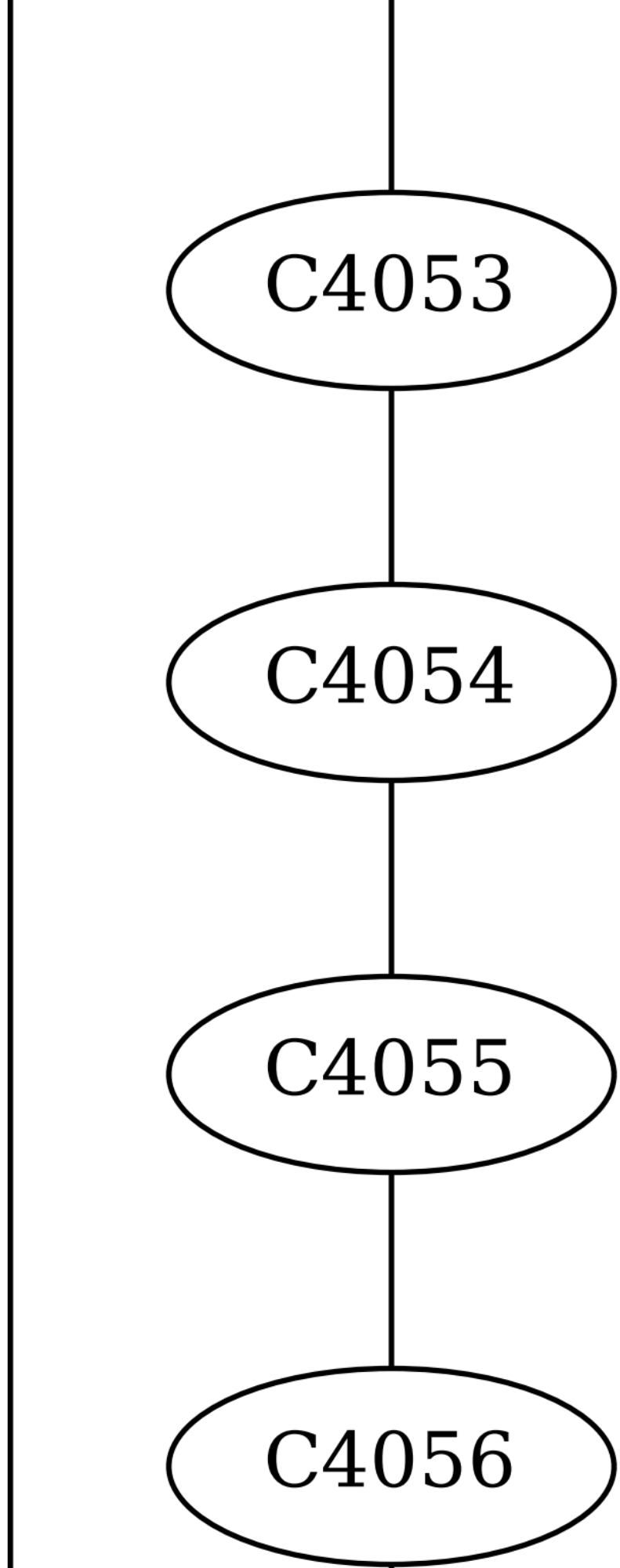
C4053
C4054
C4055
C4056

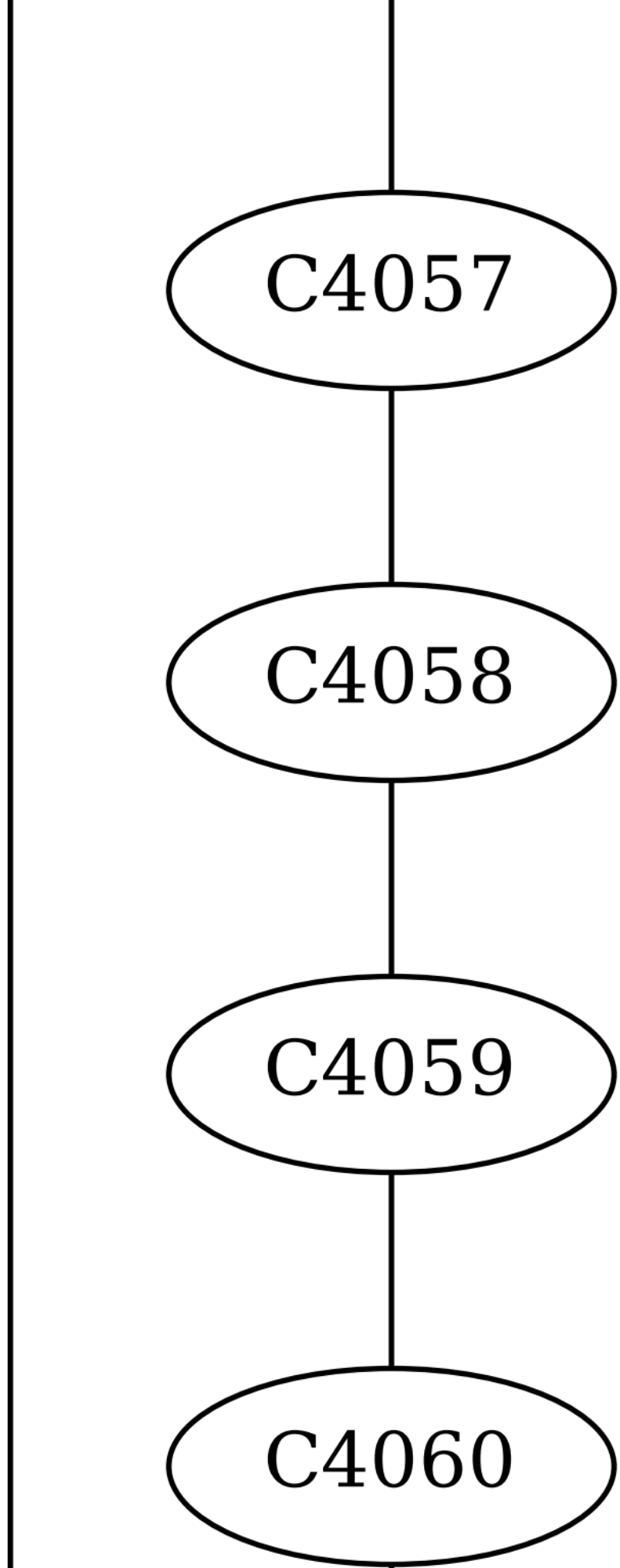
C4057
C4058
C4059
C4060

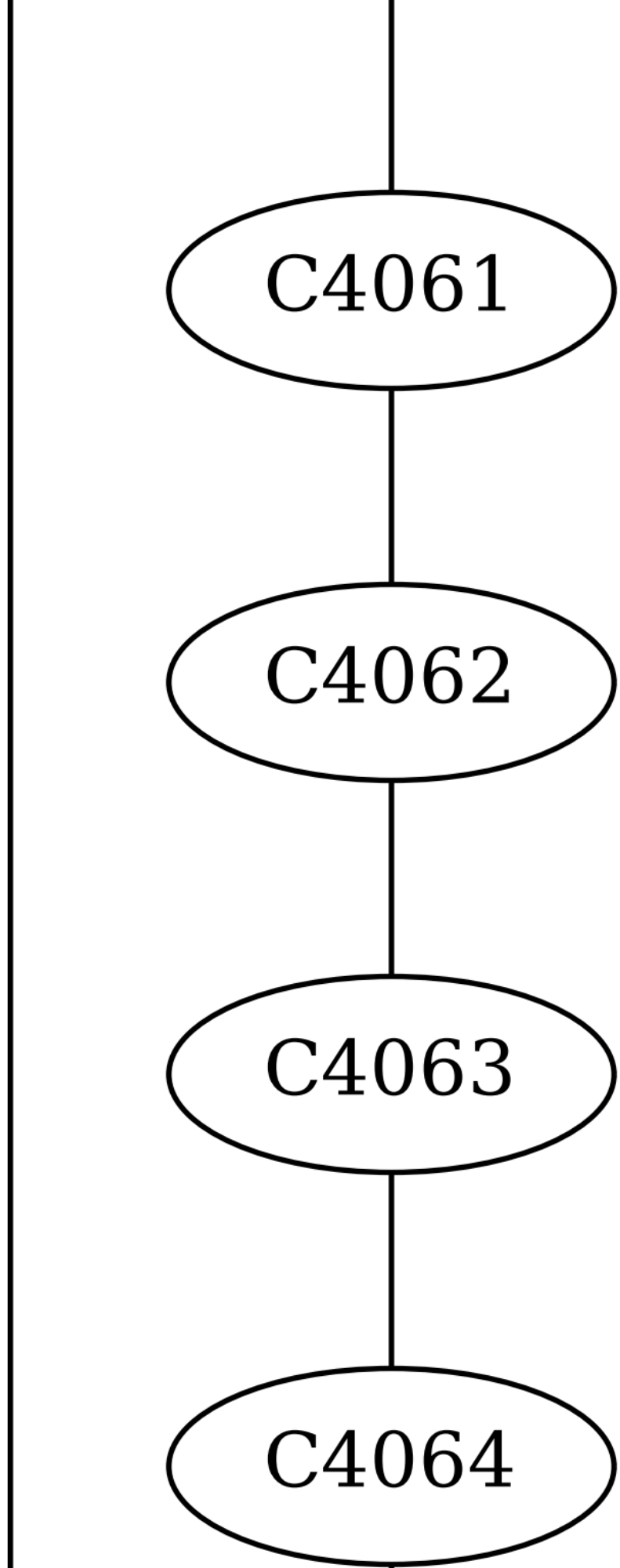
C4061
C4062
C4063
C4064

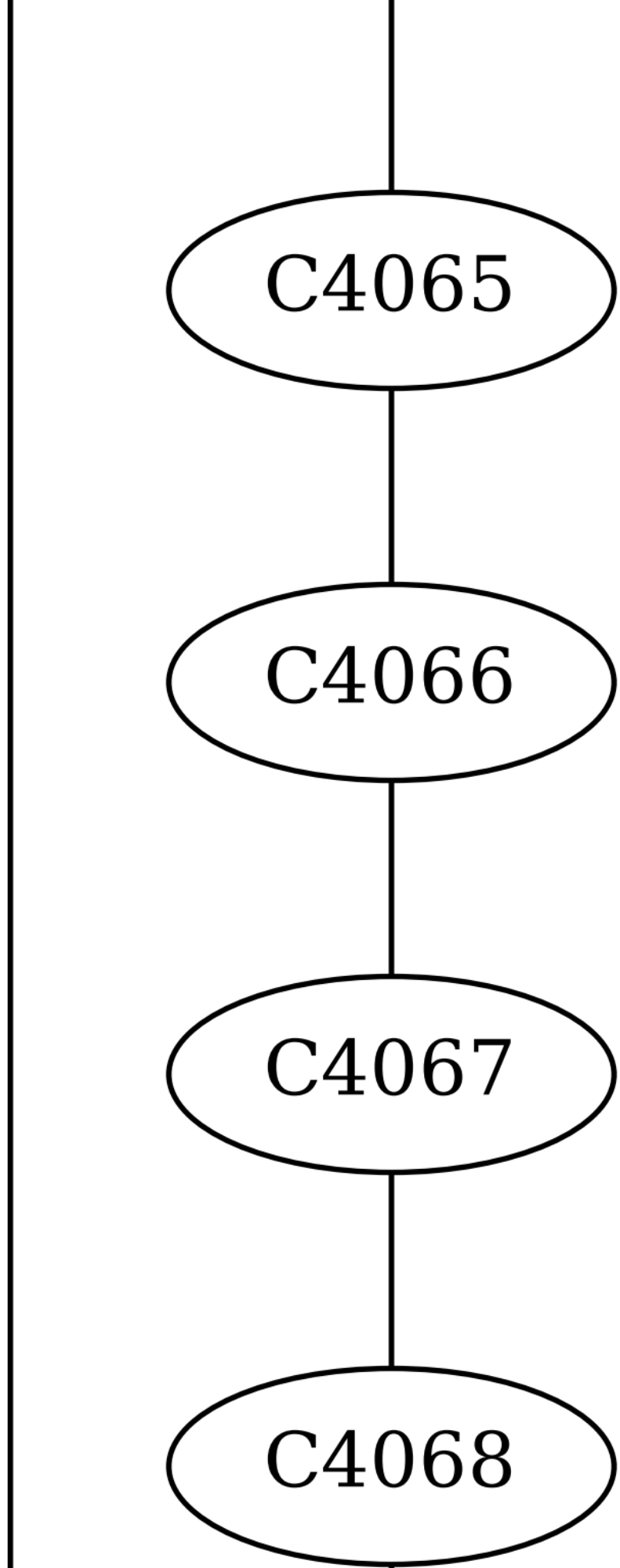
C4065
C4066
C4067
C4068

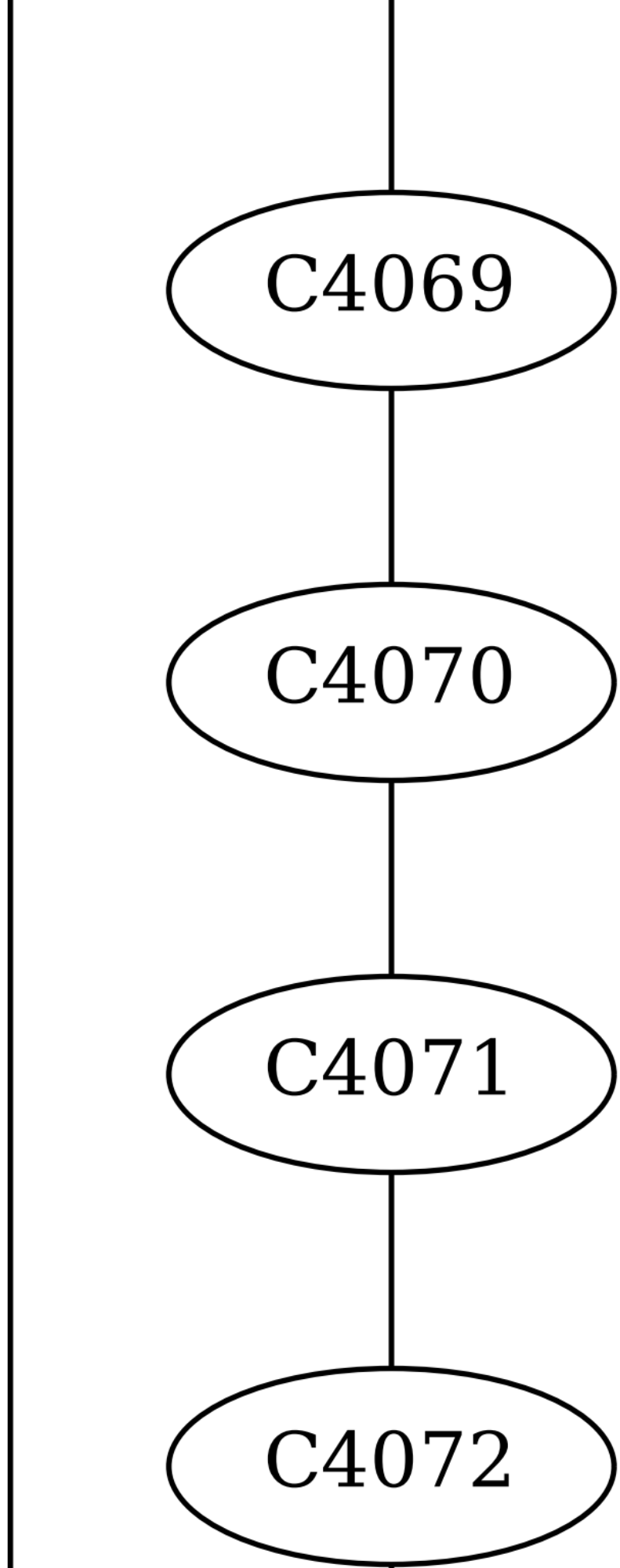
C4069
C4070
C4071
C4072

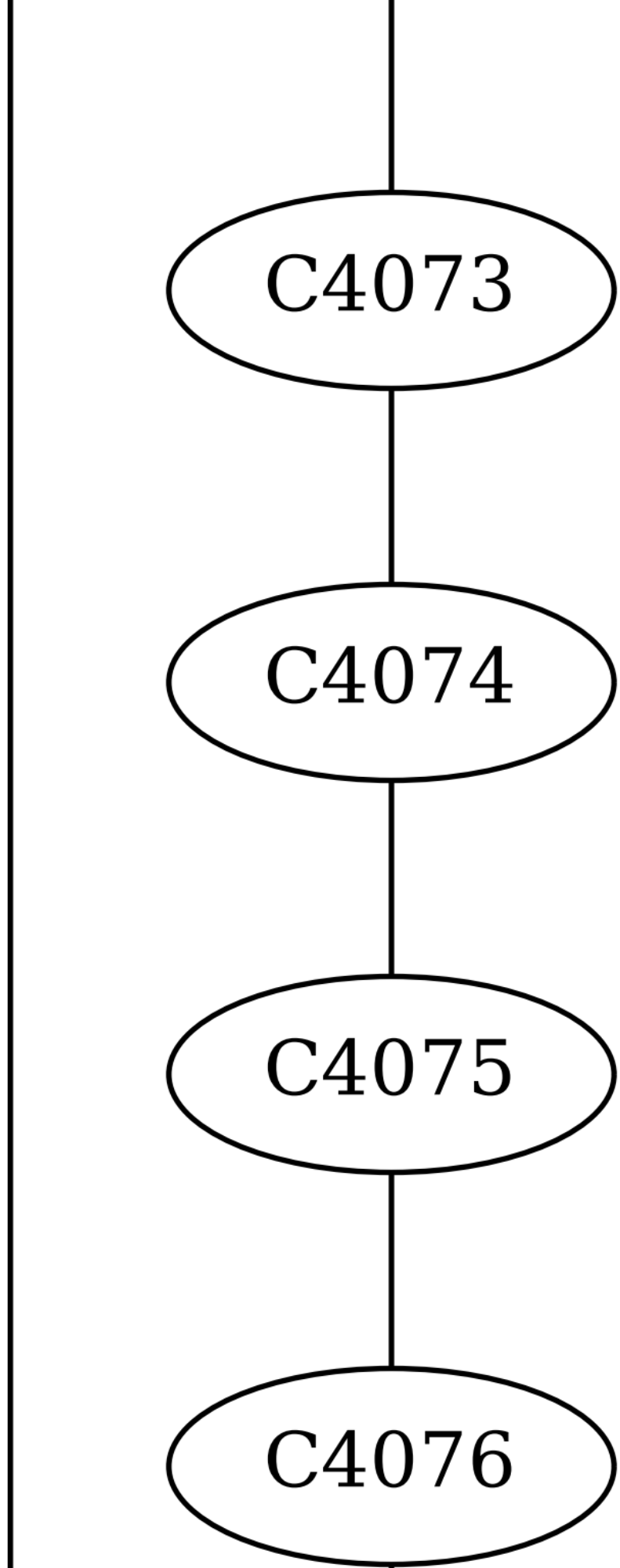
C4073
C4074
C4075
C4076

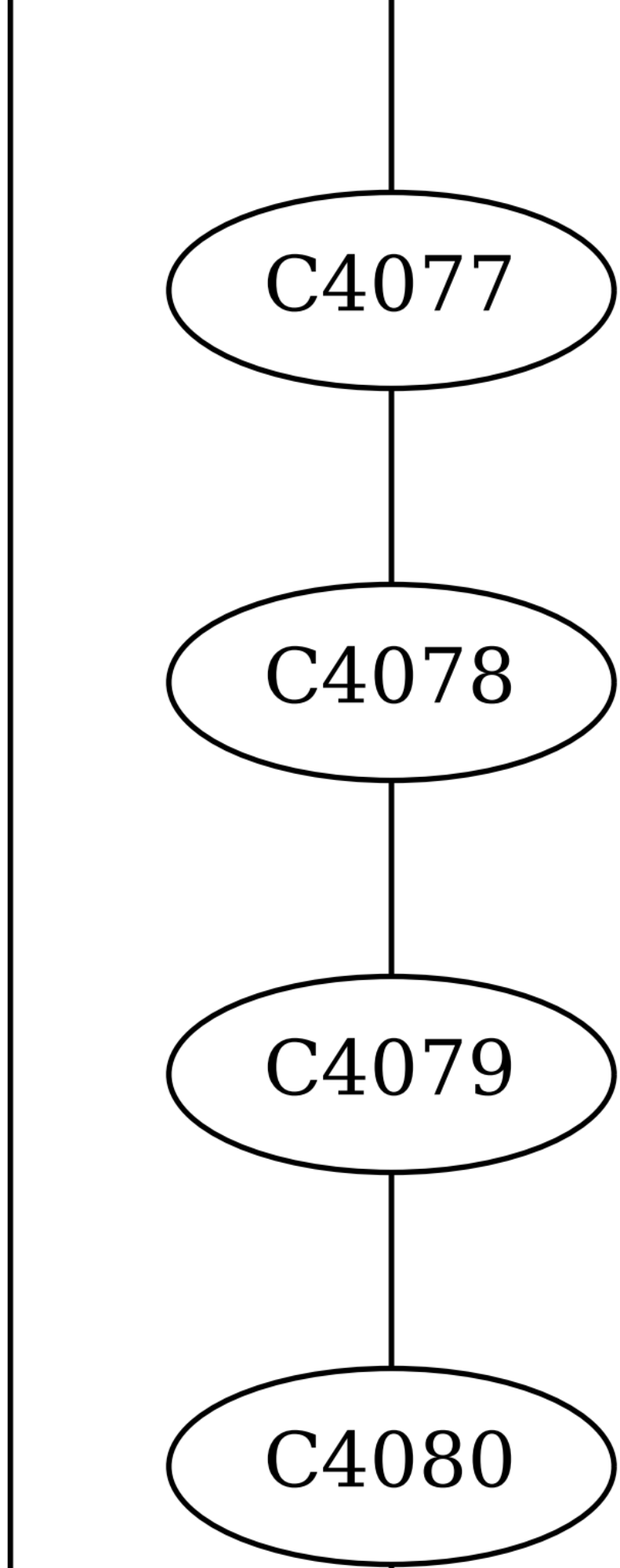
C4077
C4078
C4079
C4080

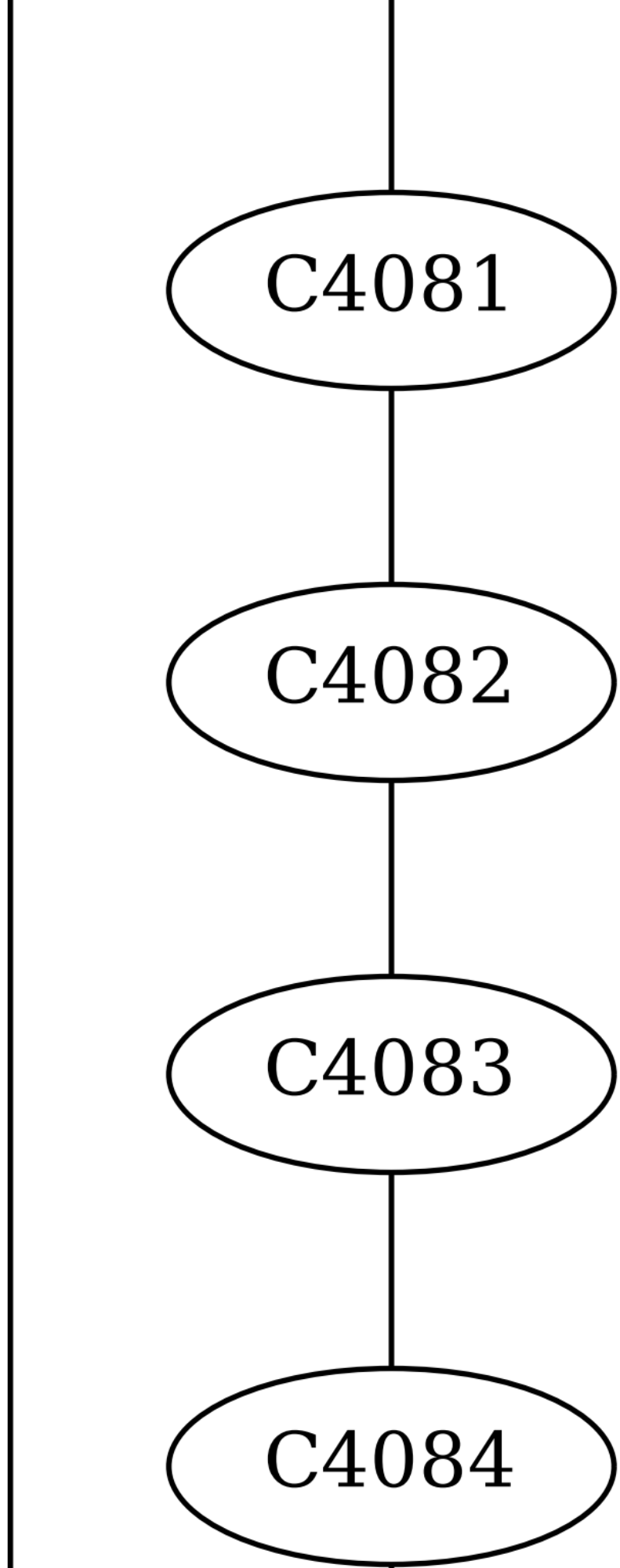
C4081
C4082
C4083
C4084

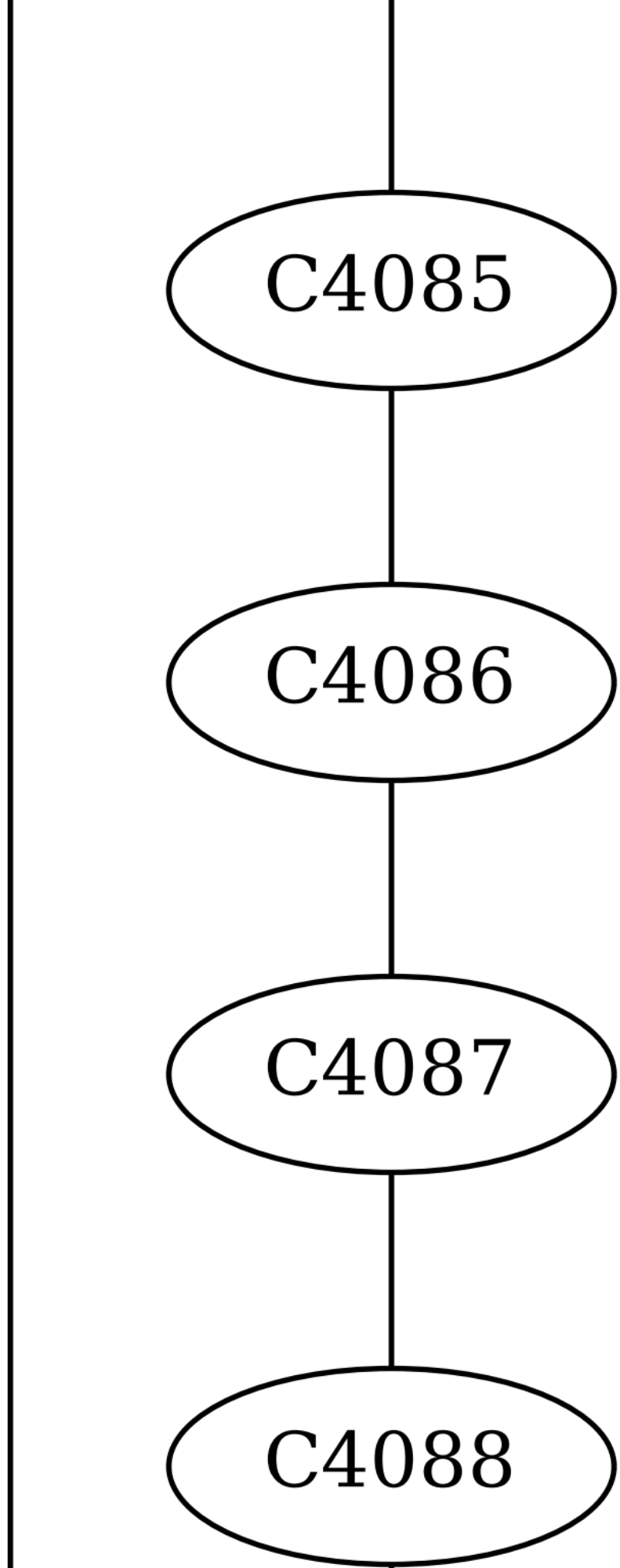
C4085
C4086
C4087
C4088

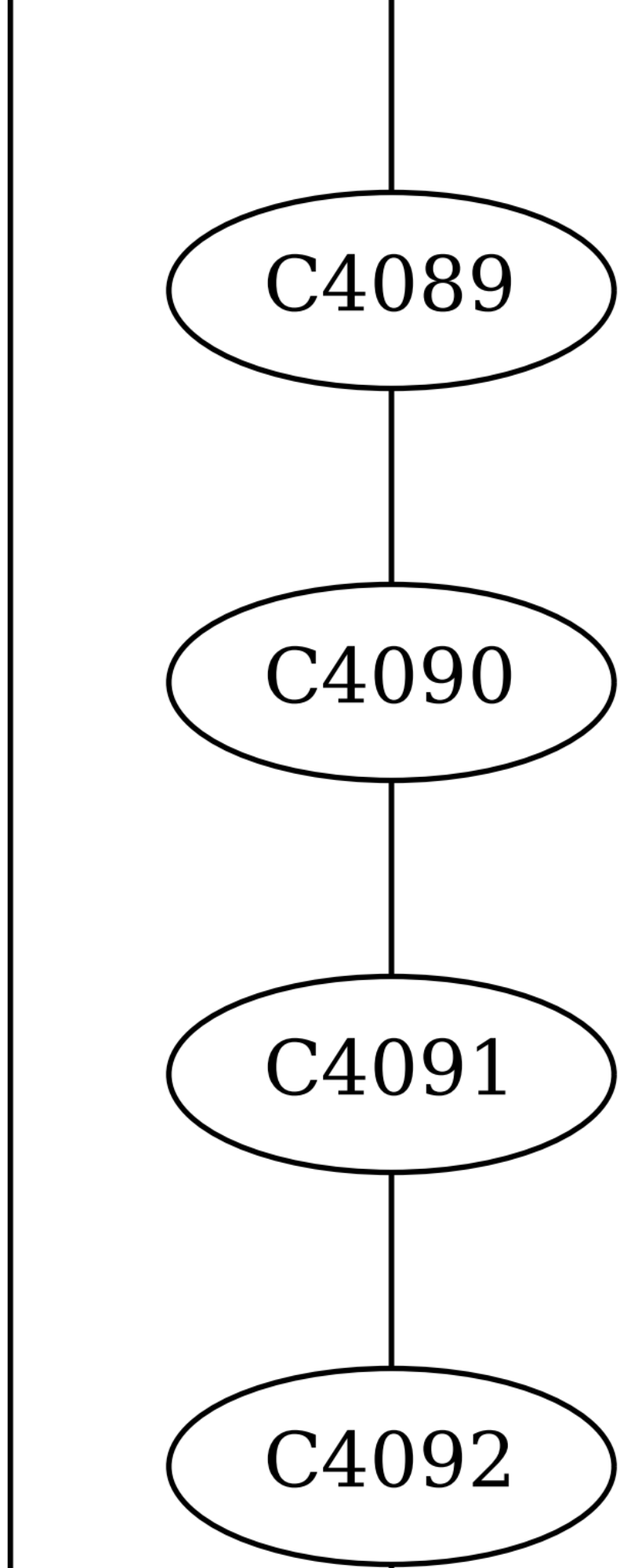
C4089
C4090
C4091
C4092

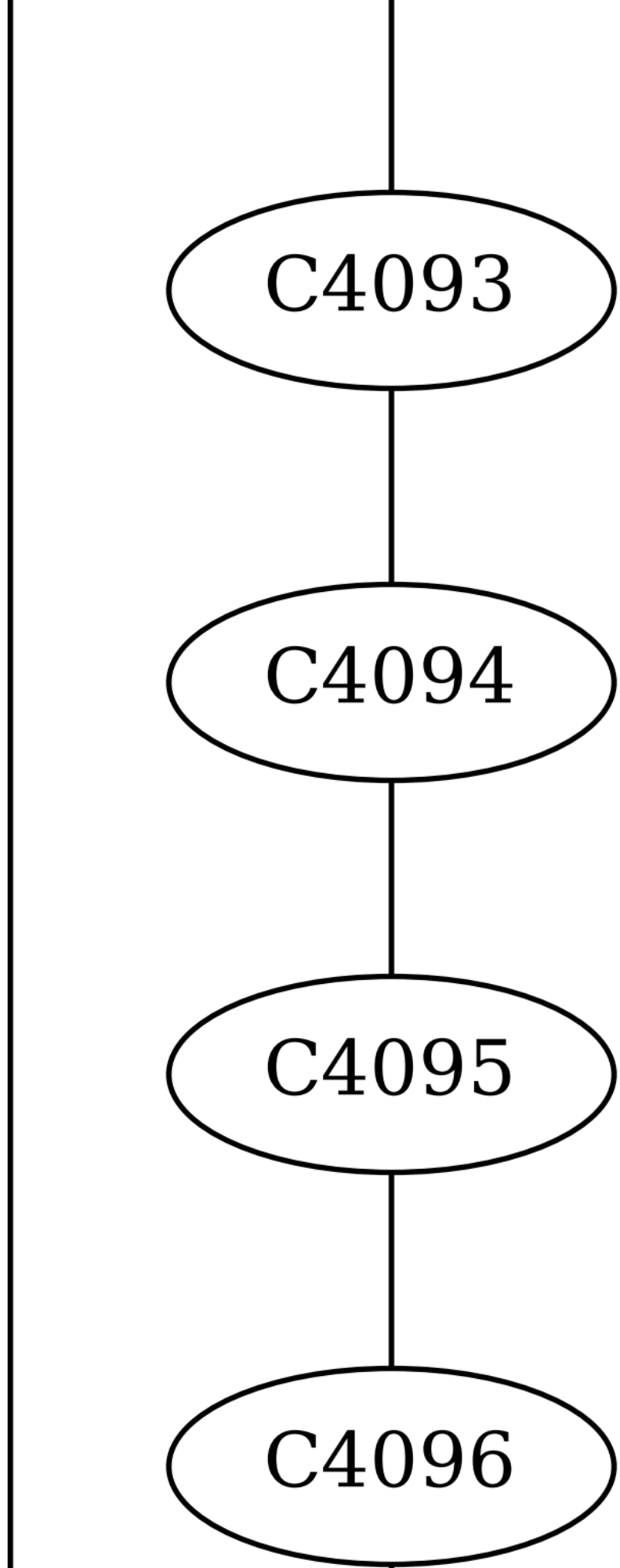
C4093
C4094
C4095
C4096

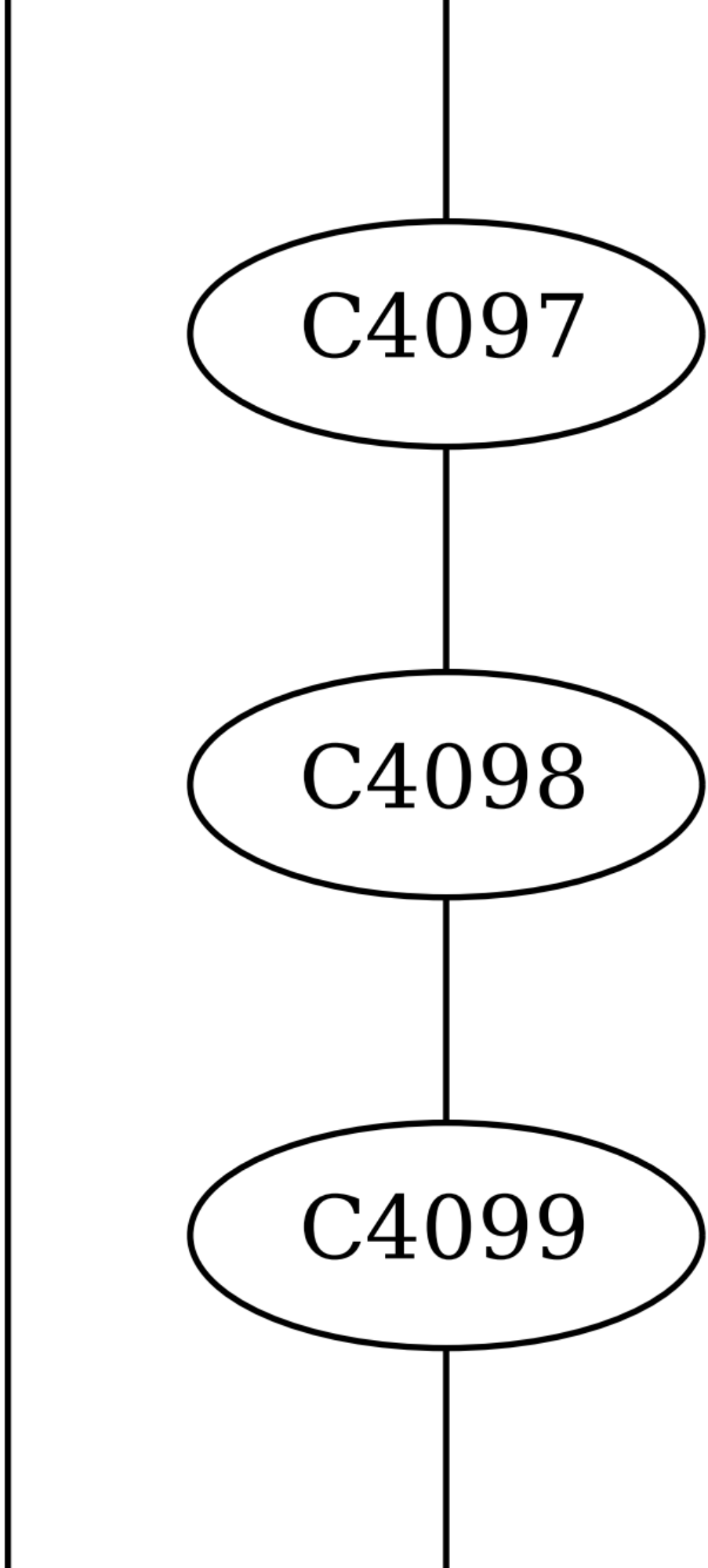
C4097
C4098
C4099

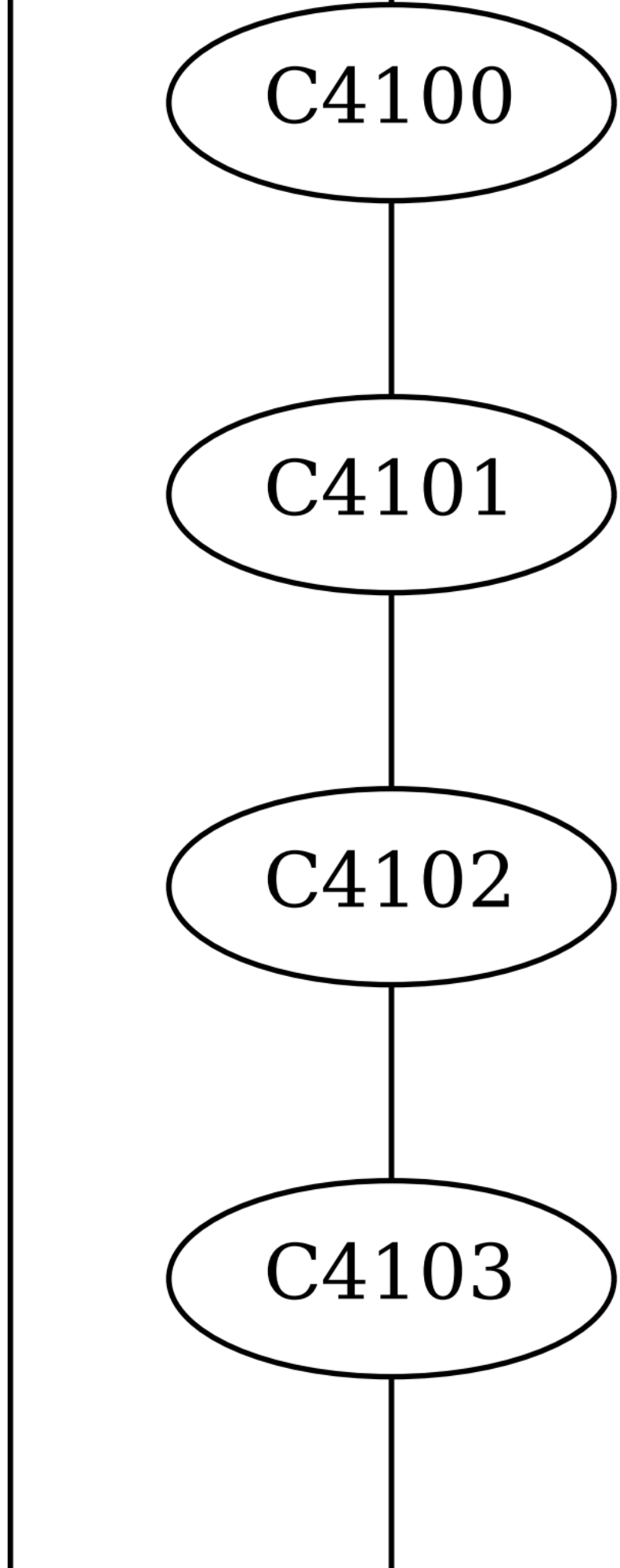
C4100
C4101
C4102
C4103

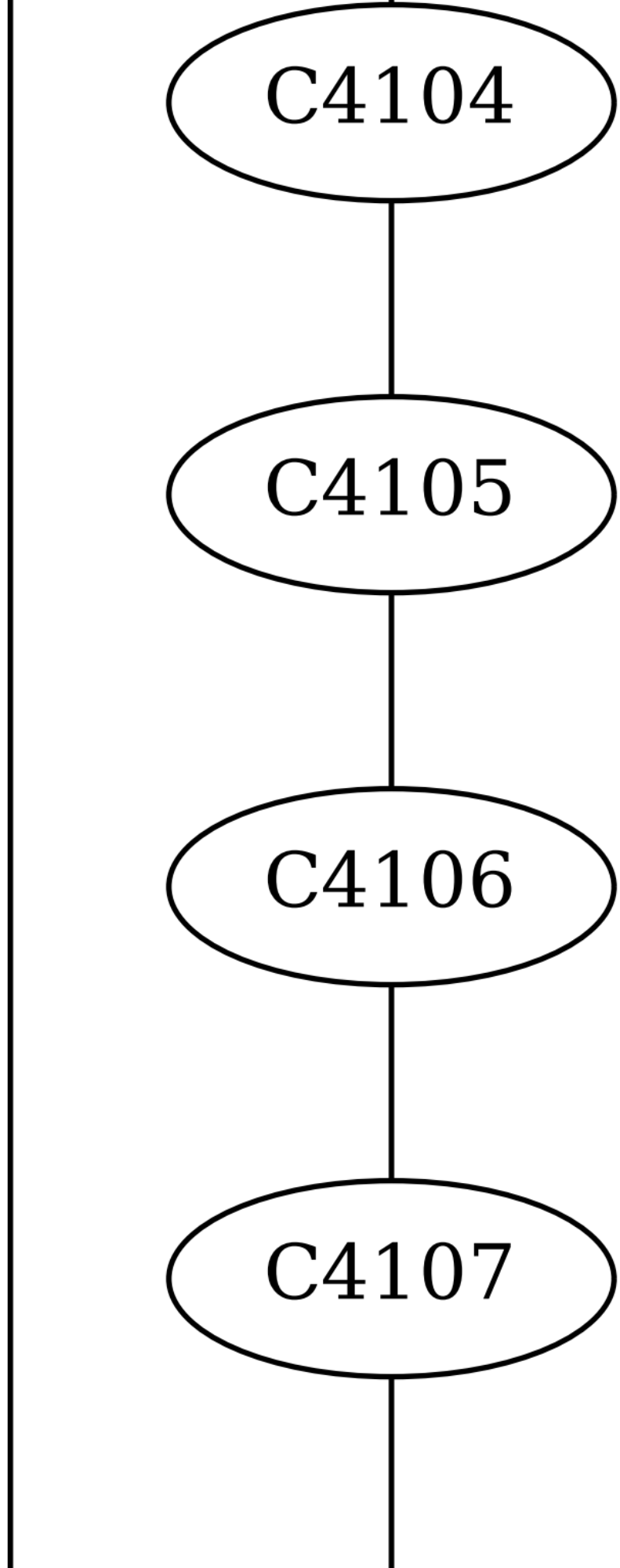
C4104
C4105
C4106
C4107

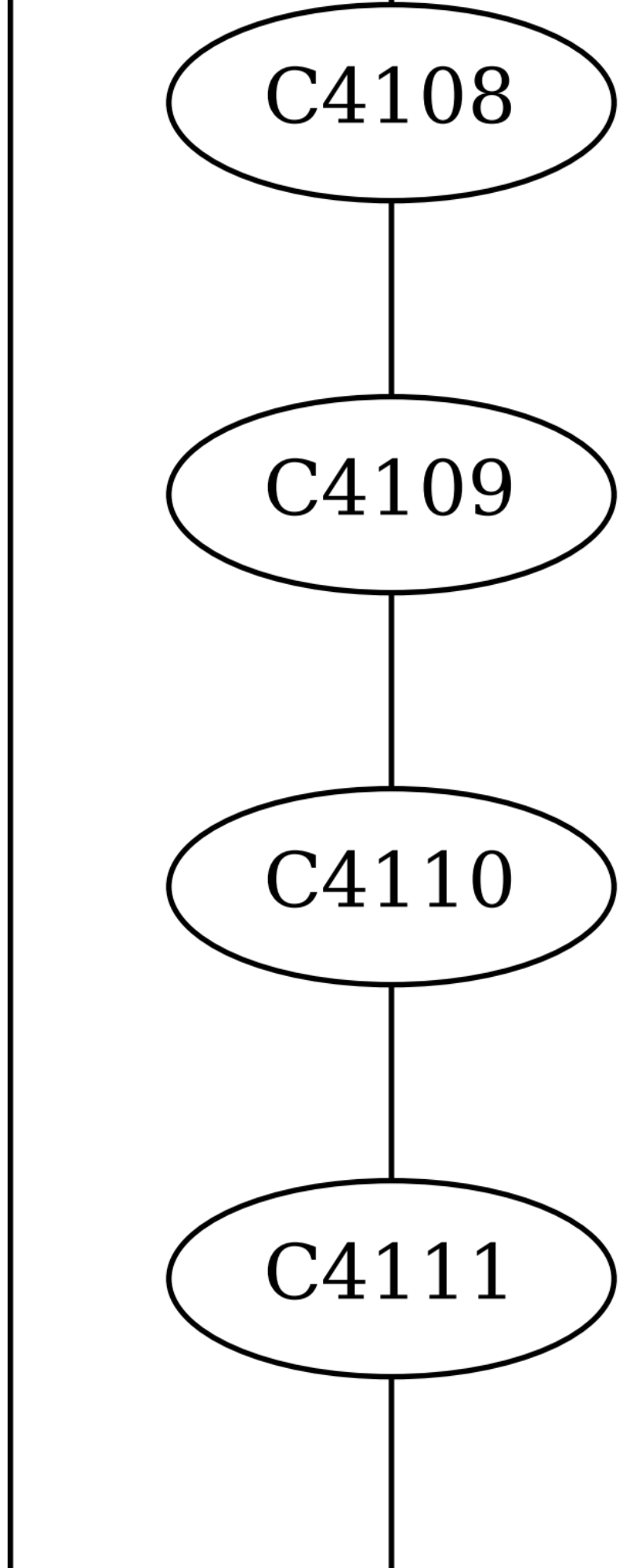
C4108
C4109
C4110
C4111

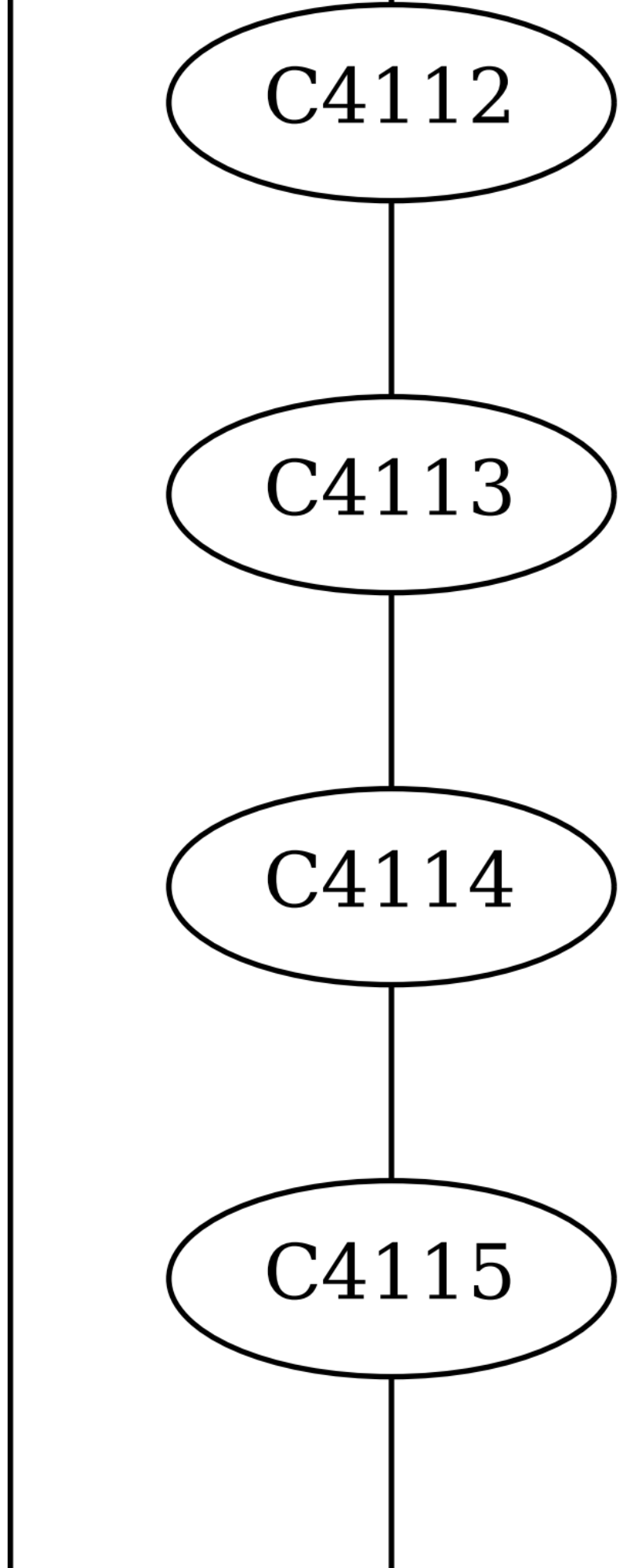
C4112
C4113
C4114
C4115

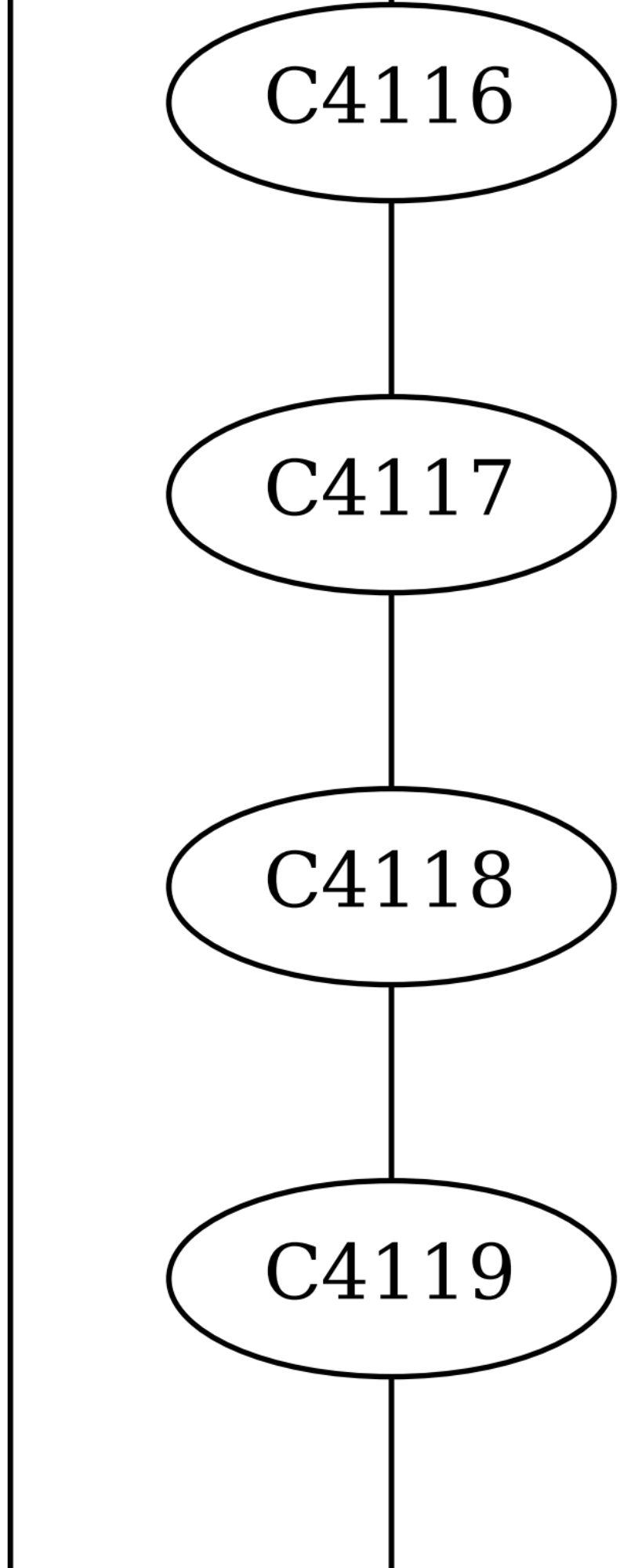
C4116
C4117
C4118
C4119

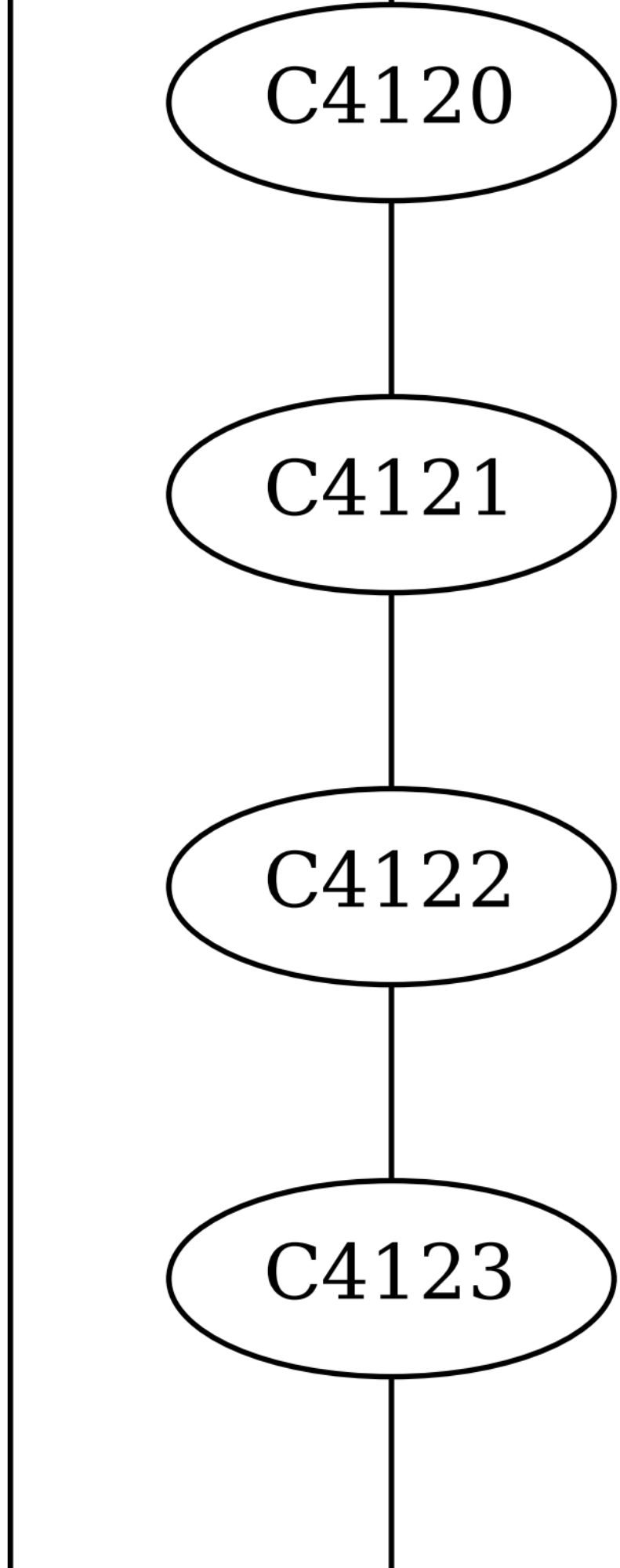
C4120
C4121
C4122
C4123

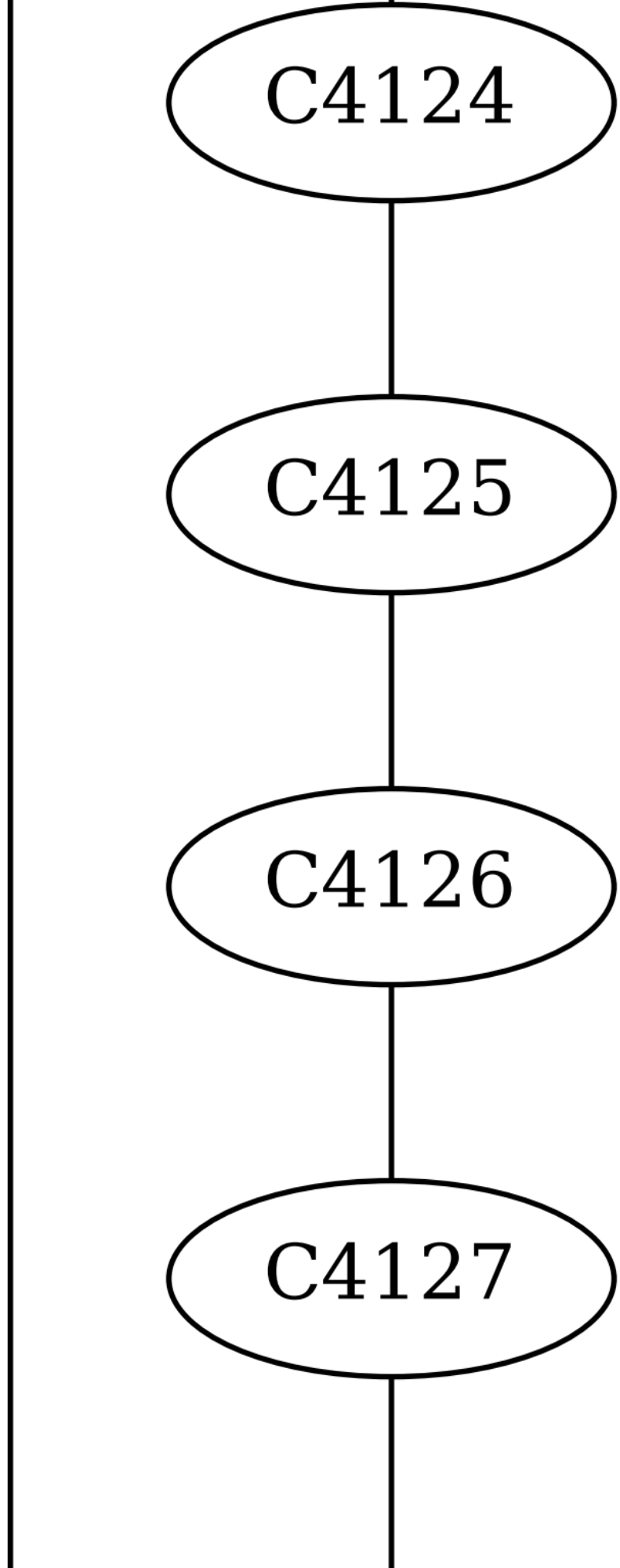
C4124
C4125
C4126
C4127

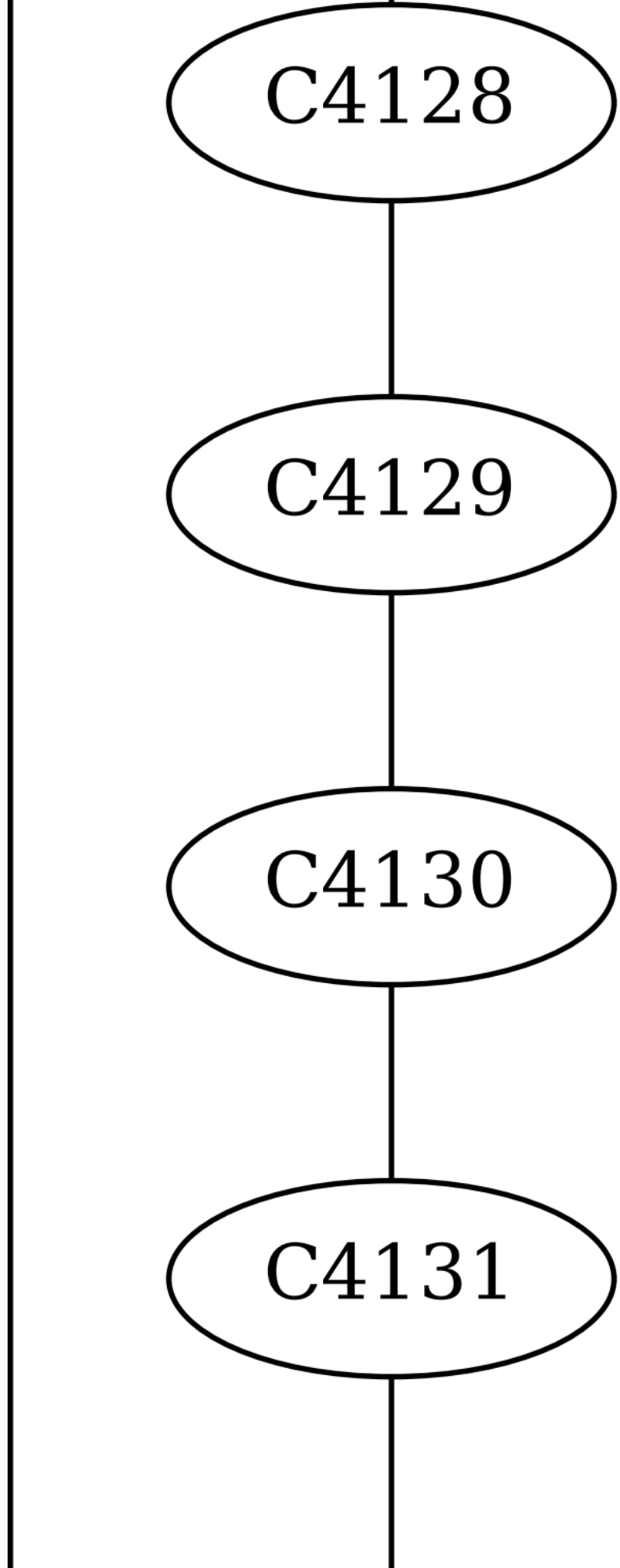
C4128
C4129
C4130
C4131

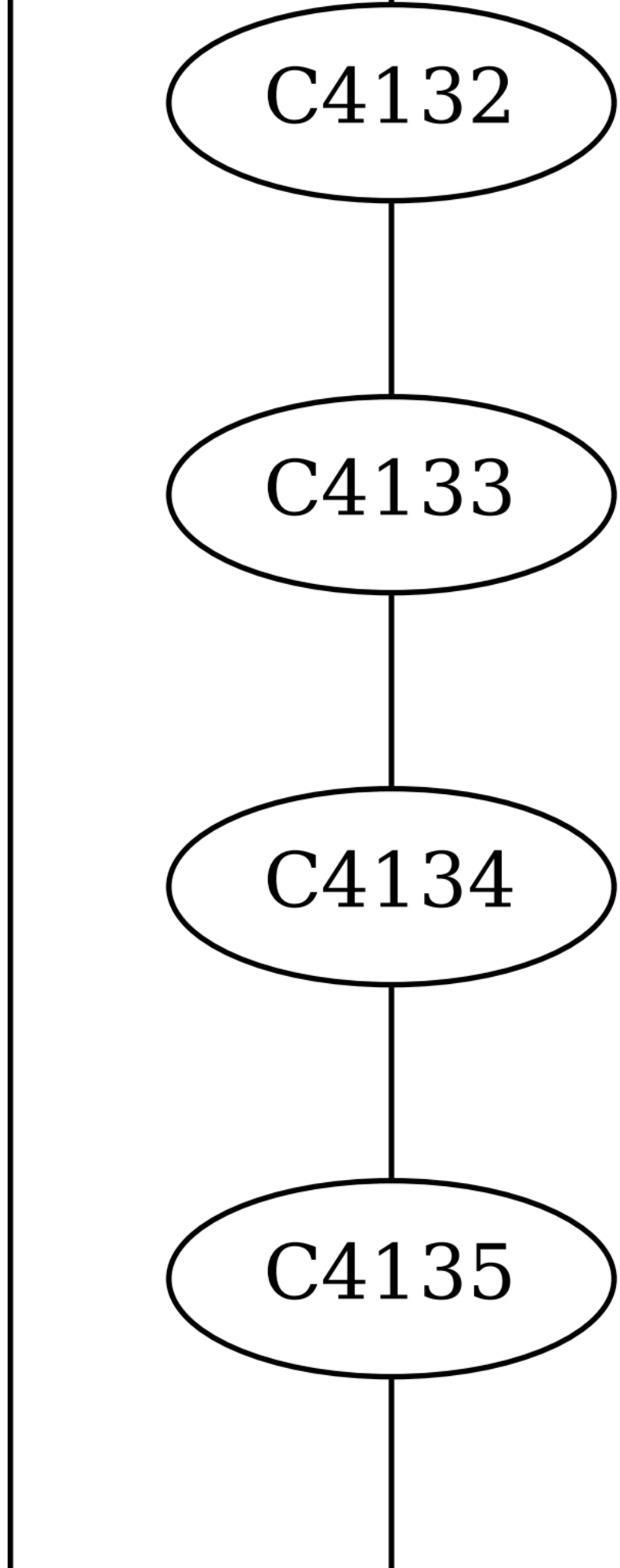
C4132
C4133
C4134
C4135

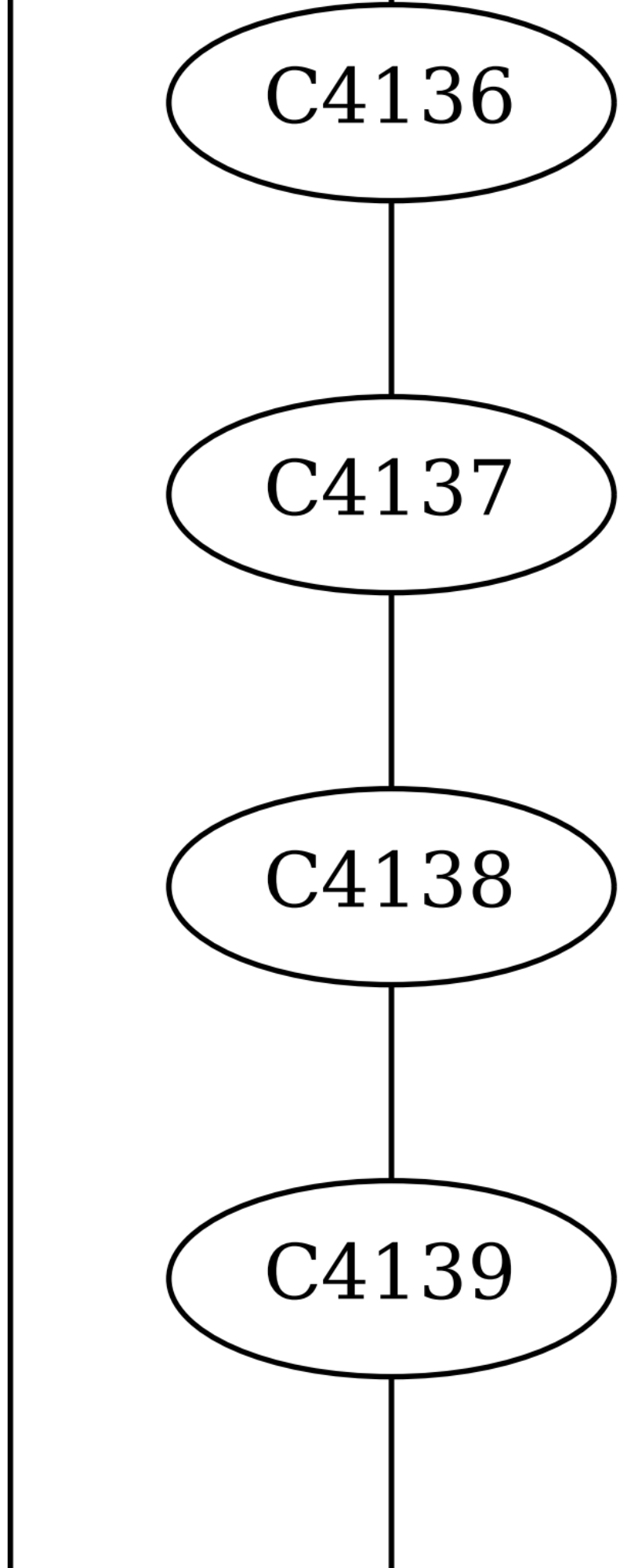
C4136
C4137
C4138
C4139

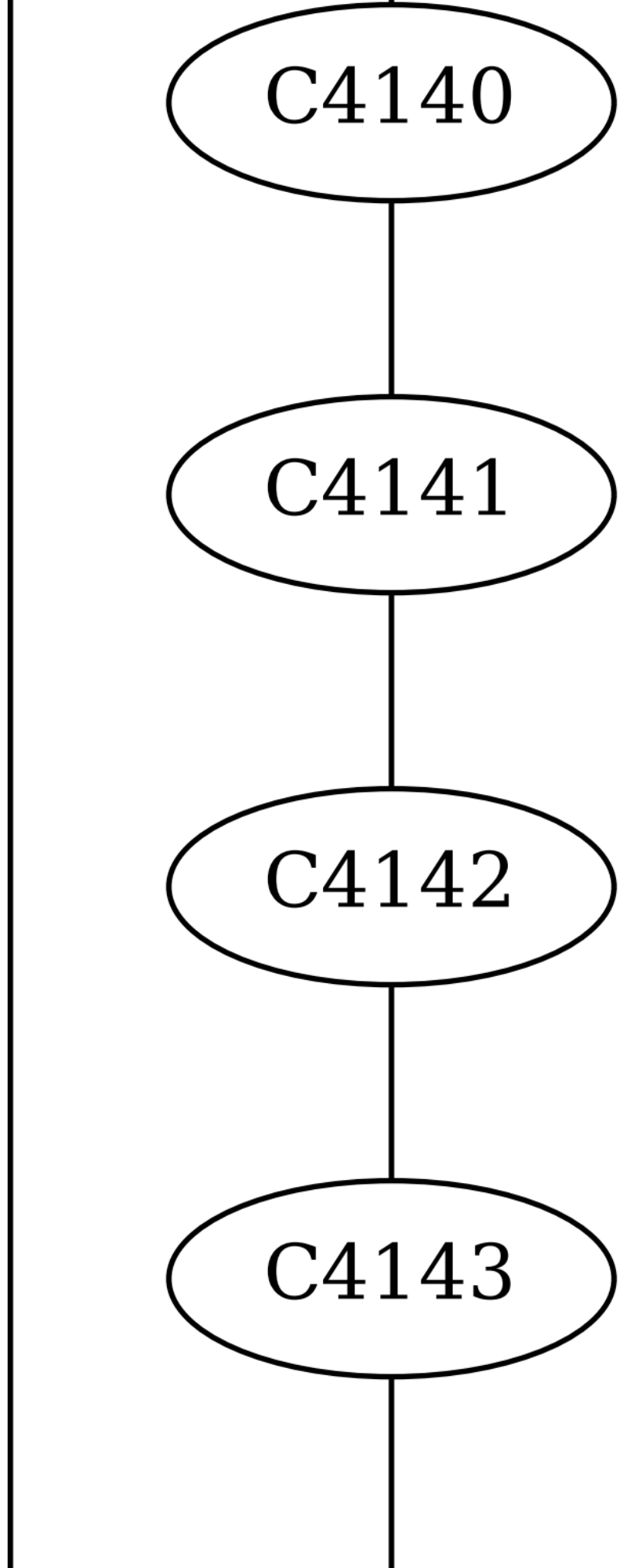
C4140
C4141
C4142
C4143

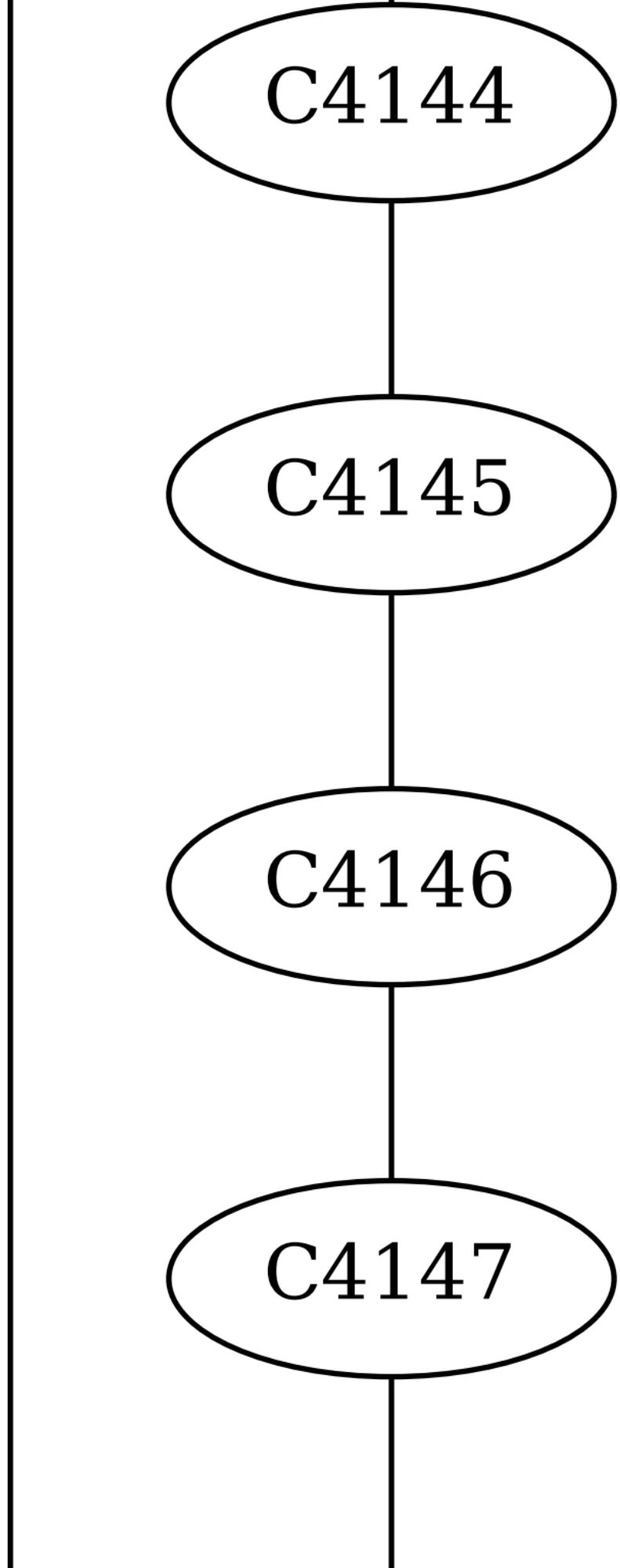
C4144
C4145
C4146
C4147

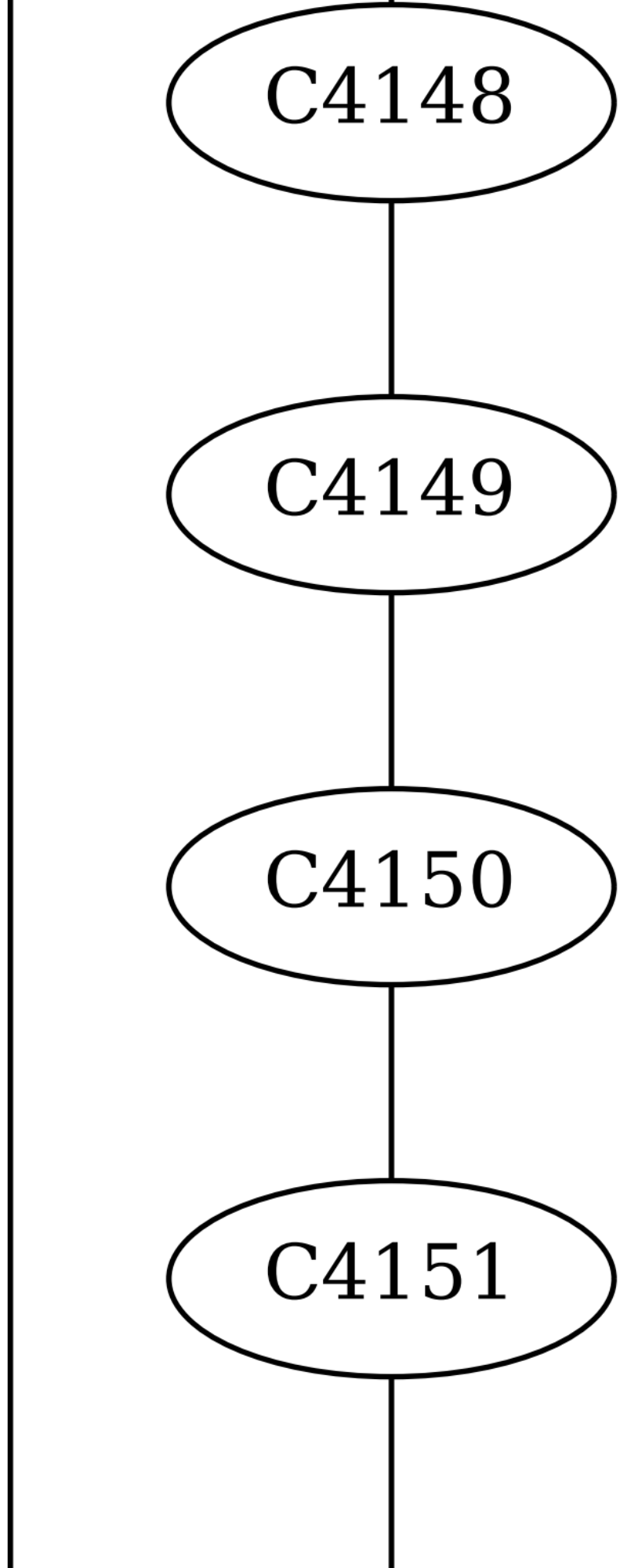
C4148
C4149
C4150
C4151

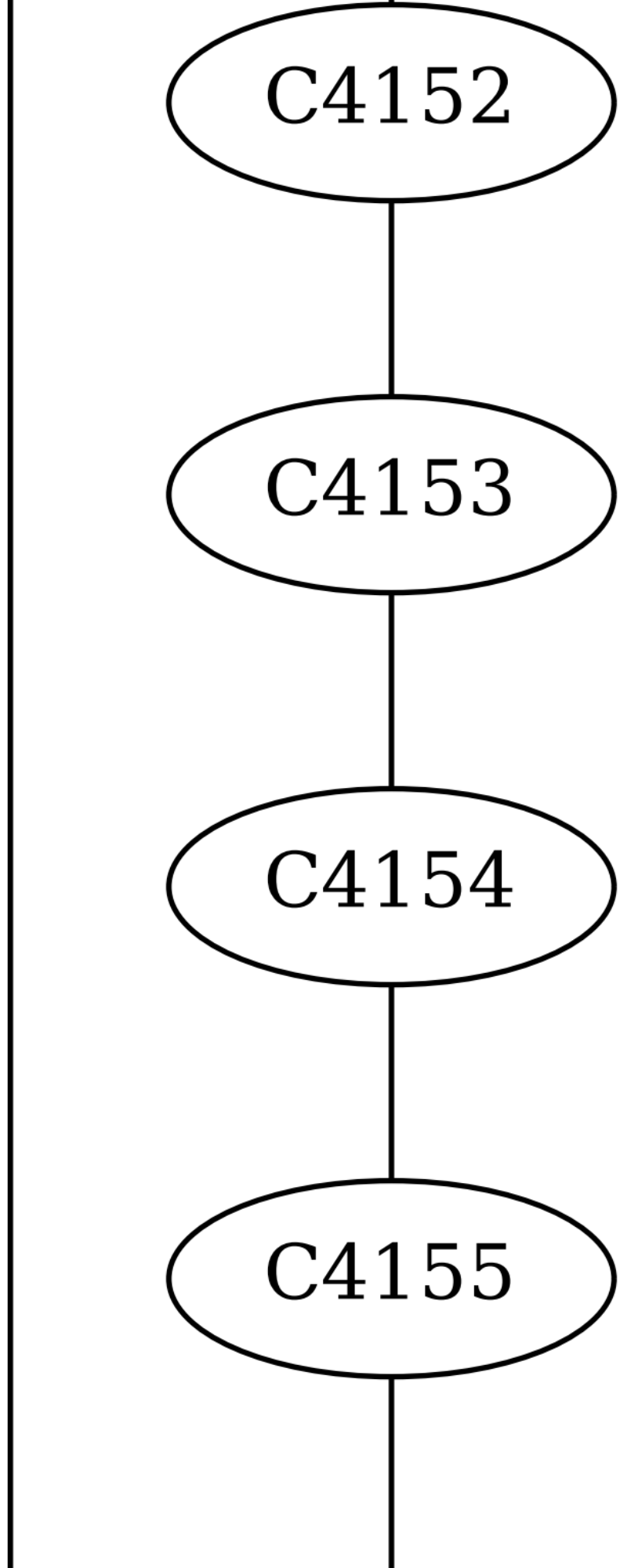
C4152
C4153
C4154
C4155

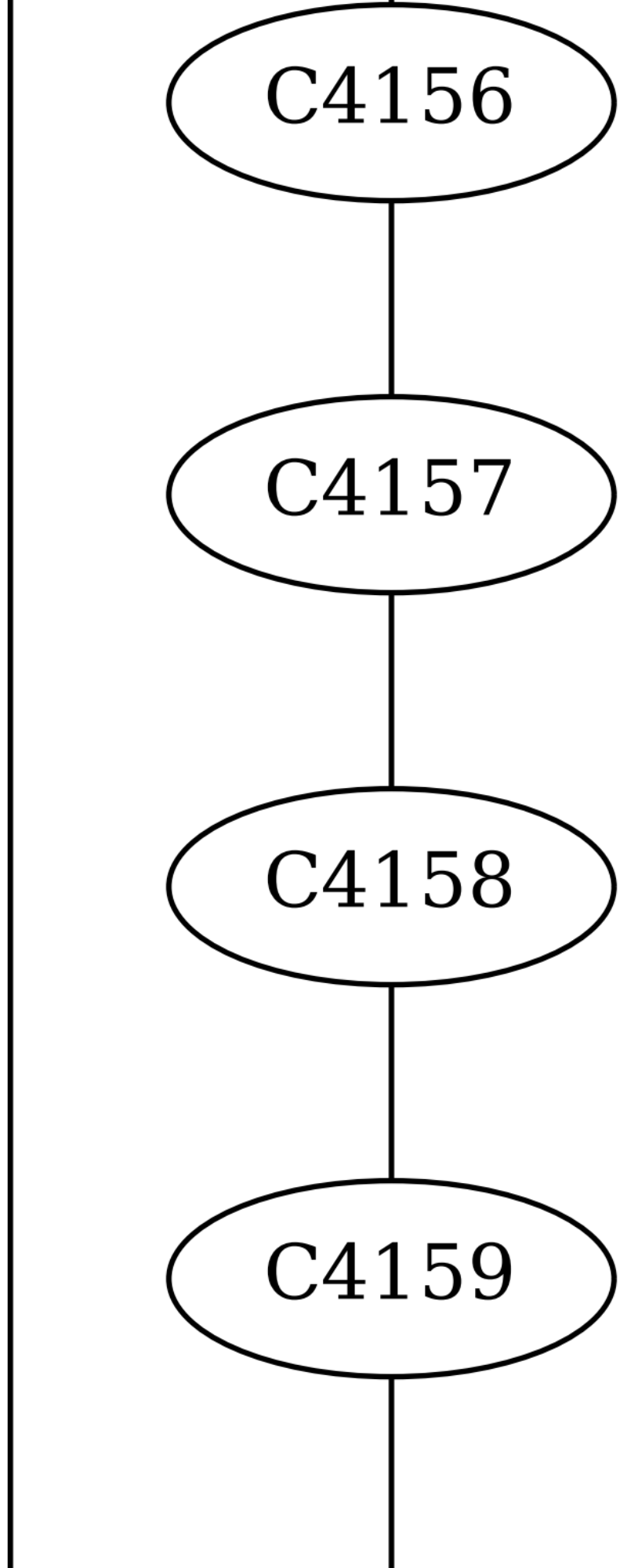
C4156
C4157
C4158
C4159

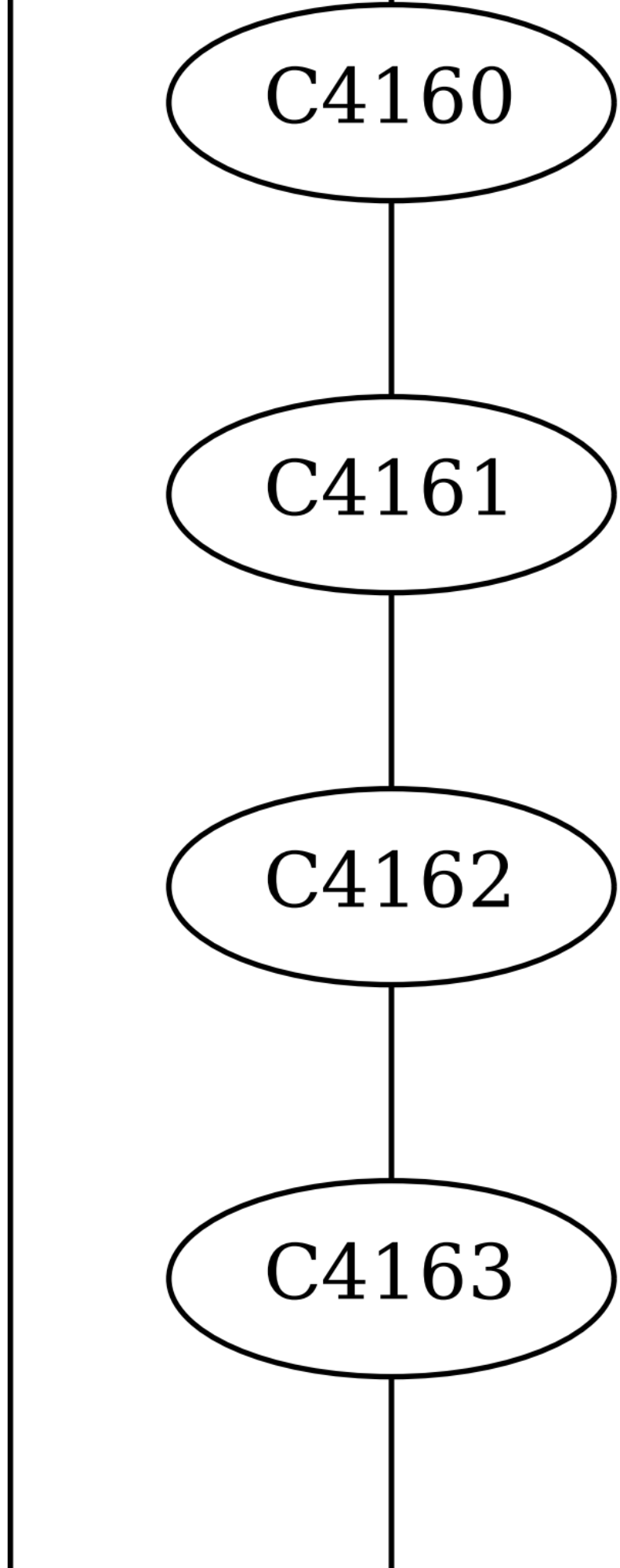
C4160
C4161
C4162
C4163

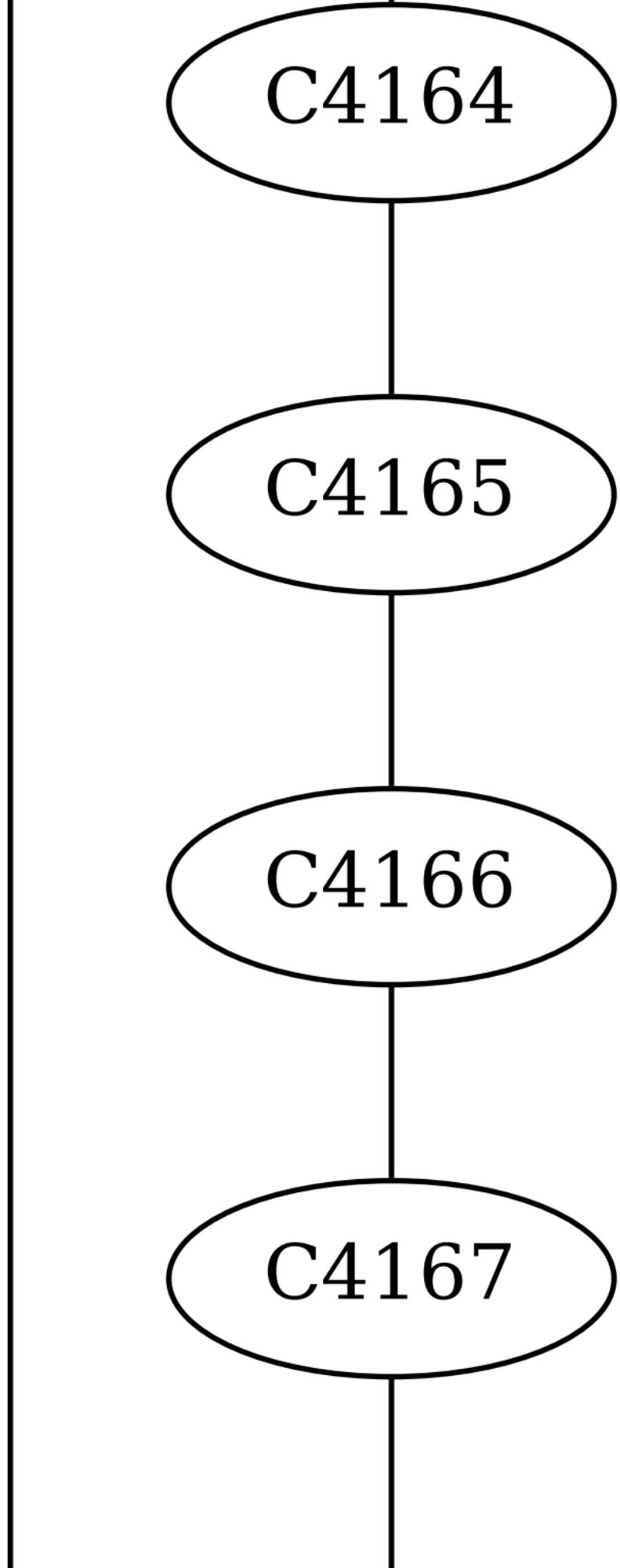
C4164
C4165
C4166
C4167

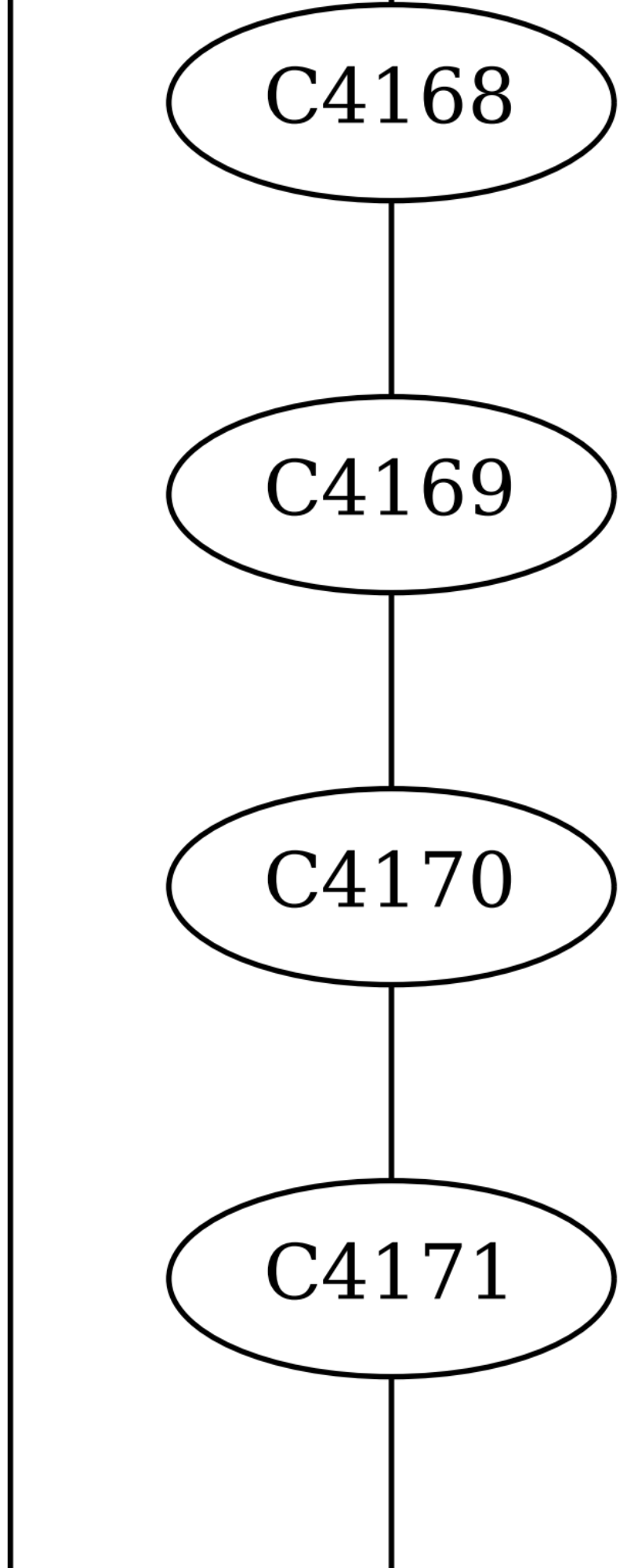
C4168
C4169
C4170
C4171

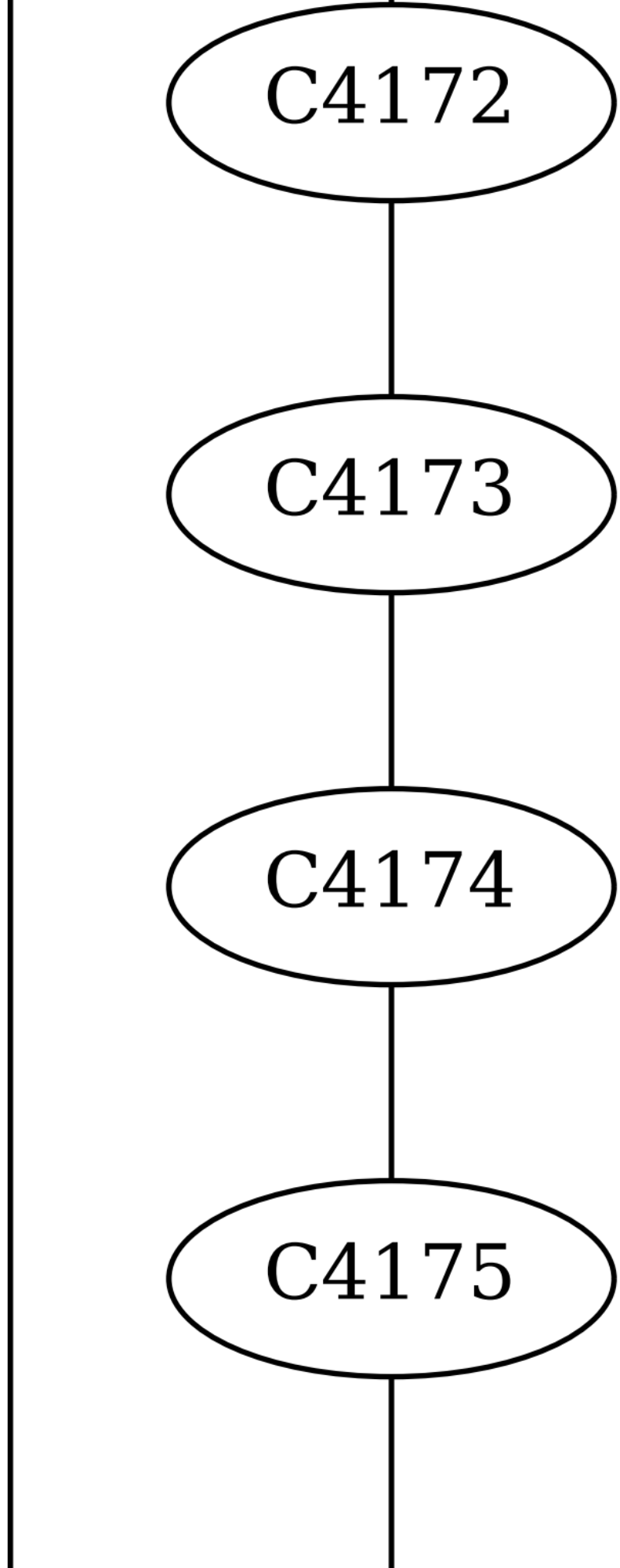
C4172
C4173
C4174
C4175

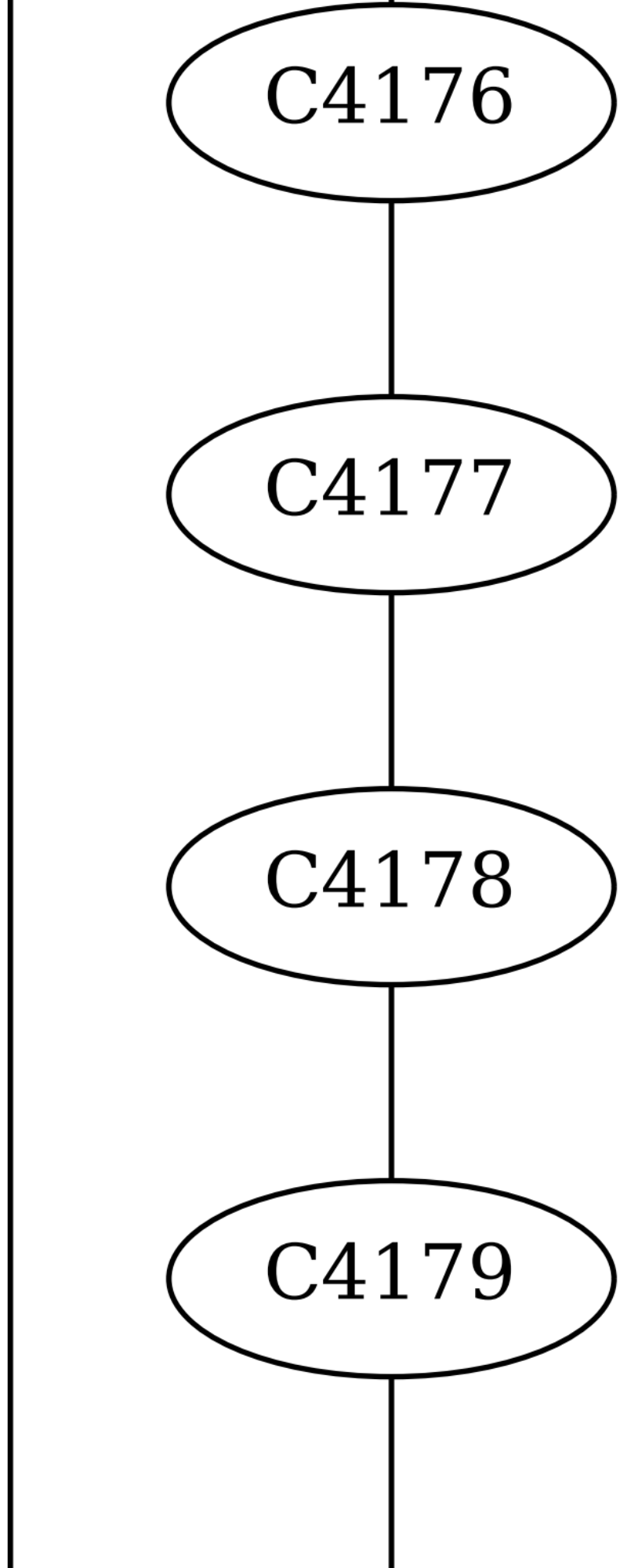
C4176
C4177
C4178
C4179

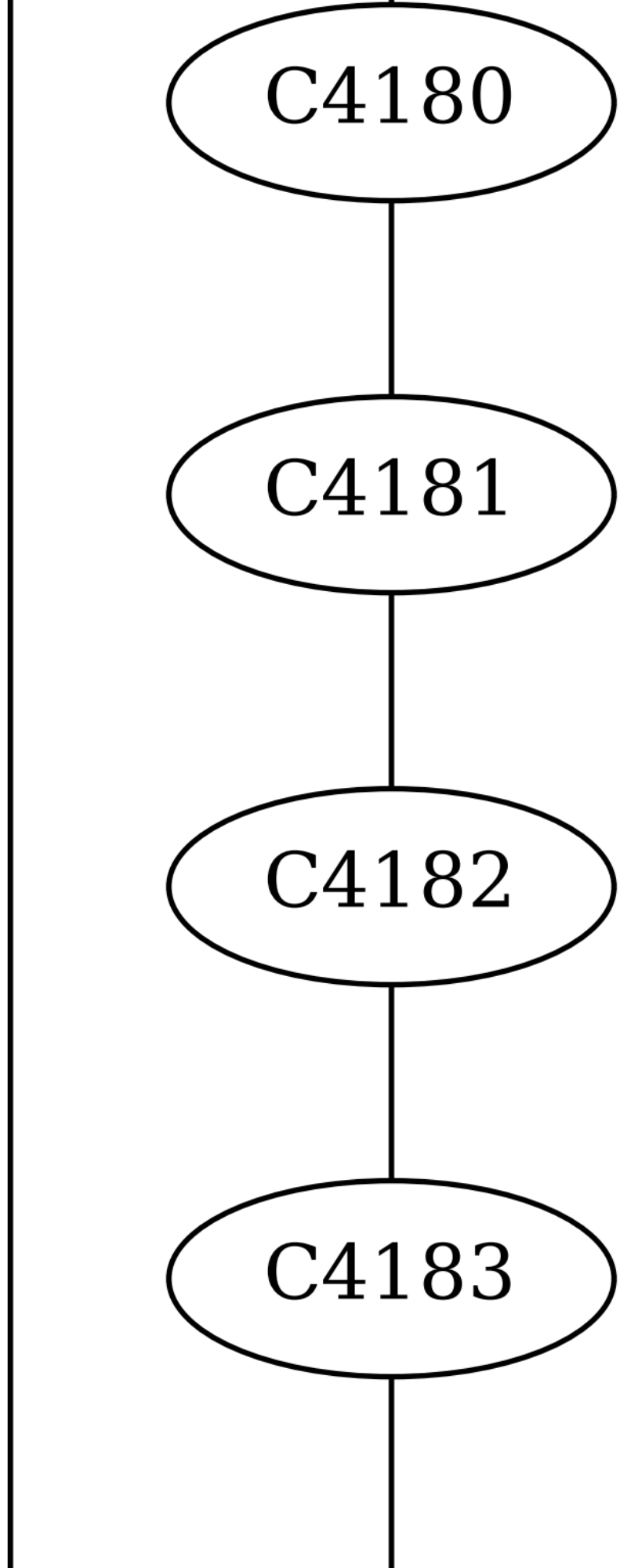
C4180
C4181
C4182
C4183

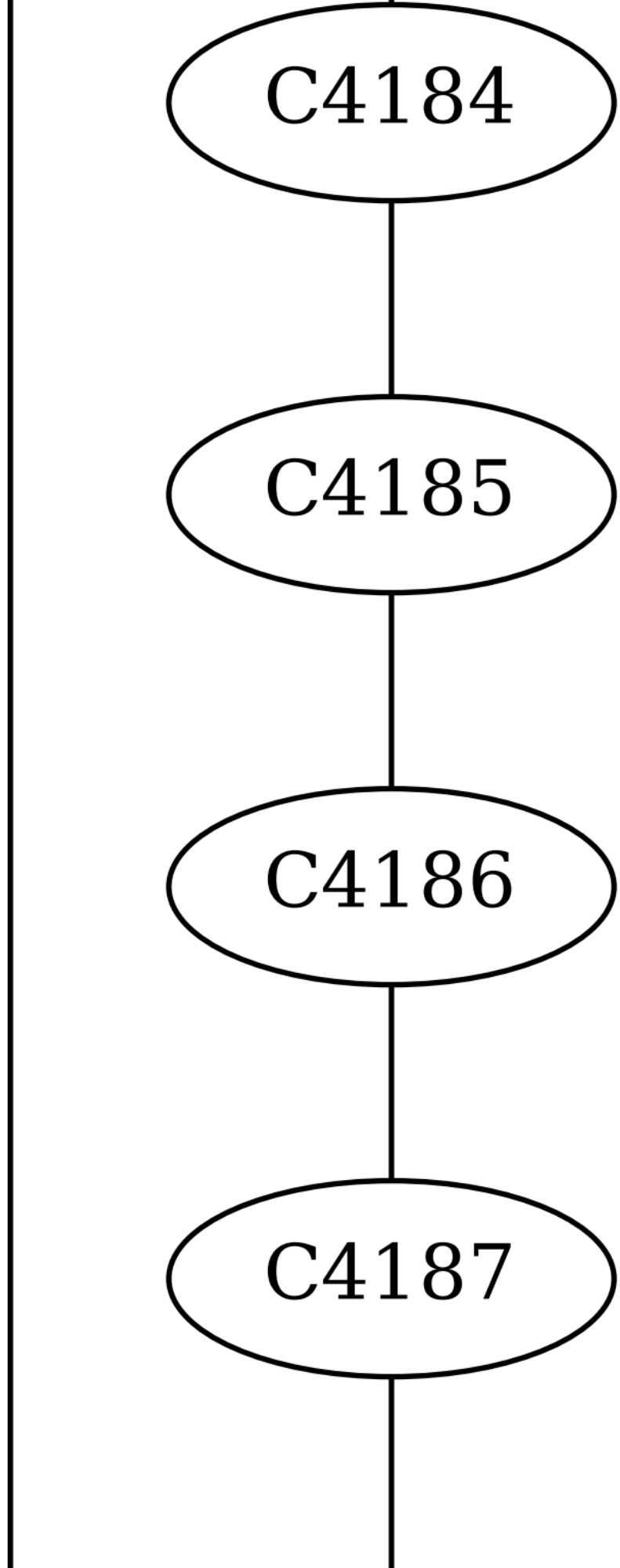
C4184
C4185
C4186
C4187

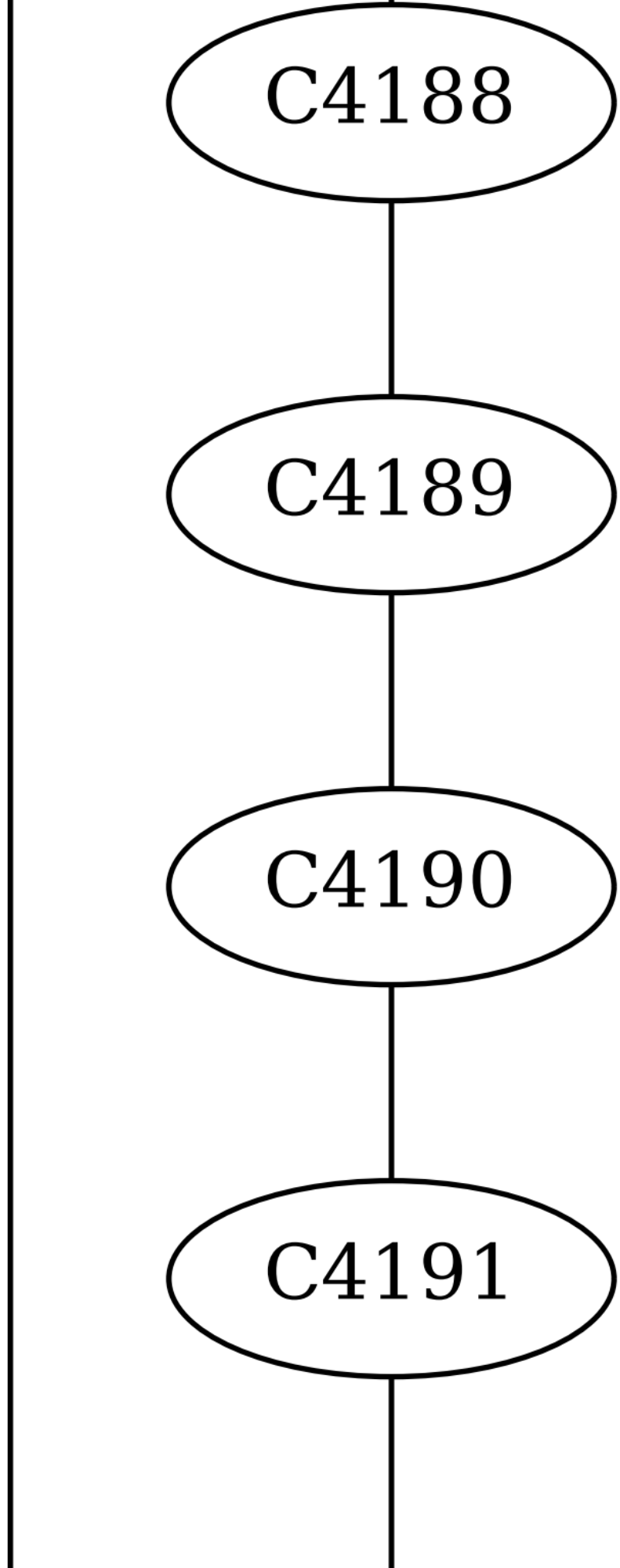
C4188
C4189
C4190
C4191

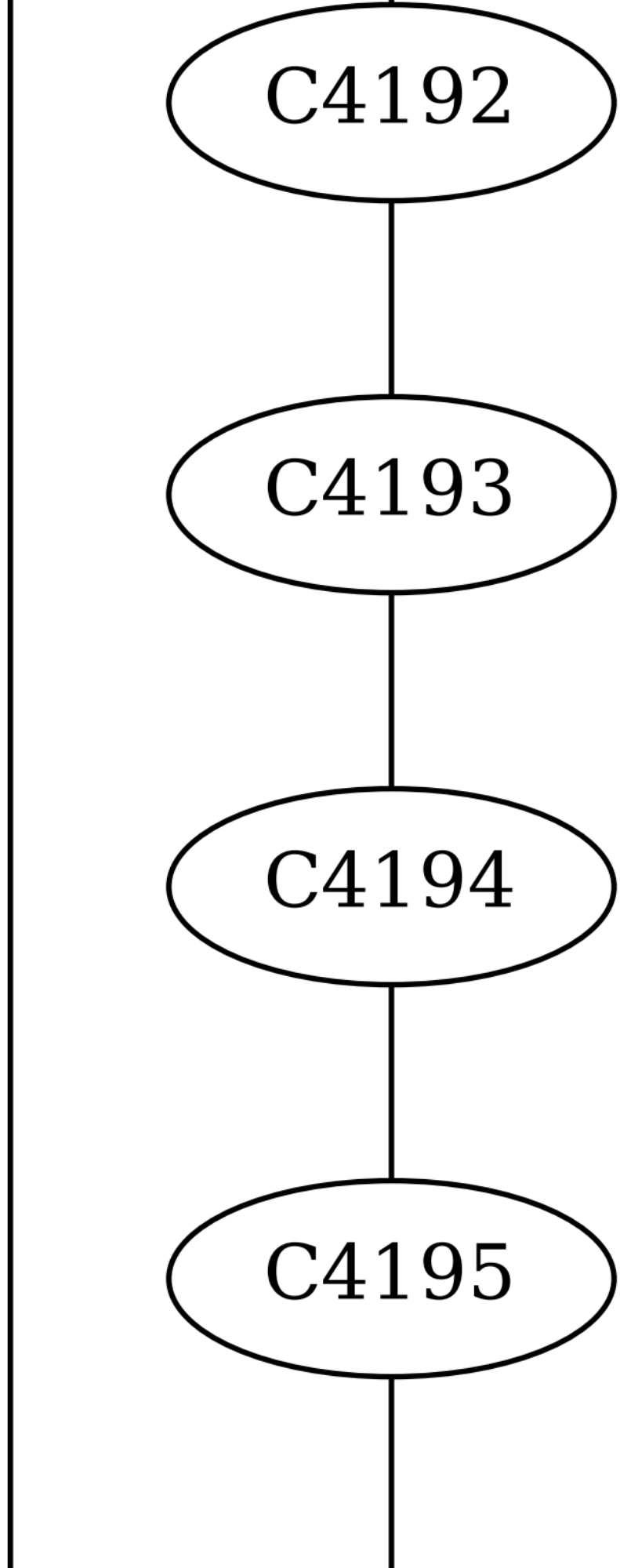
C4192
C4193
C4194
C4195

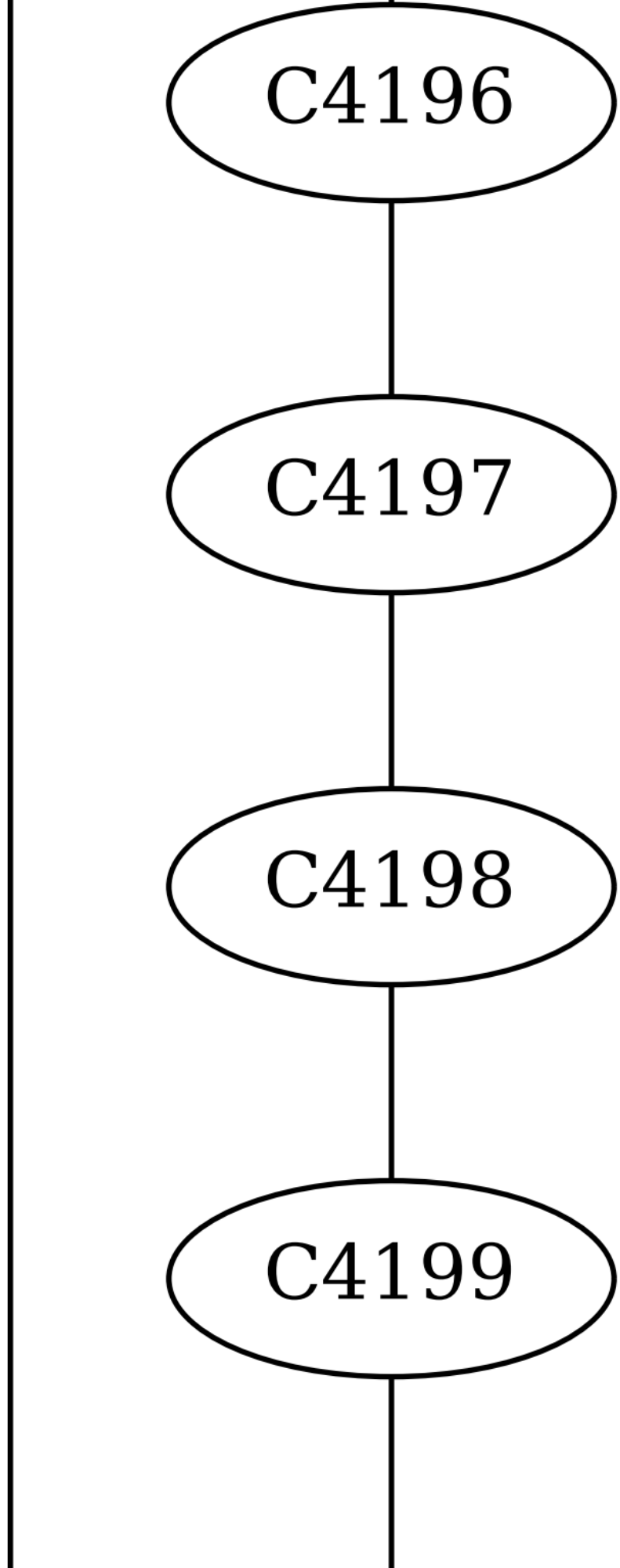
C4196
C4197
C4198
C4199

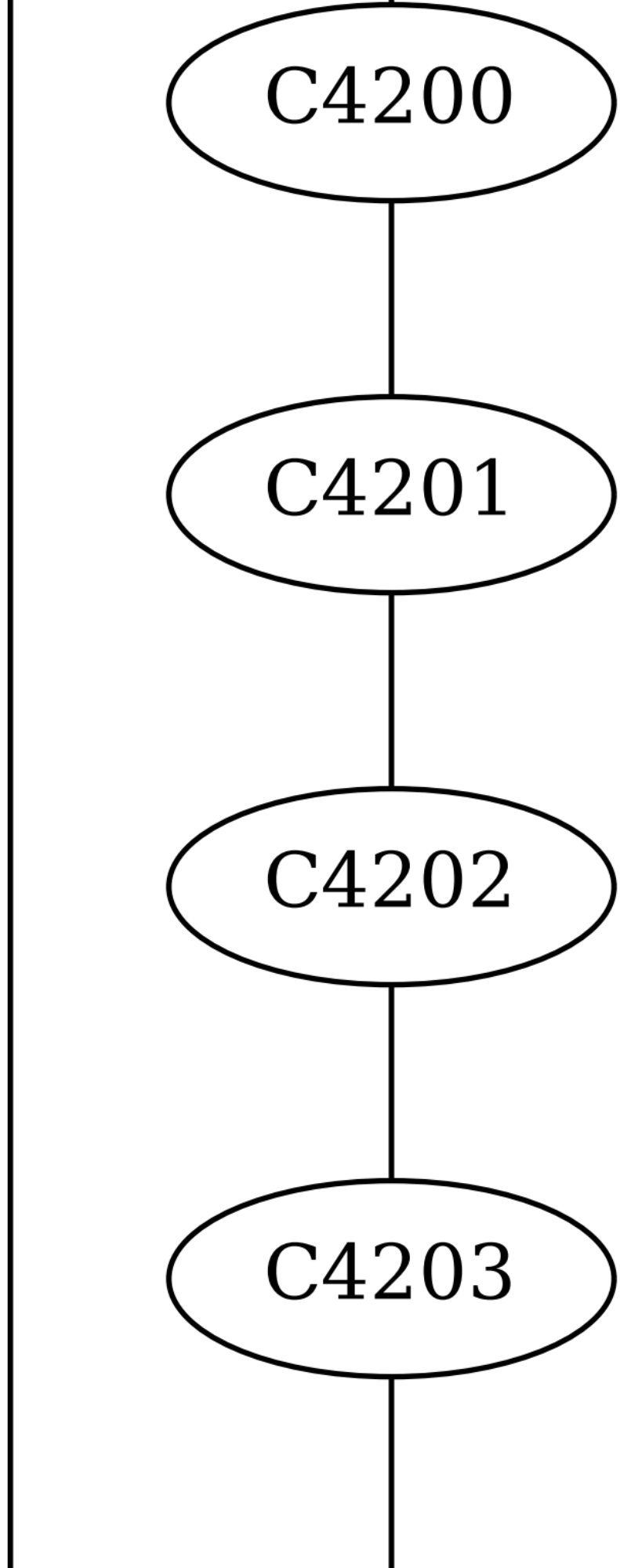
C4200
C4201
C4202
C4203

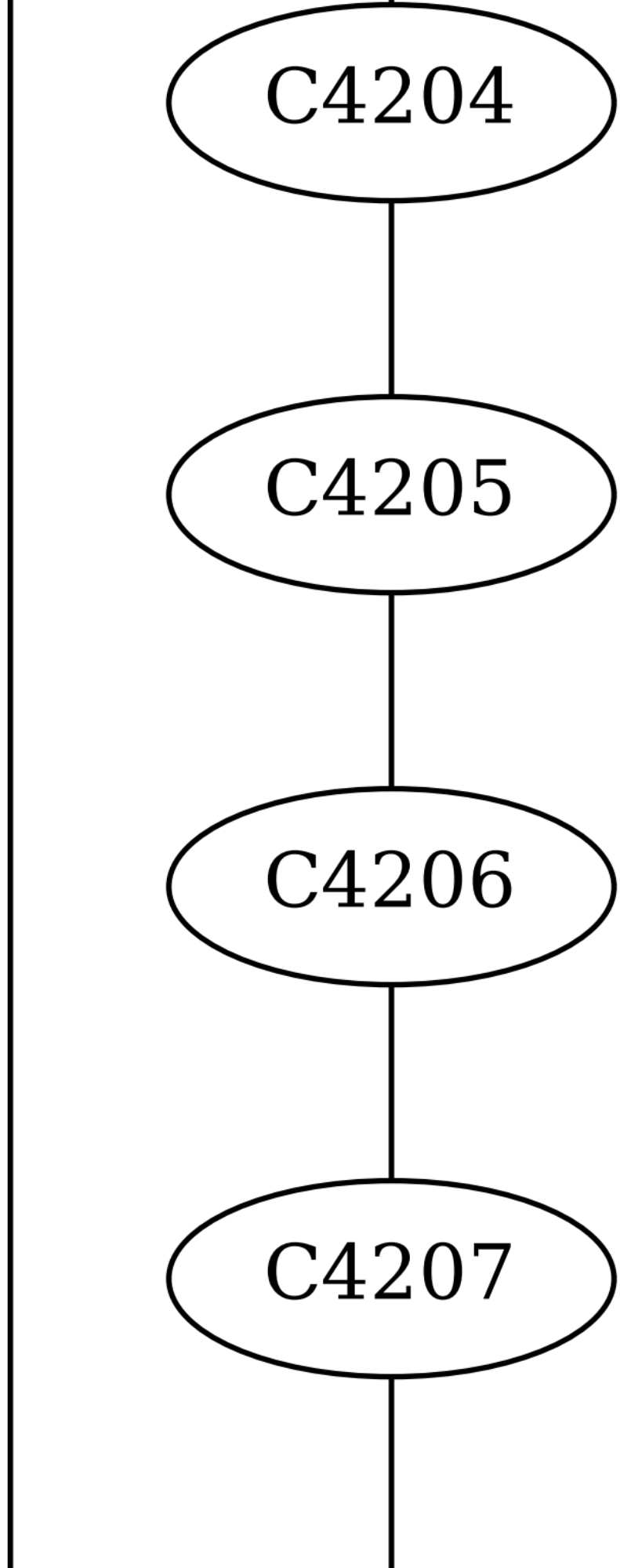
C4204
C4205
C4206
C4207

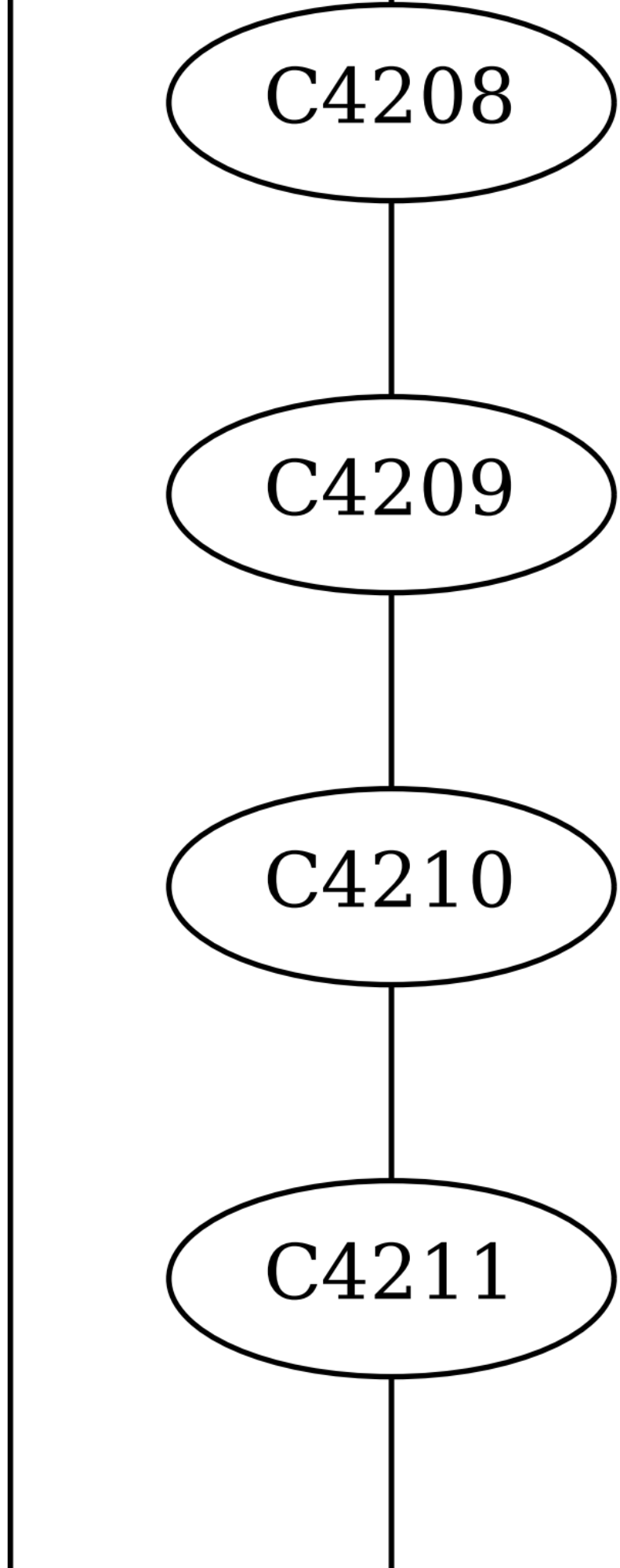
C4208
C4209
C4210
C4211

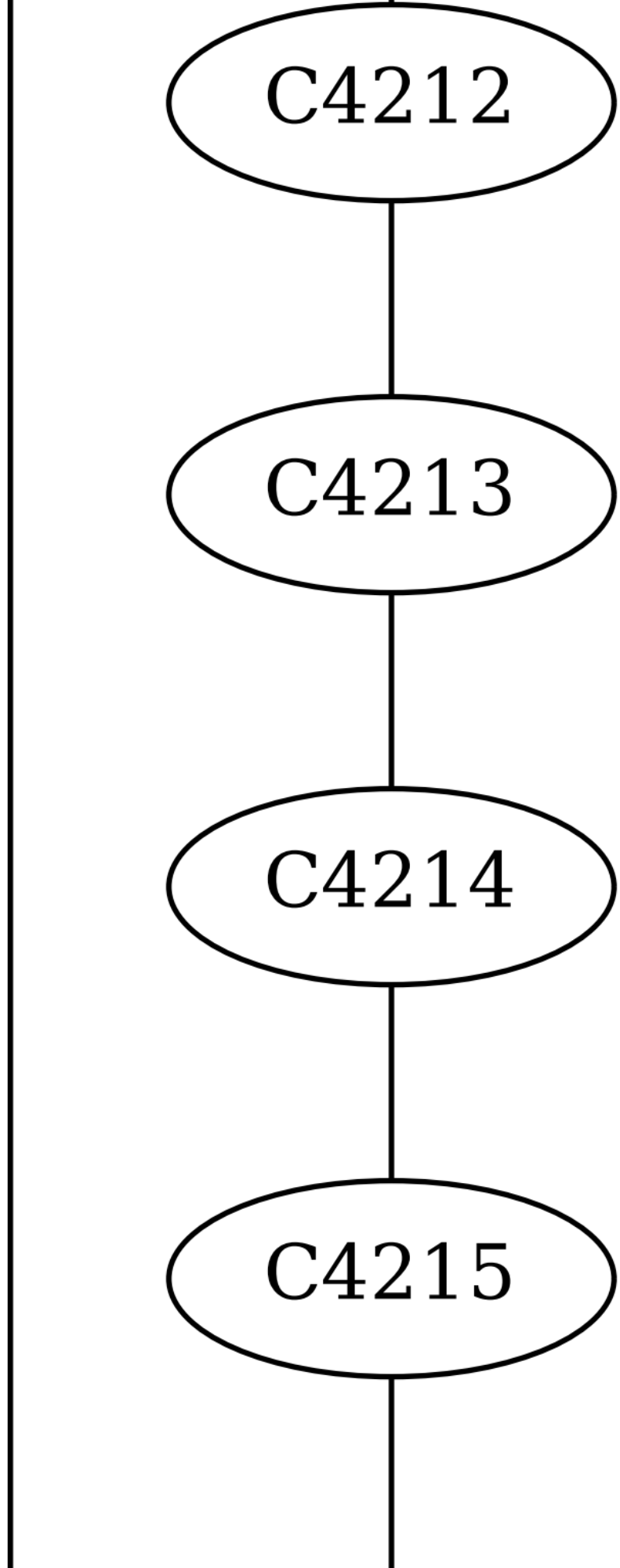
C4212
C4213
C4214
C4215

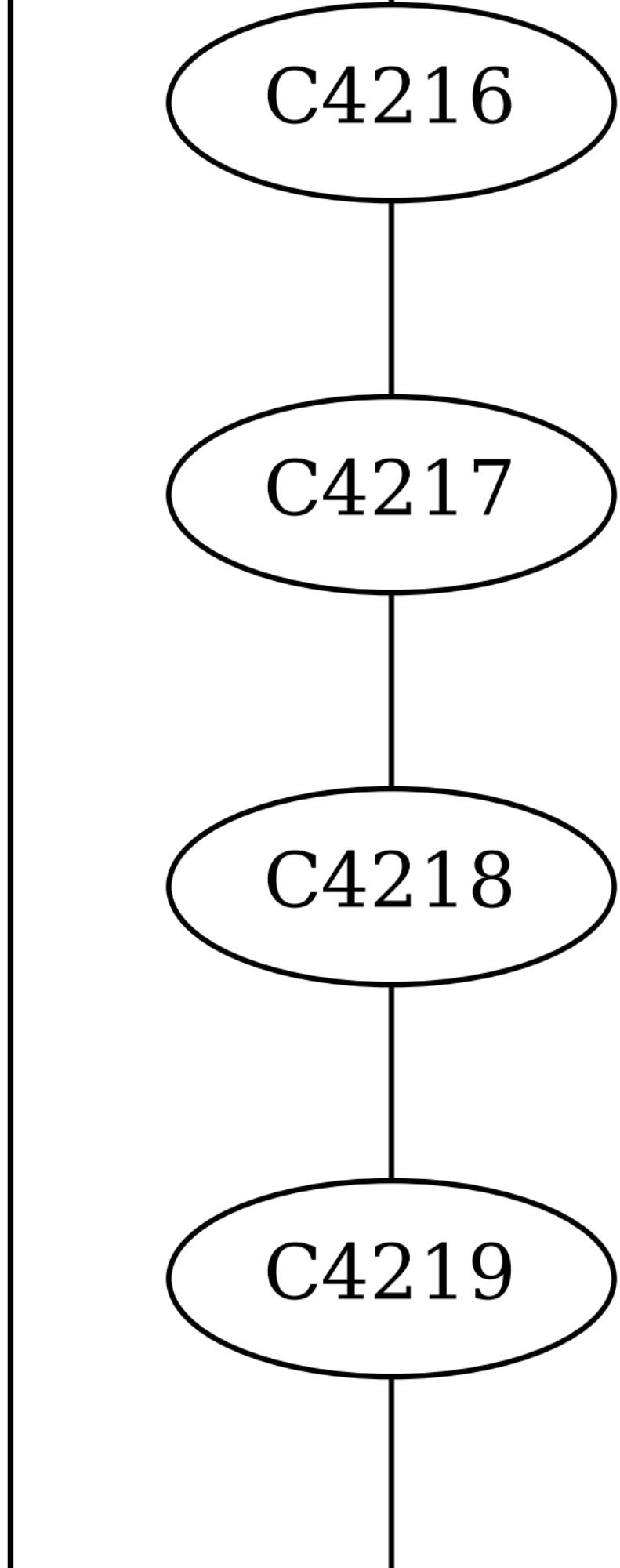
C4216
C4217
C4218
C4219

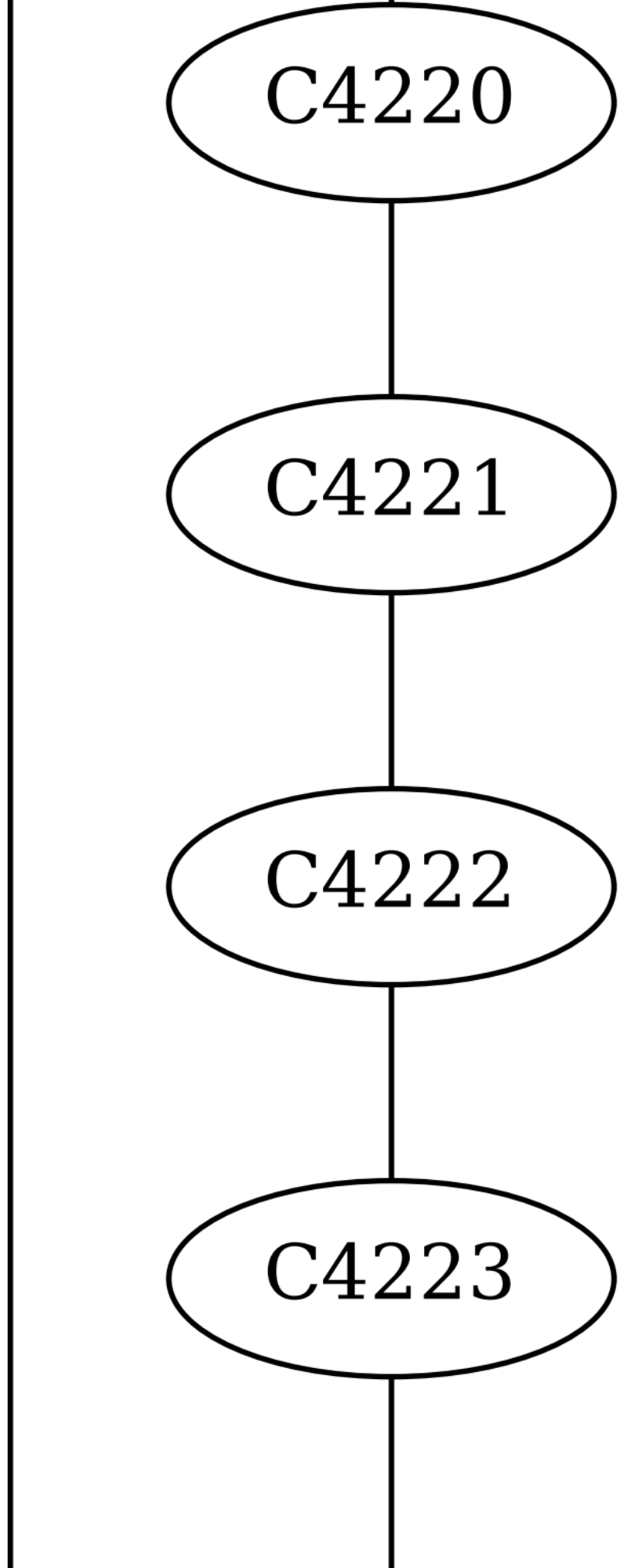
C4220
C4221
C4222
C4223

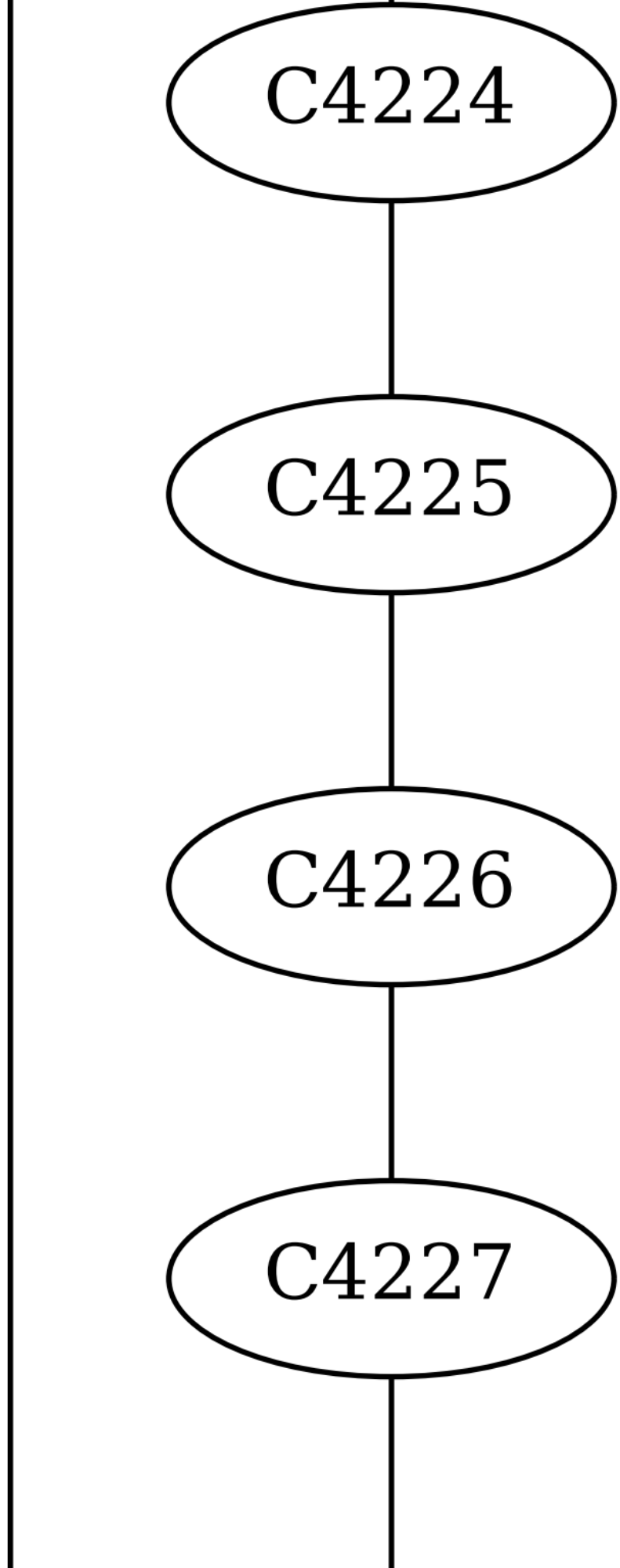
C4224
C4225
C4226
C4227

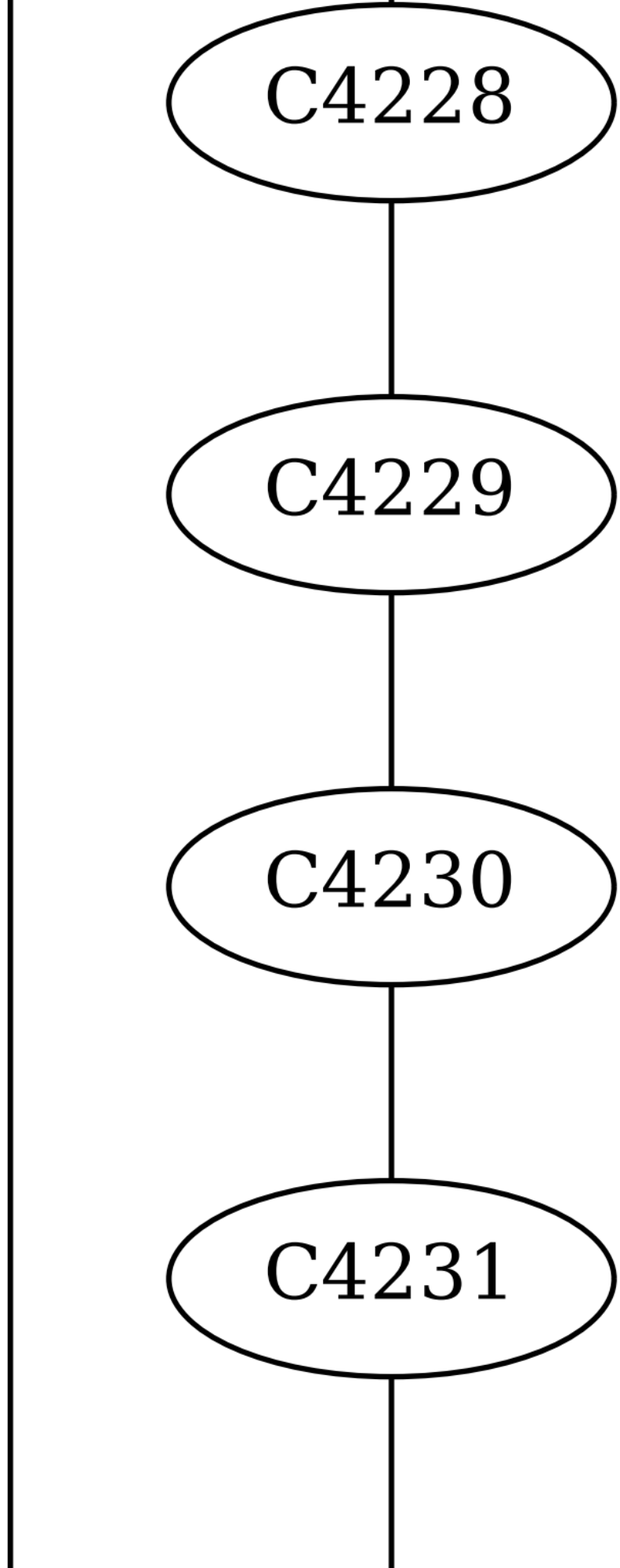
C4228
C4229
C4230
C4231

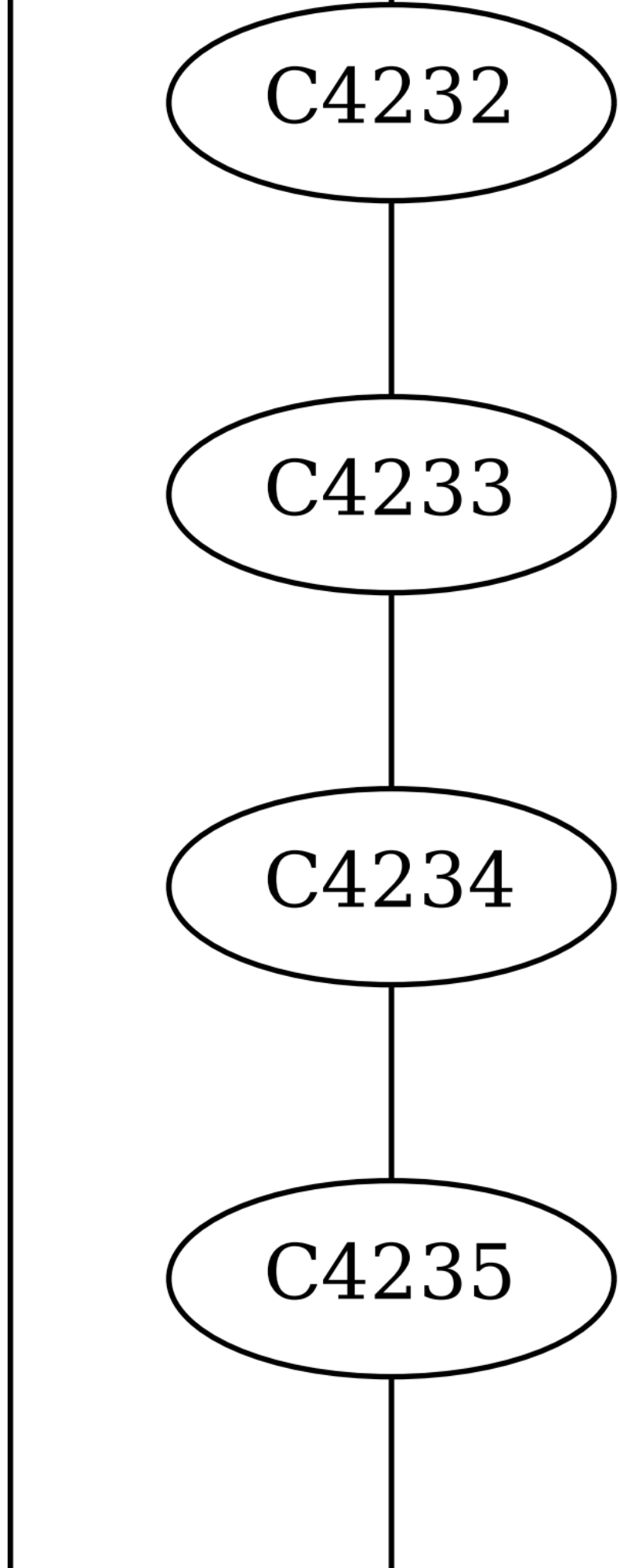
C4232
C4233
C4234
C4235

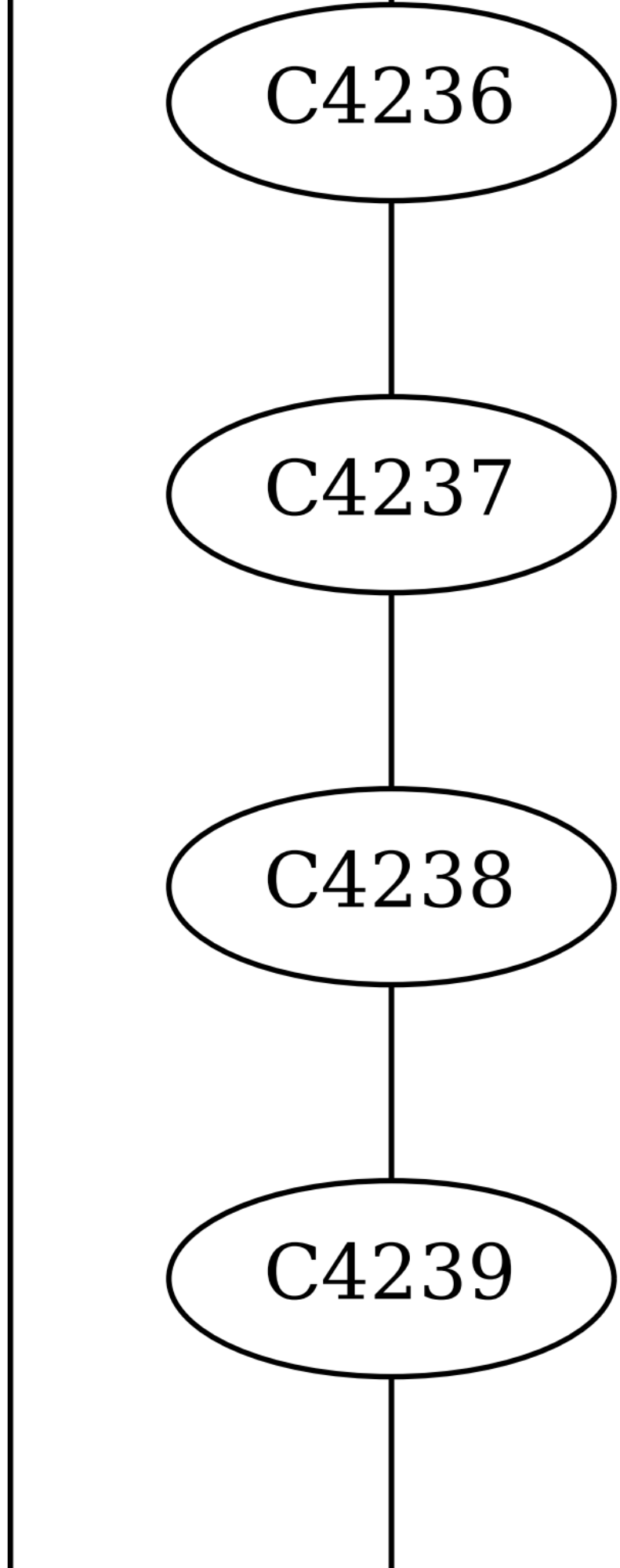
C4236
C4237
C4238
C4239

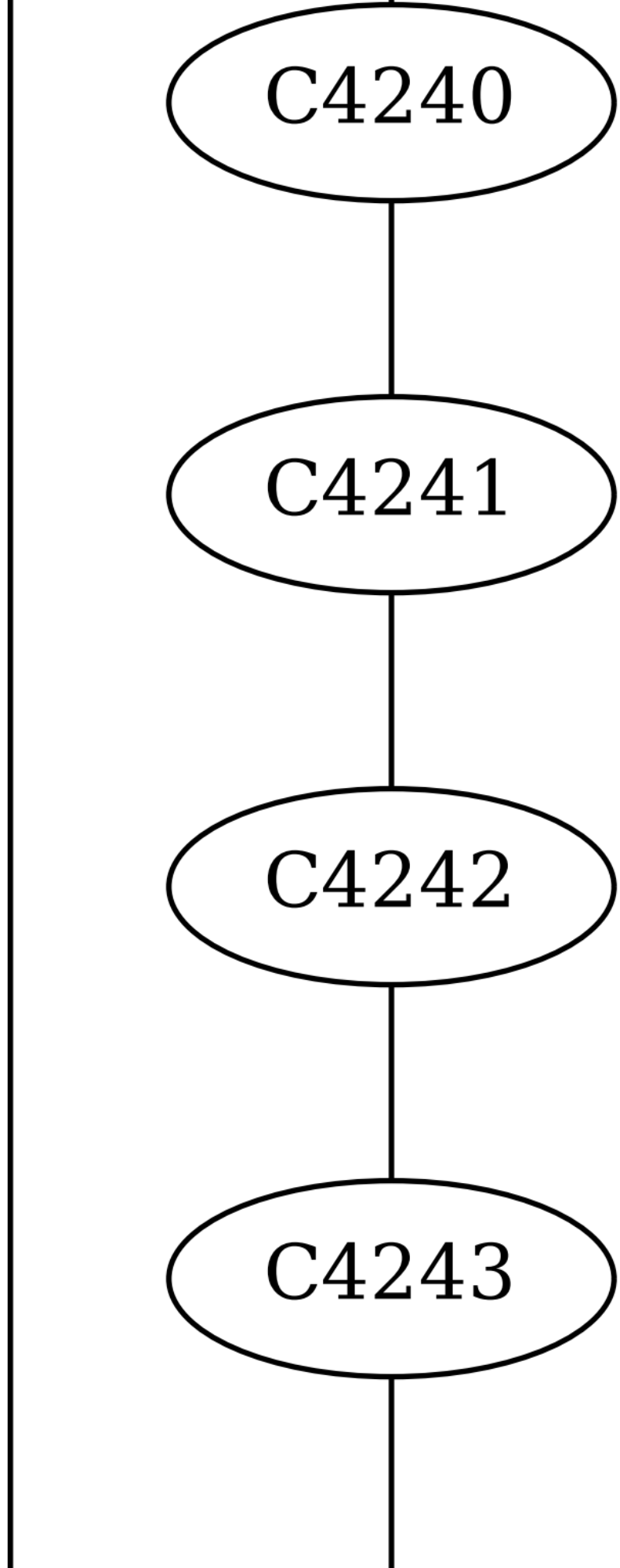
C4240
C4241
C4242
C4243

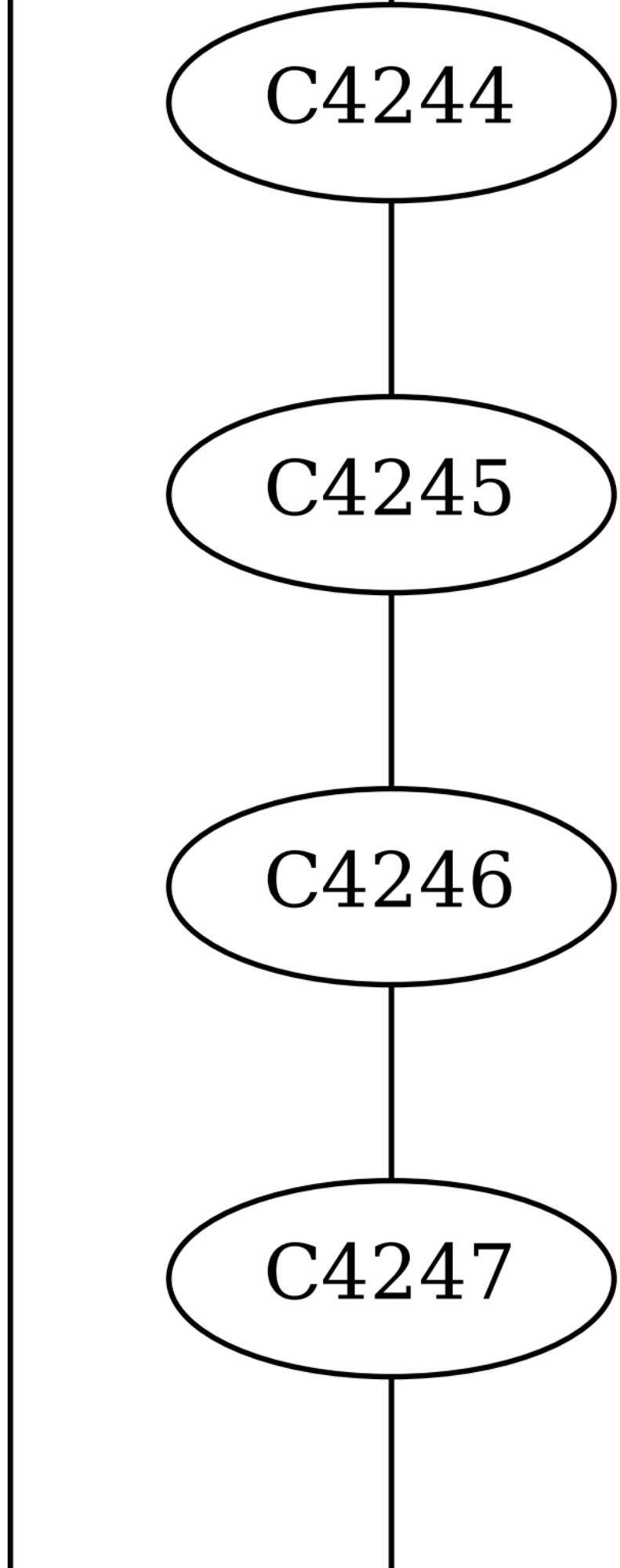
C4244
C4245
C4246
C4247

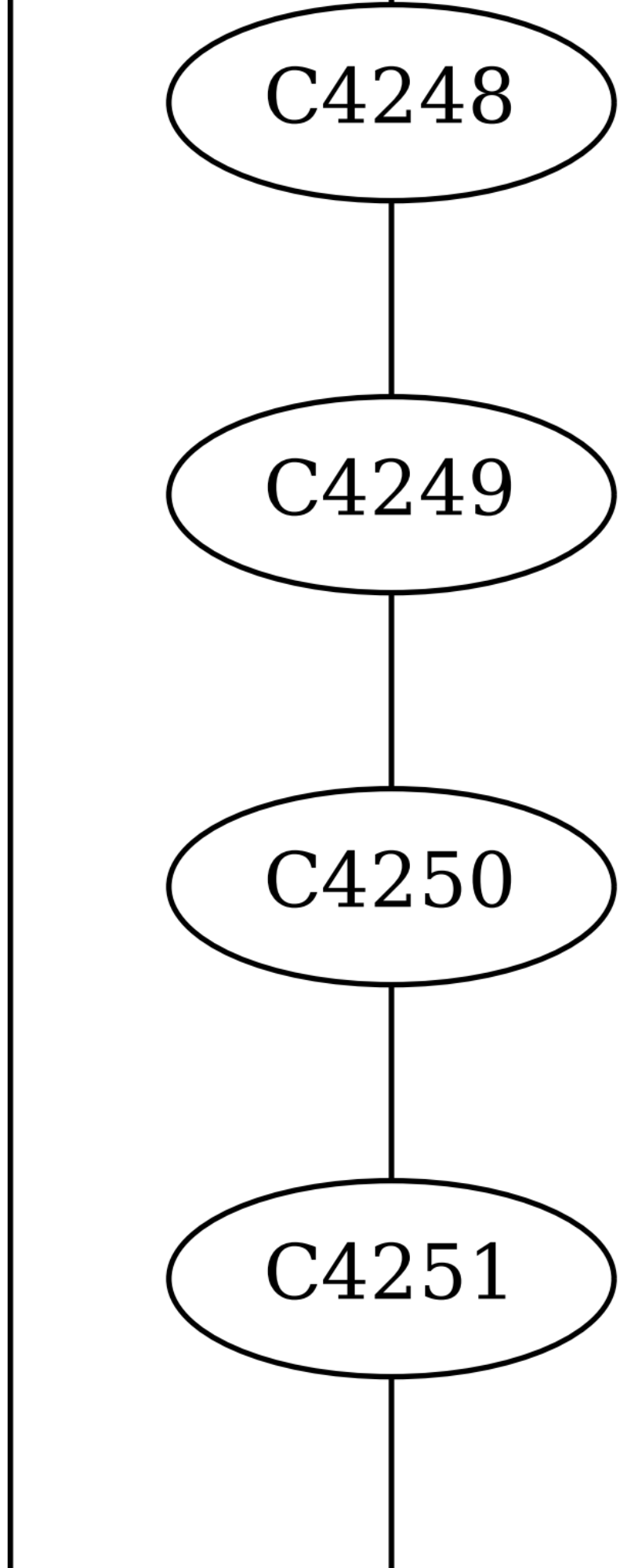
C4248
C4249
C4250
C4251

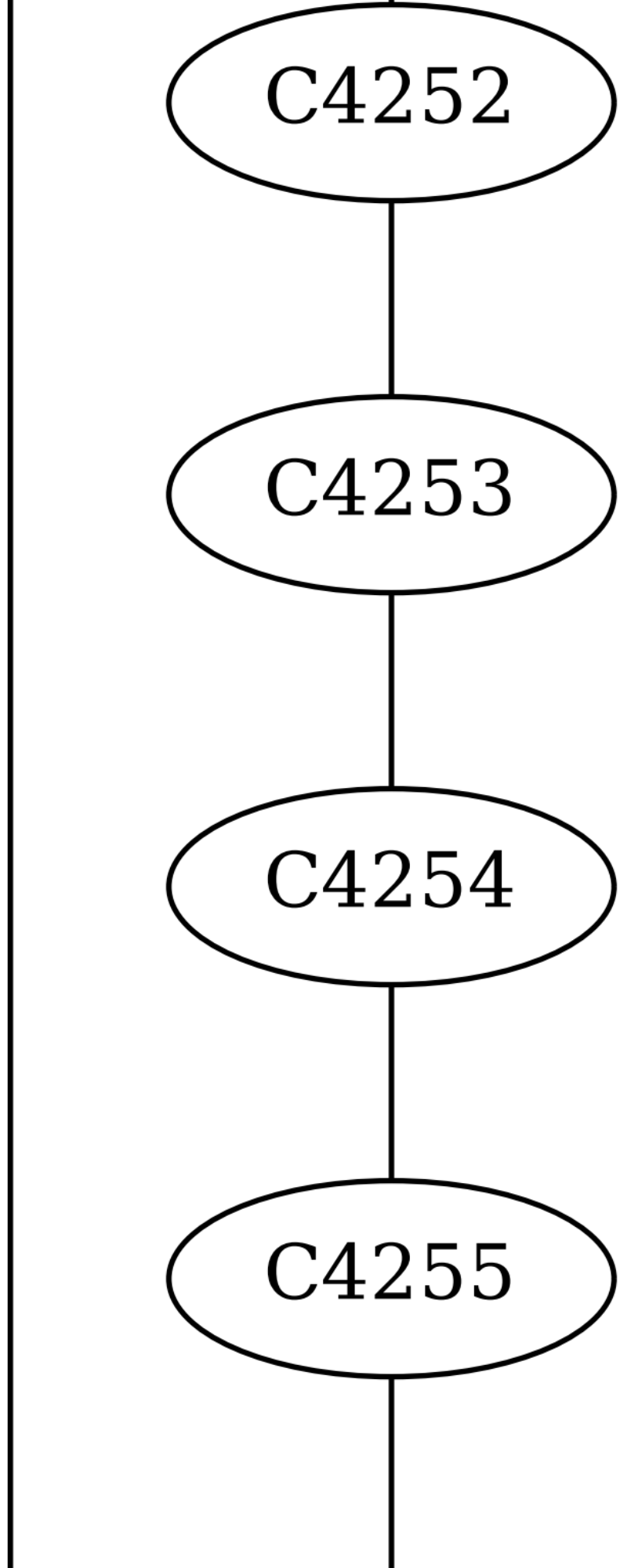
C4252
C4253
C4254
C4255

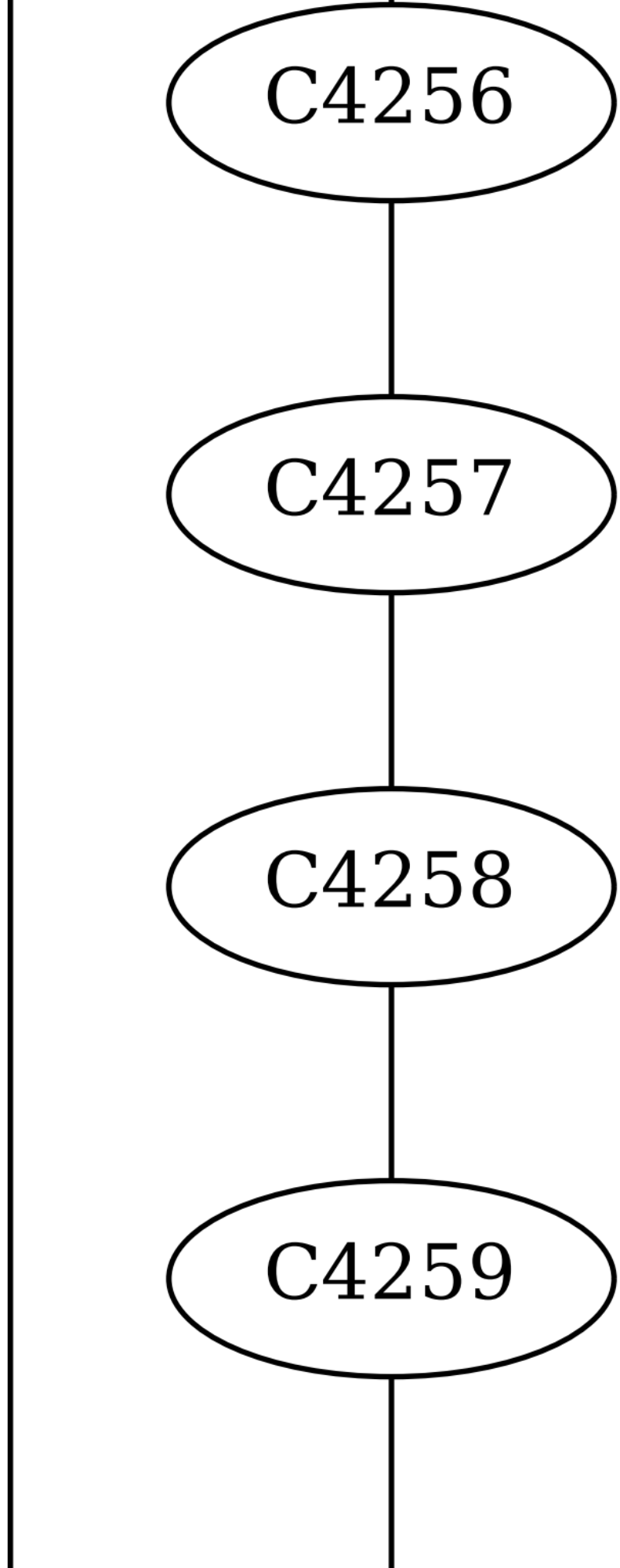
C4256
C4257
C4258
C4259

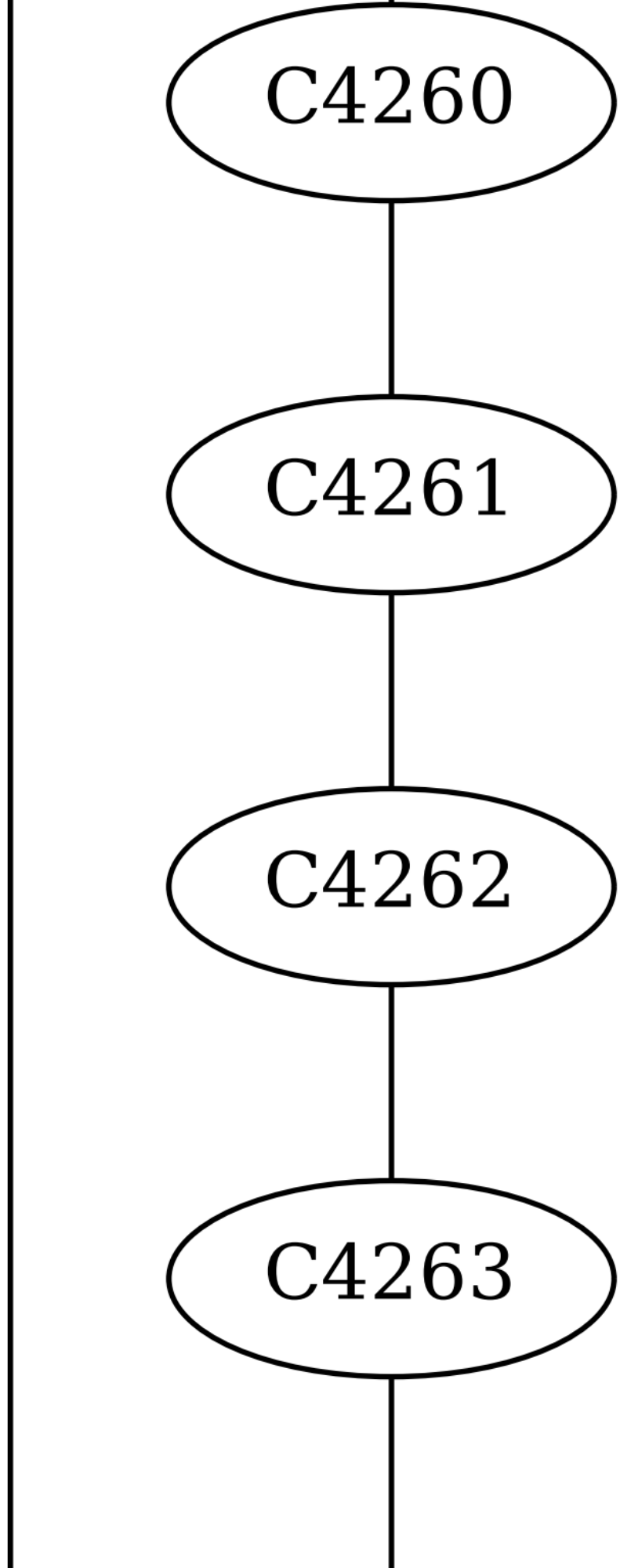
C4260
C4261
C4262
C4263

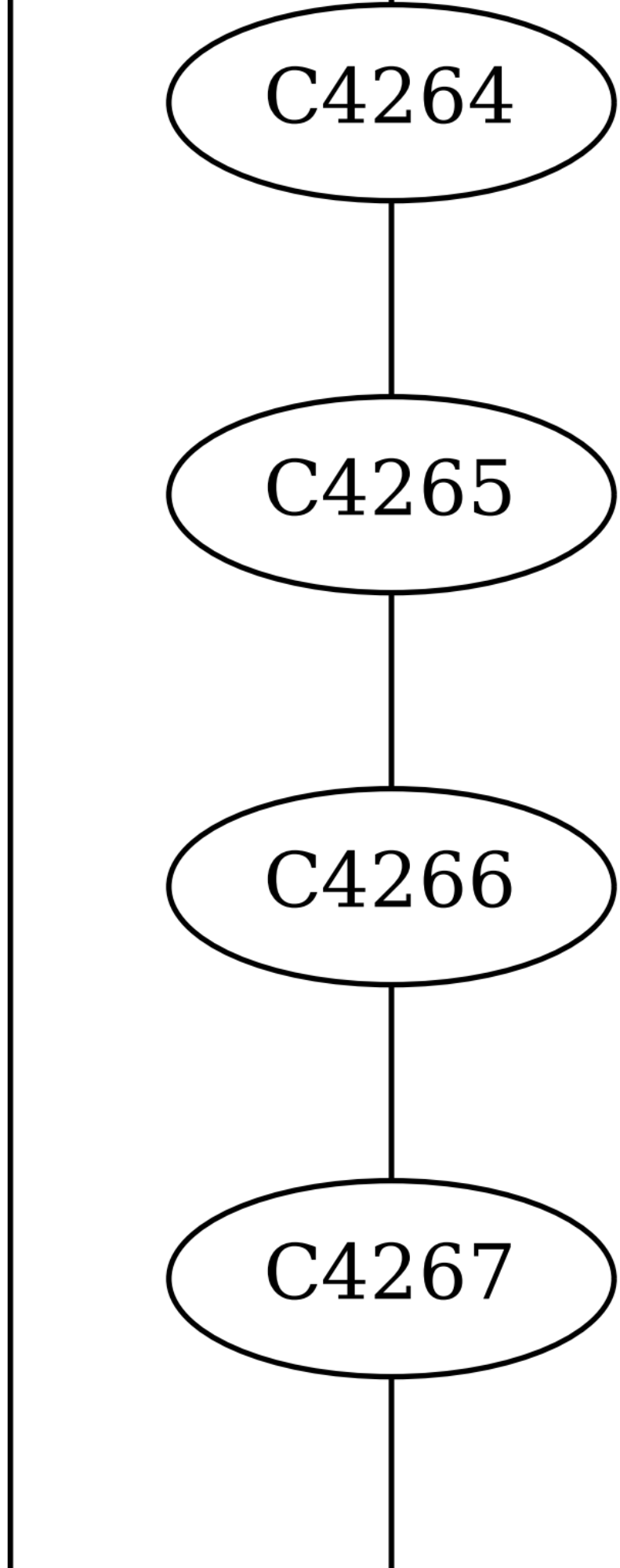
C4264
C4265
C4266
C4267

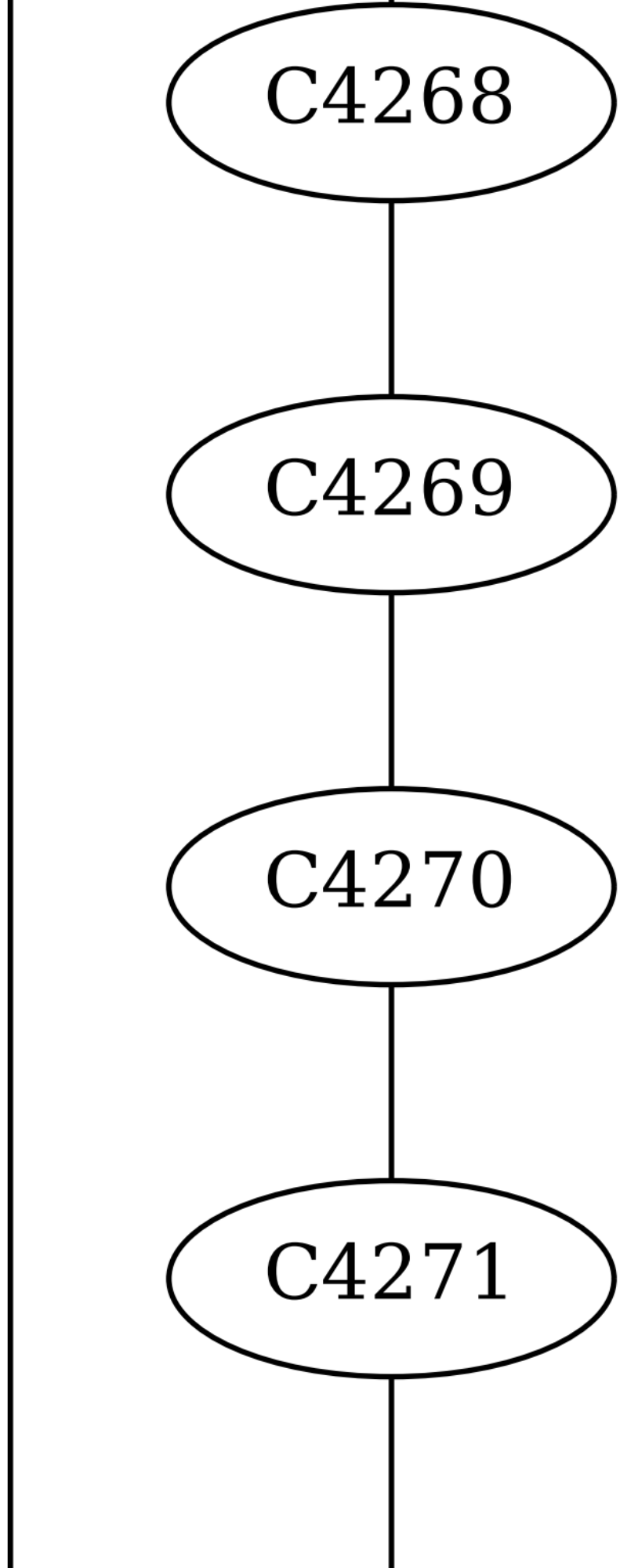
C4268
C4269
C4270
C4271

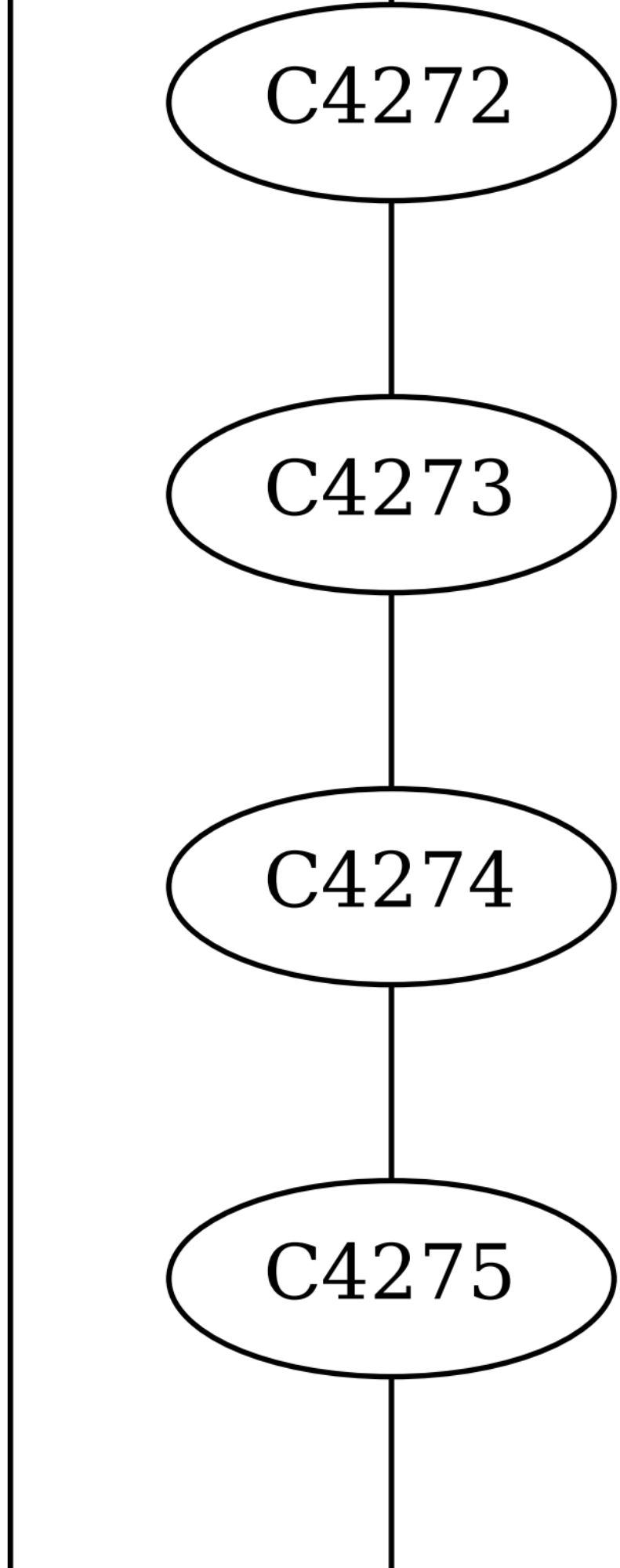
C4272
C4273
C4274
C4275

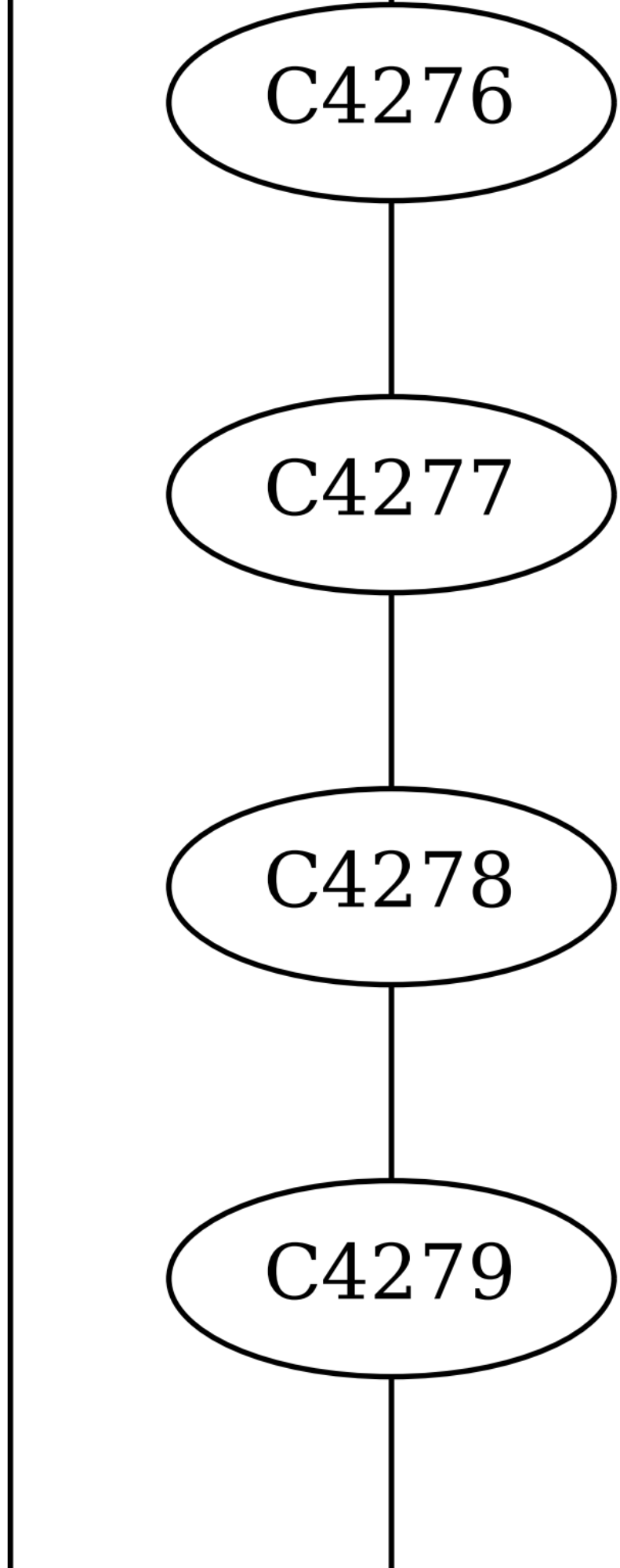
C4276
C4277
C4278
C4279

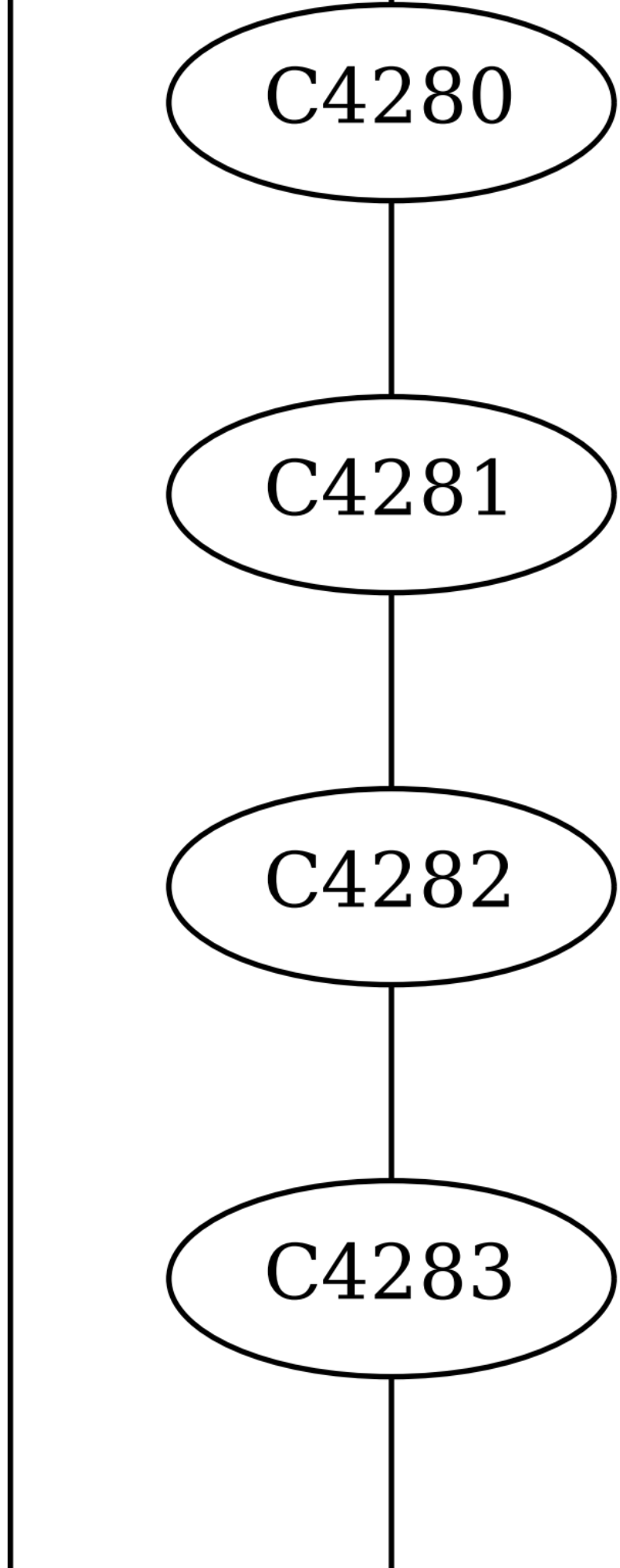
C4280
C4281
C4282
C4283

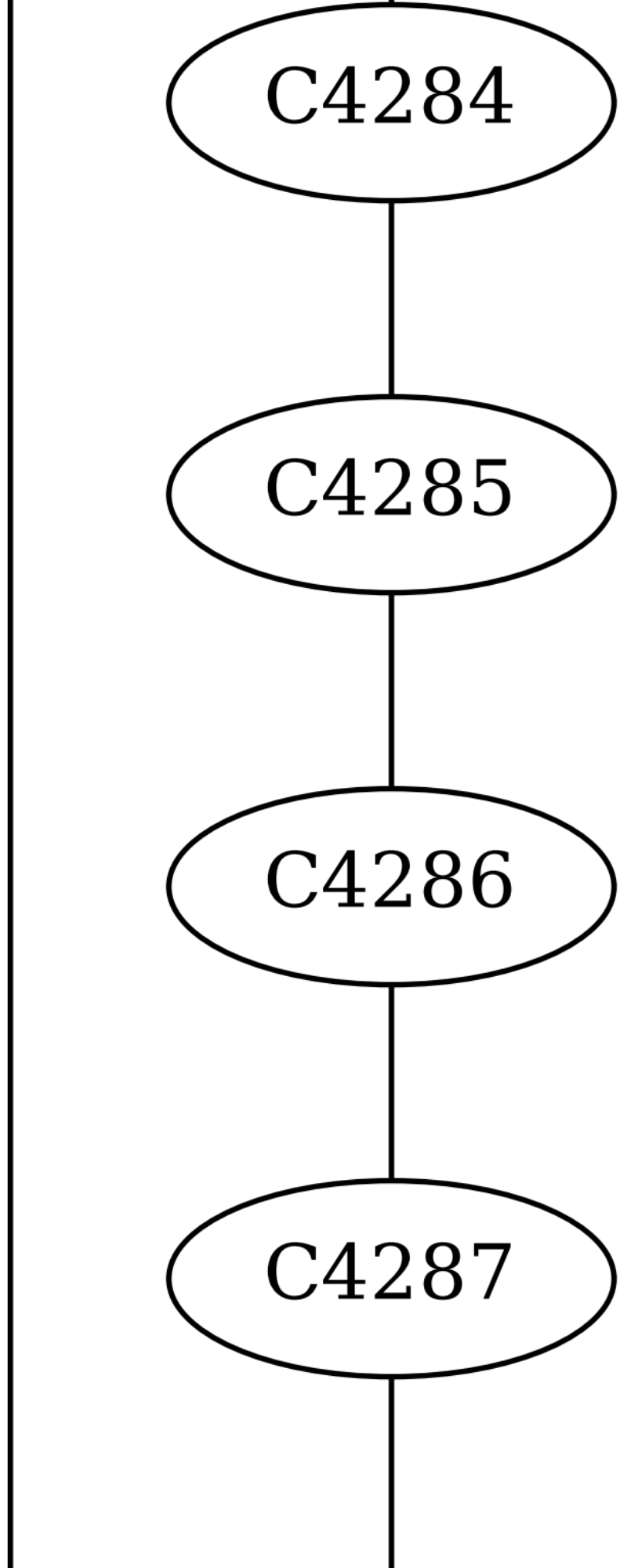
C4284
C4285
C4286
C4287

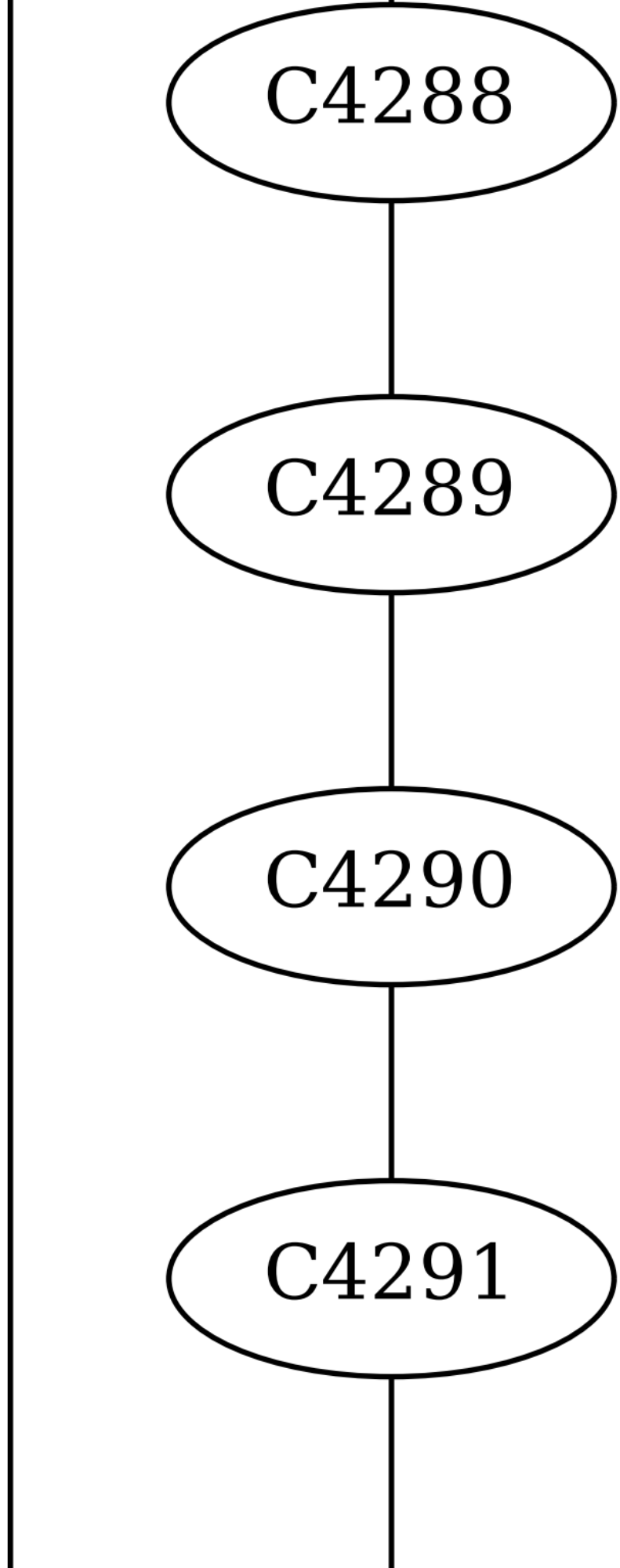
C4288
C4289
C4290
C4291

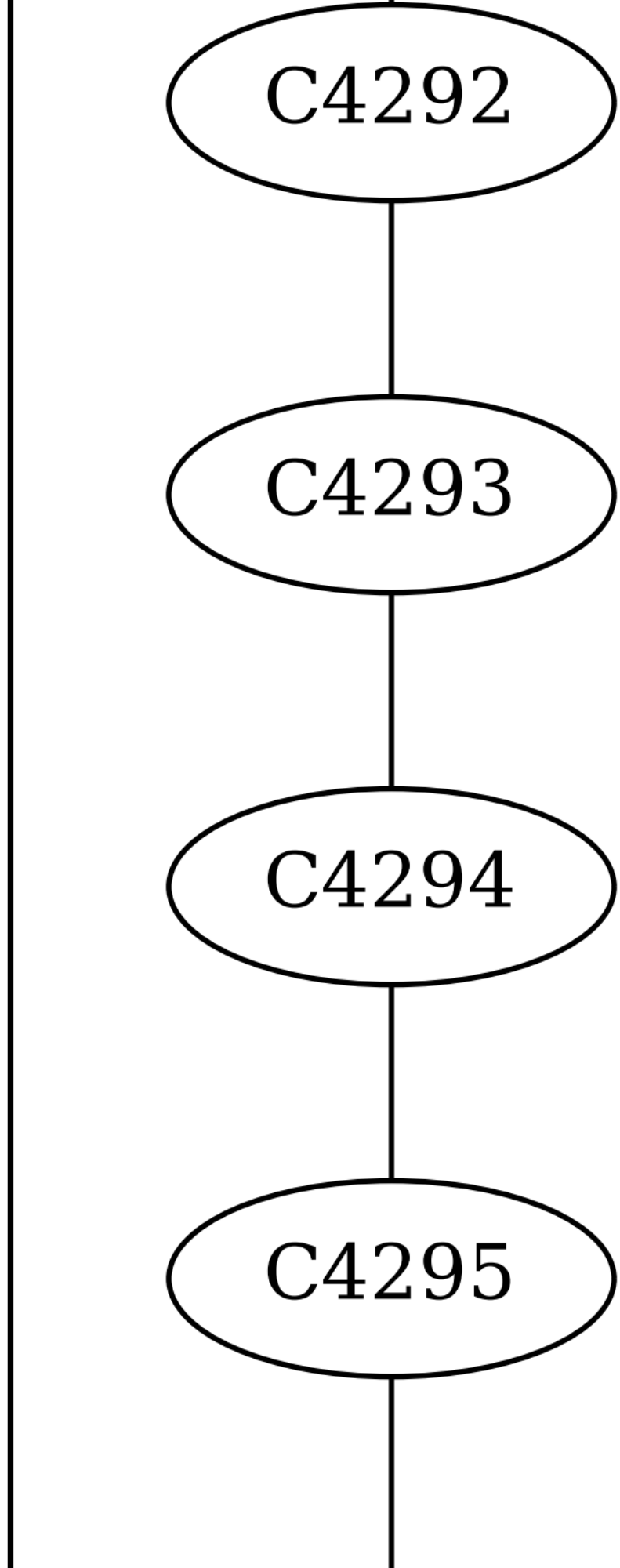
C4292
C4293
C4294
C4295

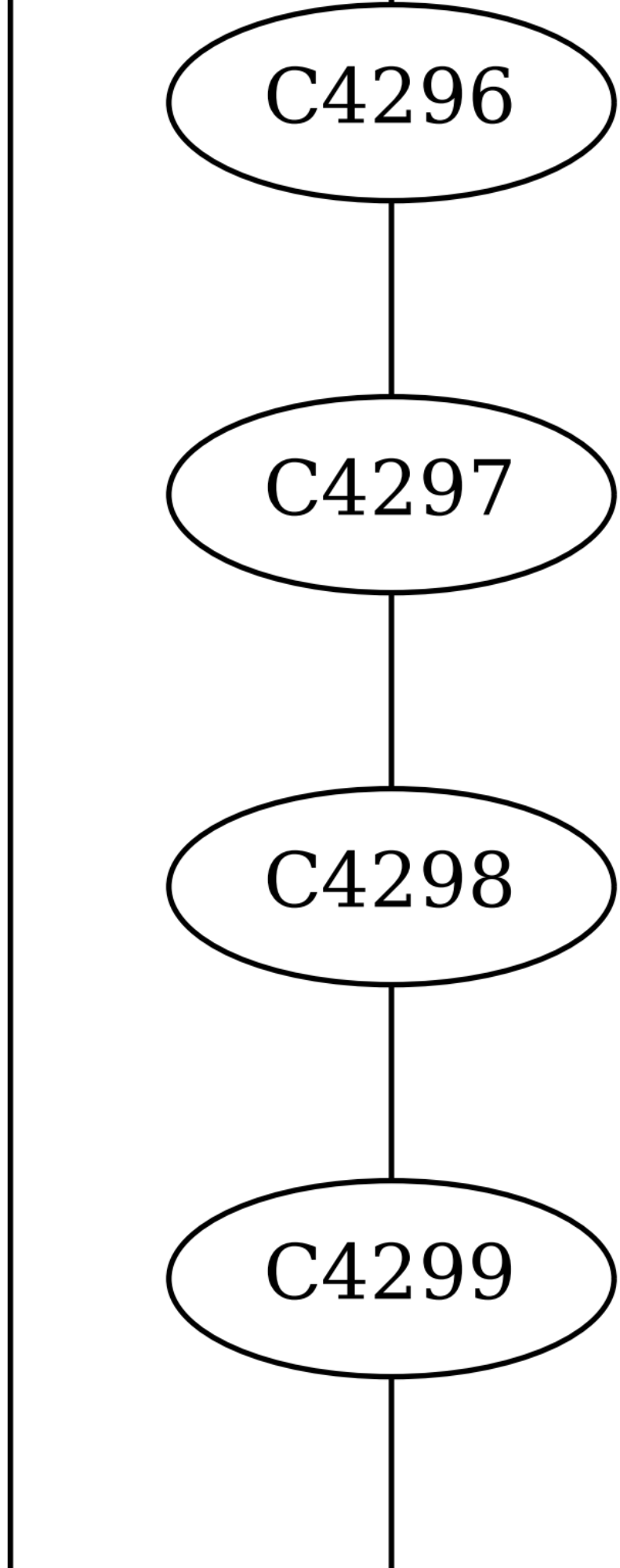
C4296
C4297
C4298
C4299

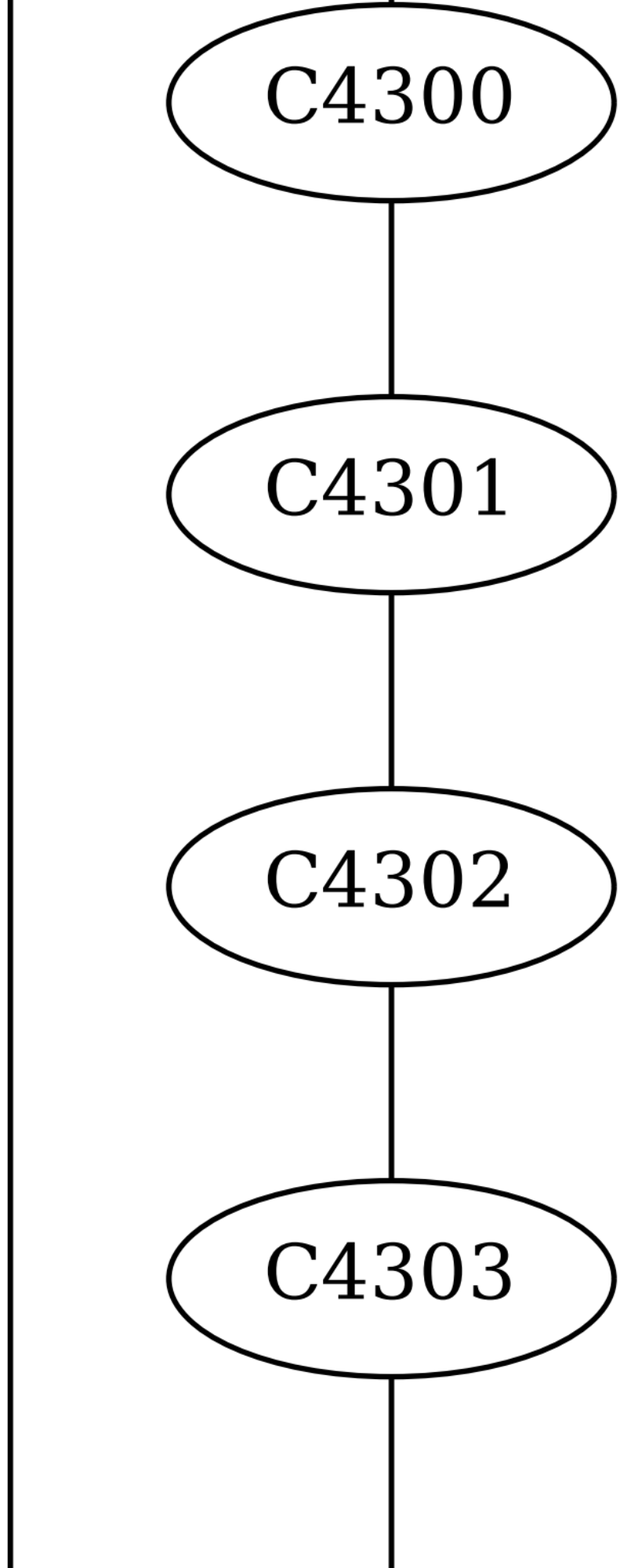
C4300
C4301
C4302
C4303

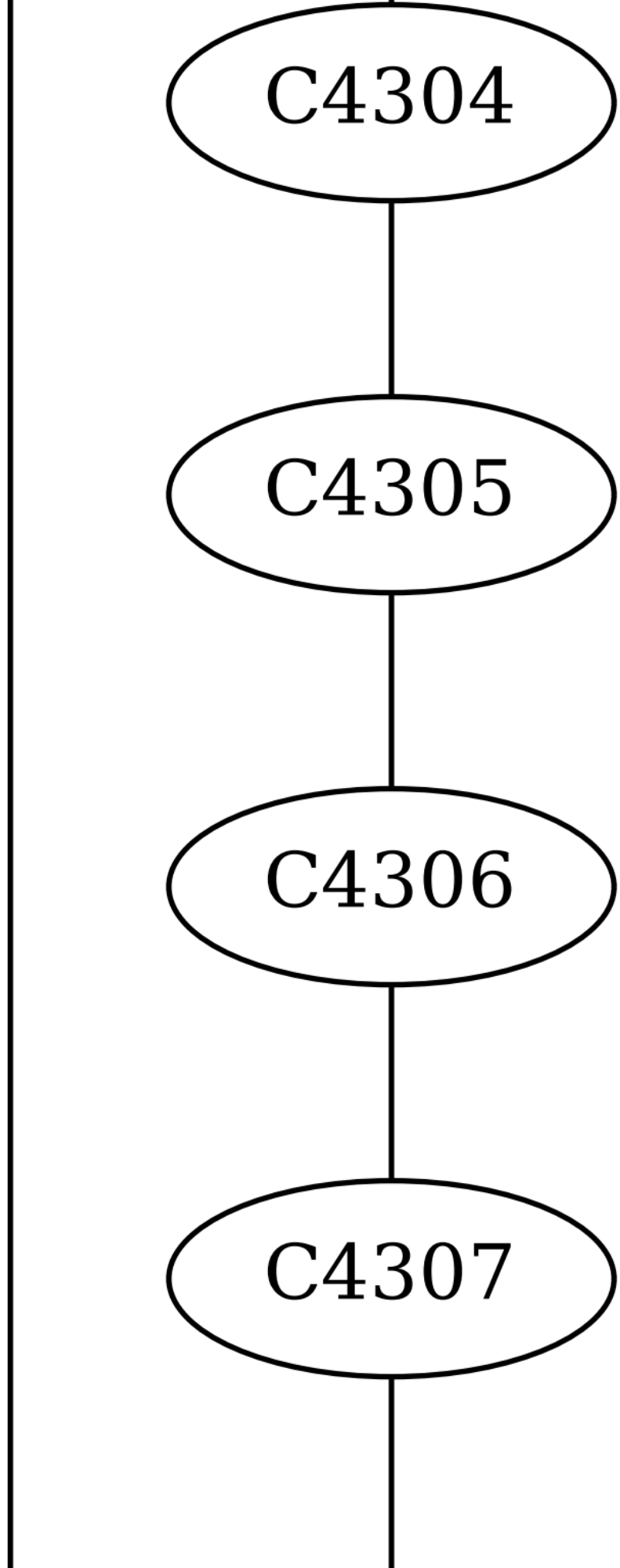
C4304
C4305
C4306
C4307

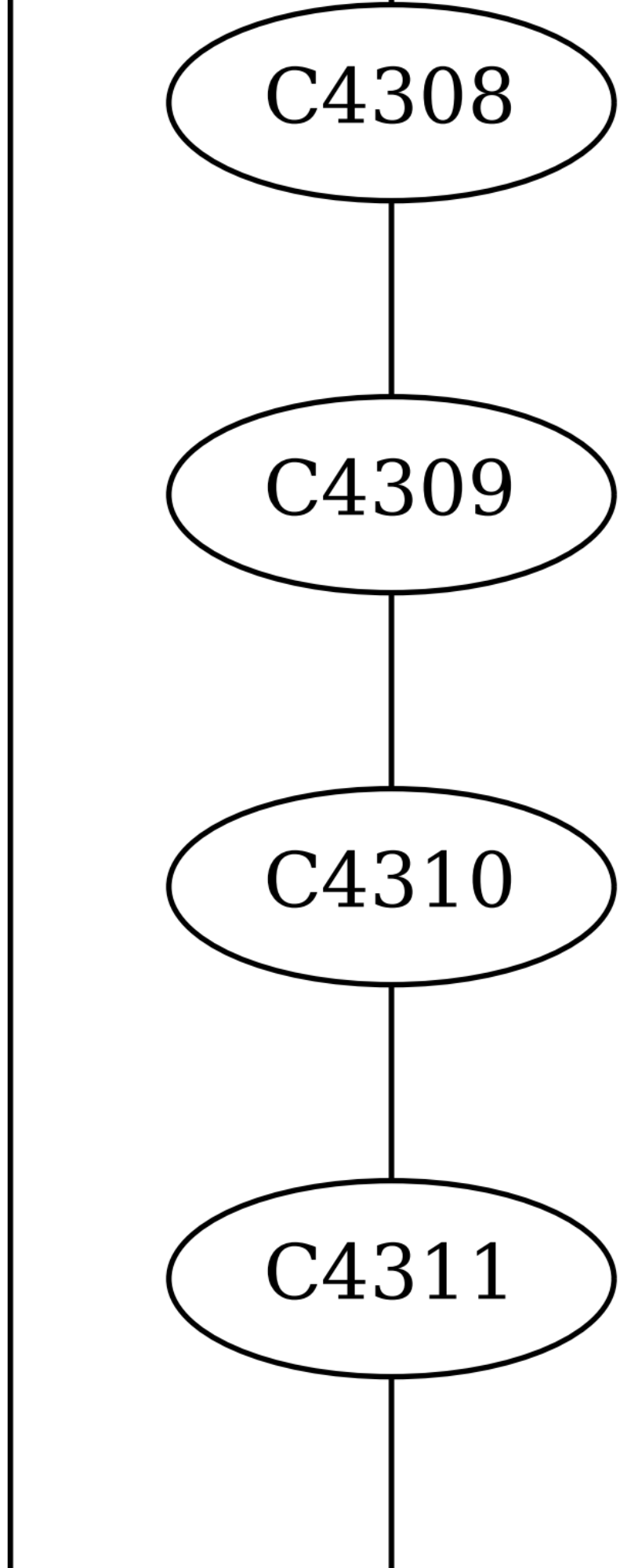
C4308
C4309
C4310
C4311

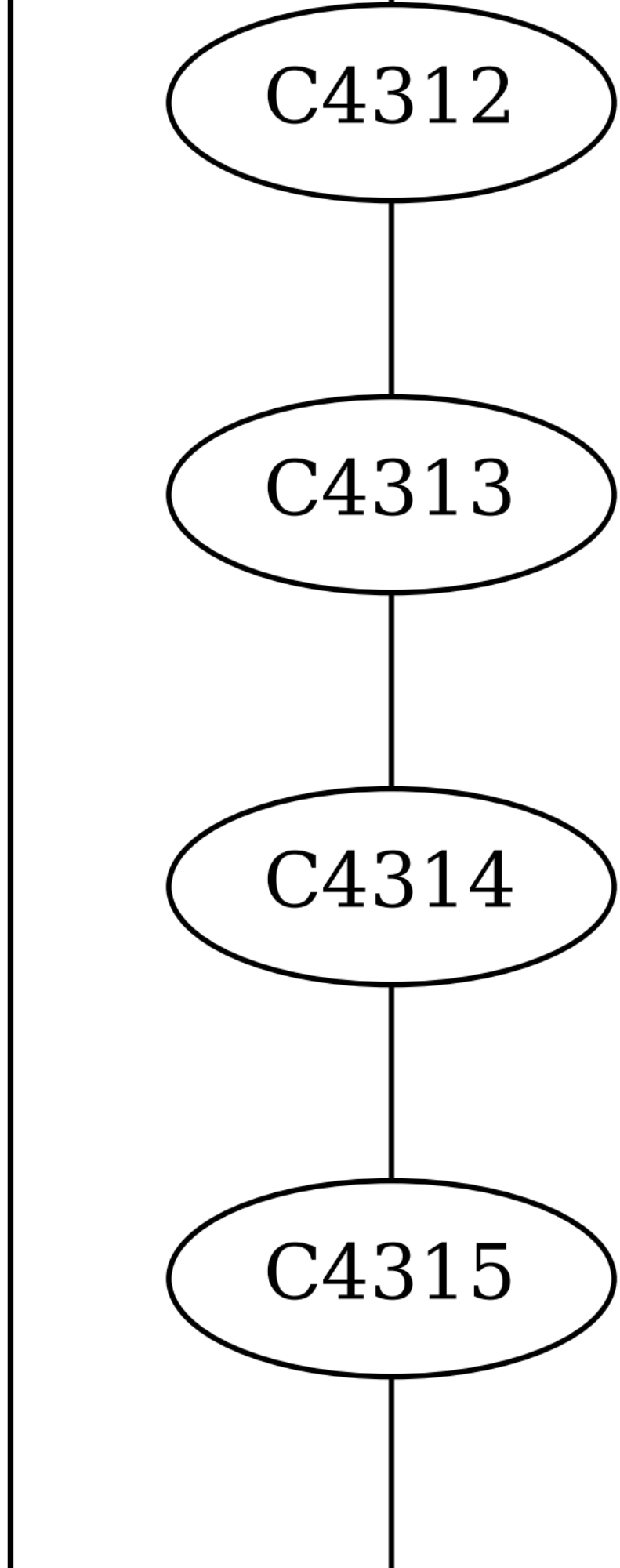
C4312
C4313
C4314
C4315

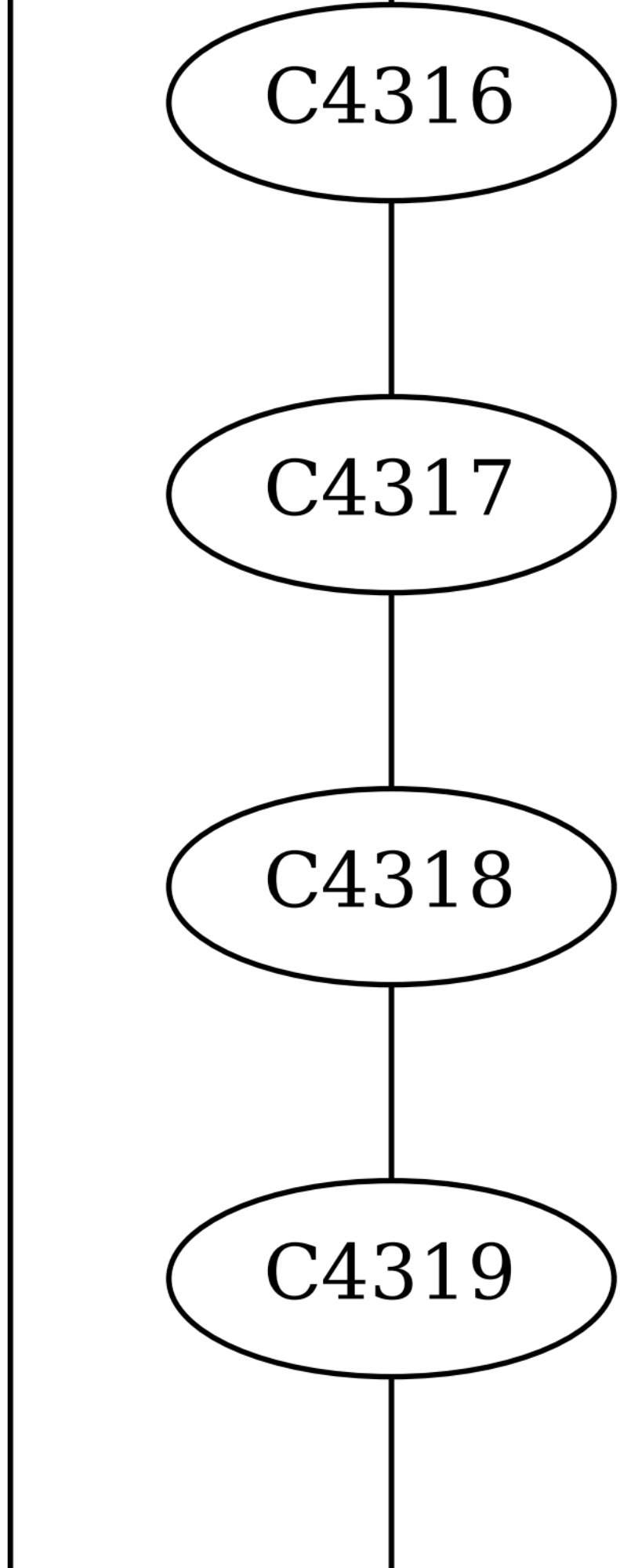
C4316
C4317
C4318
C4319

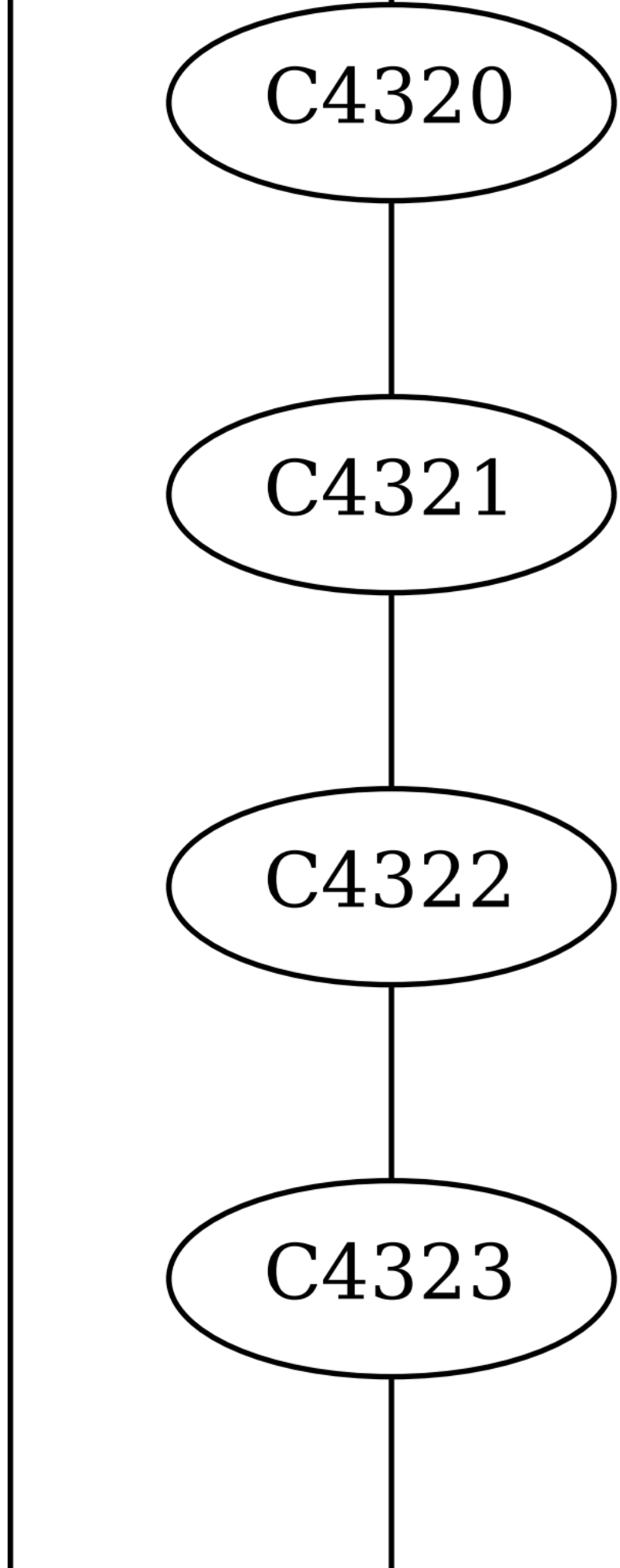
C4320
C4321
C4322
C4323

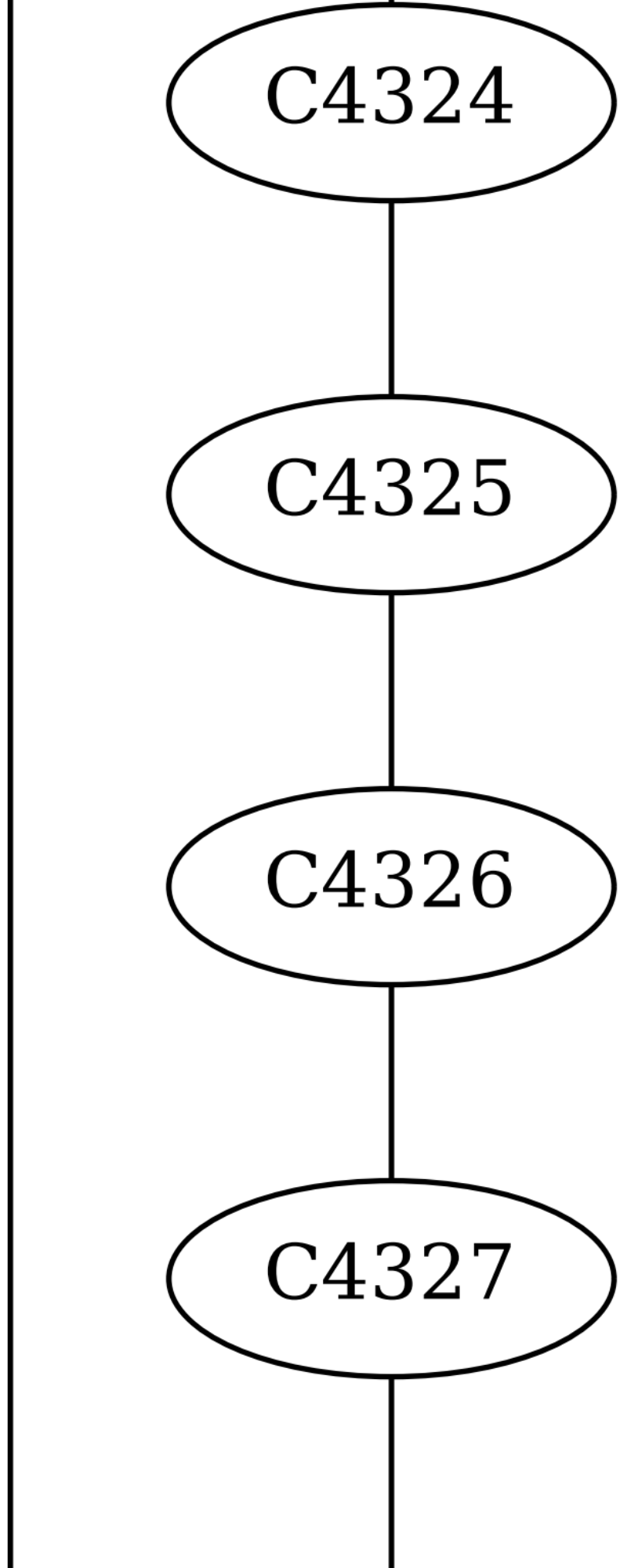
C4324
C4325
C4326
C4327

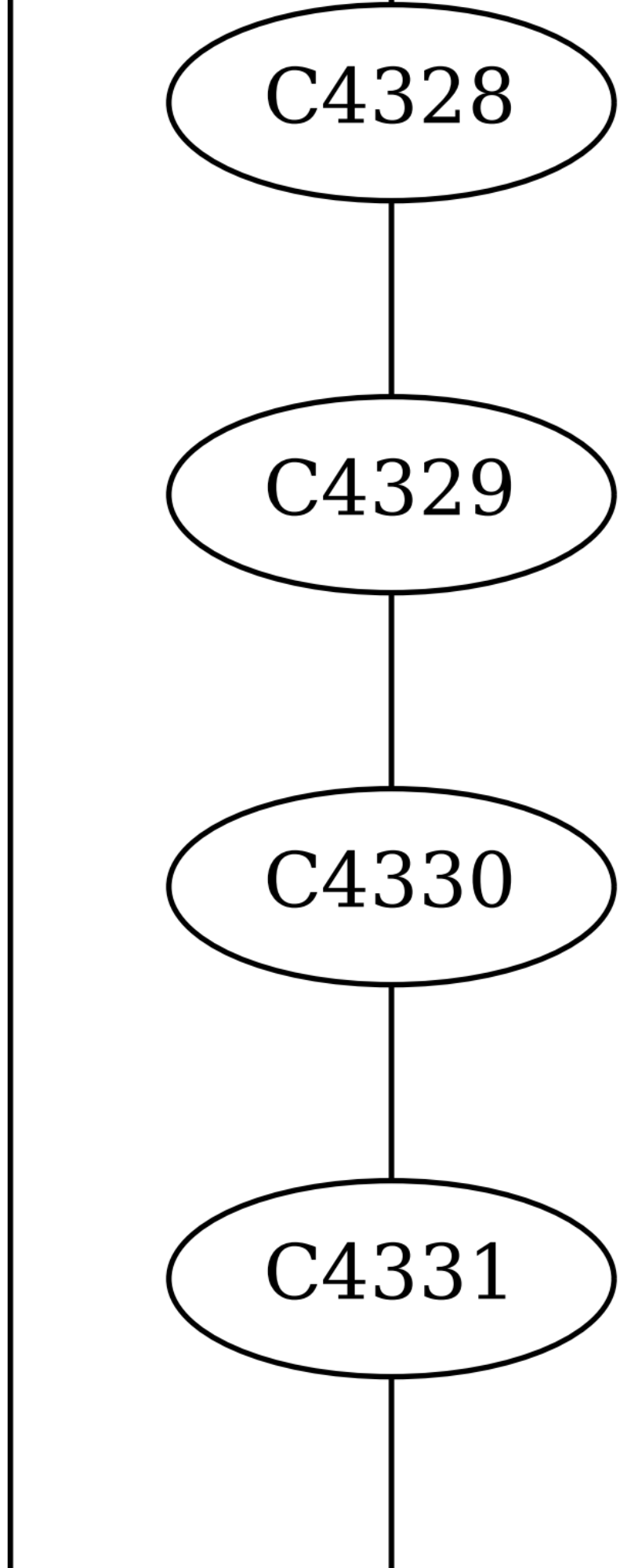
C4328
C4329
C4330
C4331

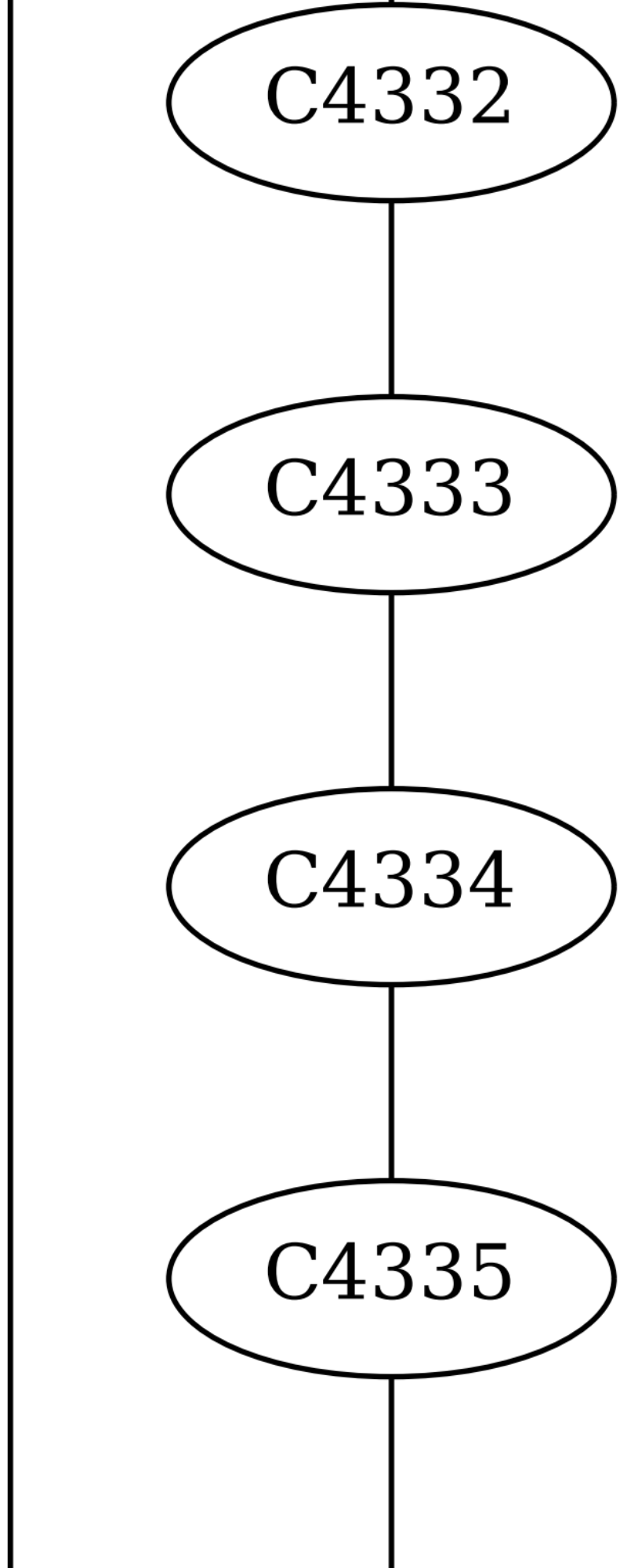
C4332
C4333
C4334
C4335

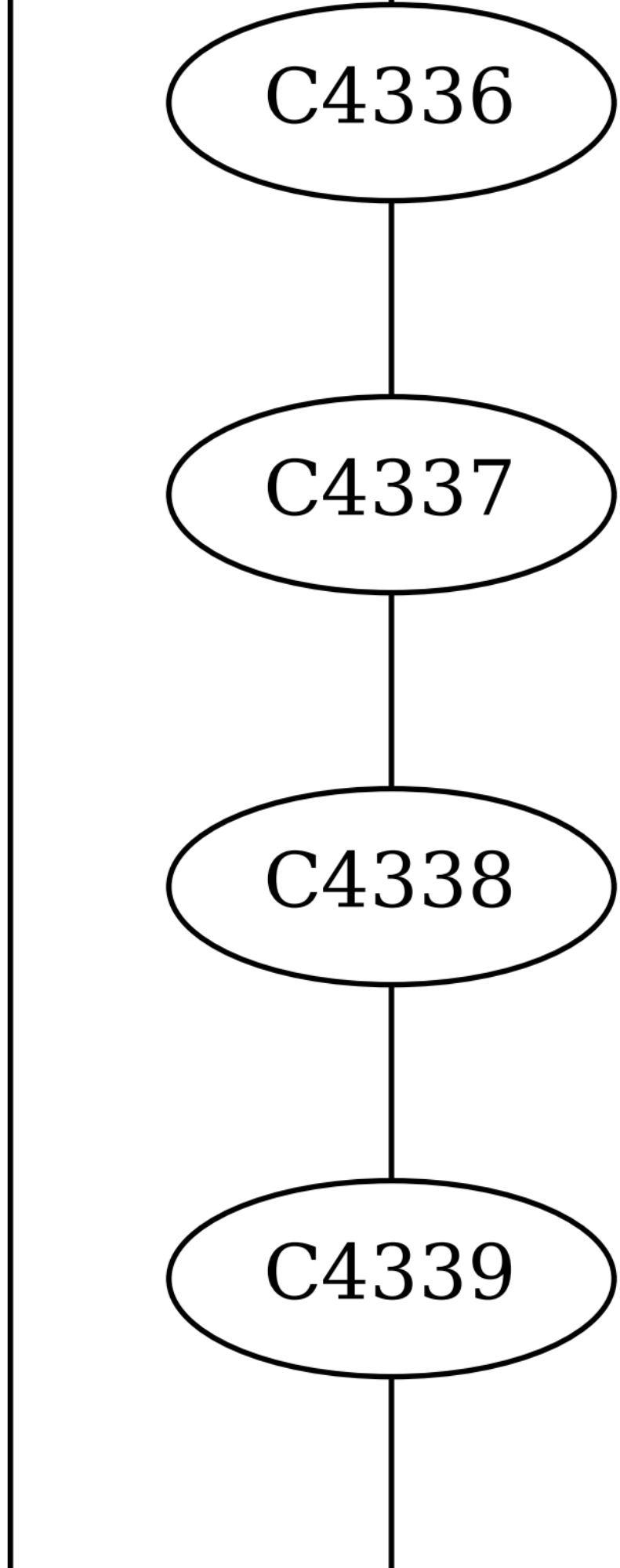
C4336
C4337
C4338
C4339

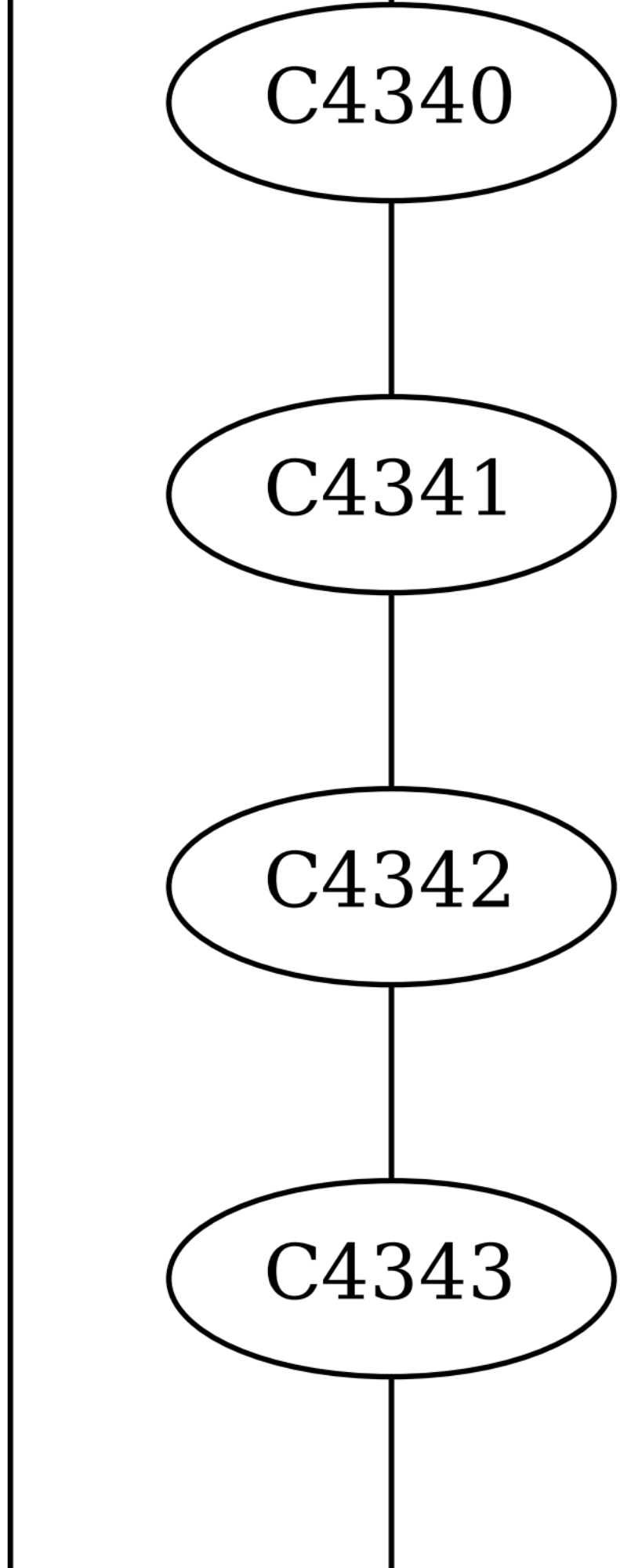
C4340
C4341
C4342
C4343

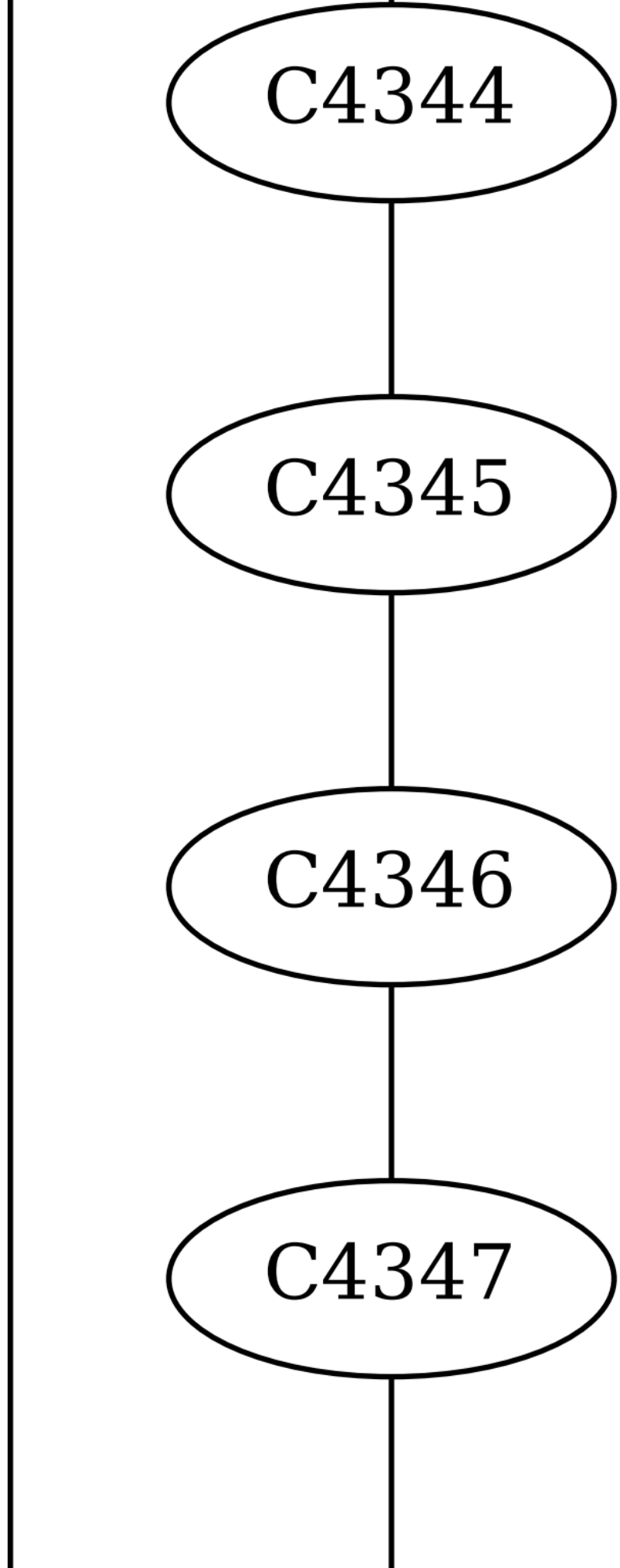
C4344
C4345
C4346
C4347

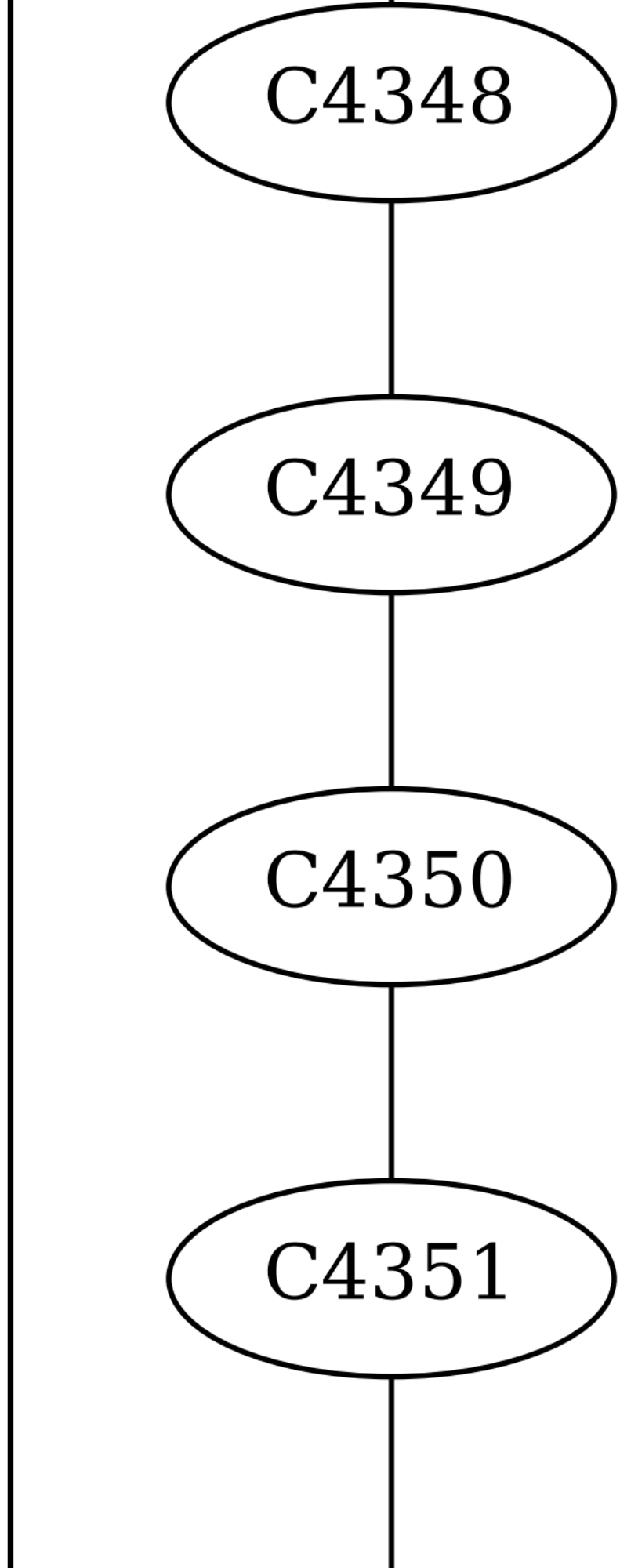
C4348
C4349
C4350
C4351

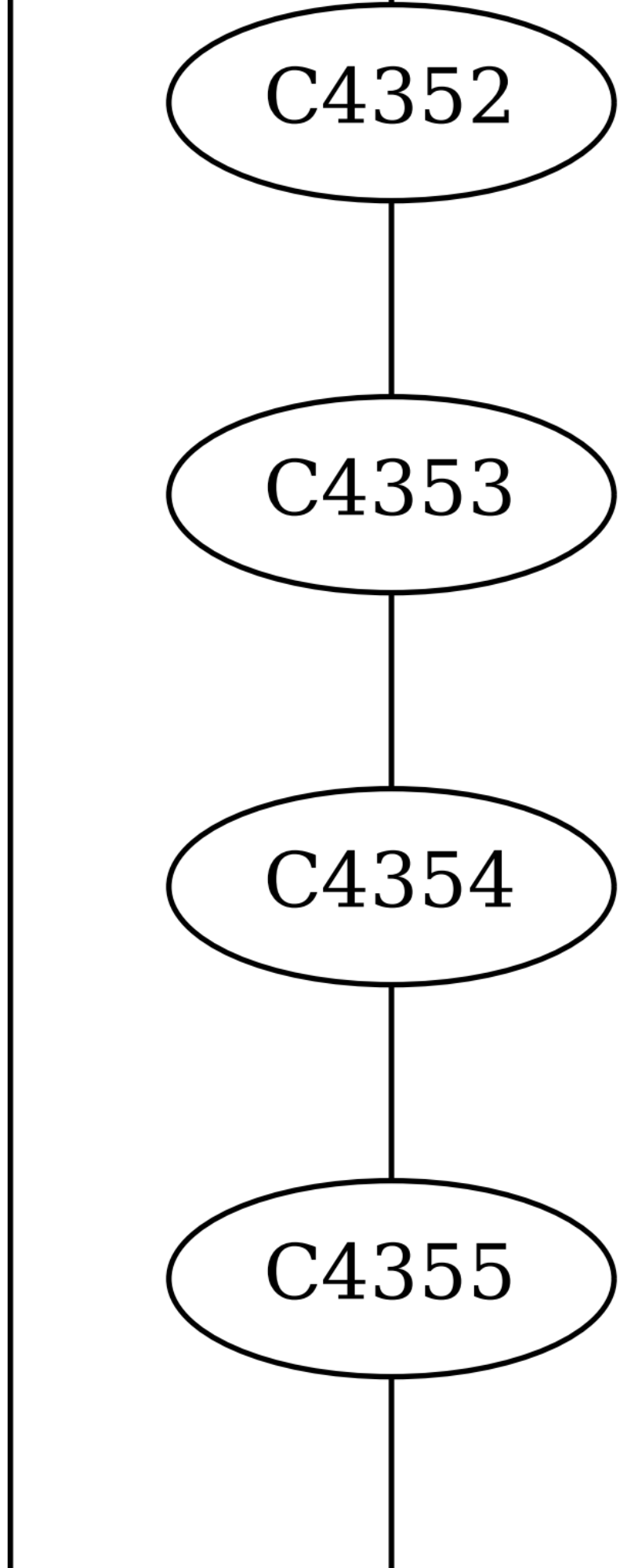
C4352
C4353
C4354
C4355

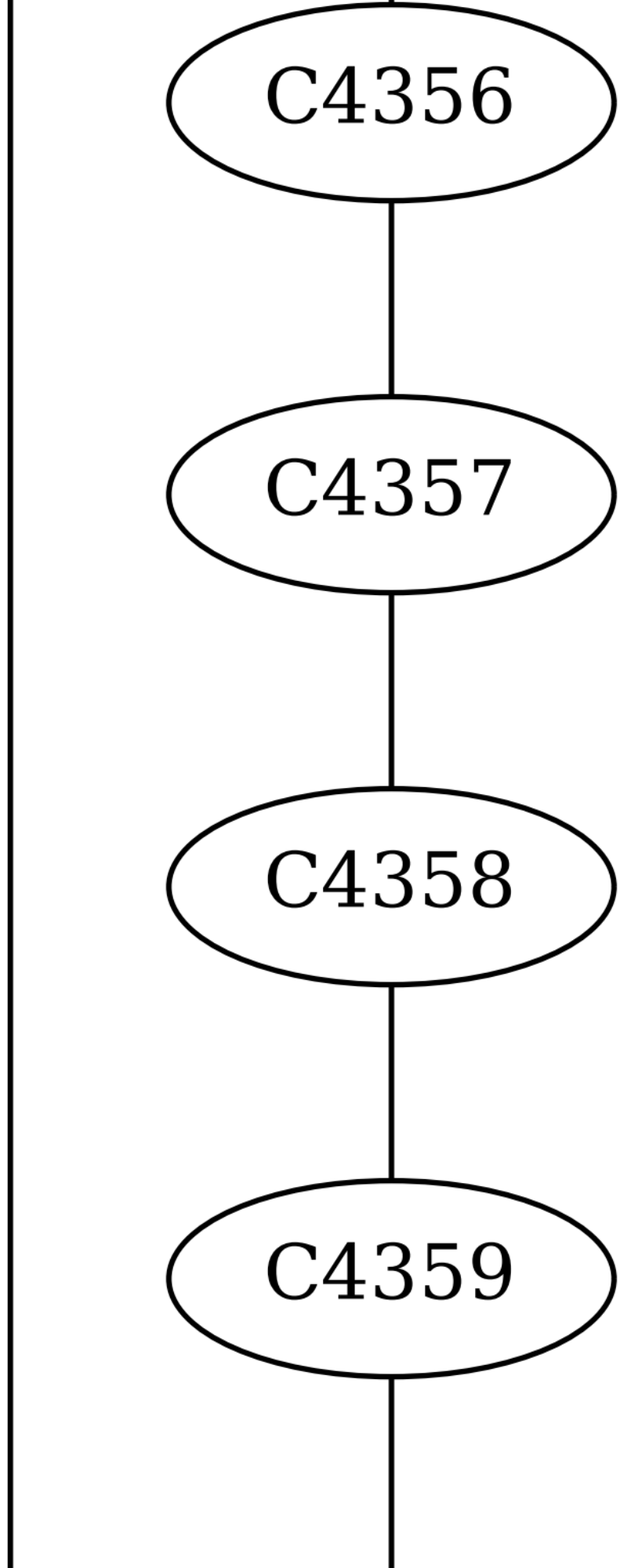
C4356
C4357
C4358
C4359

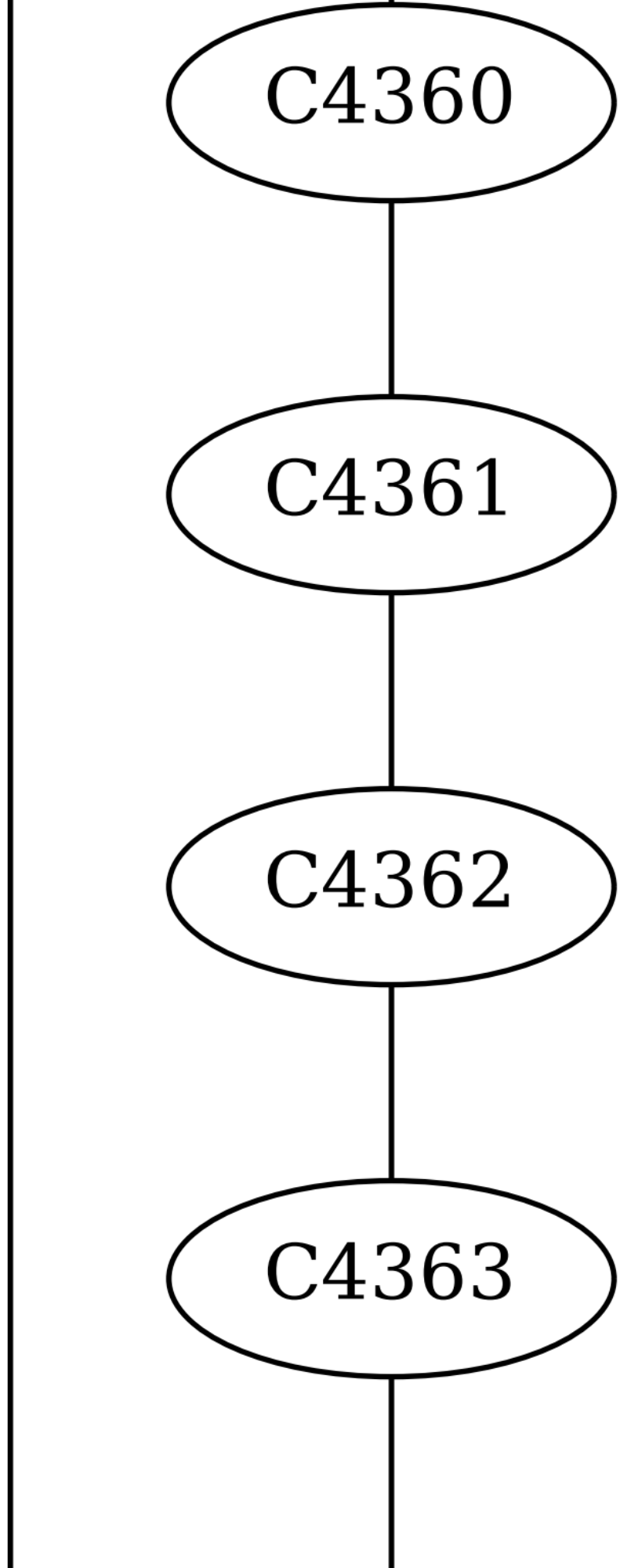
C4360
C4361
C4362
C4363

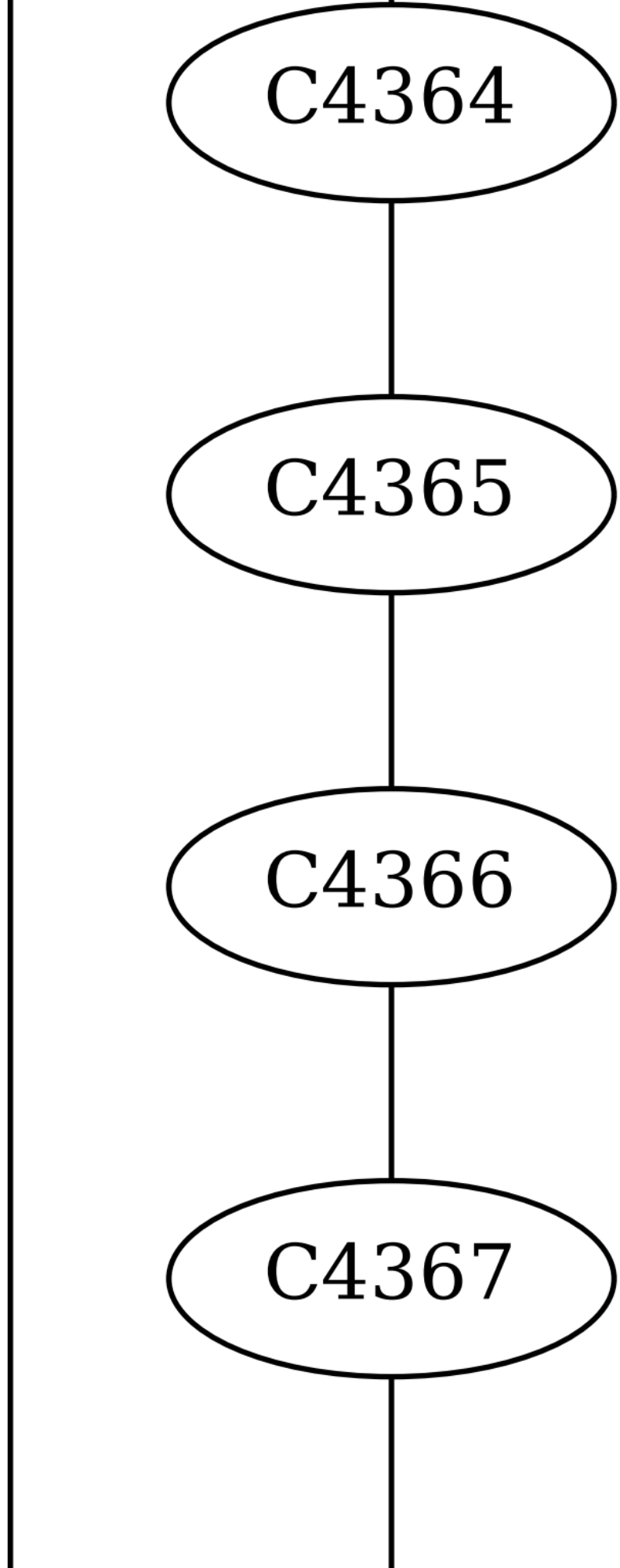
C4364
C4365
C4366
C4367

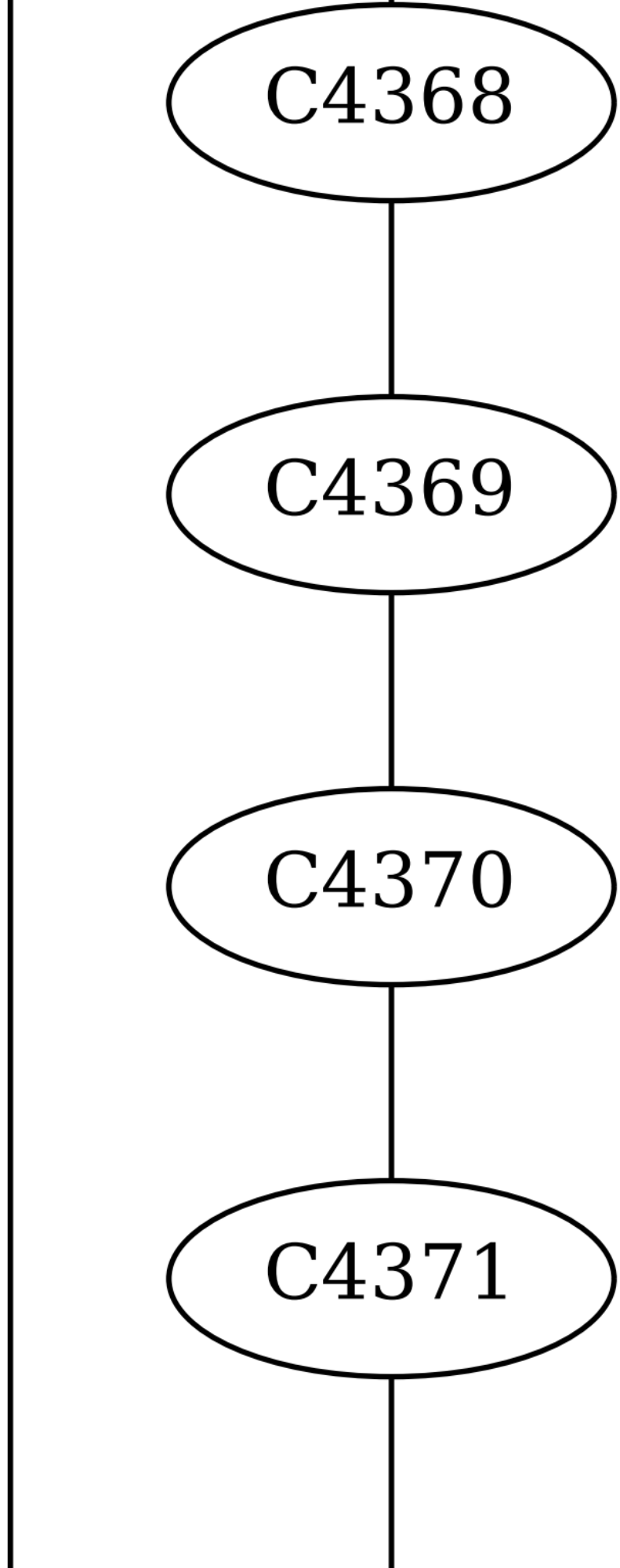
C4368
C4369
C4370
C4371

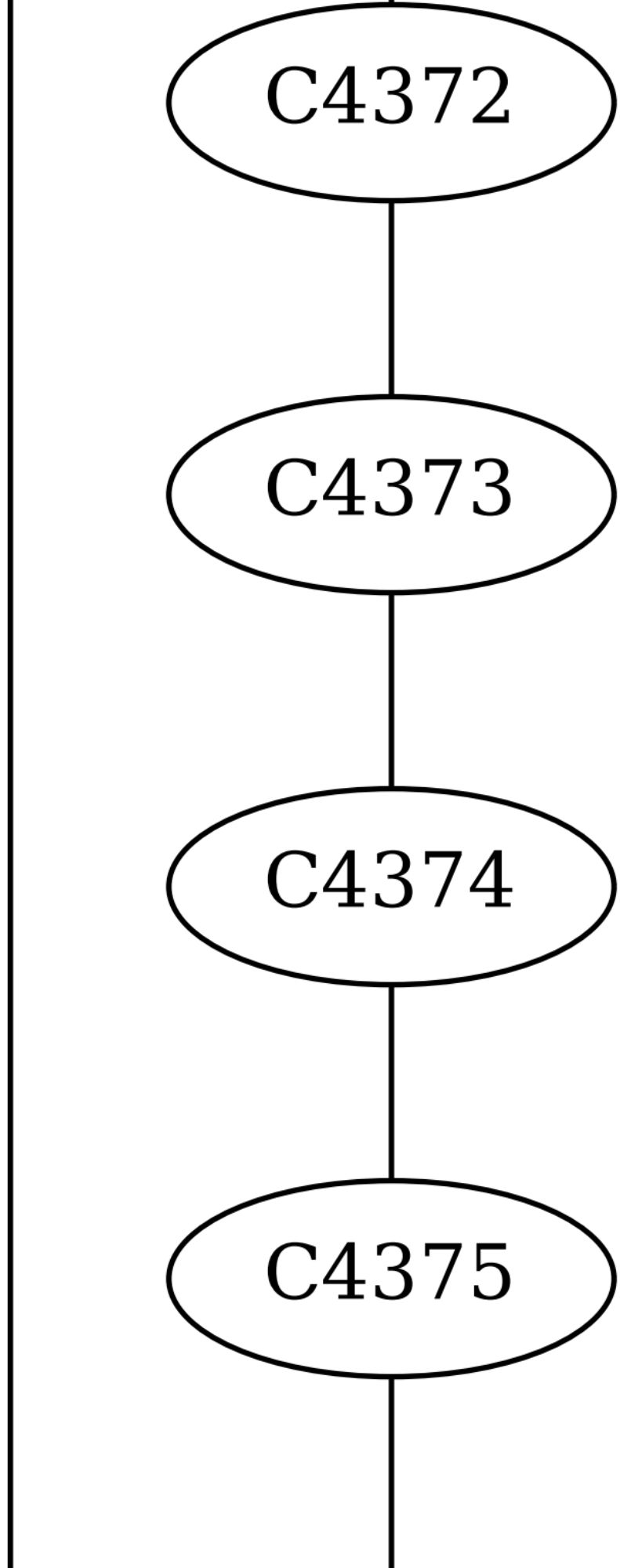
C4372
C4373
C4374
C4375

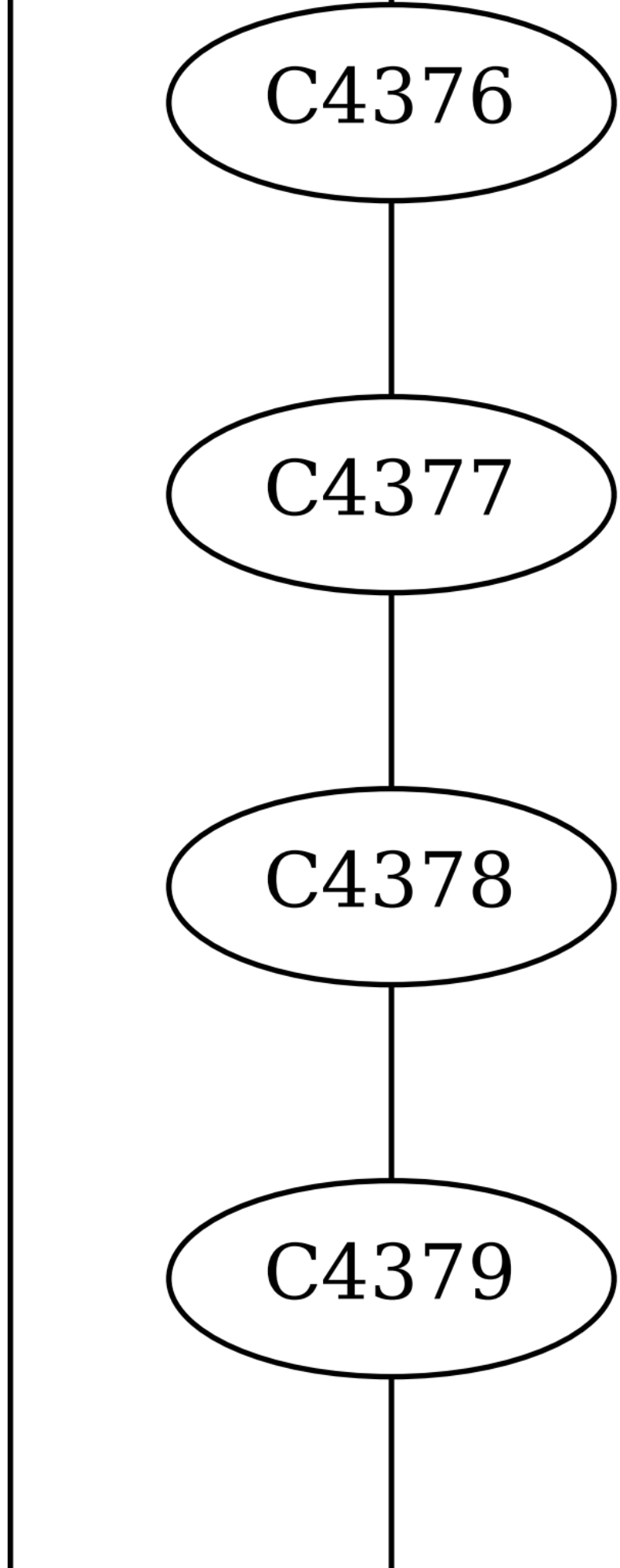
C4376
C4377
C4378
C4379

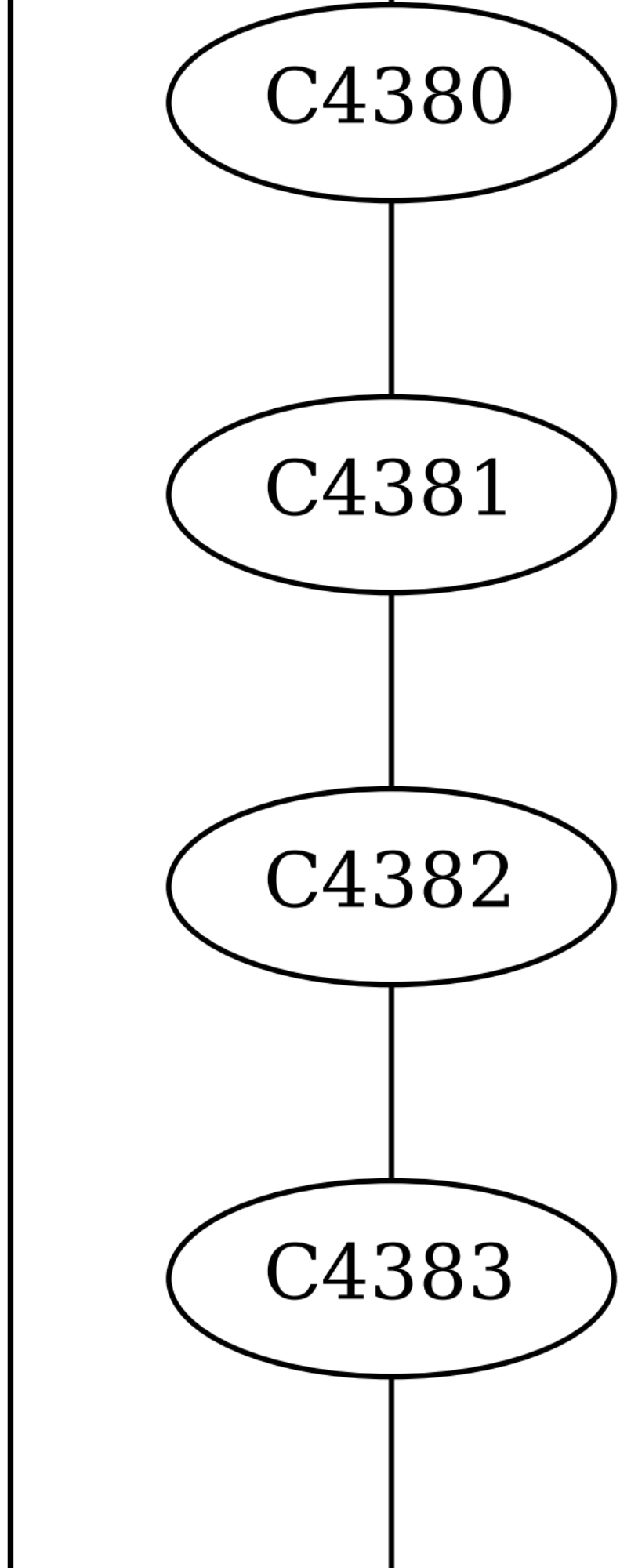
C4380
C4381
C4382
C4383

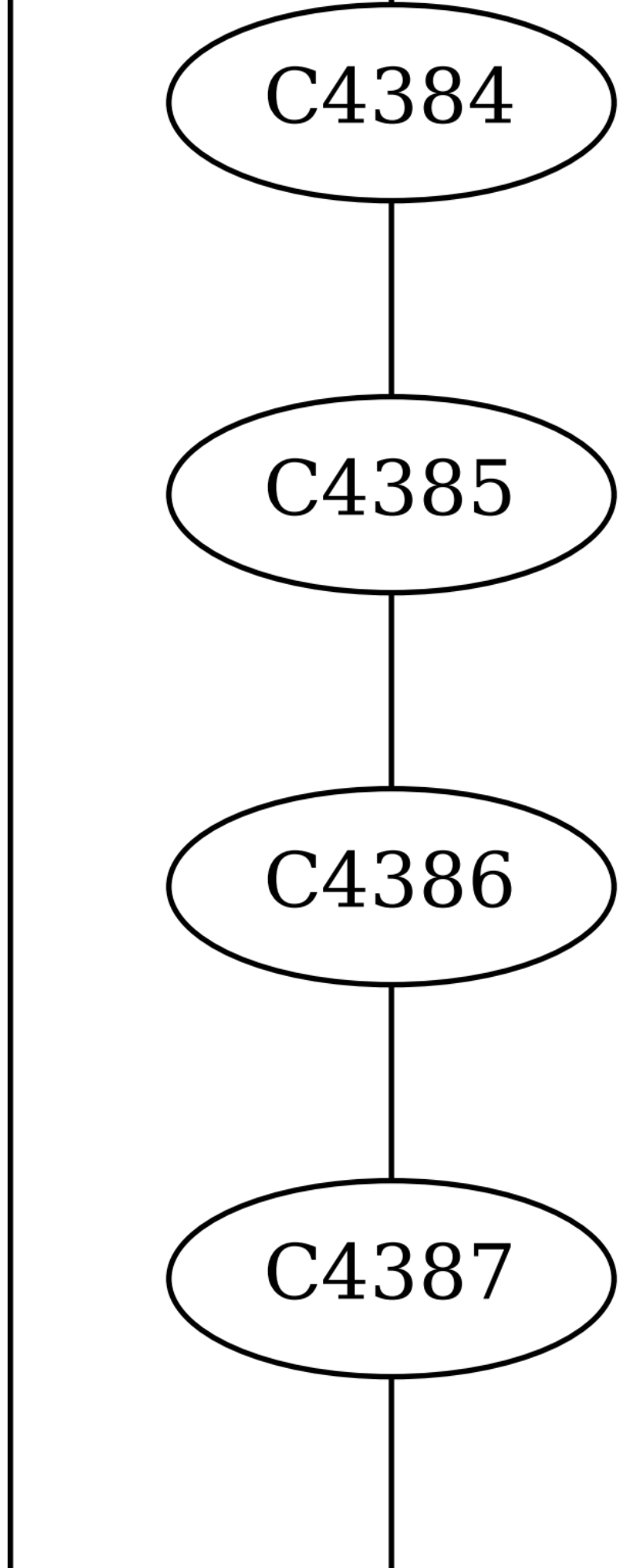
C4384
C4385
C4386
C4387

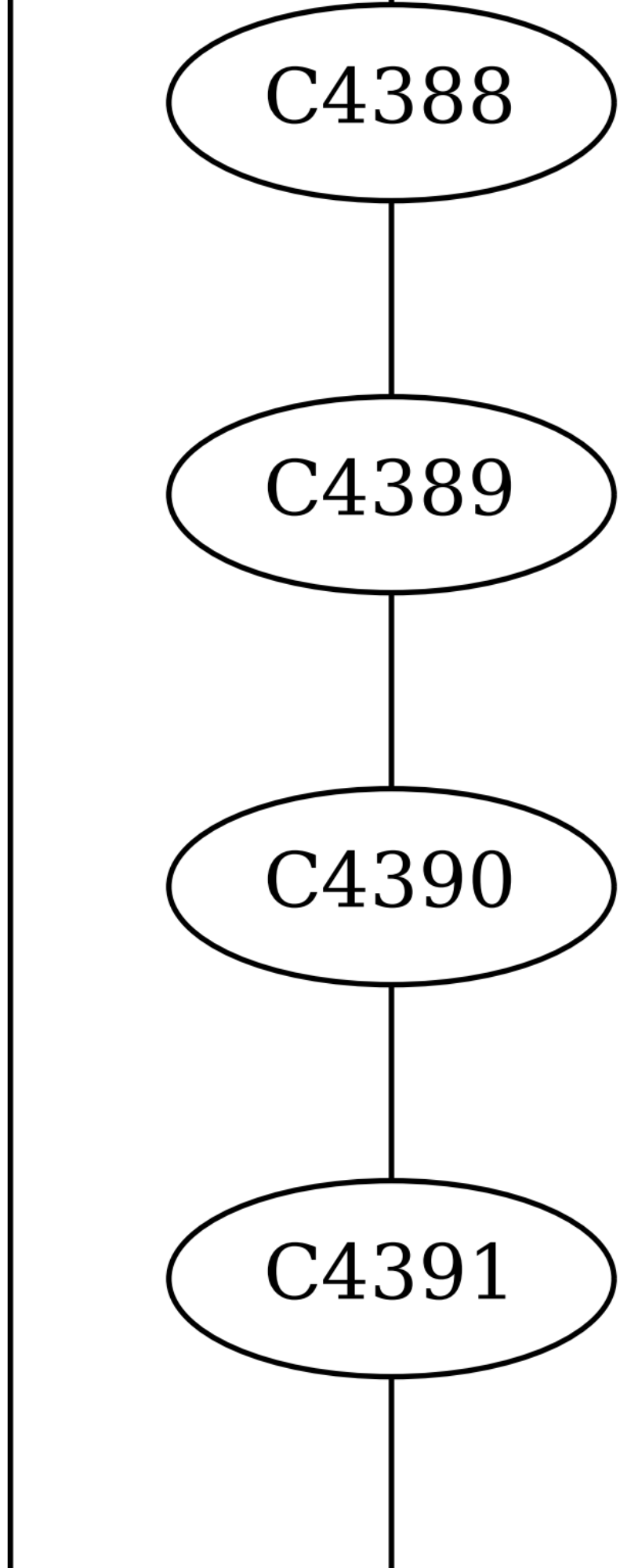
C4388
C4389
C4390
C4391

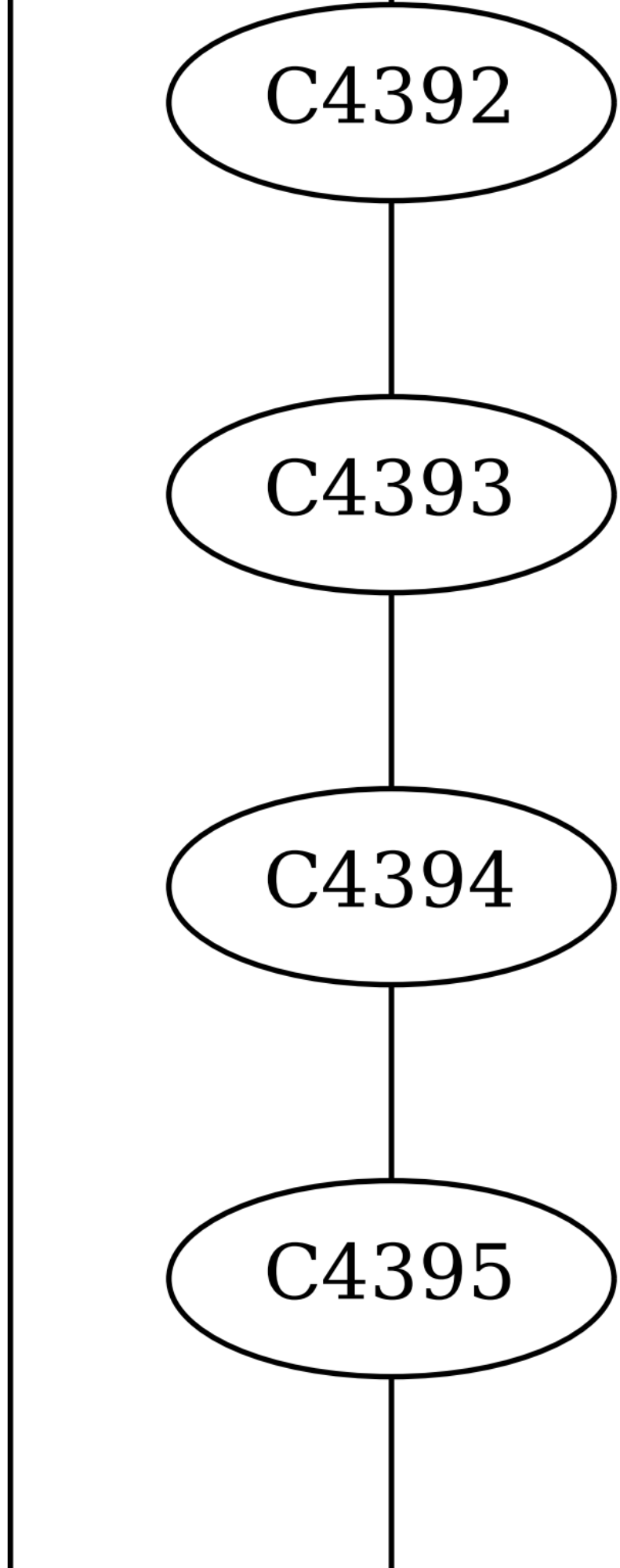
C4392
C4393
C4394
C4395

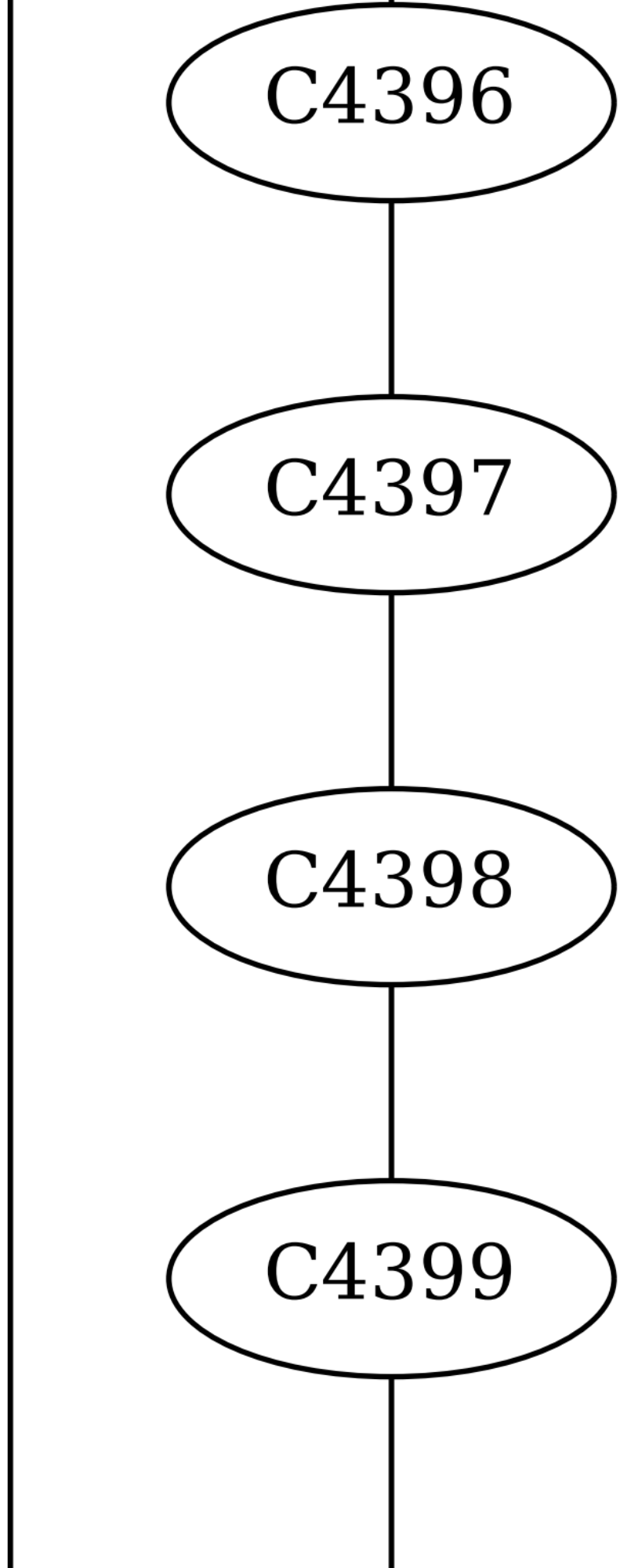
C4396
C4397
C4398
C4399

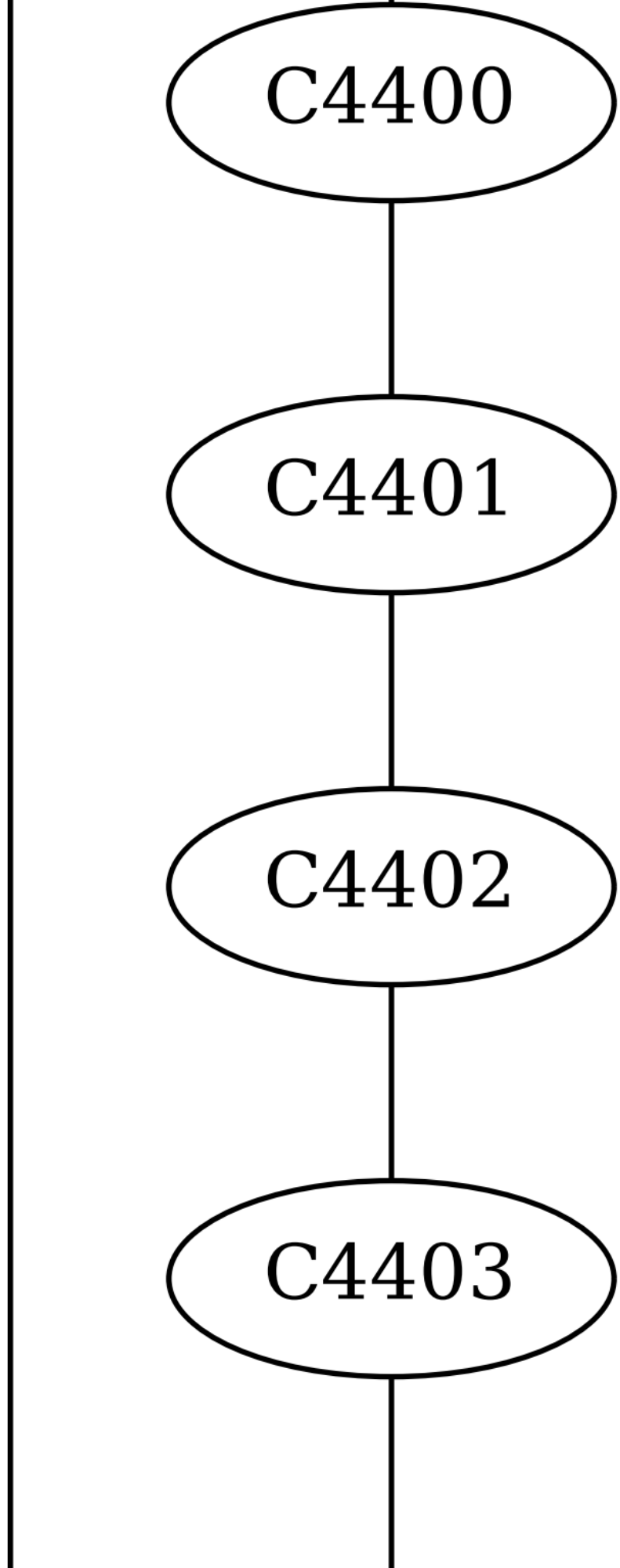
C4400
C4401
C4402
C4403

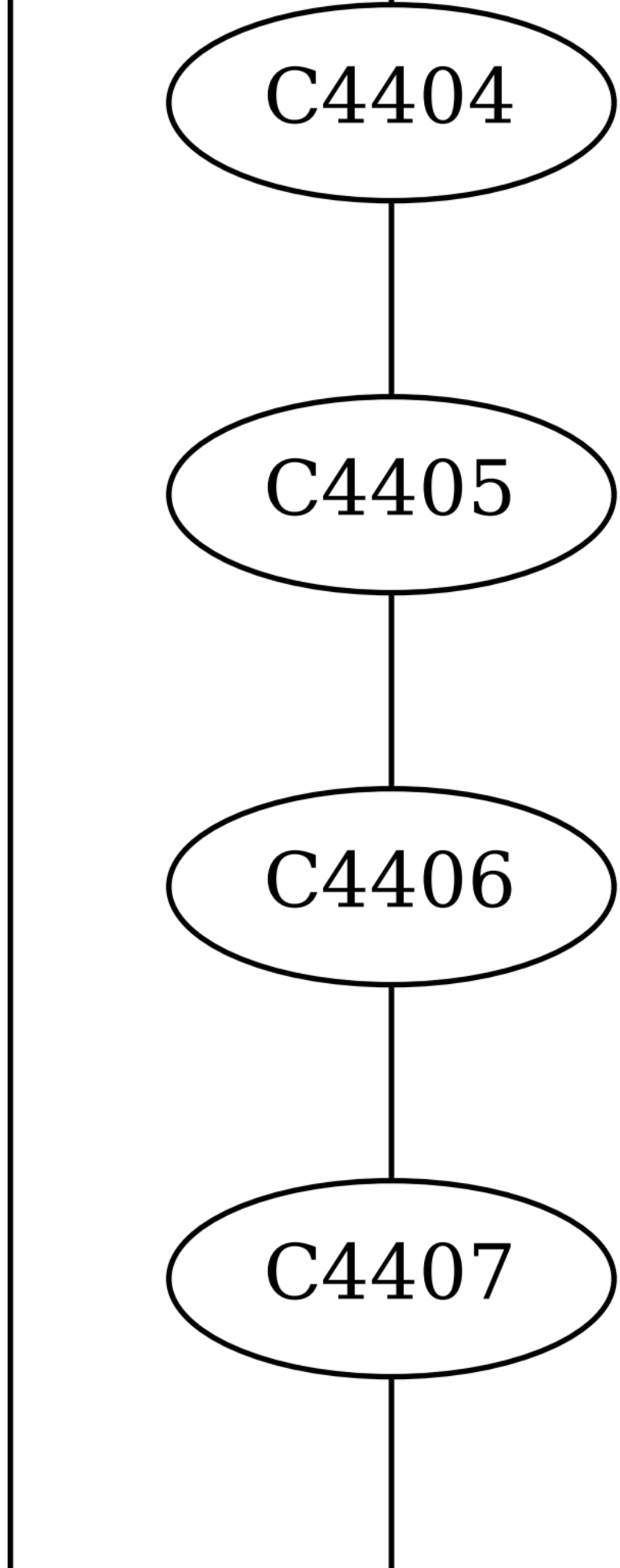
C4404
C4405
C4406
C4407

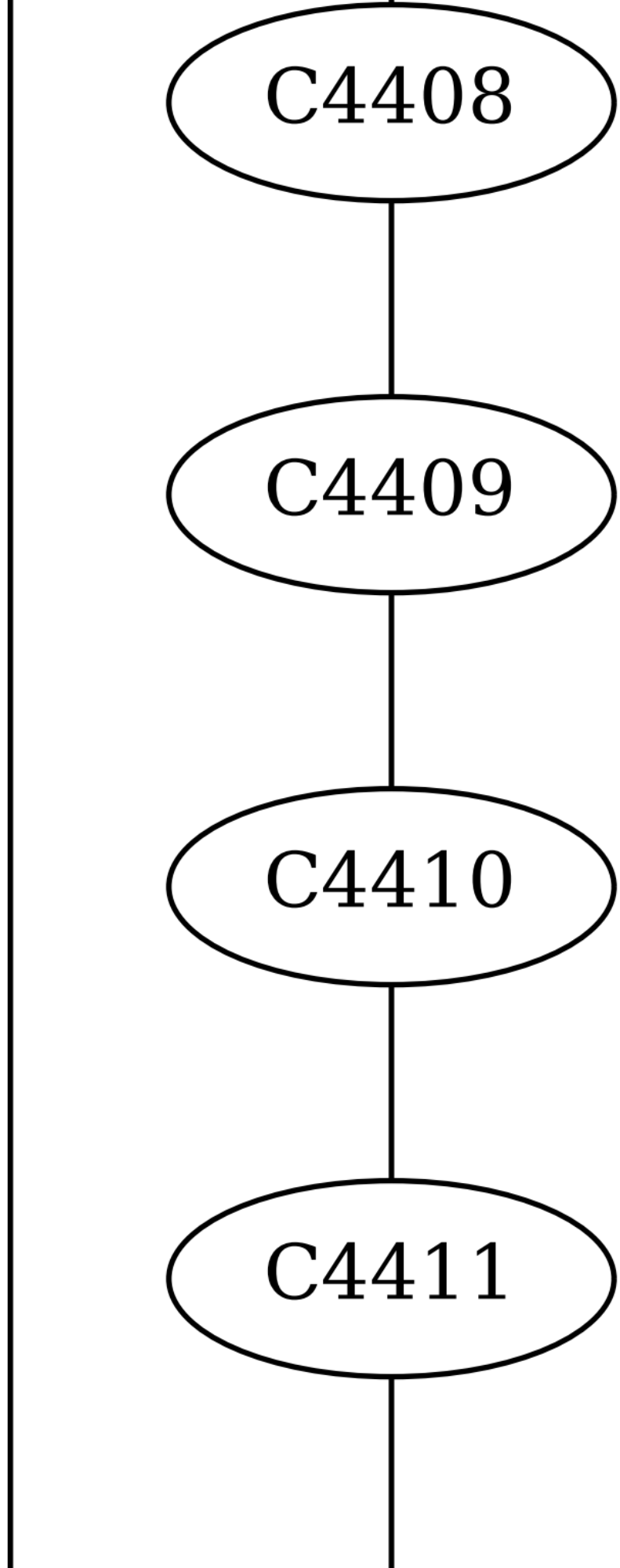
C4408
C4409
C4410
C4411

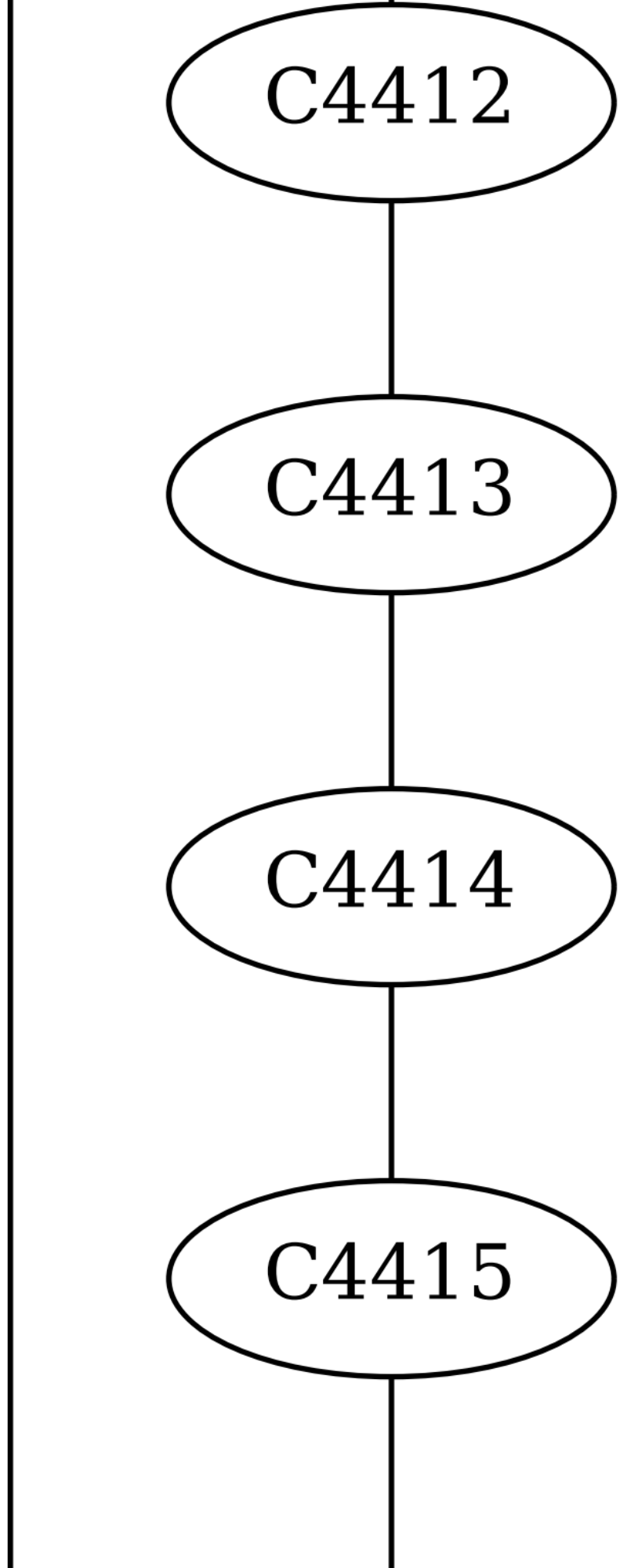
C4412
C4413
C4414
C4415

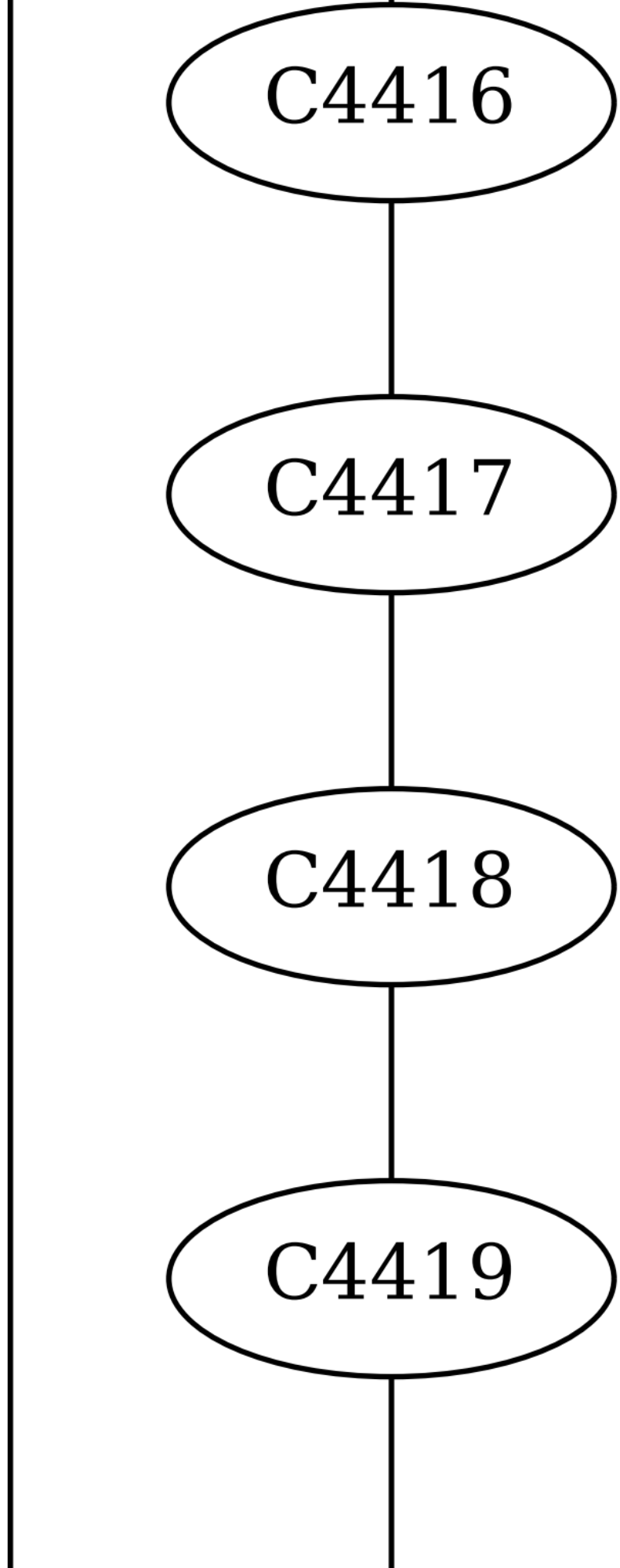
C4416
C4417
C4418
C4419

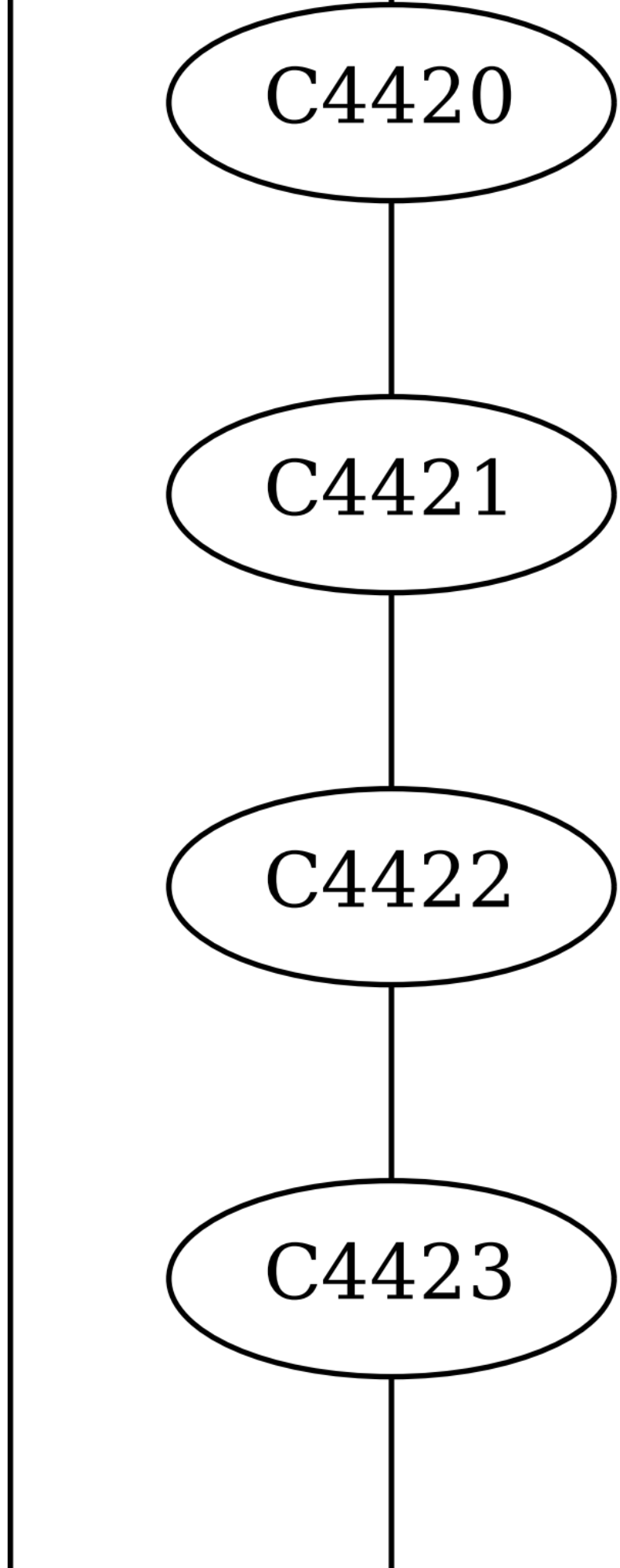
C4420
C4421
C4422
C4423

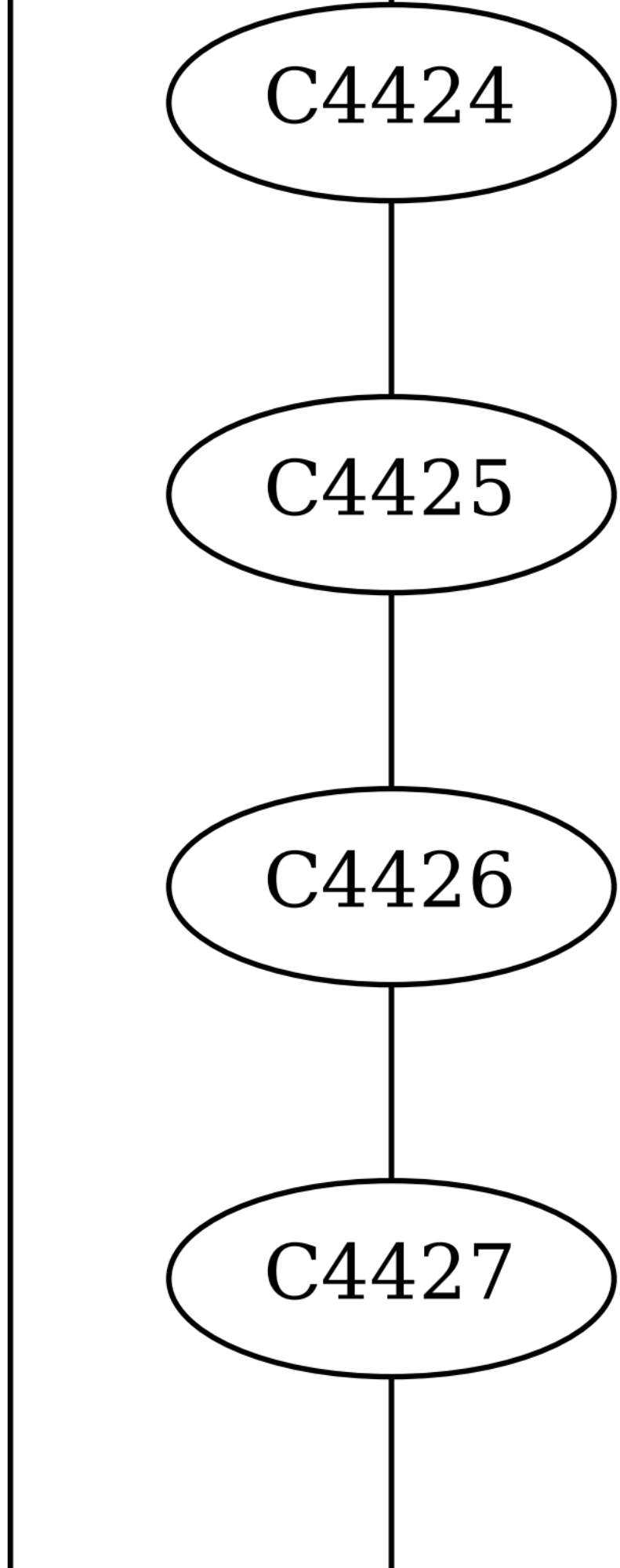
C4424
C4425
C4426
C4427

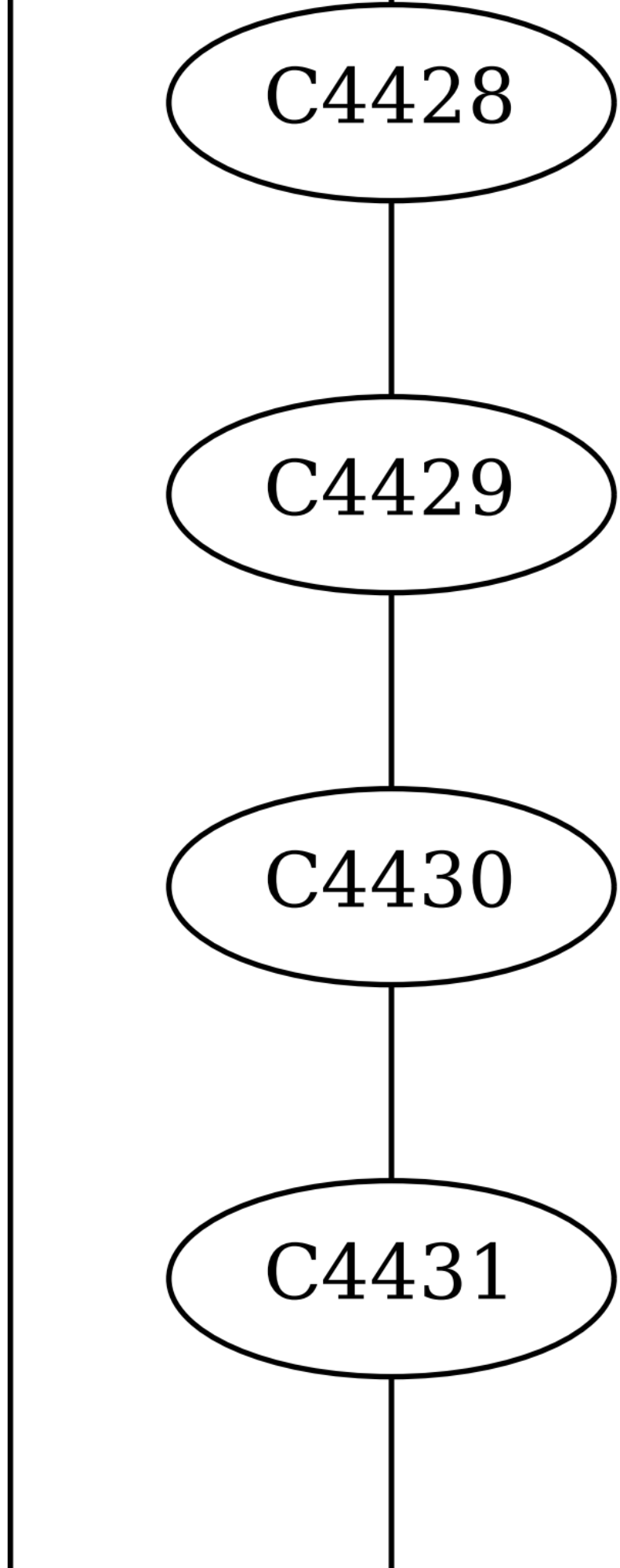
C4428
C4429
C4430
C4431

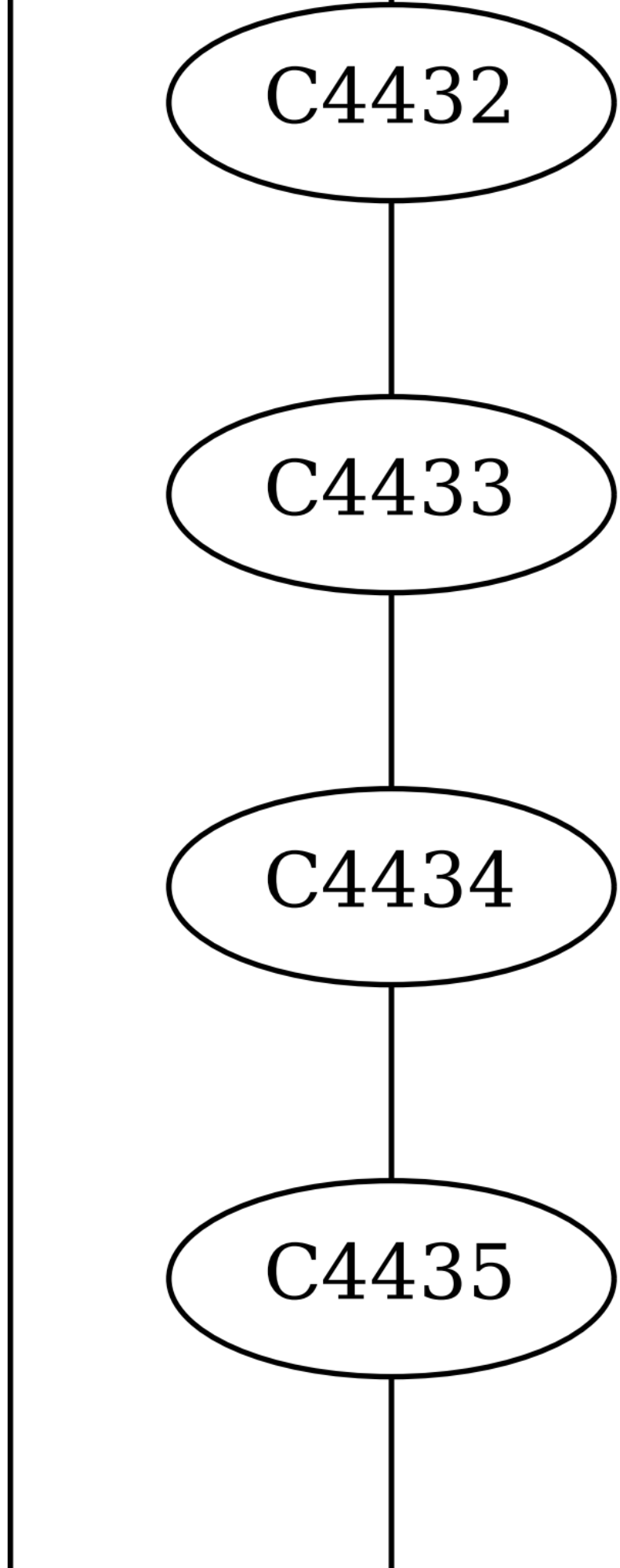
C4432
C4433
C4434
C4435

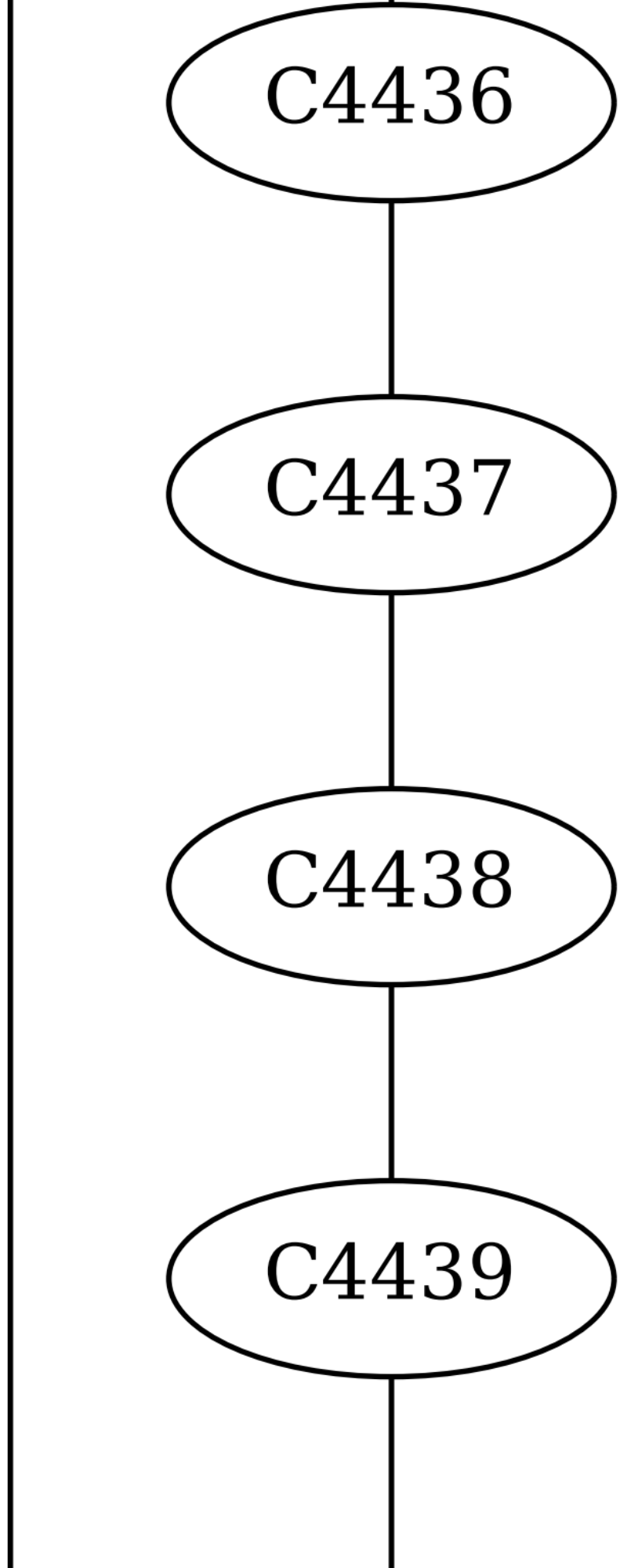
C4436
C4437
C4438
C4439

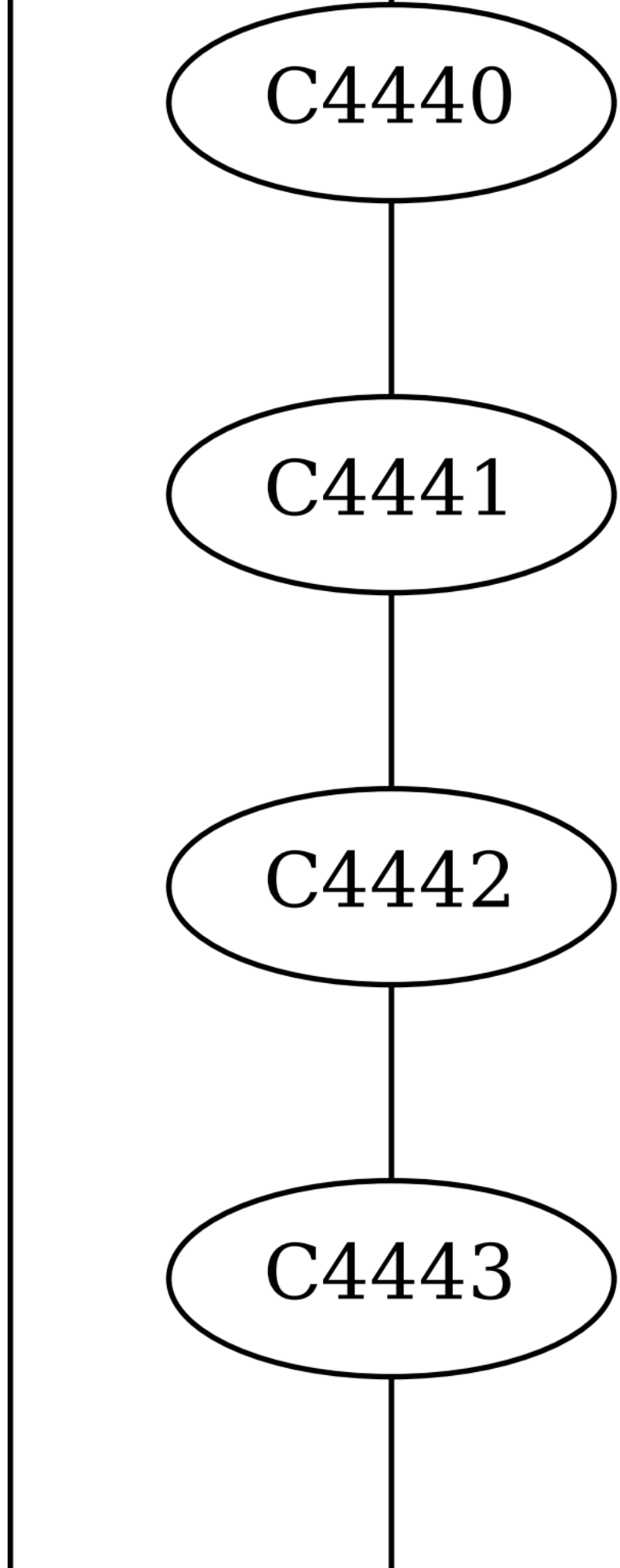
C4440
C4441
C4442
C4443

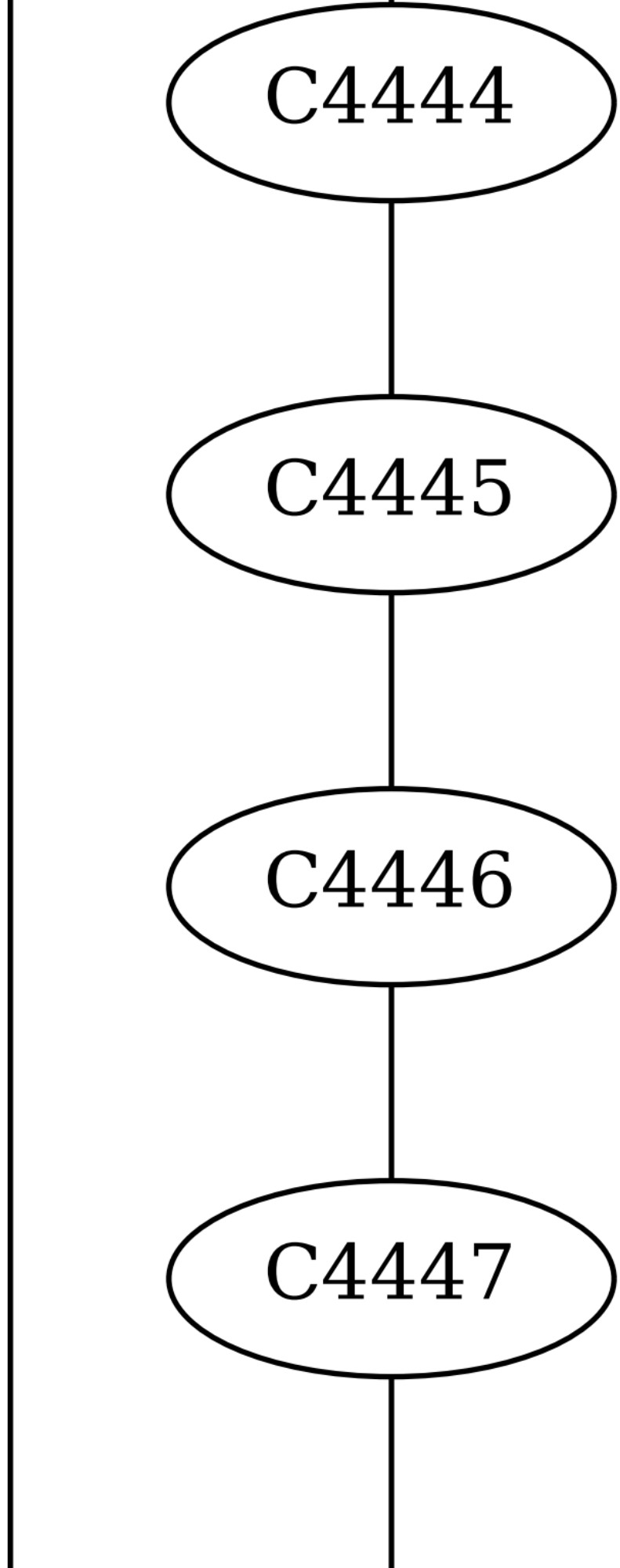
C4444
C4445
C4446
C4447

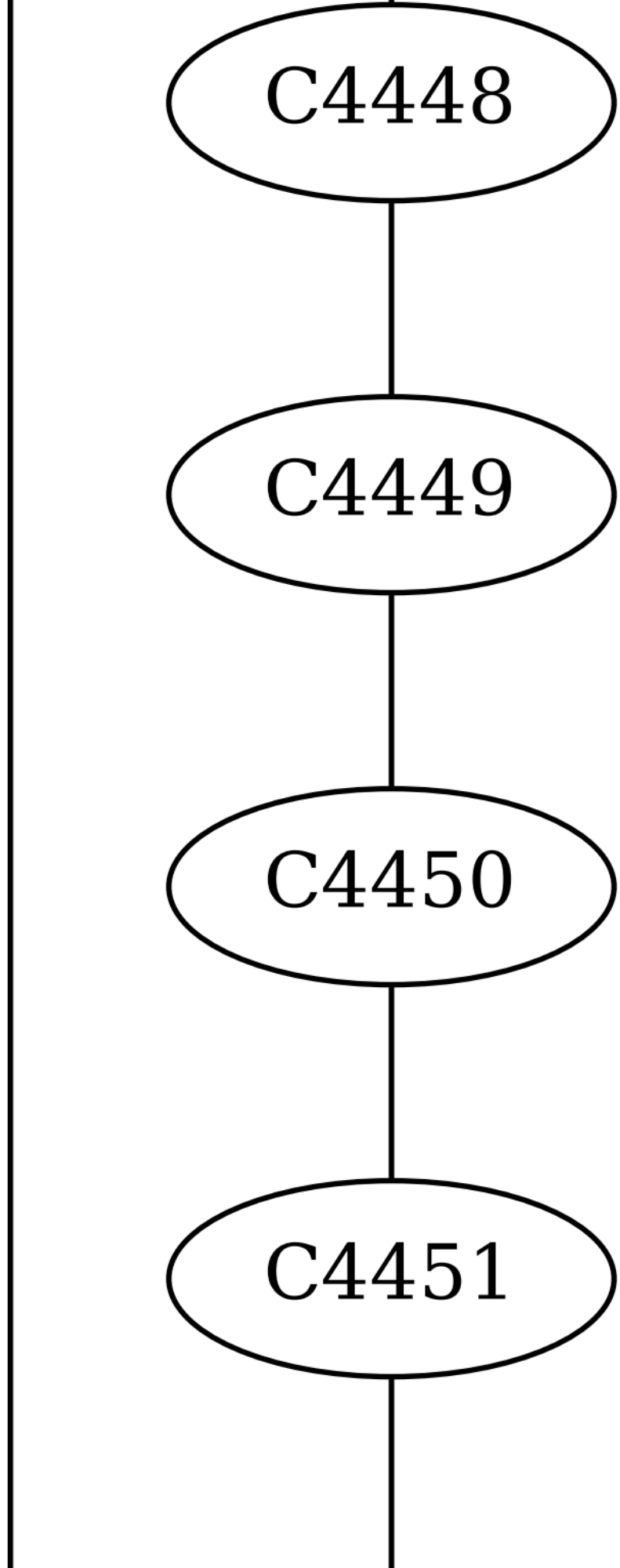
C4448
C4449
C4450
C4451

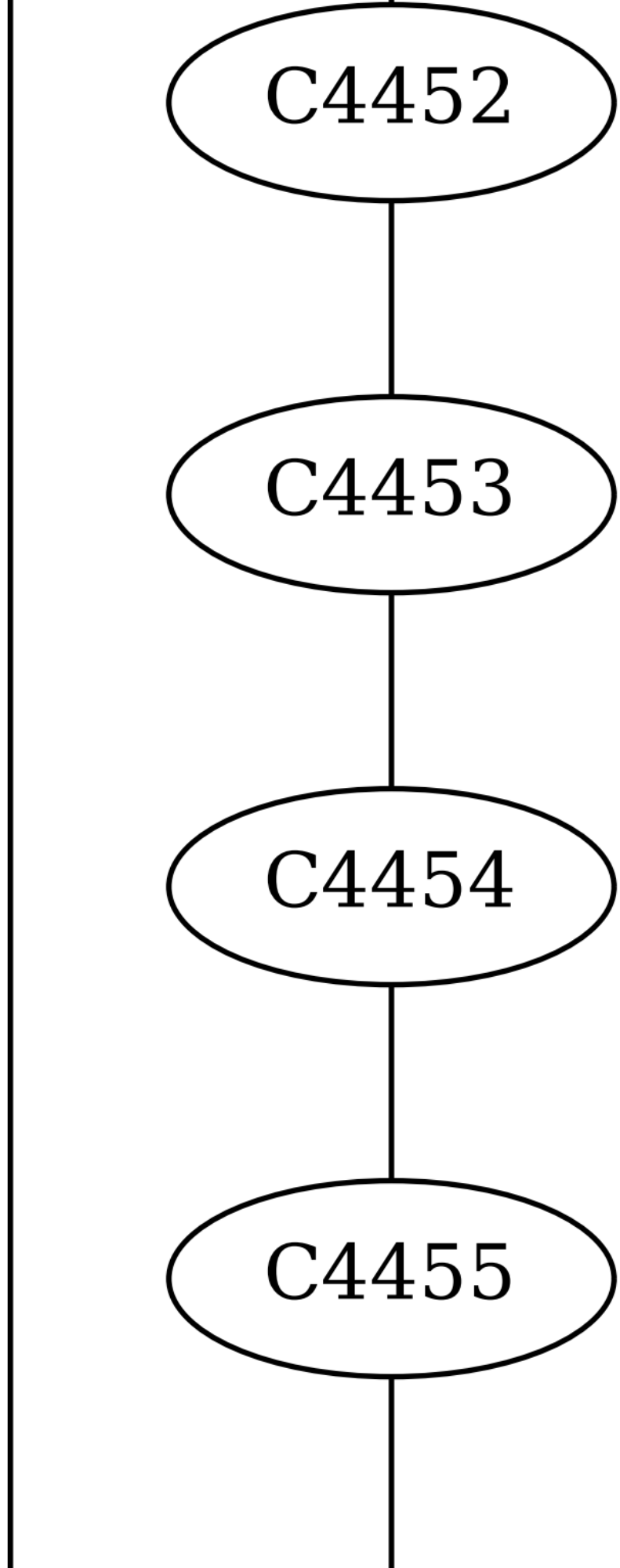
C4452
C4453
C4454
C4455

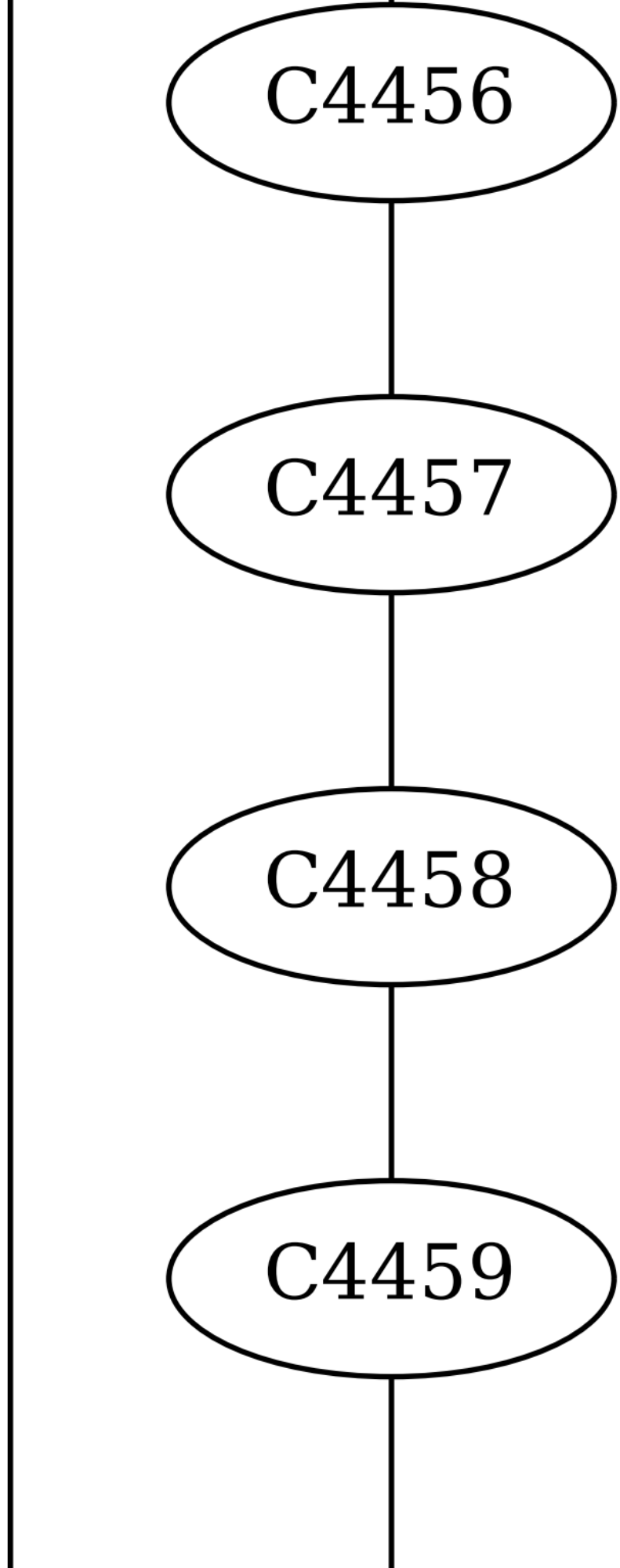
C4456
C4457
C4458
C4459

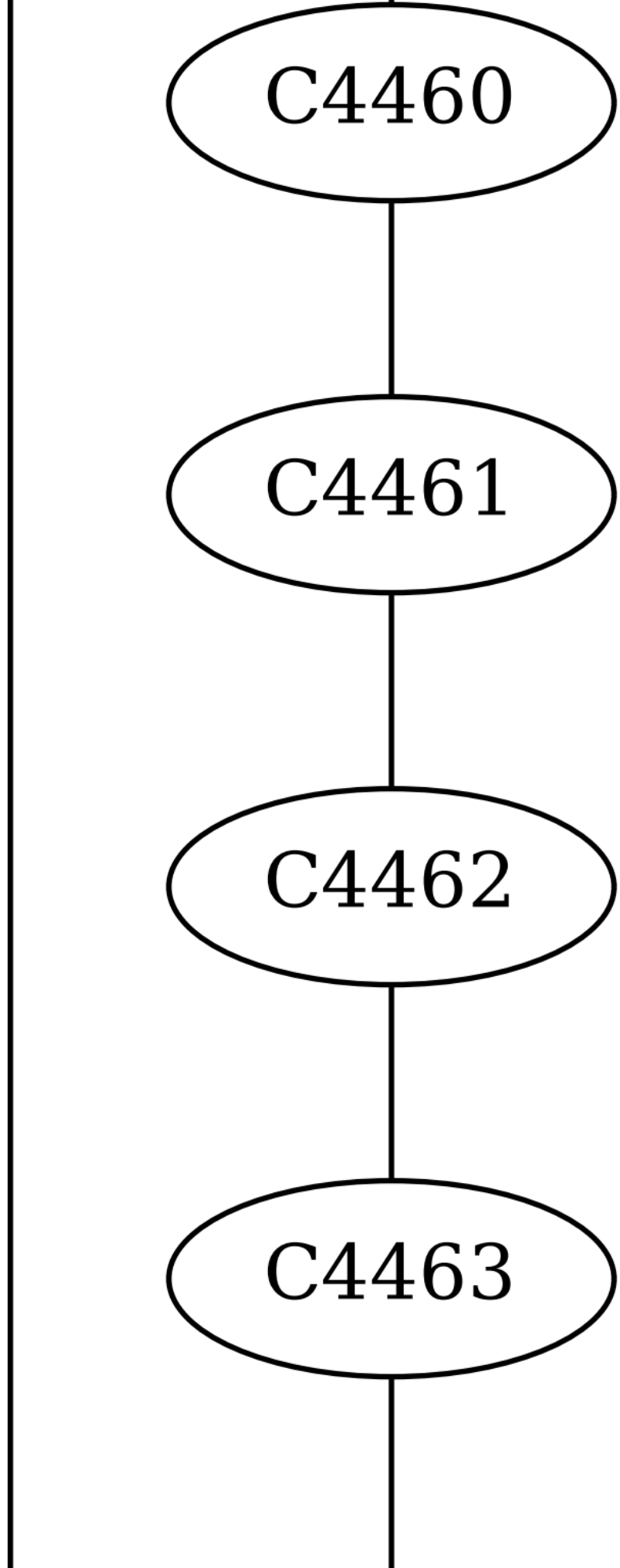
C4460
C4461
C4462
C4463

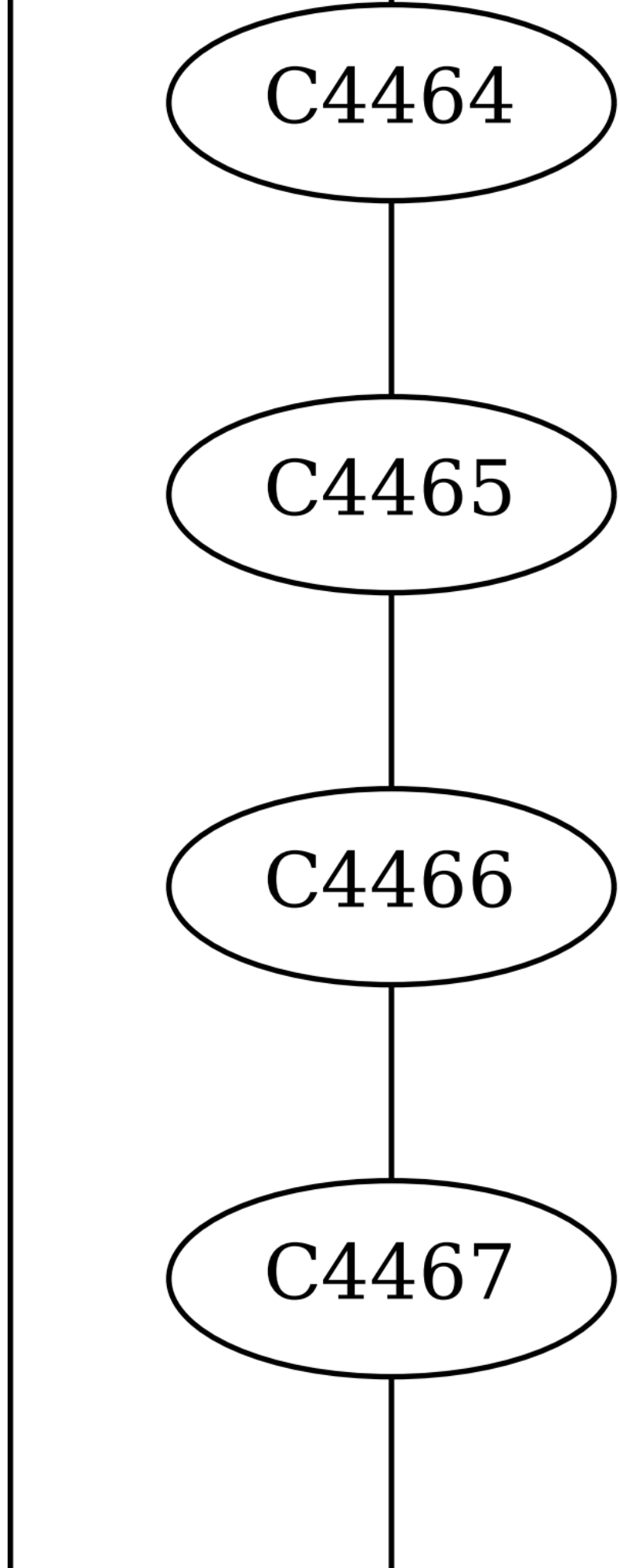
C4464
C4465
C4466
C4467

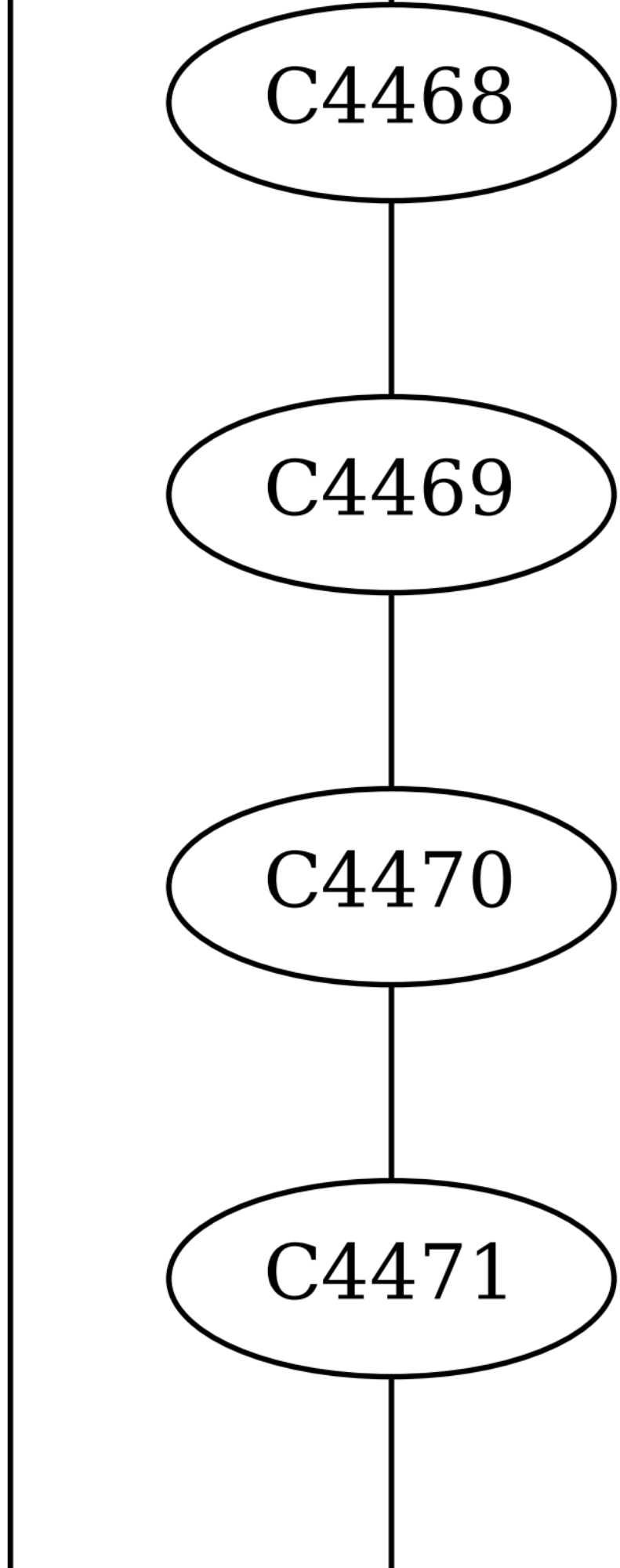
C4468
C4469
C4470
C4471

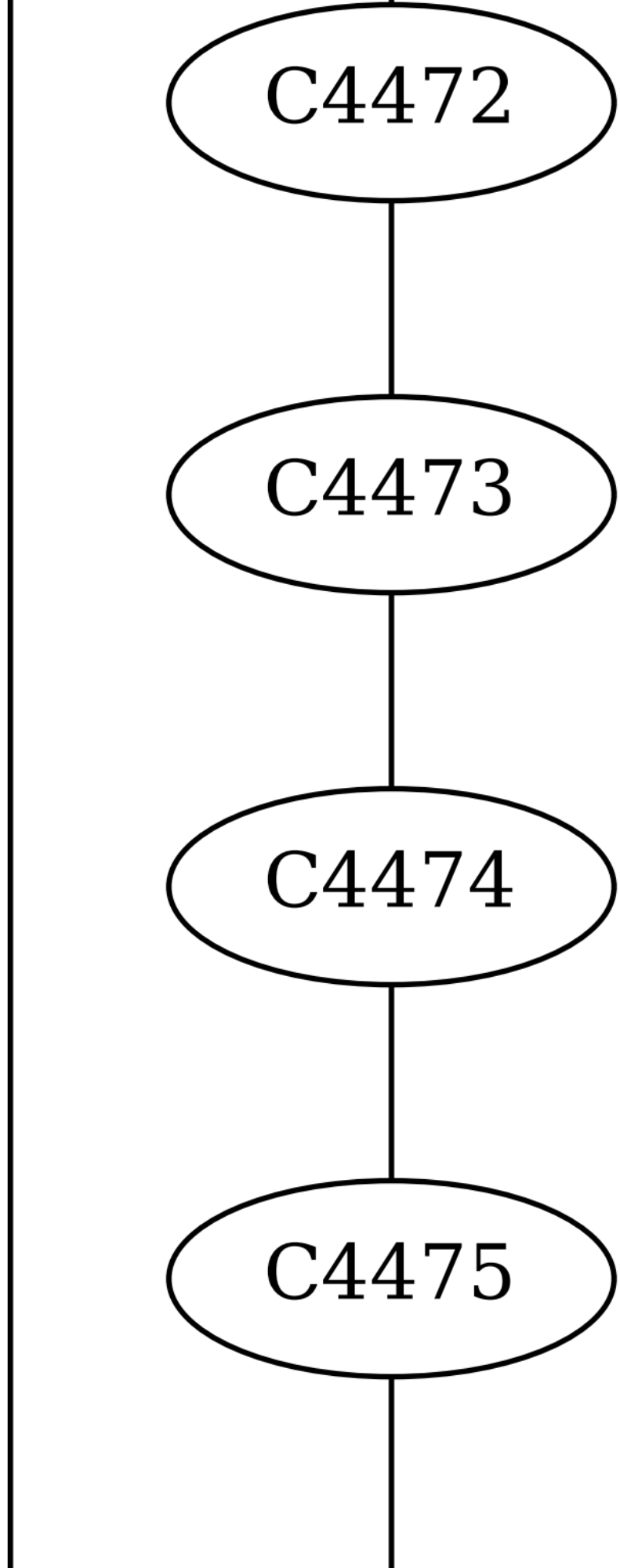
C4472
C4473
C4474
C4475

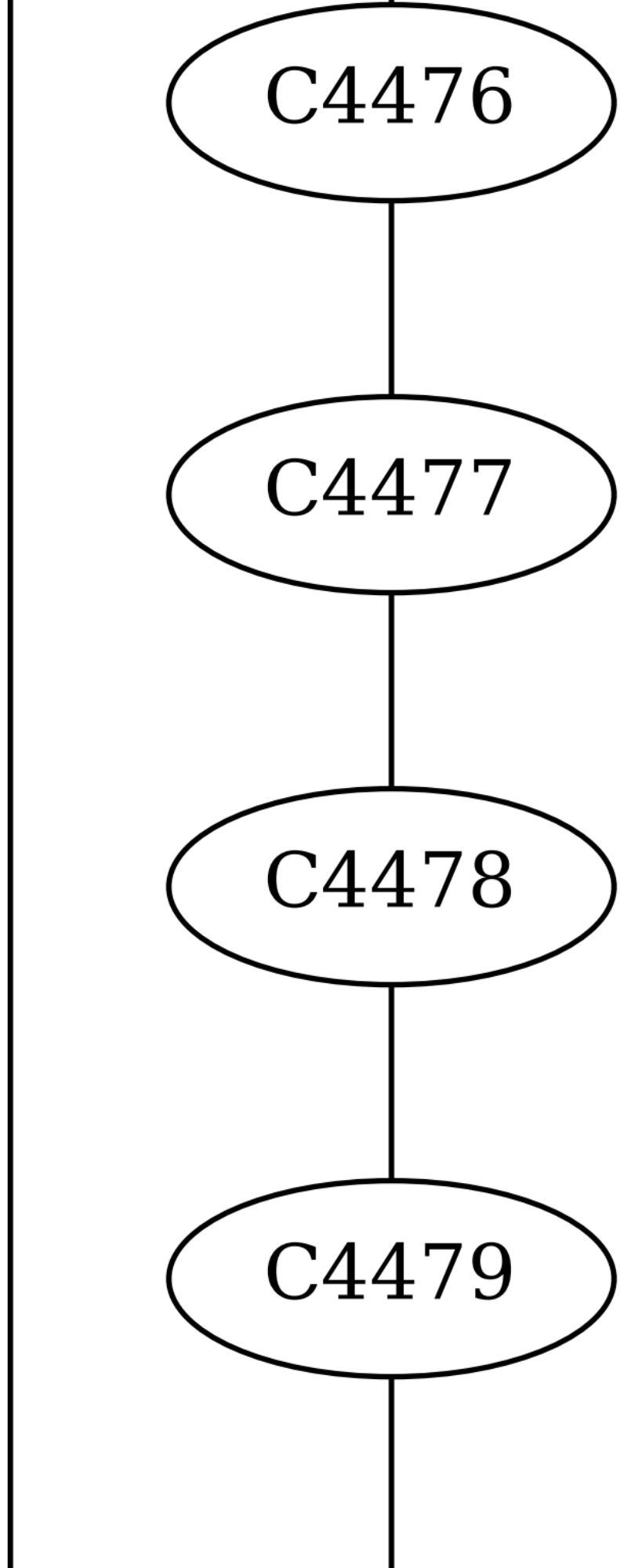
C4476
C4477
C4478
C4479

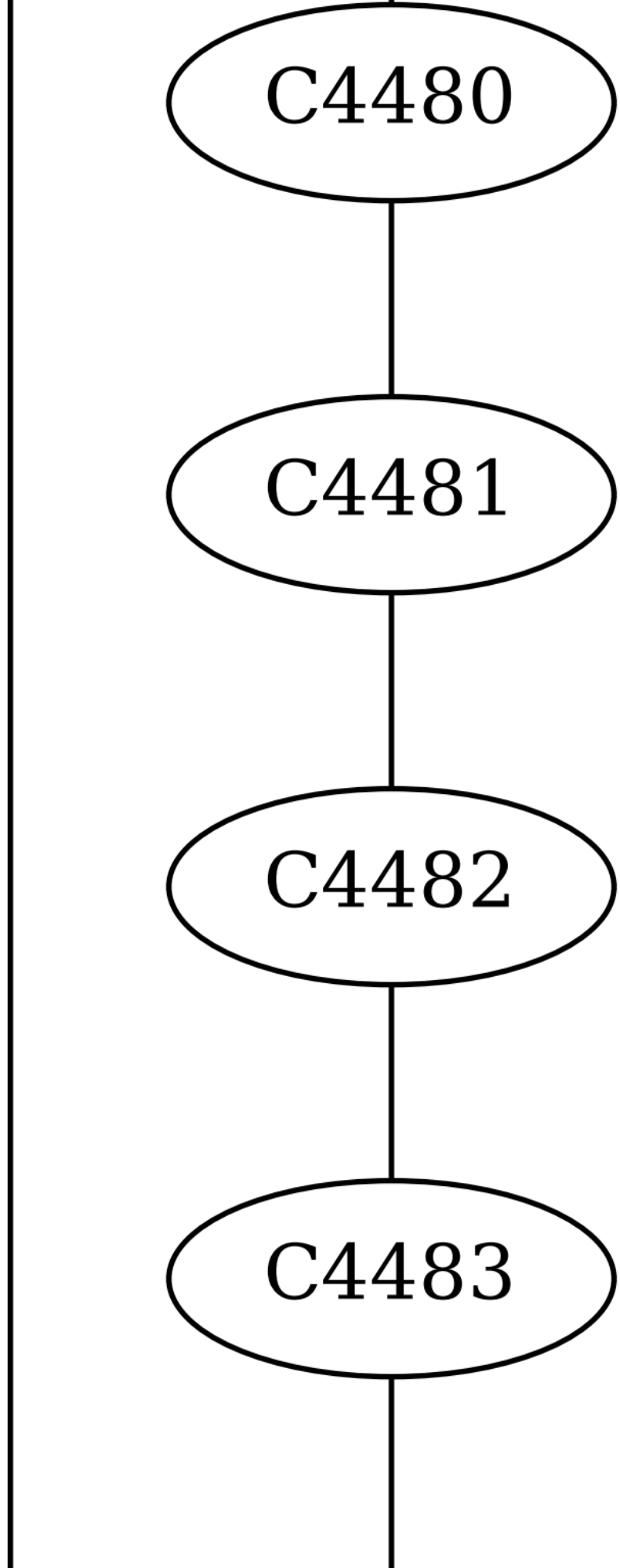
C4480
C4481
C4482
C4483

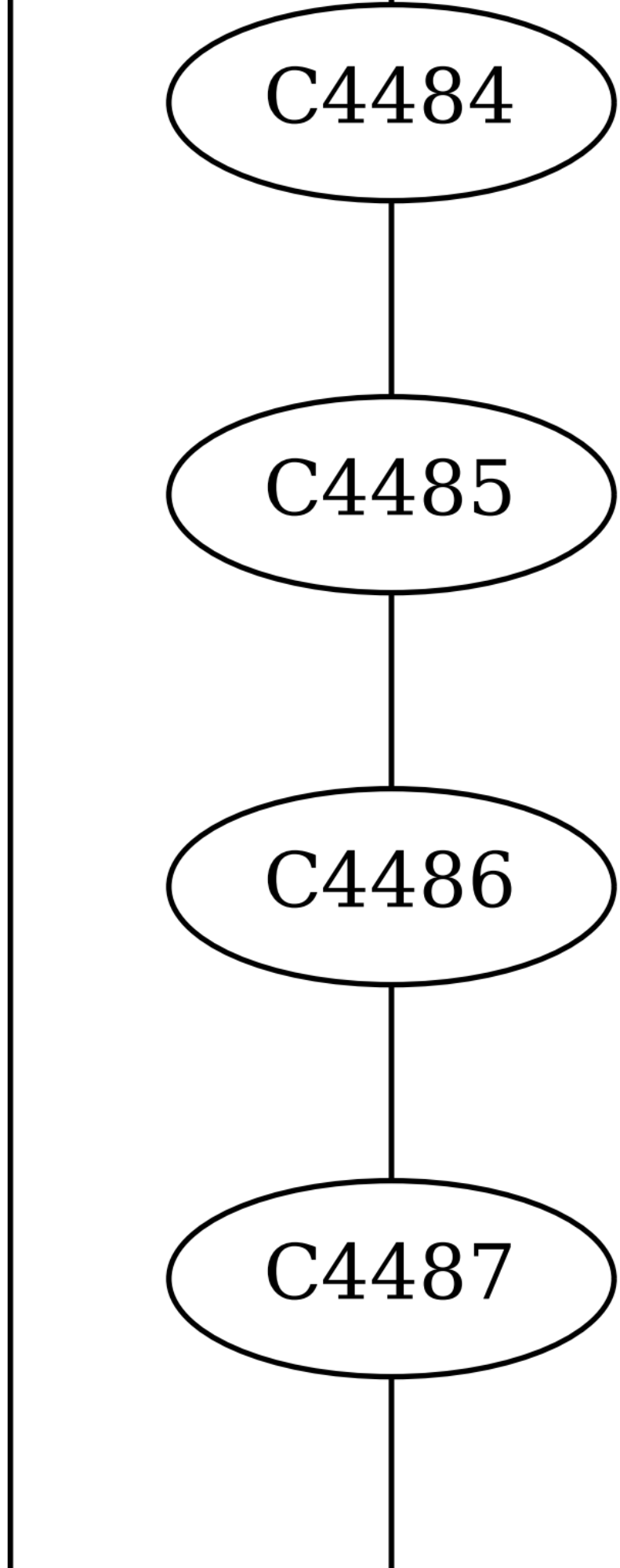
C4484
C4485
C4486
C4487

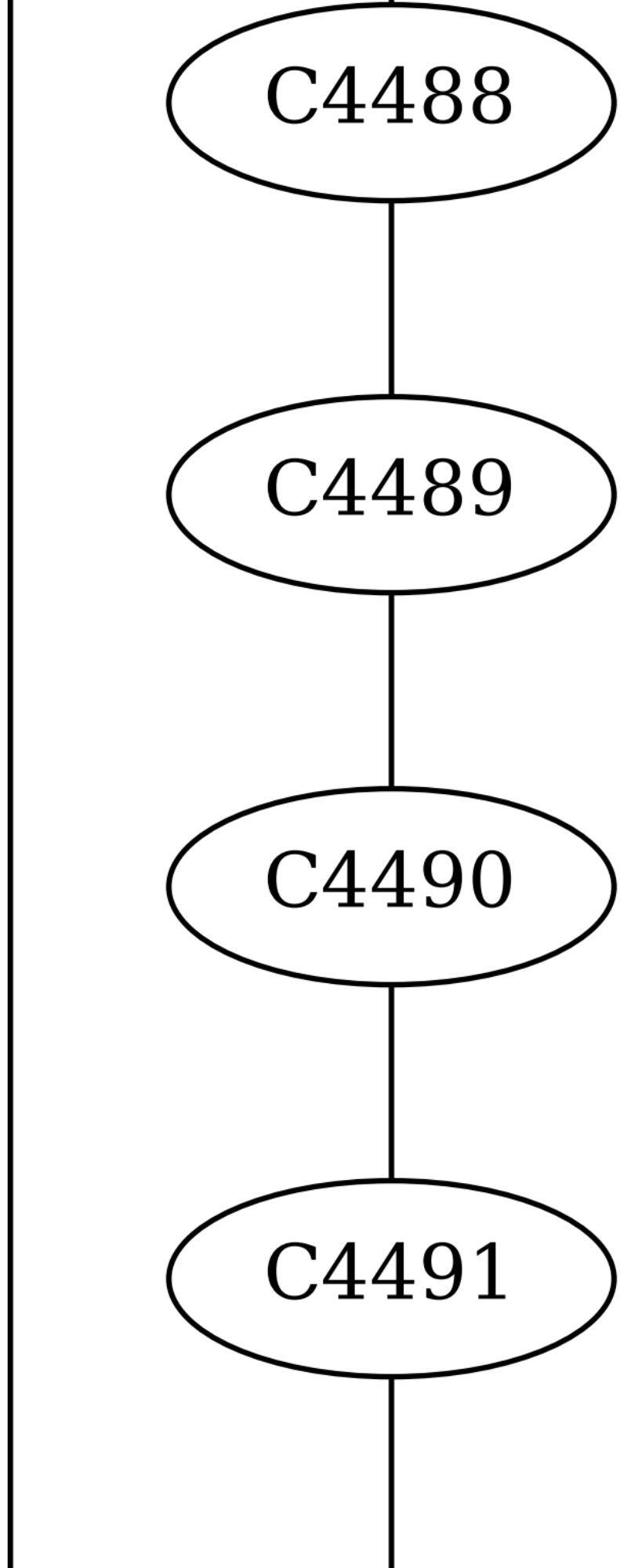
C4488
C4489
C4490
C4491

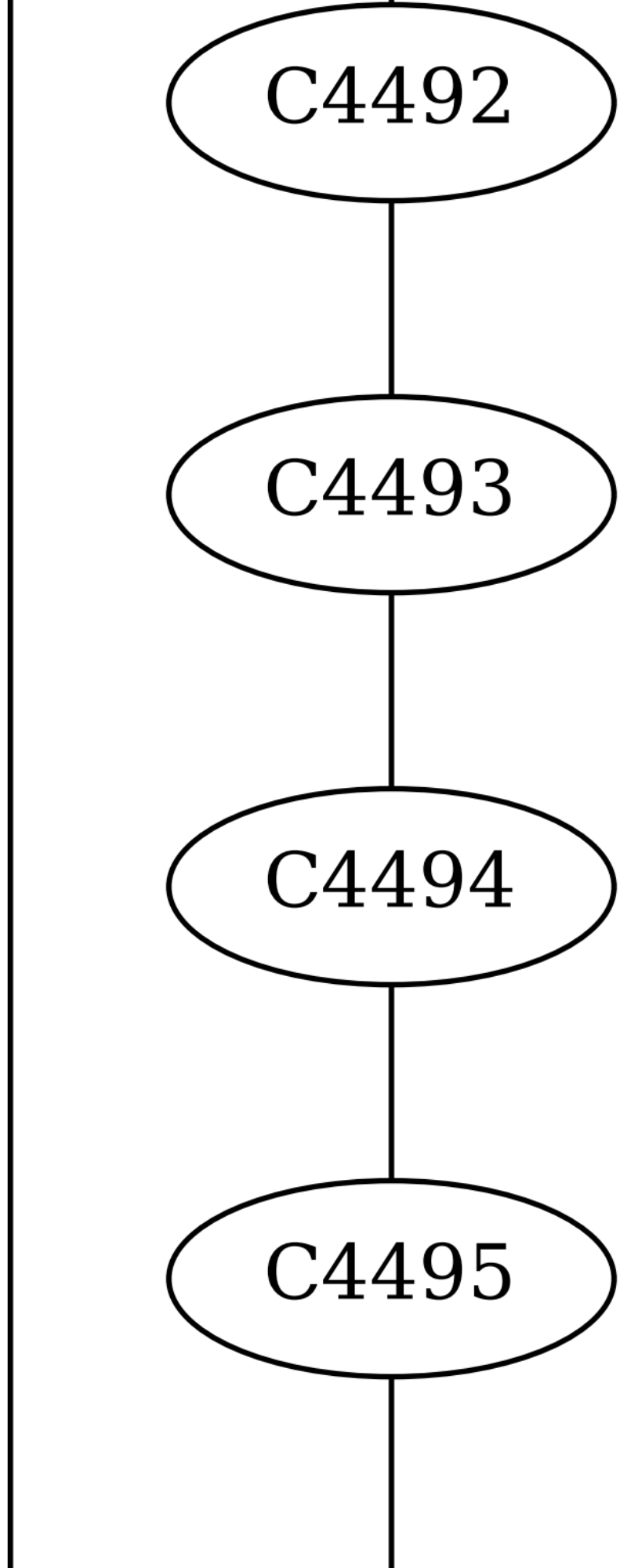
C4492
C4493
C4494
C4495

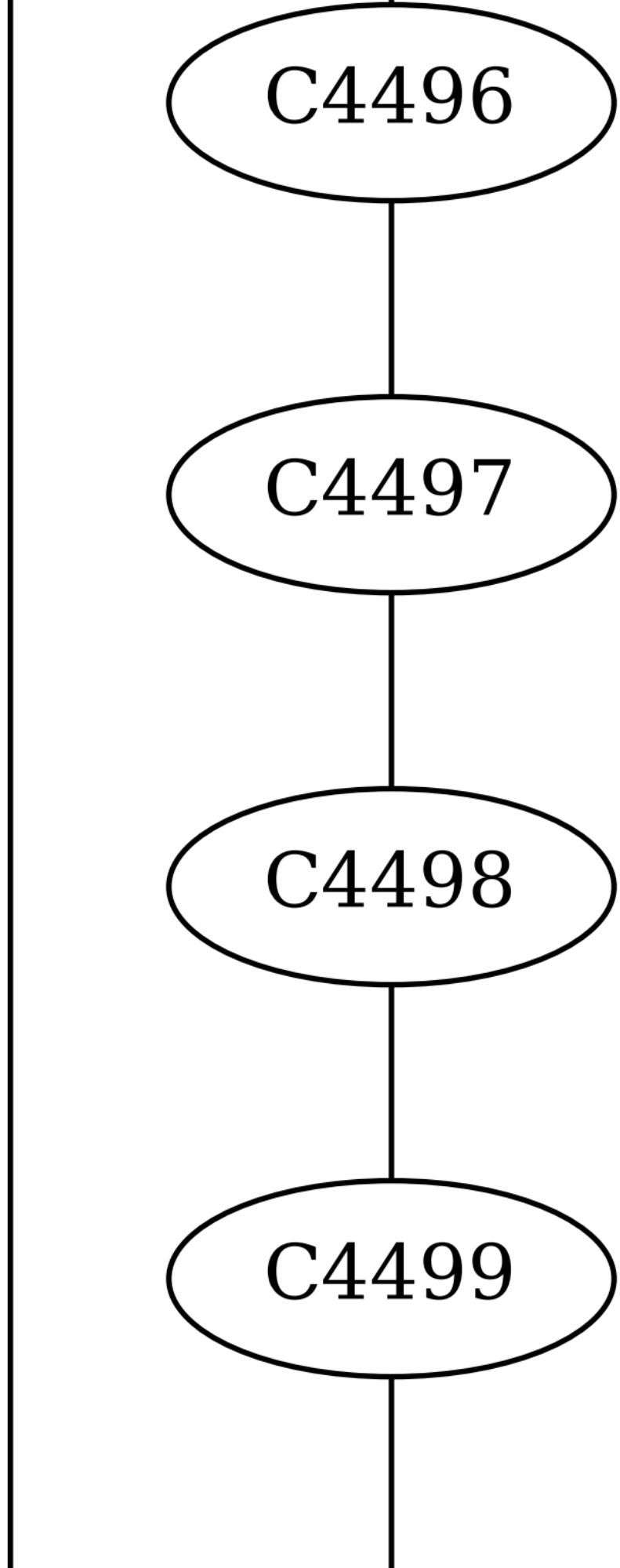
C4496
C4497
C4498
C4499

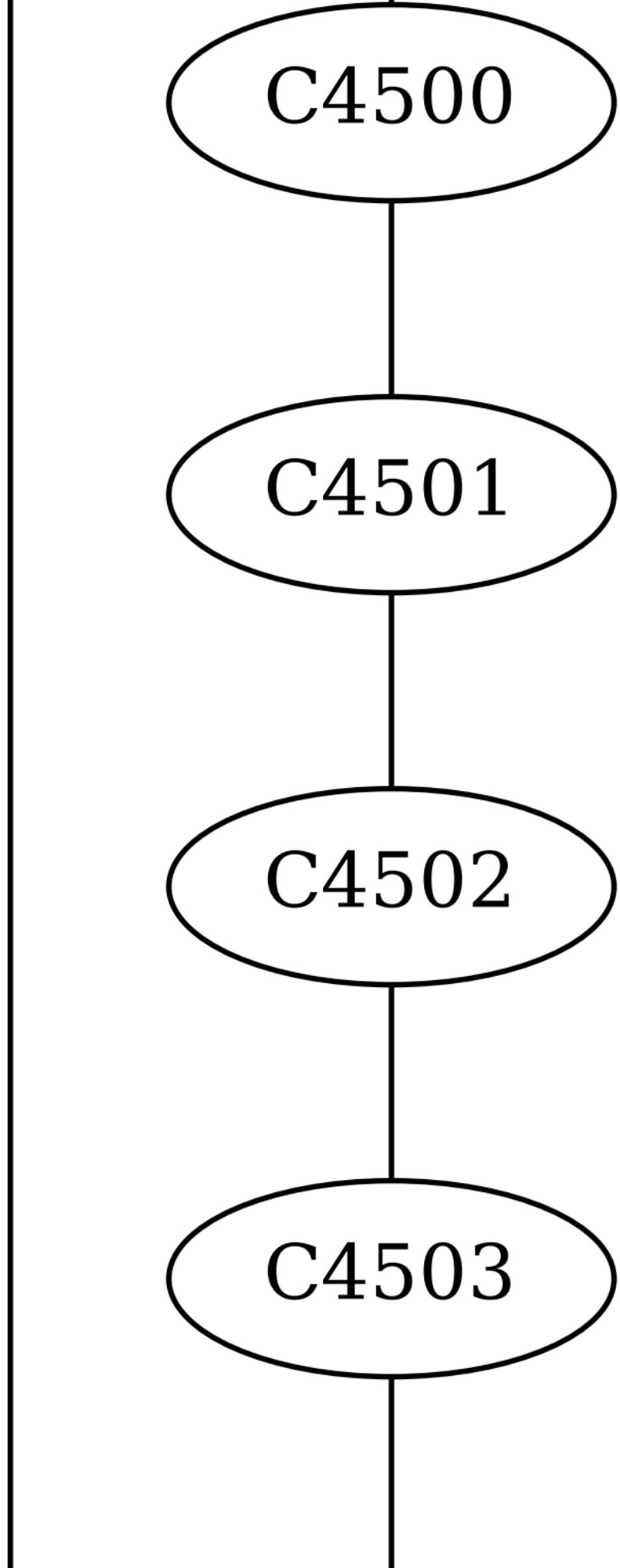
C4500
C4501
C4502
C4503

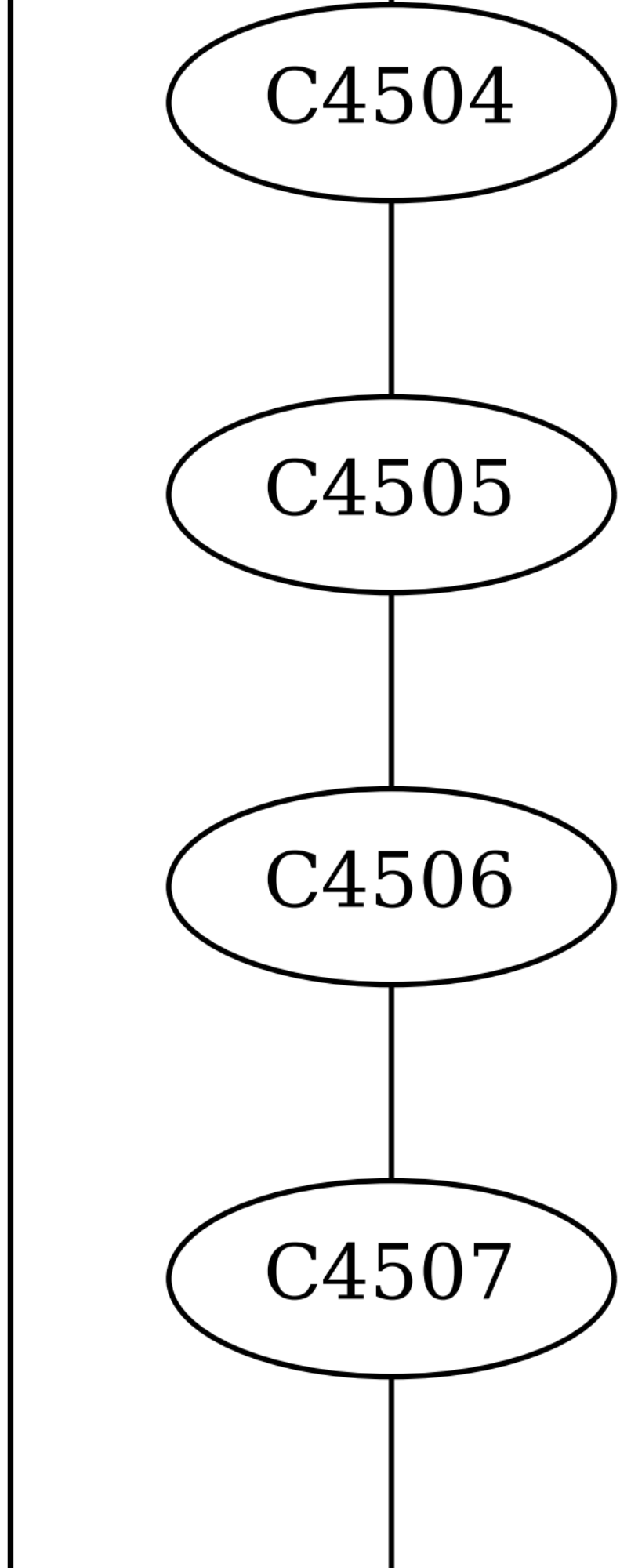
C4504
C4505
C4506
C4507

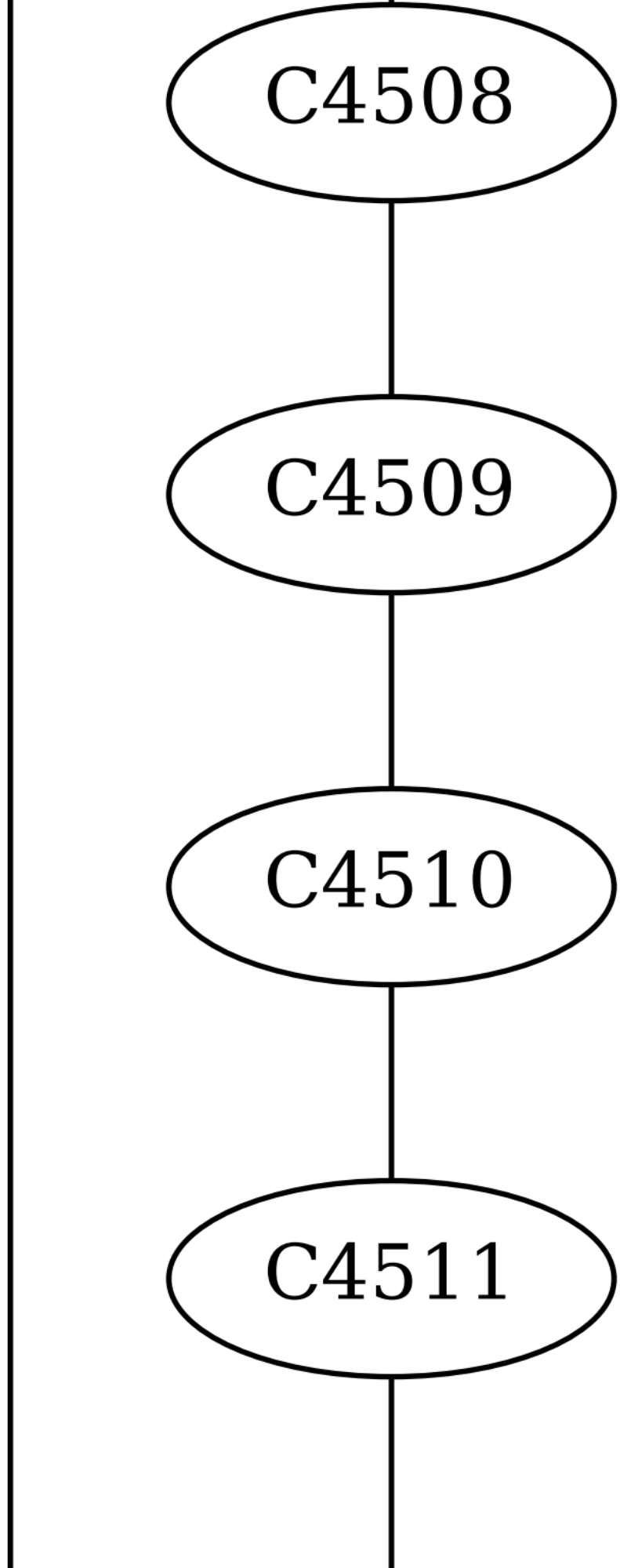
C4508
C4509
C4510
C4511

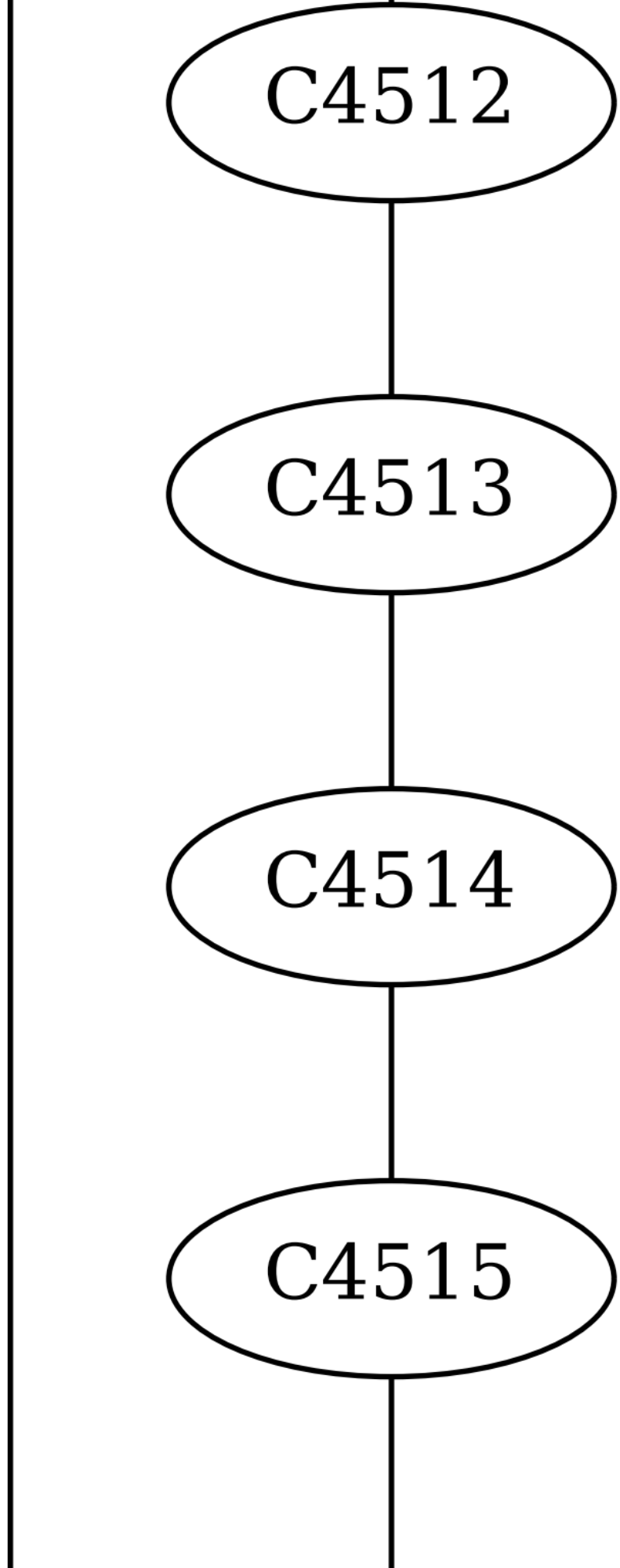
C4512
C4513
C4514
C4515

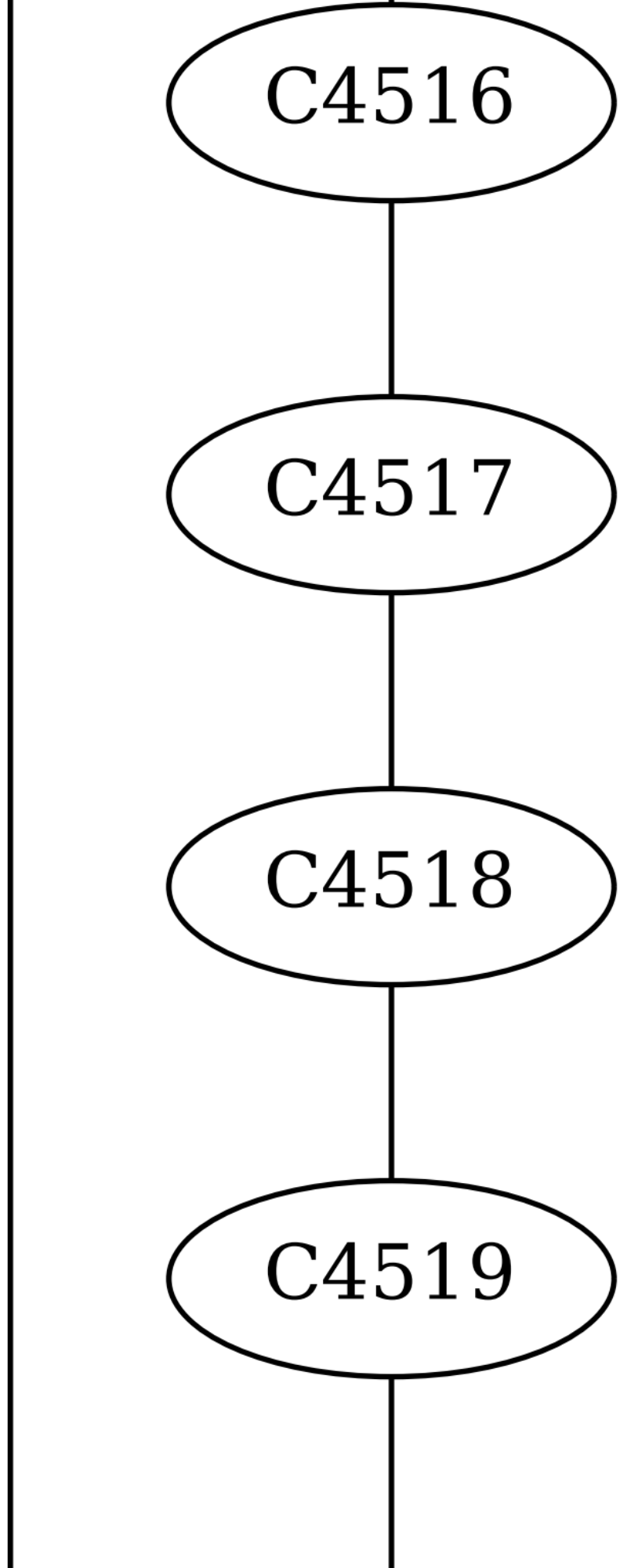
C4516
C4517
C4518
C4519

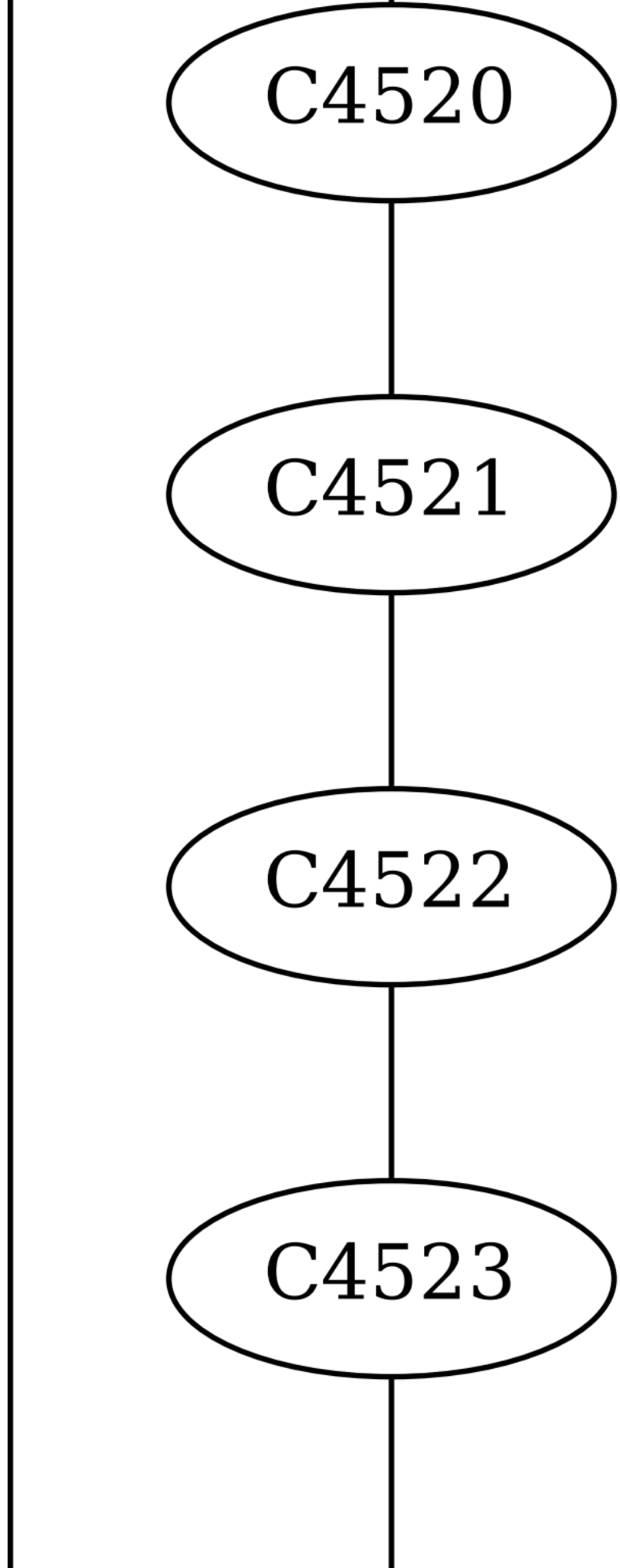
C4520
C4521
C4522
C4523

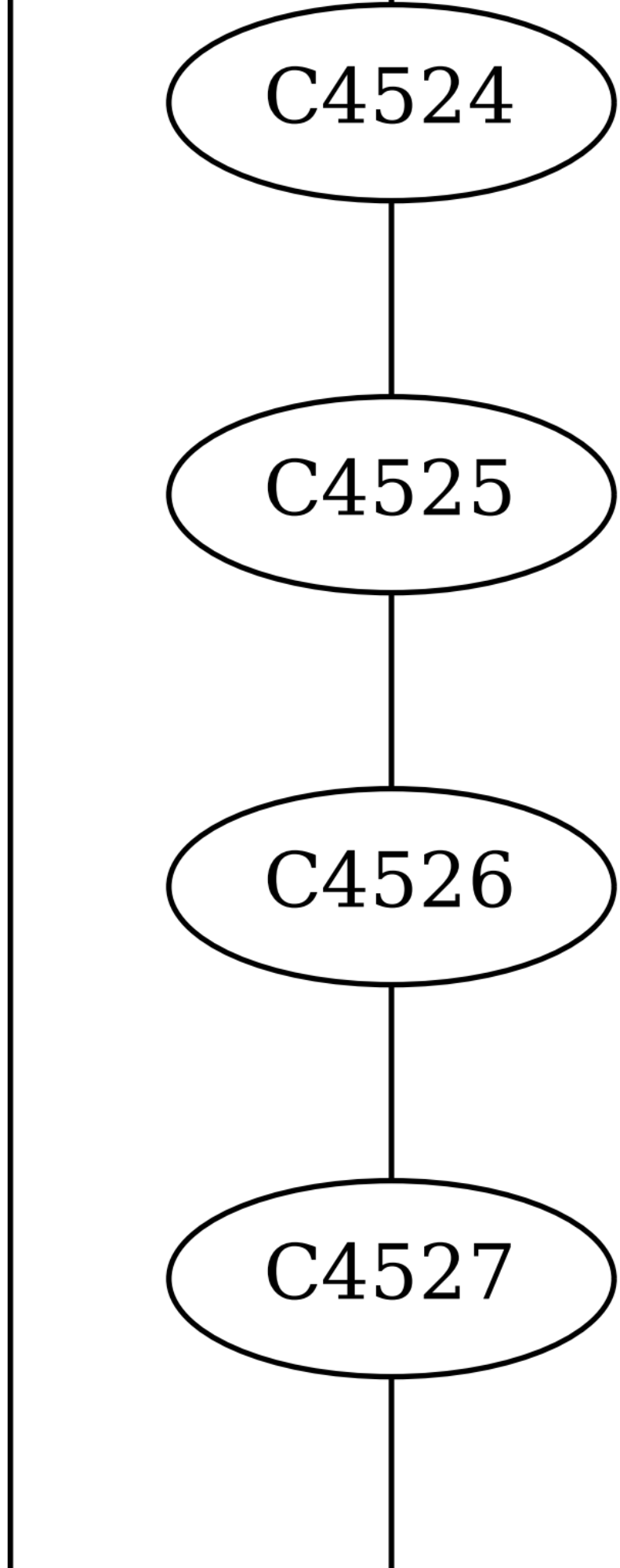
C4524
C4525
C4526
C4527

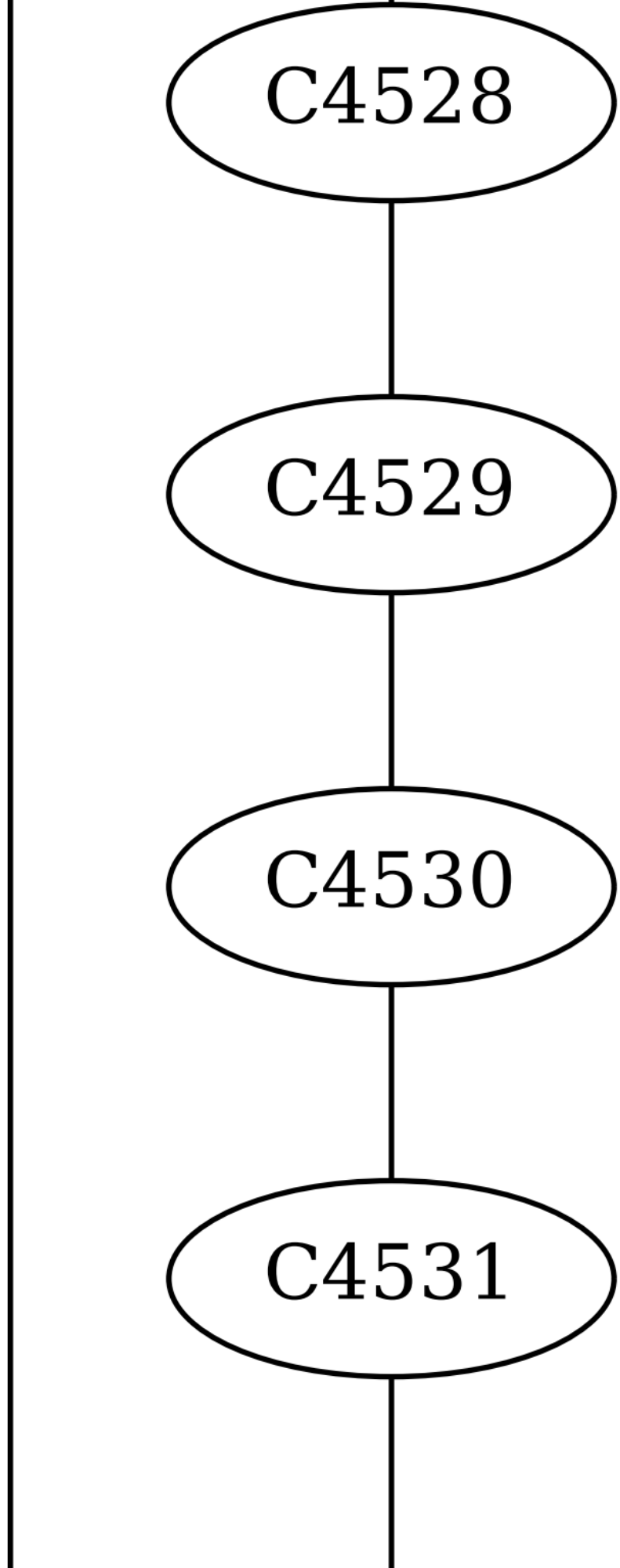
C4528
C4529
C4530
C4531

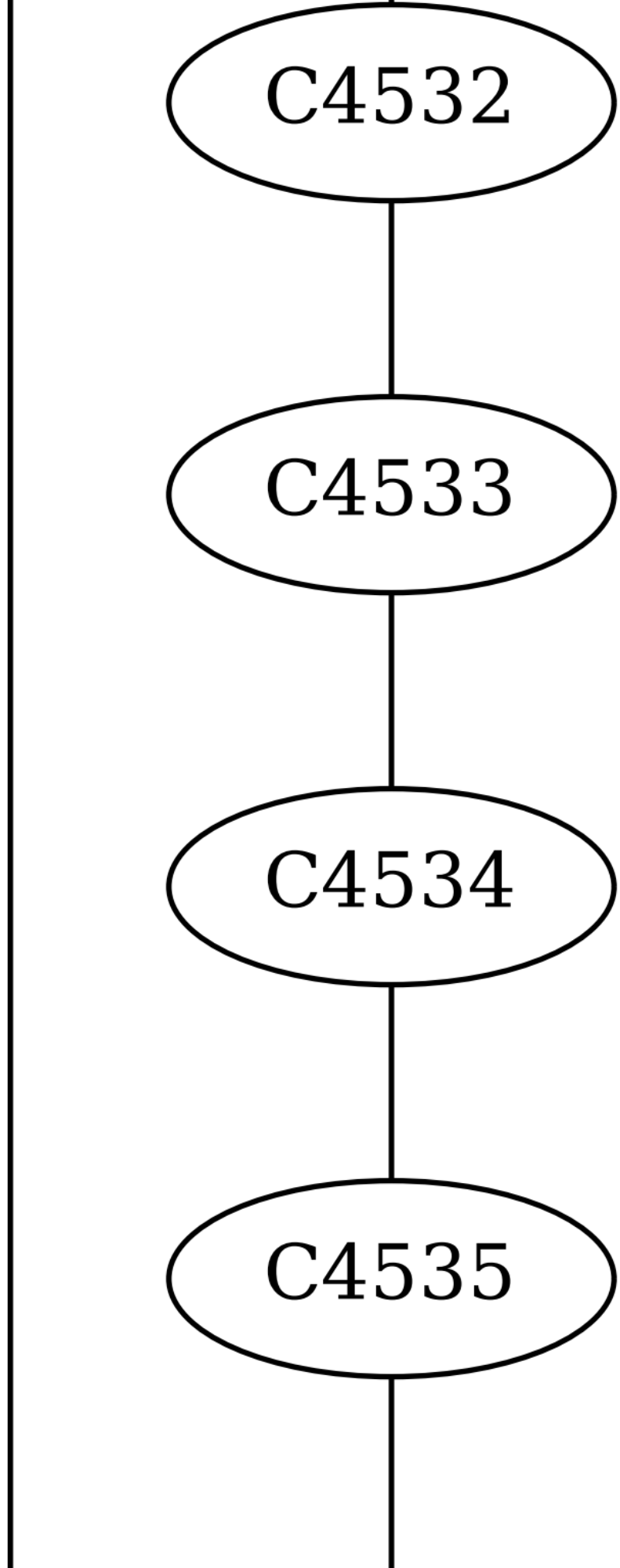
C4532
C4533
C4534
C4535

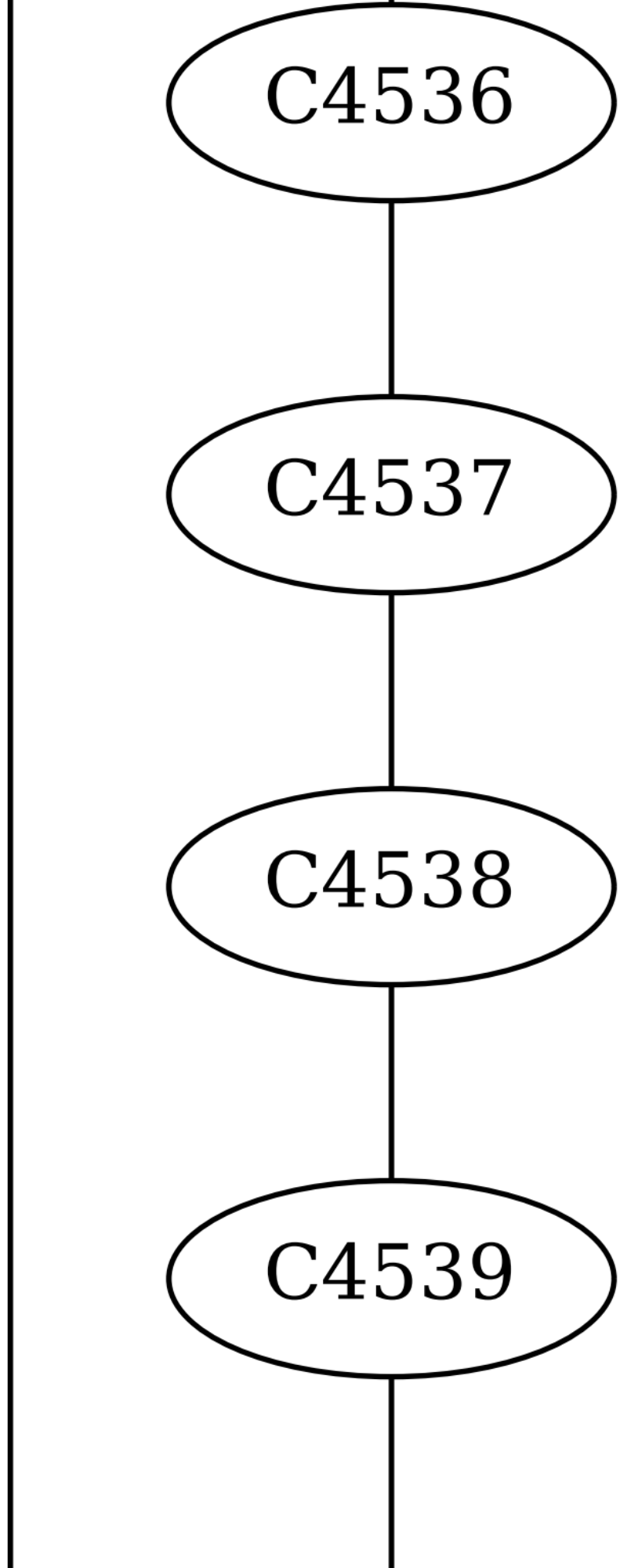
C4536
C4537
C4538
C4539

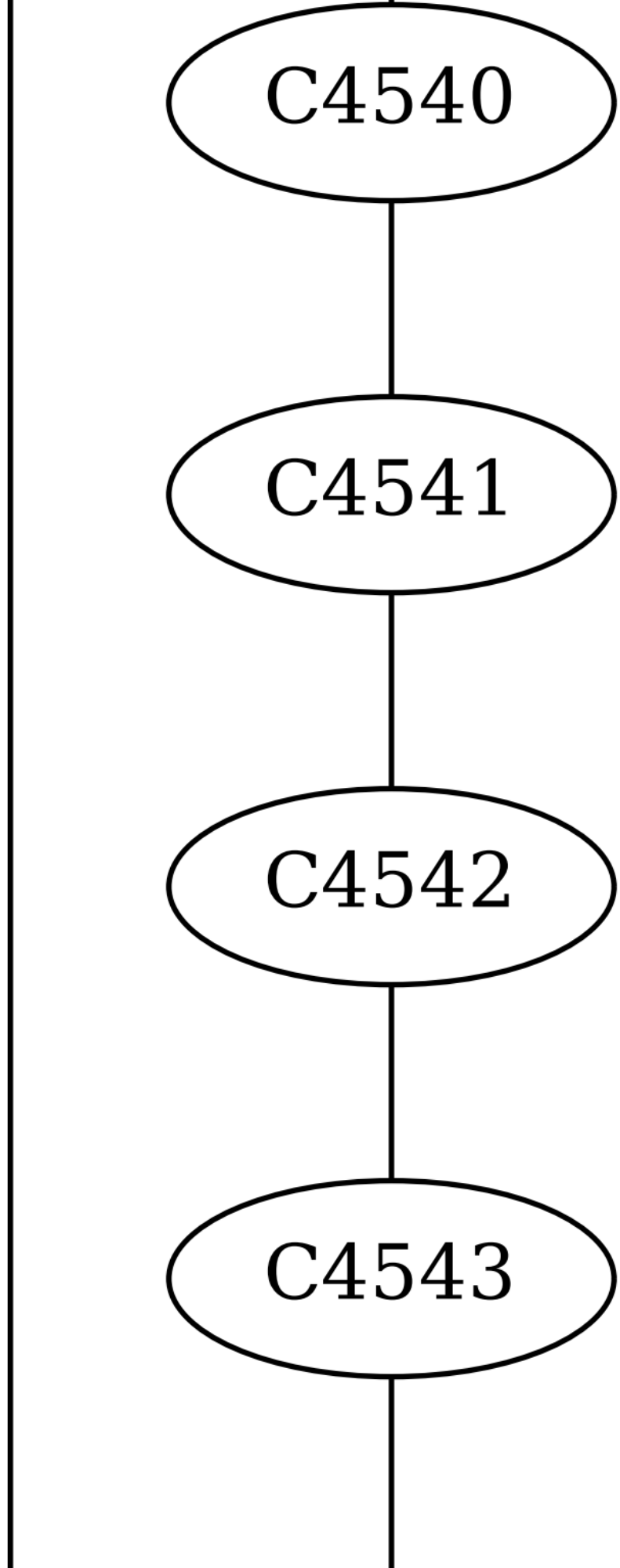
C4540
C4541
C4542
C4543

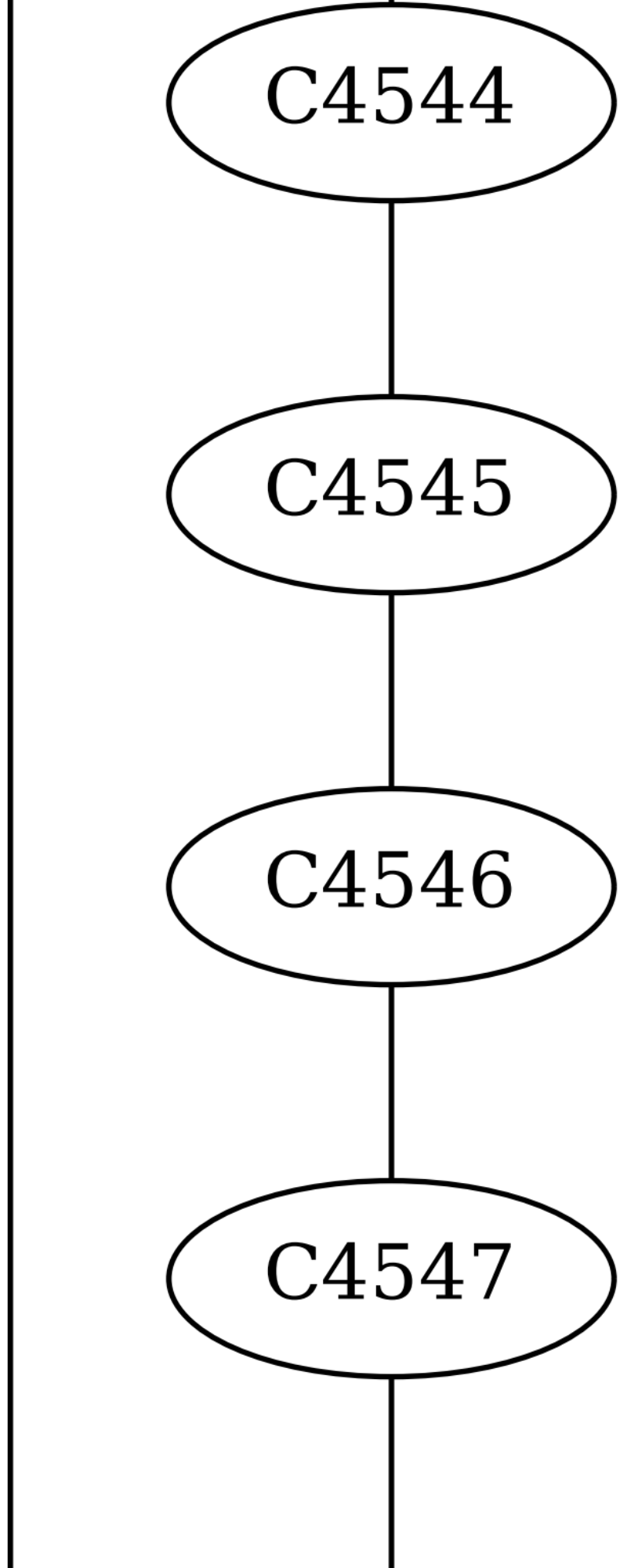
C4544
C4545
C4546
C4547

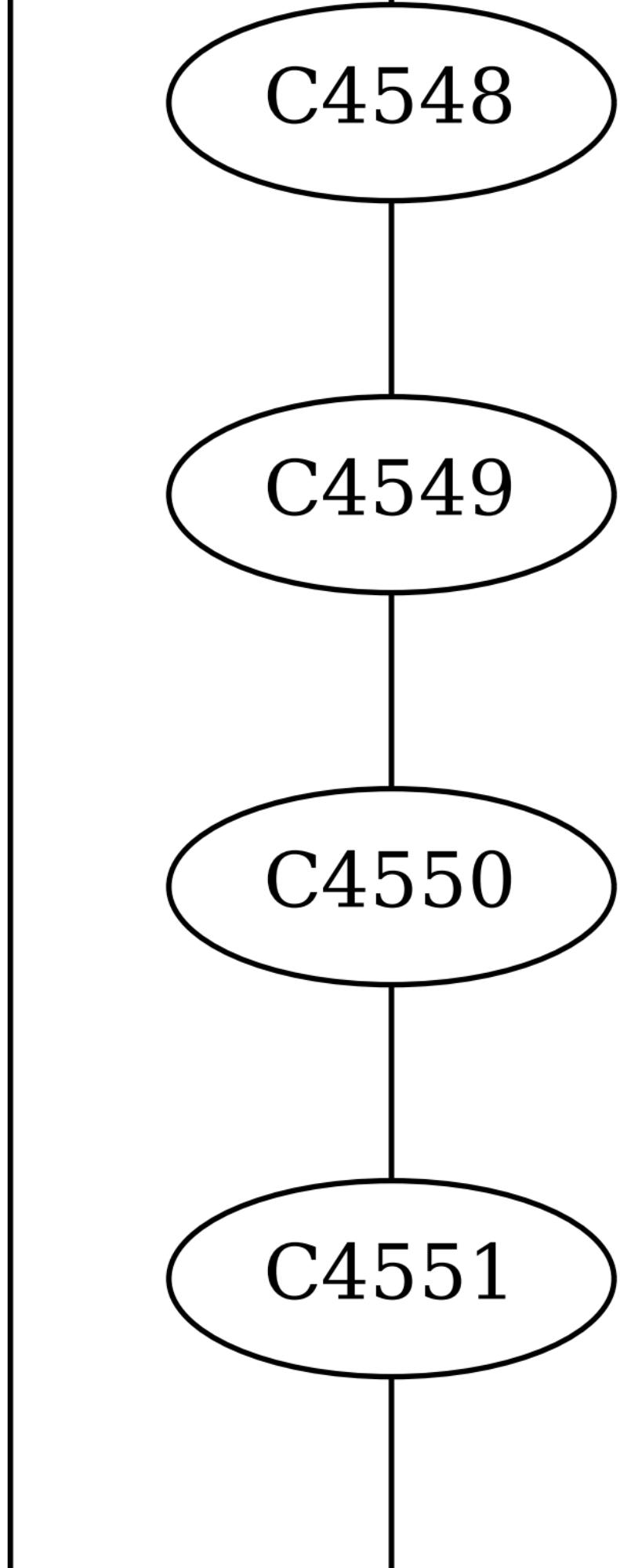
C4548
C4549
C4550
C4551

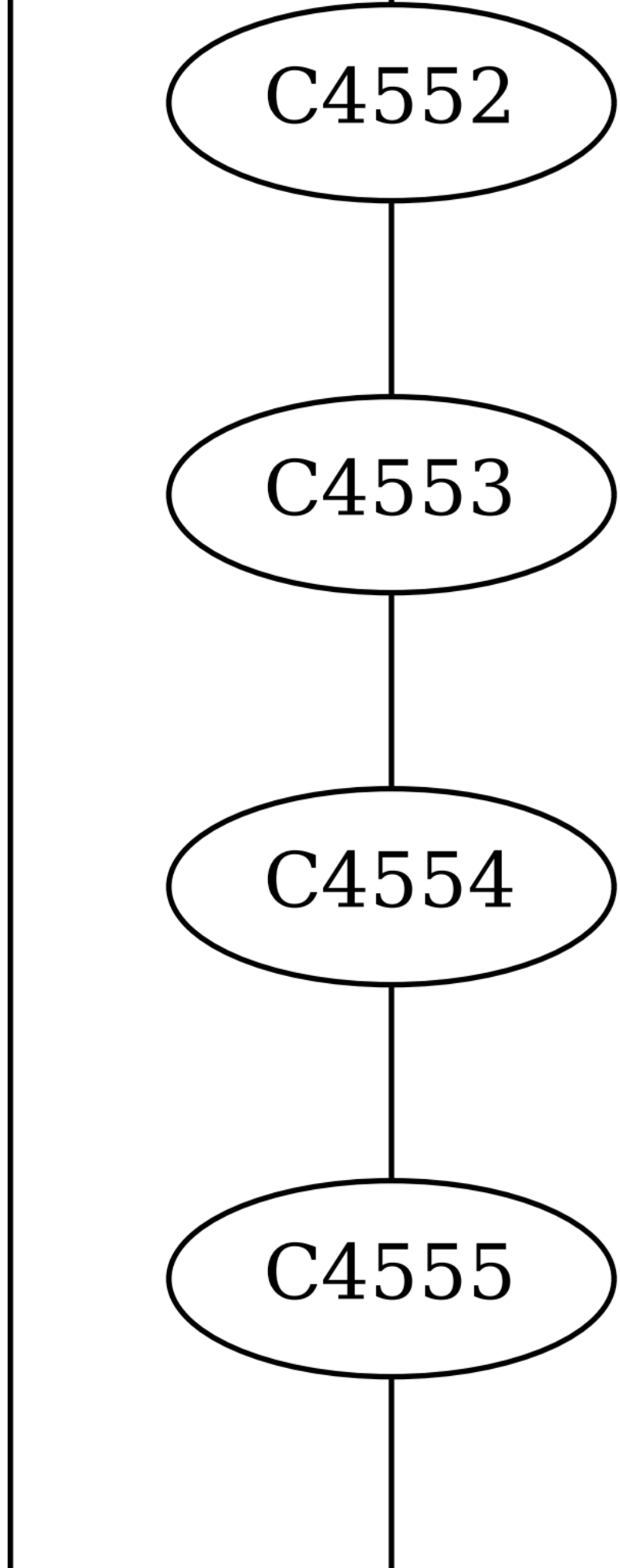
C4552
C4553
C4554
C4555

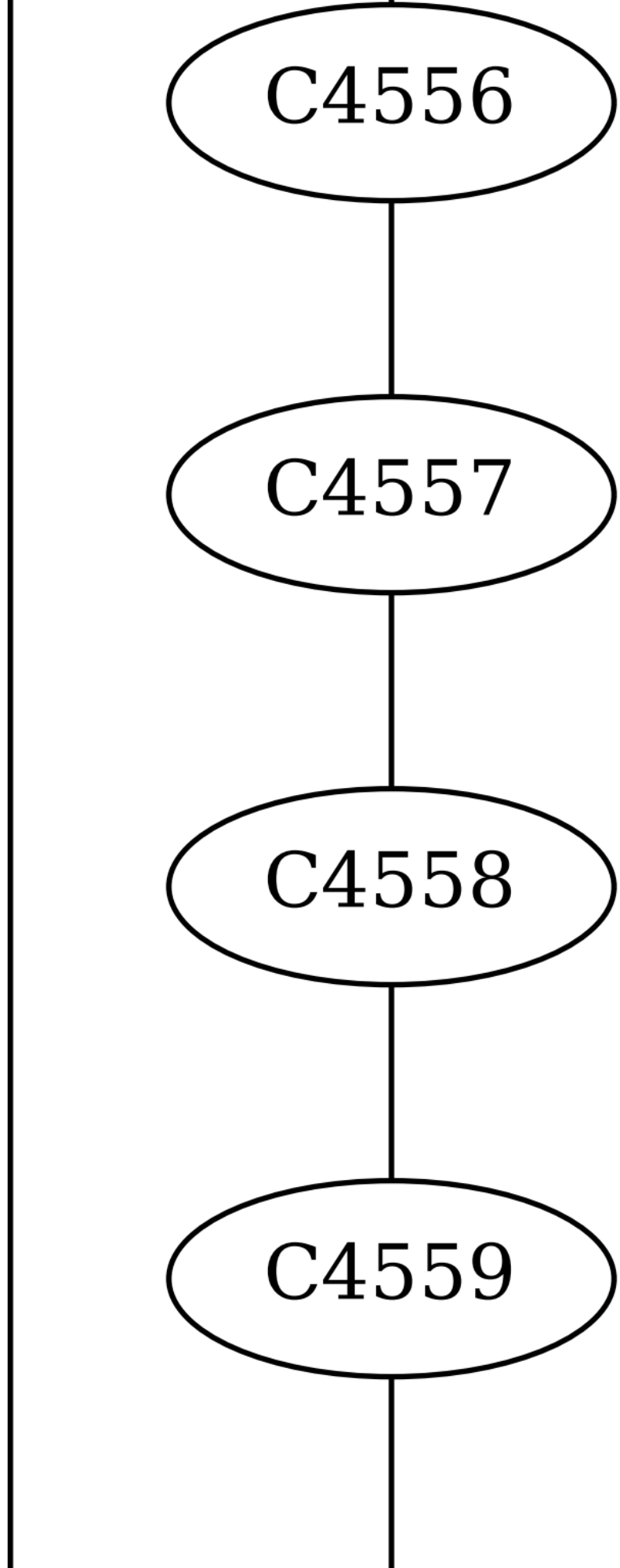
C4556
C4557
C4558
C4559

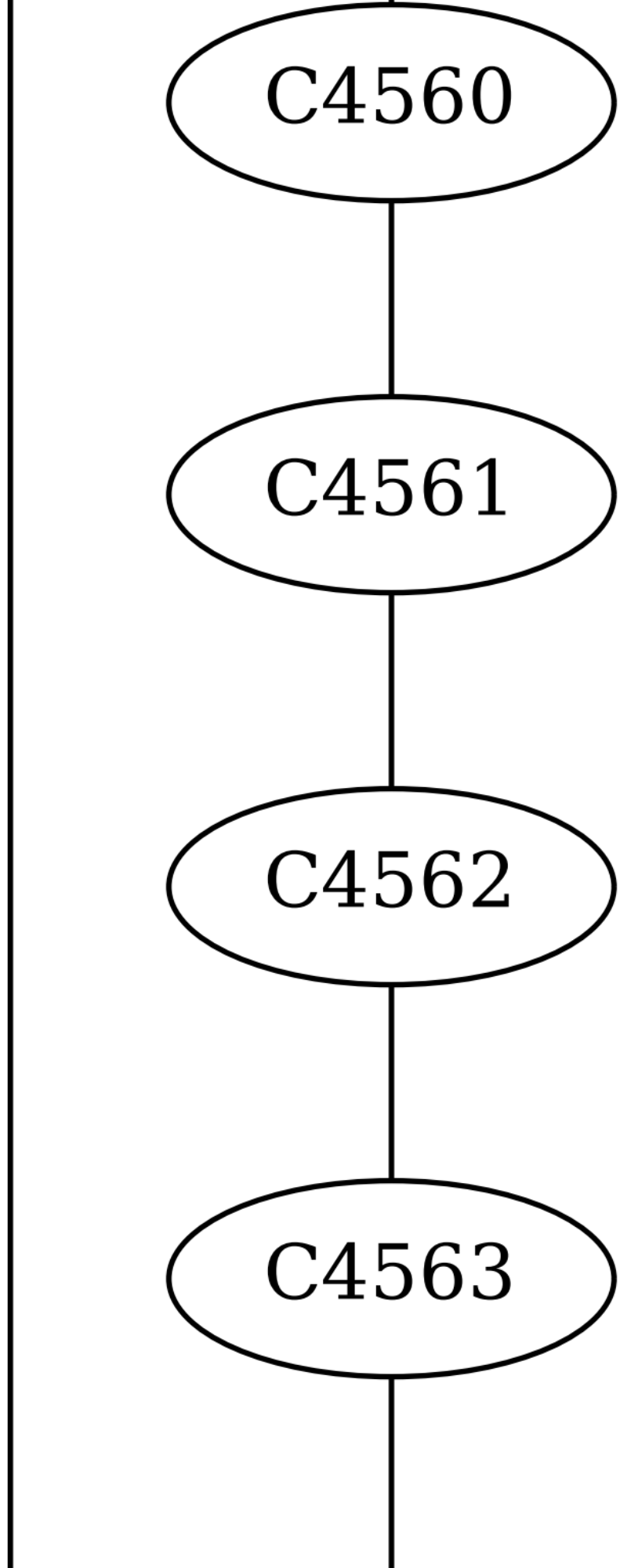
C4560
C4561
C4562
C4563

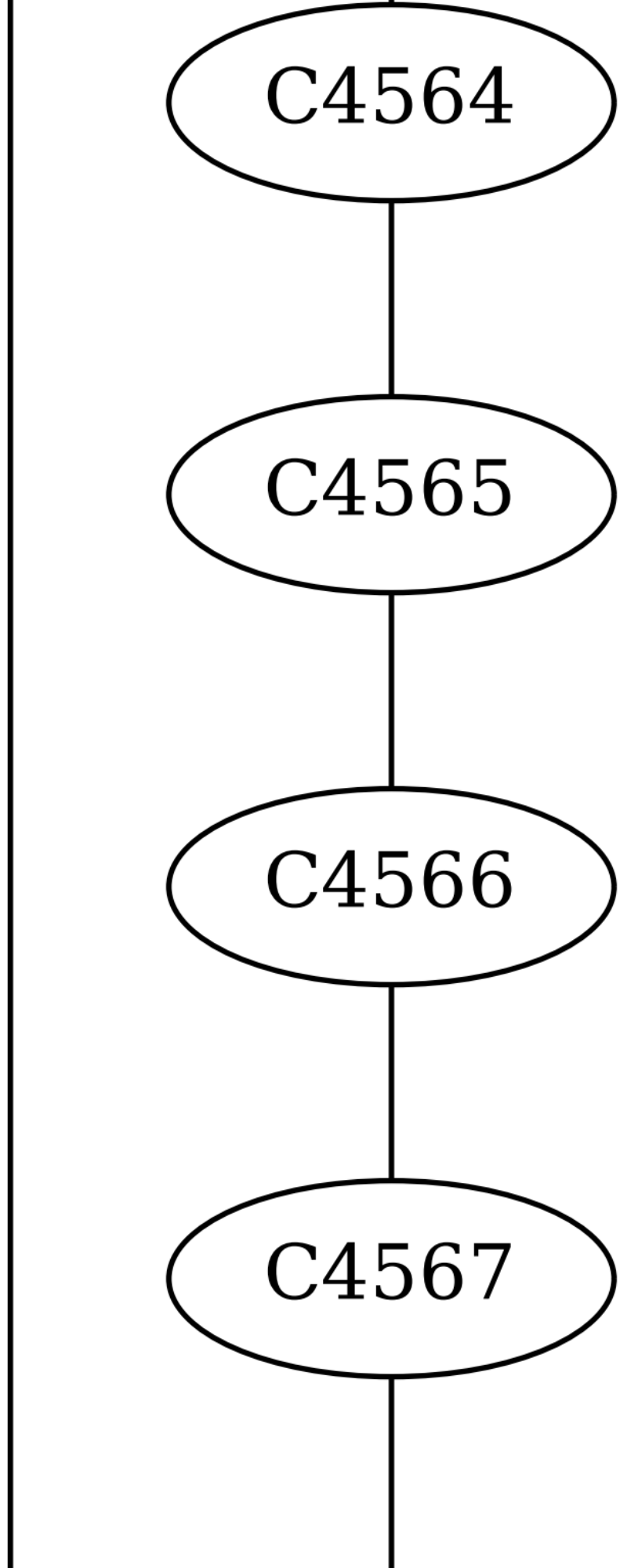
C4564
C4565
C4566
C4567

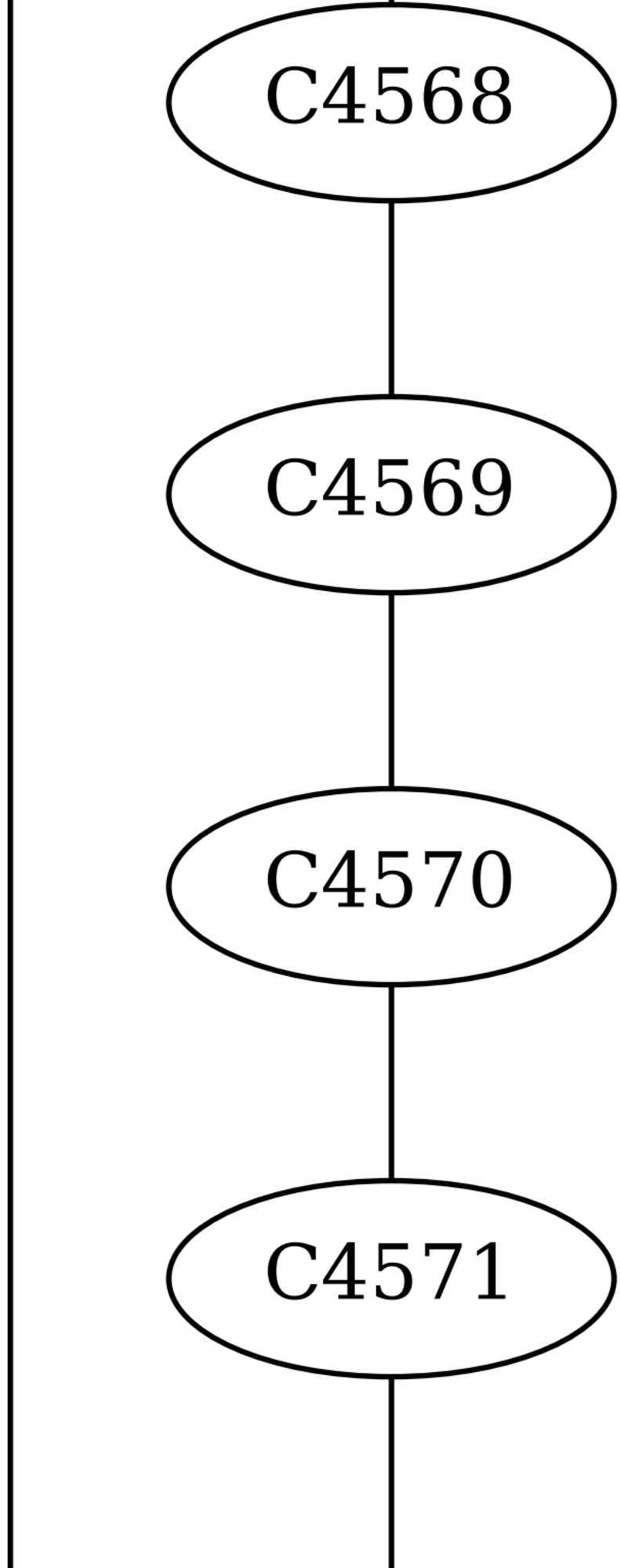
C4568
C4569
C4570
C4571

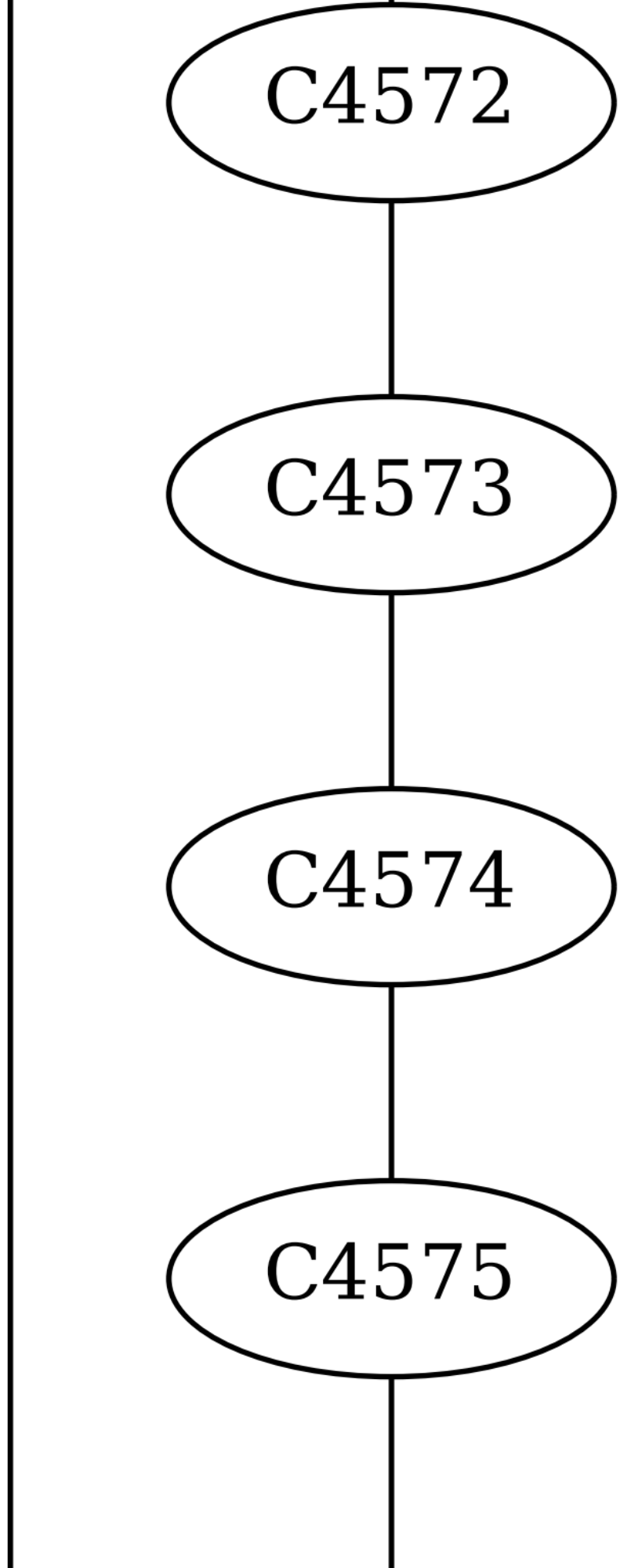
C4572
C4573
C4574
C4575

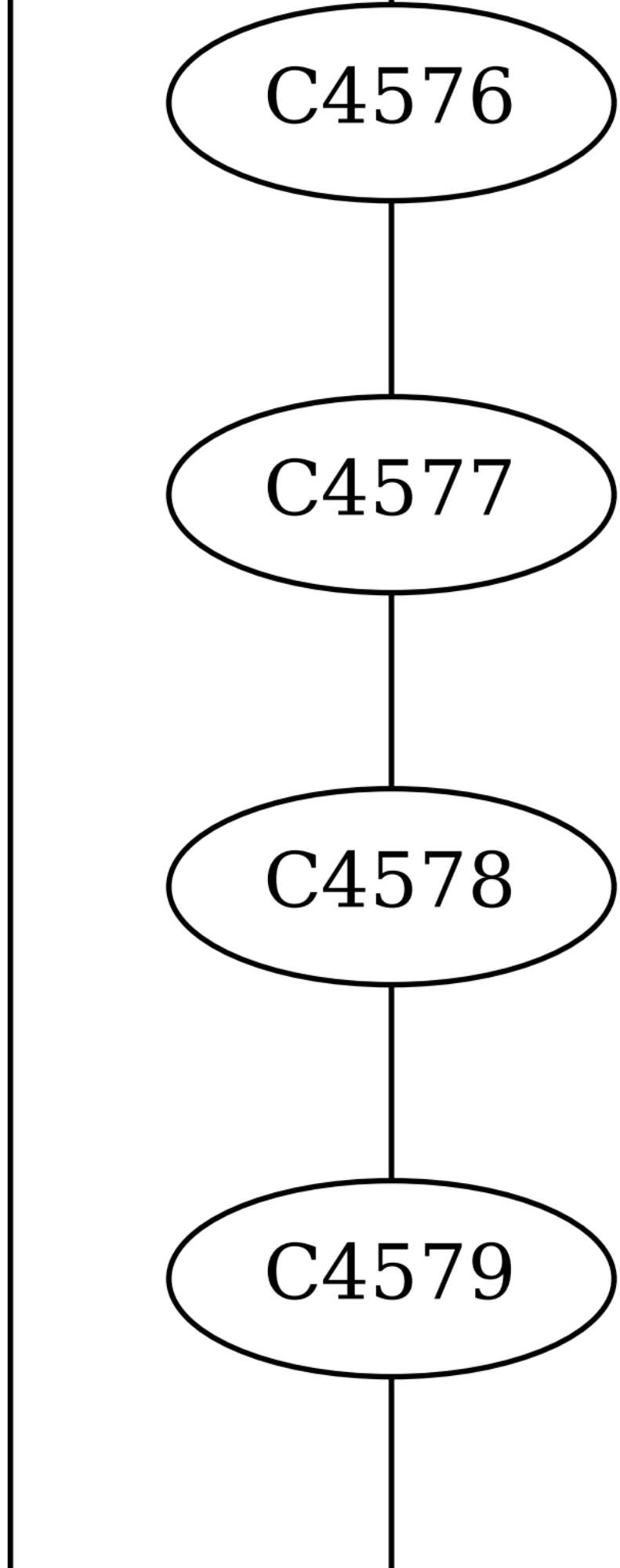
C4576
C4577
C4578
C4579

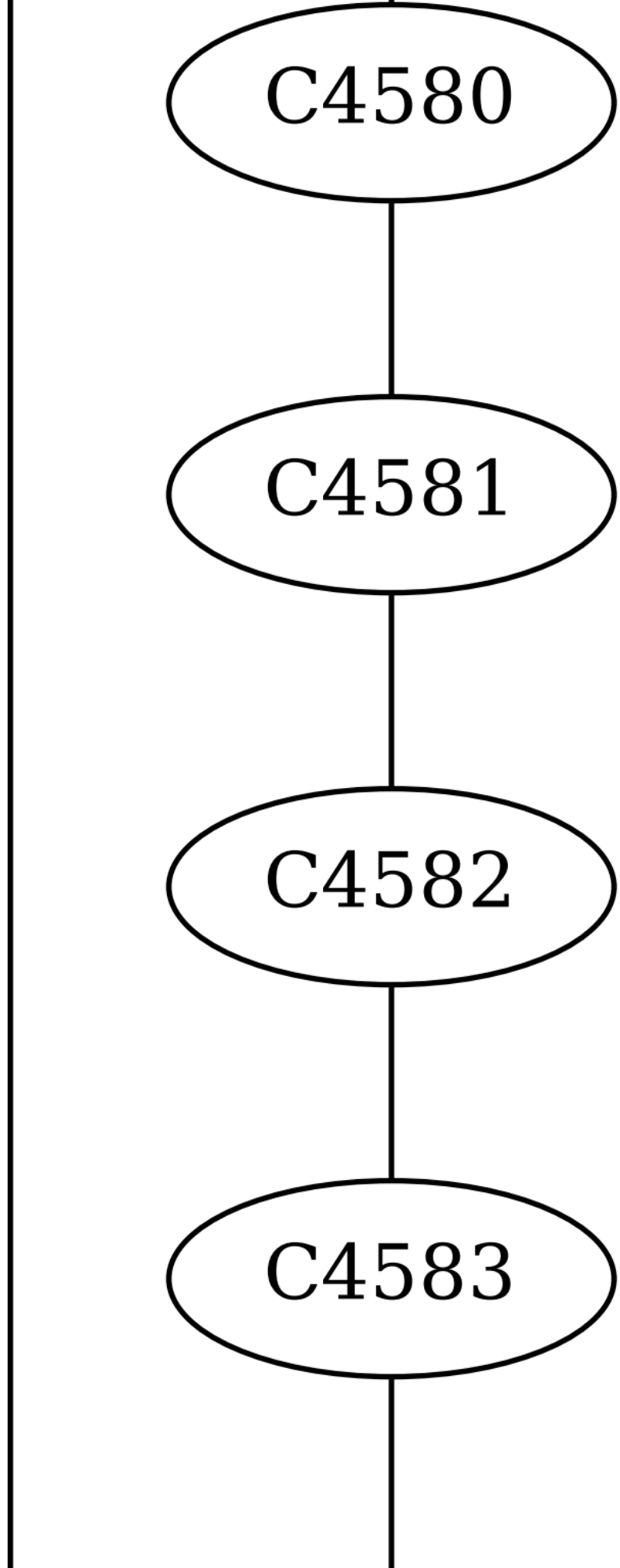
C4580
C4581
C4582
C4583

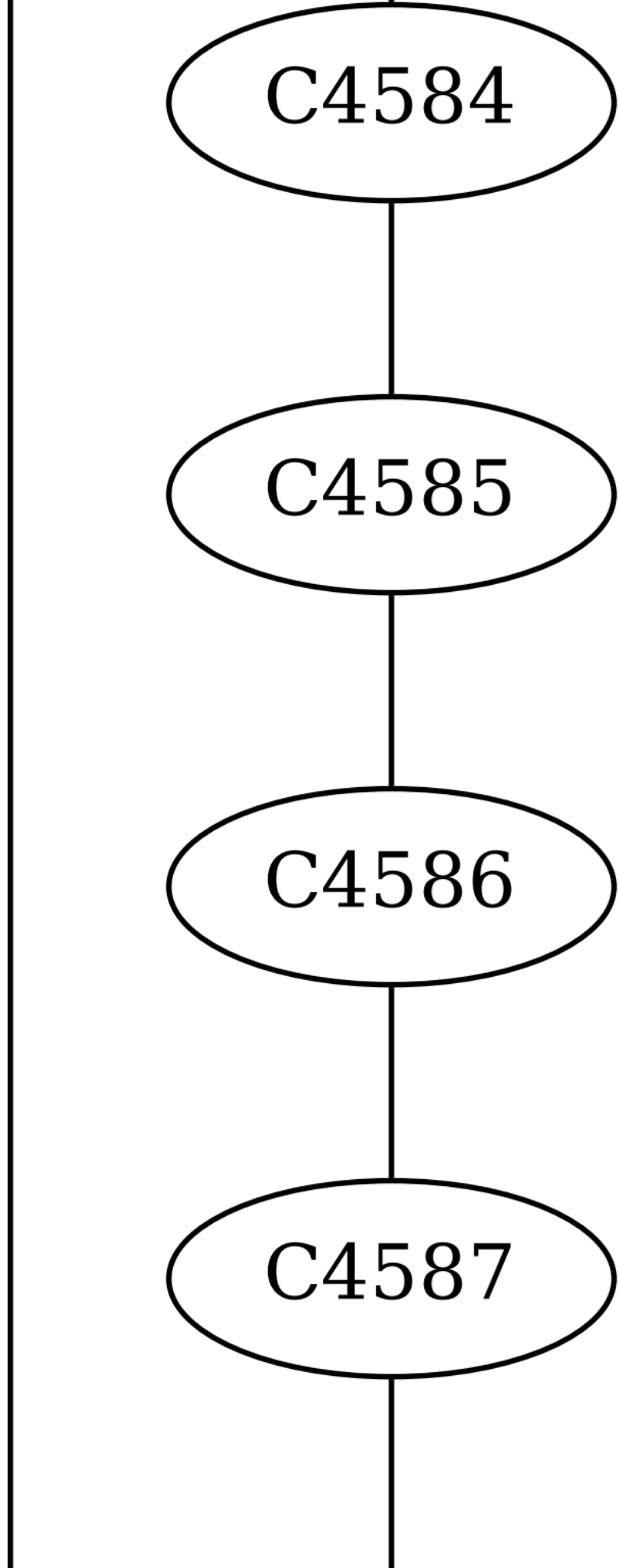
C4584
C4585
C4586
C4587

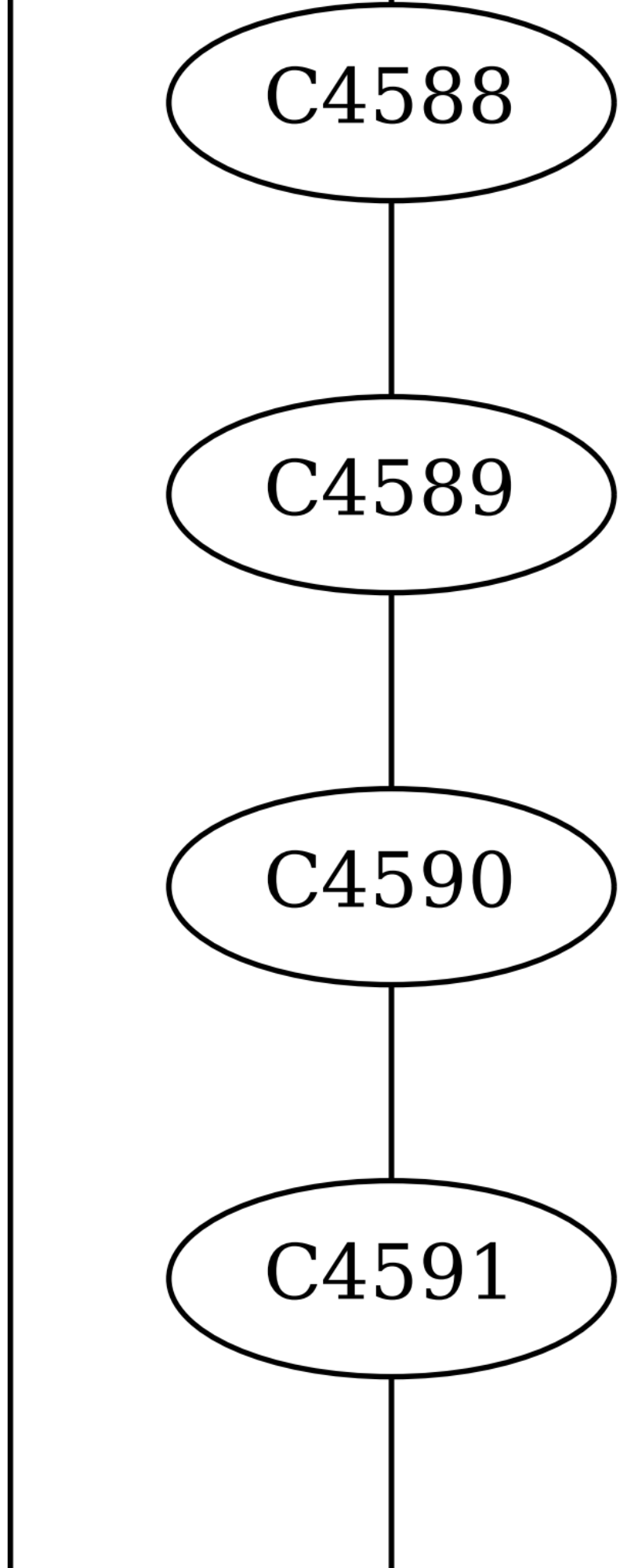
C4588
C4589
C4590
C4591

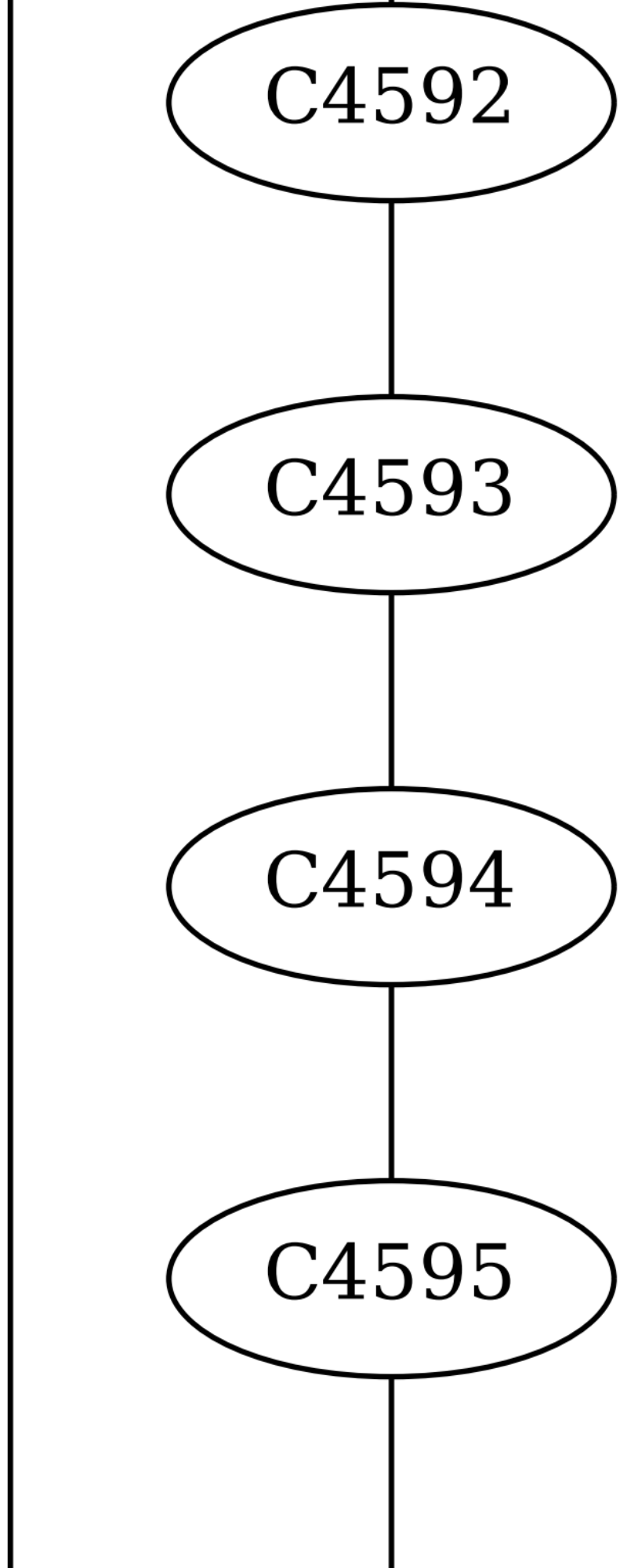
C4592
C4593
C4594
C4595

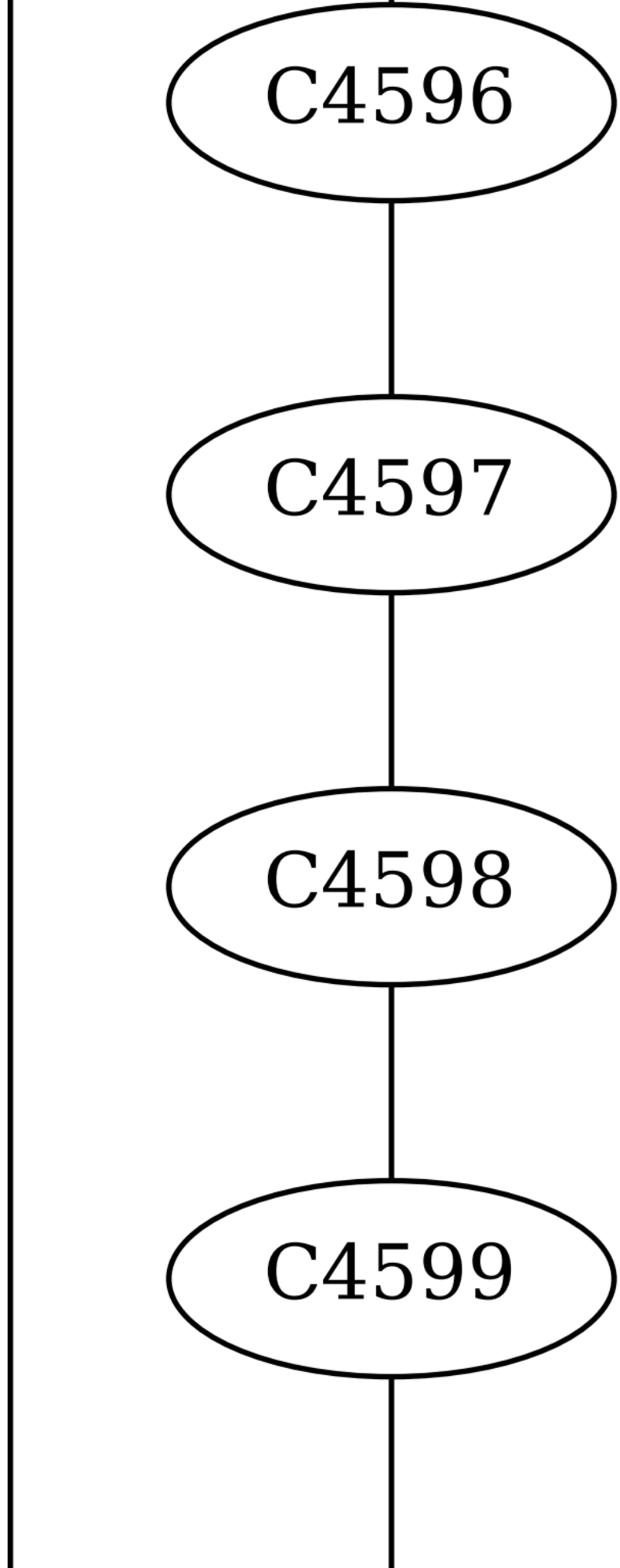
C4596
C4597
C4598
C4599

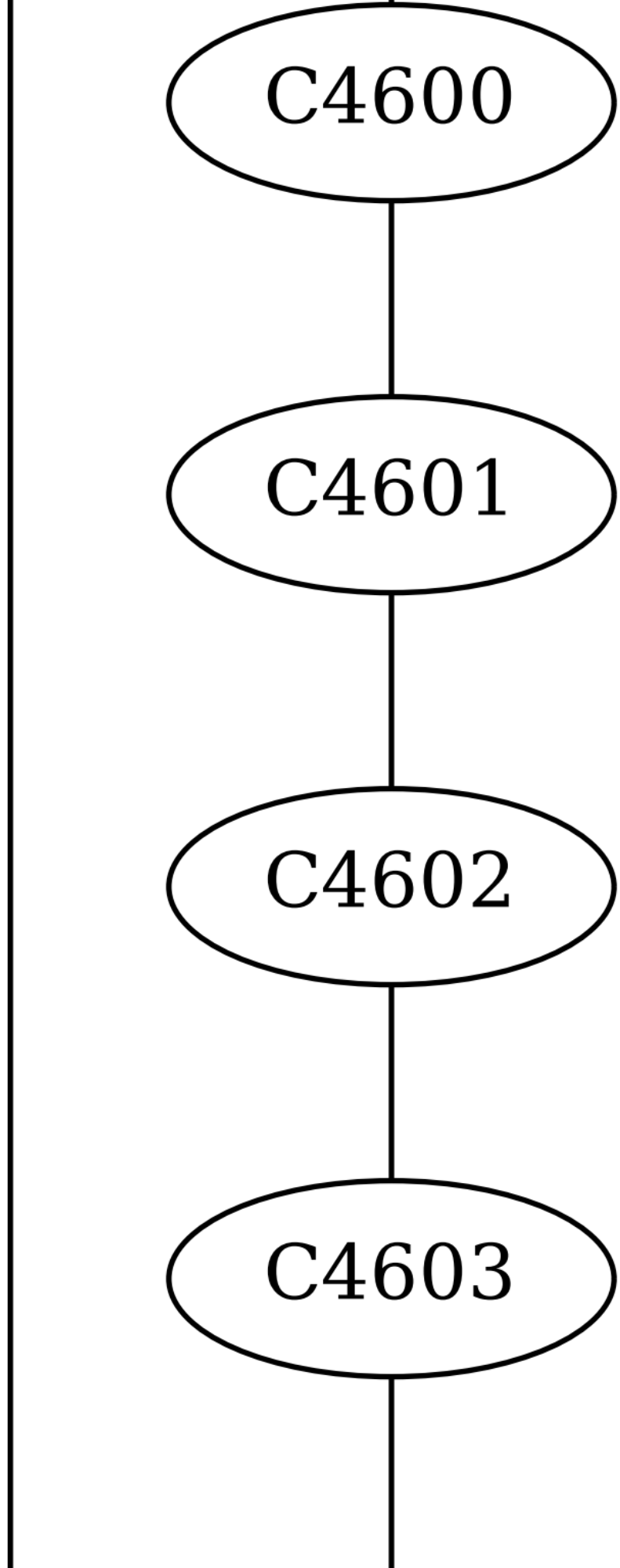
C4600
C4601
C4602
C4603

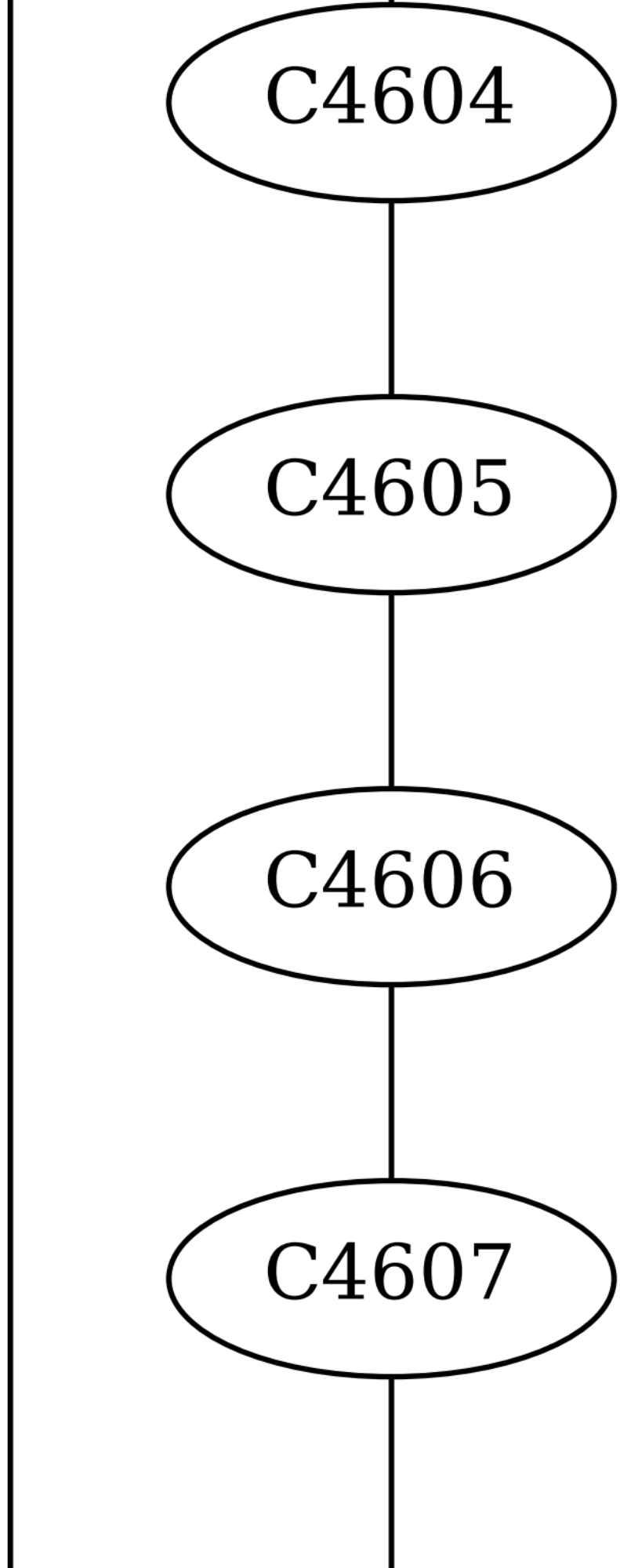
C4604
C4605
C4606
C4607

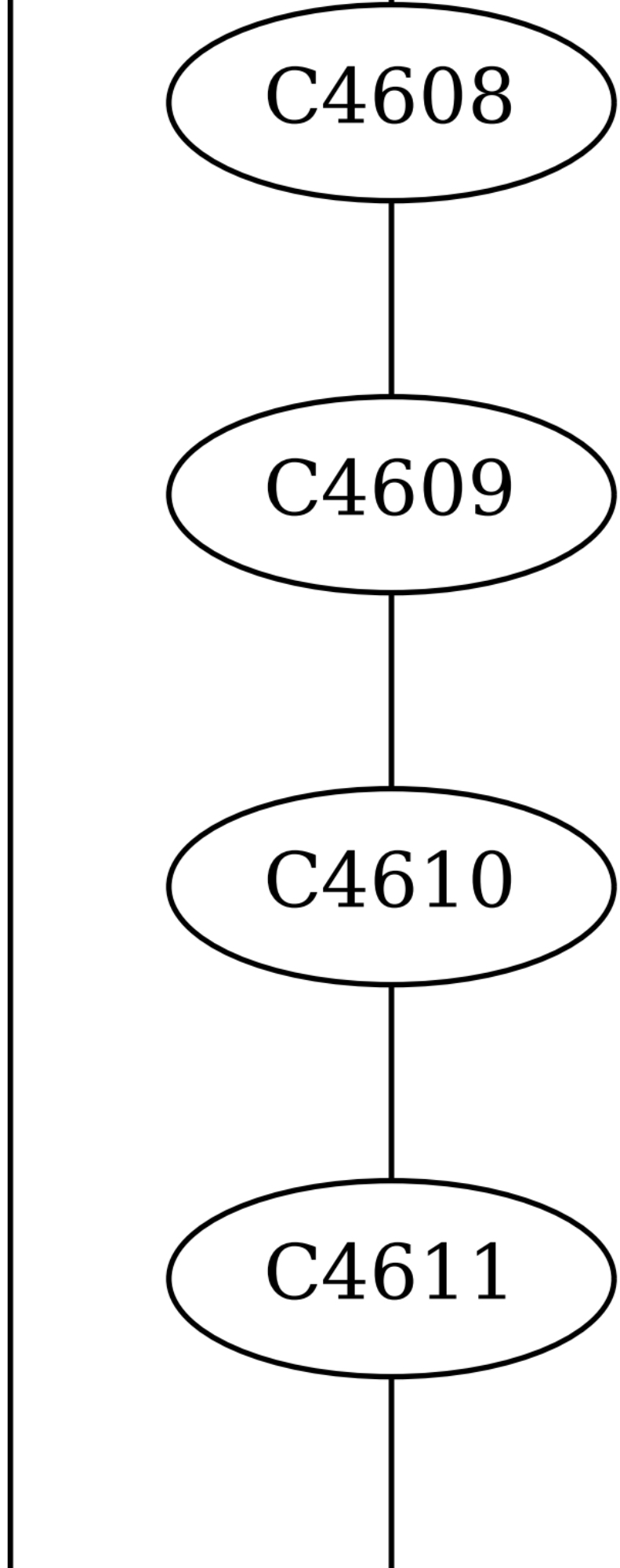
C4608
C4609
C4610
C4611

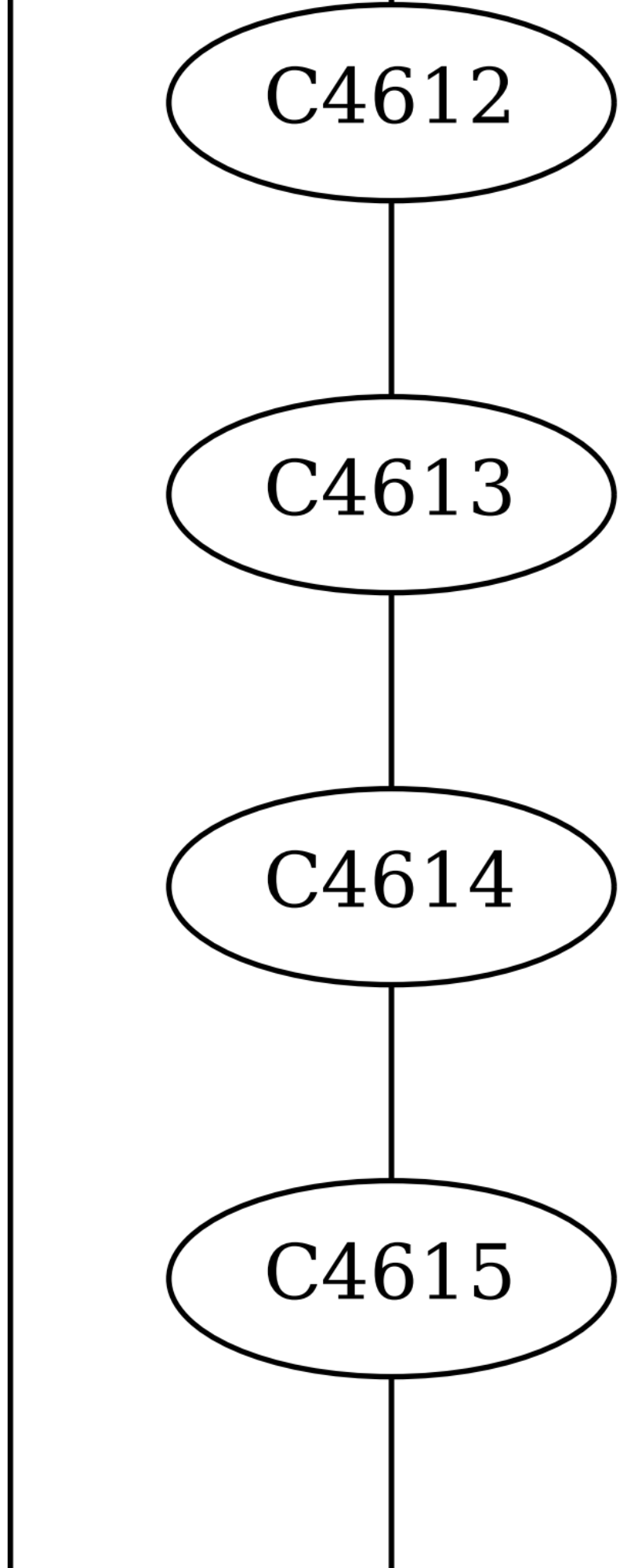
C4612
C4613
C4614
C4615

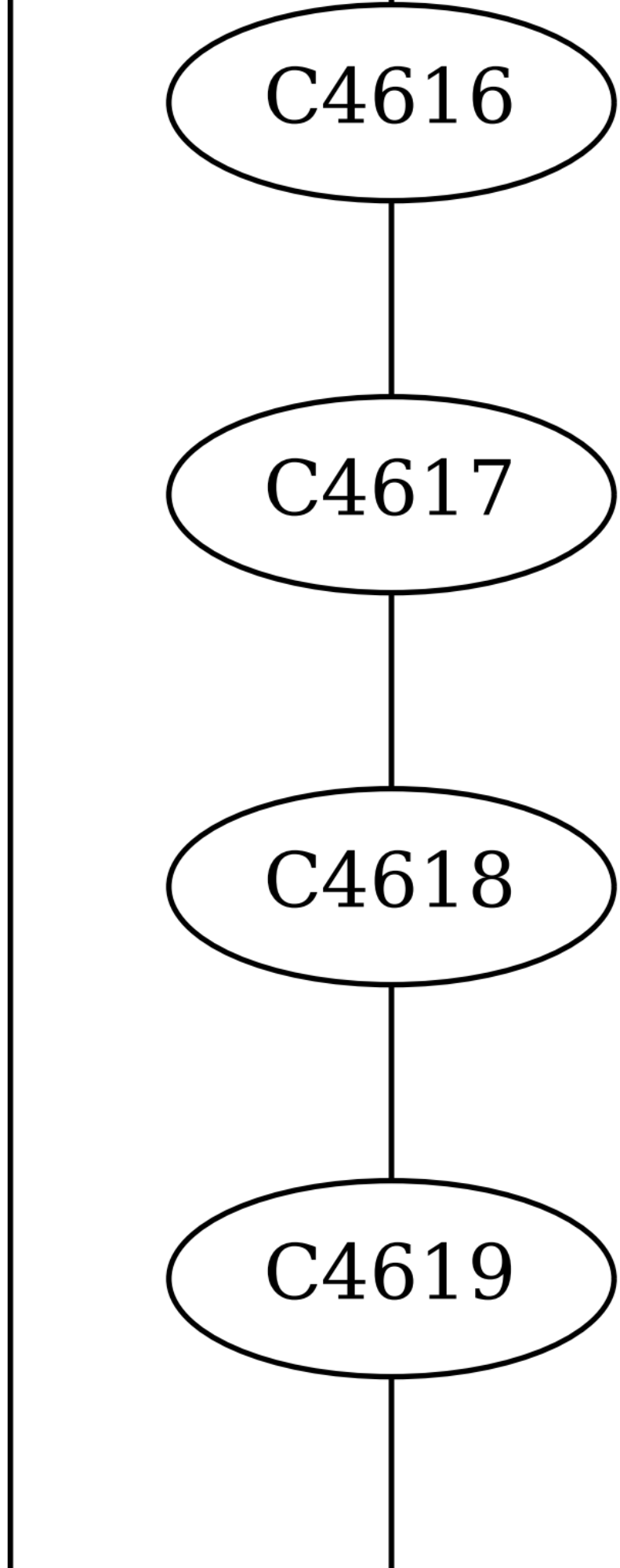
C4616
C4617
C4618
C4619

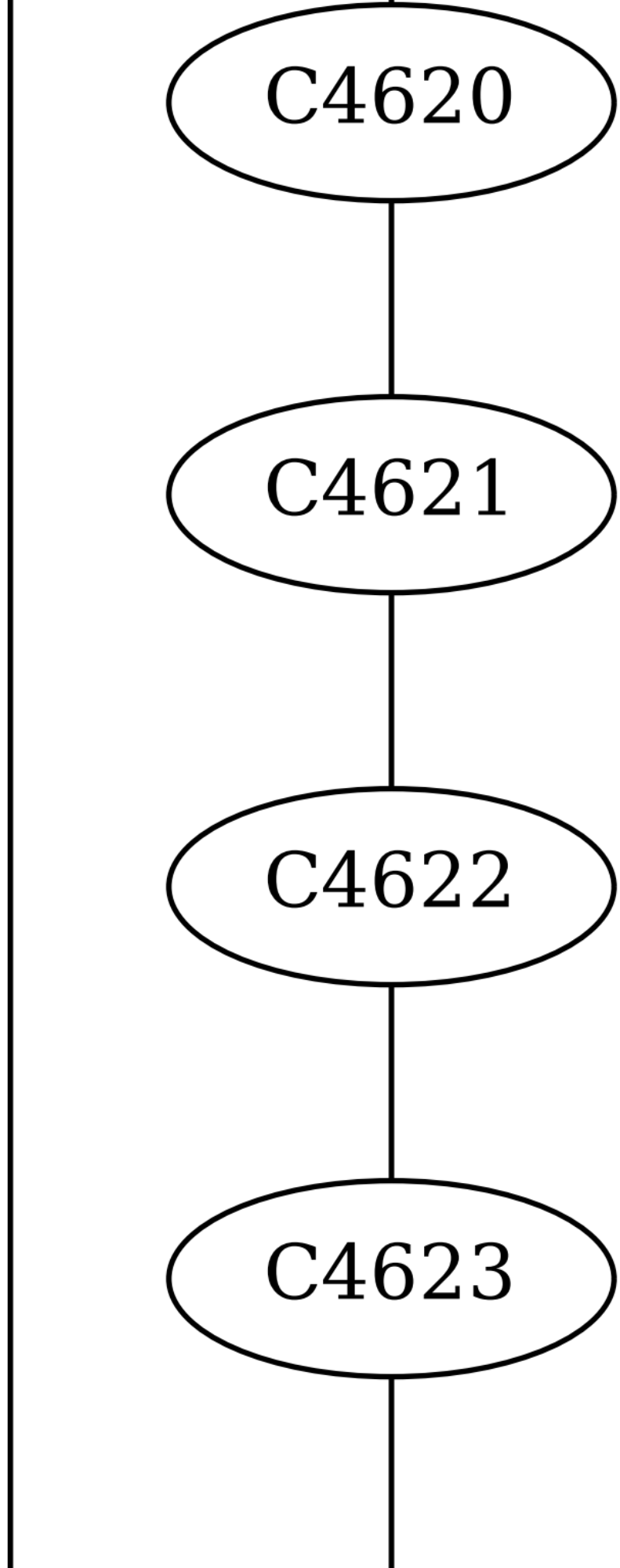
C4620
C4621
C4622
C4623

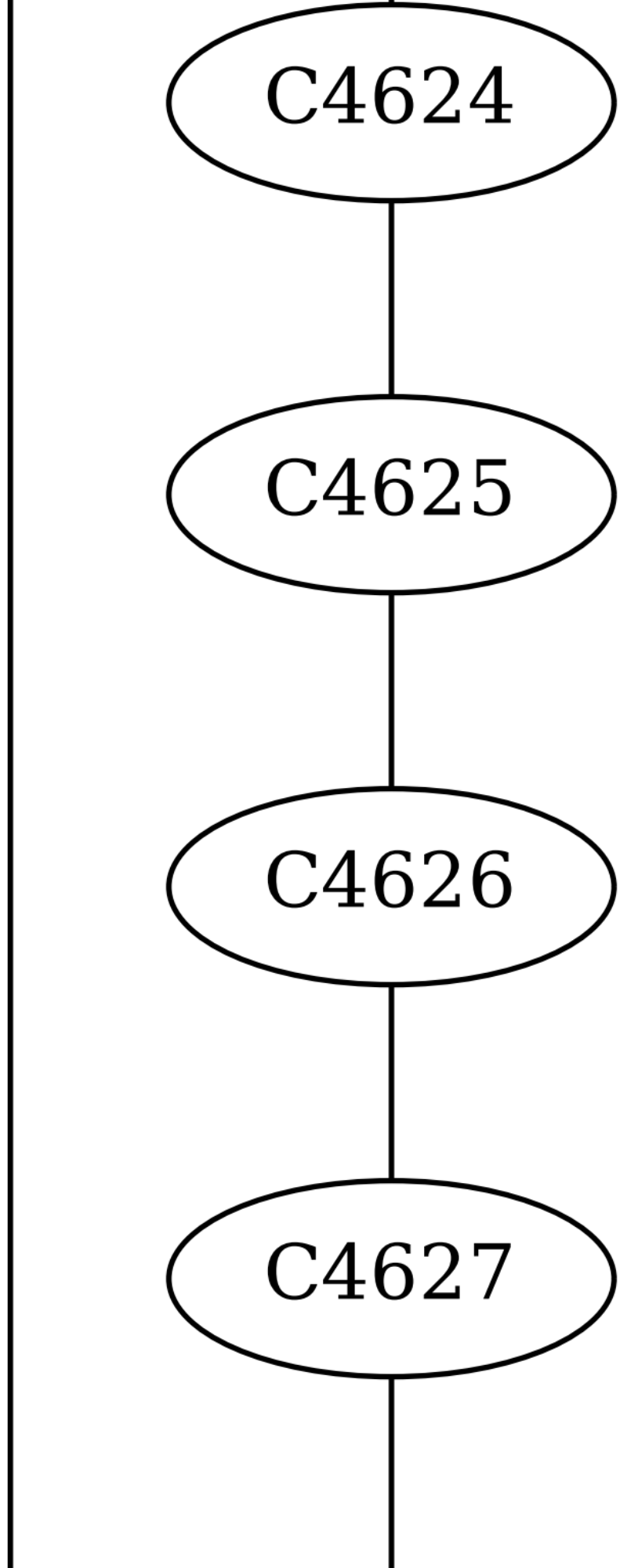
C4624
C4625
C4626
C4627

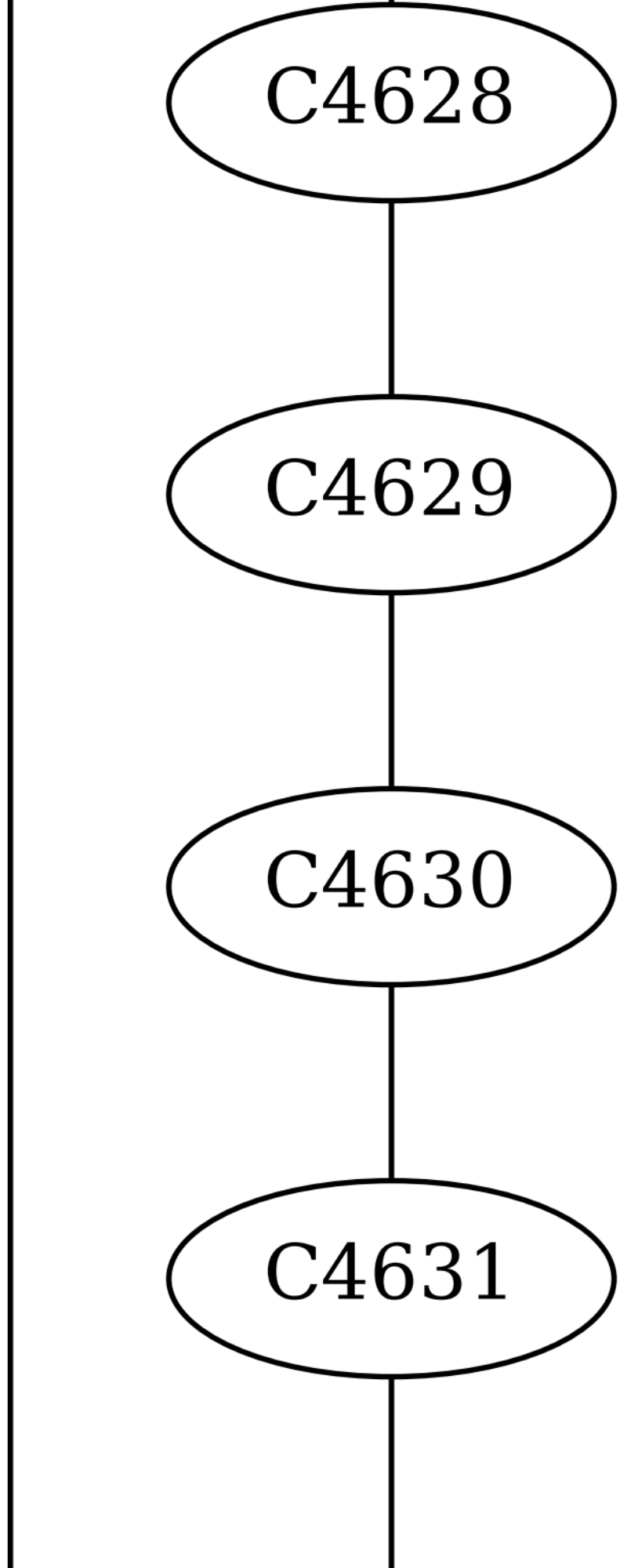
C4628
C4629
C4630
C4631

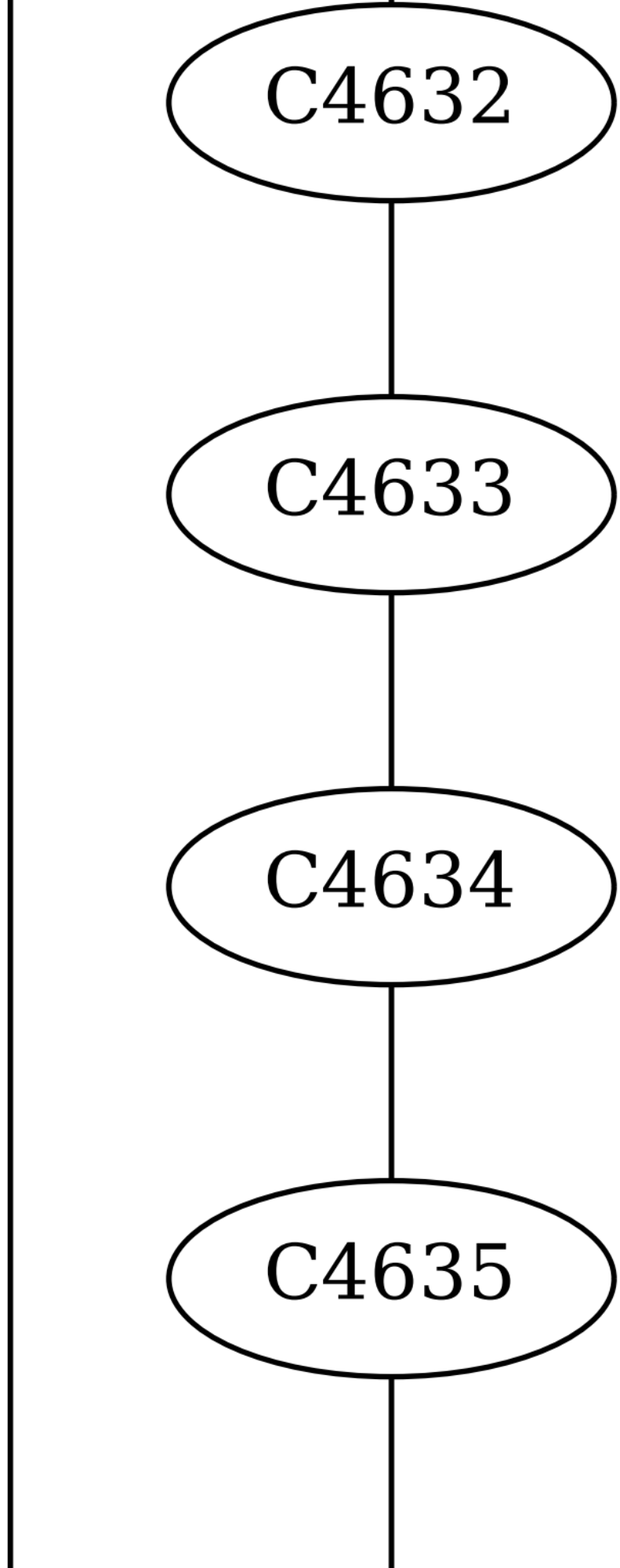
C4632
C4633
C4634
C4635

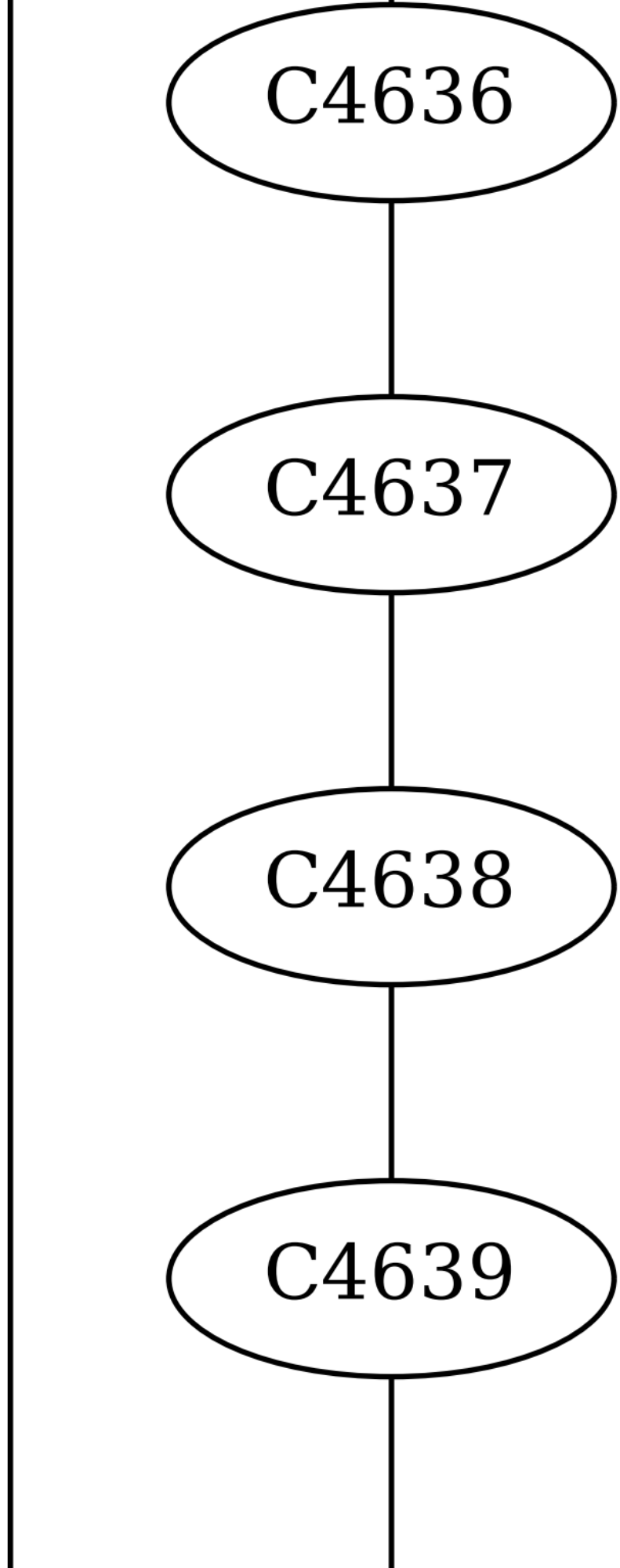
C4636
C4637
C4638
C4639

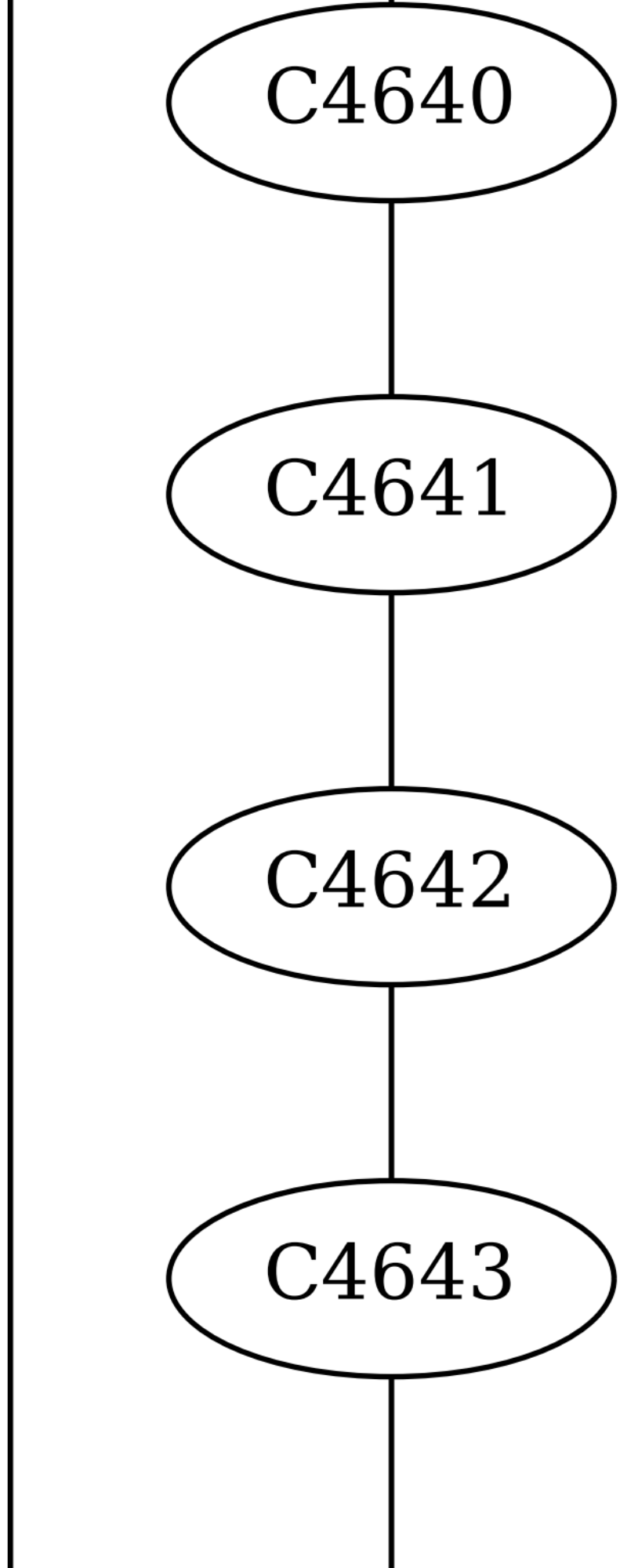
C4640
C4641
C4642
C4643

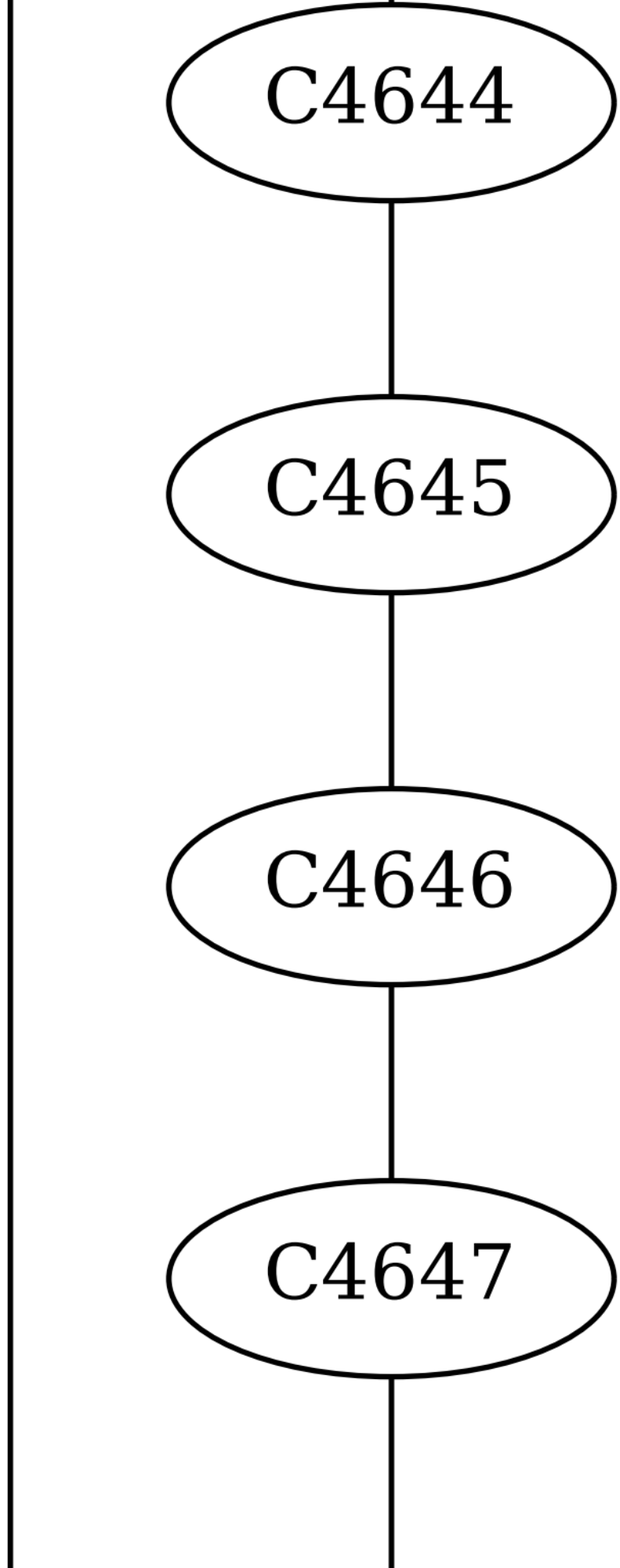
C4644
C4645
C4646
C4647

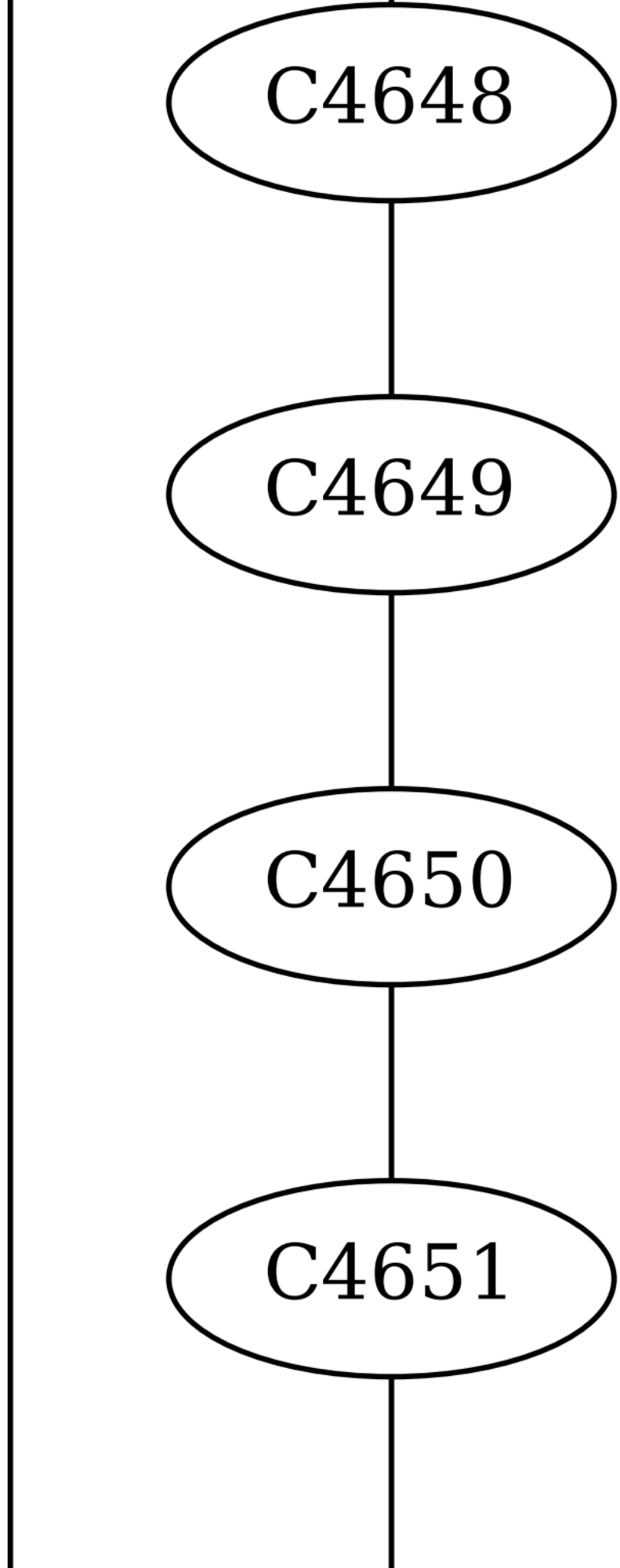
C4648
C4649
C4650
C4651

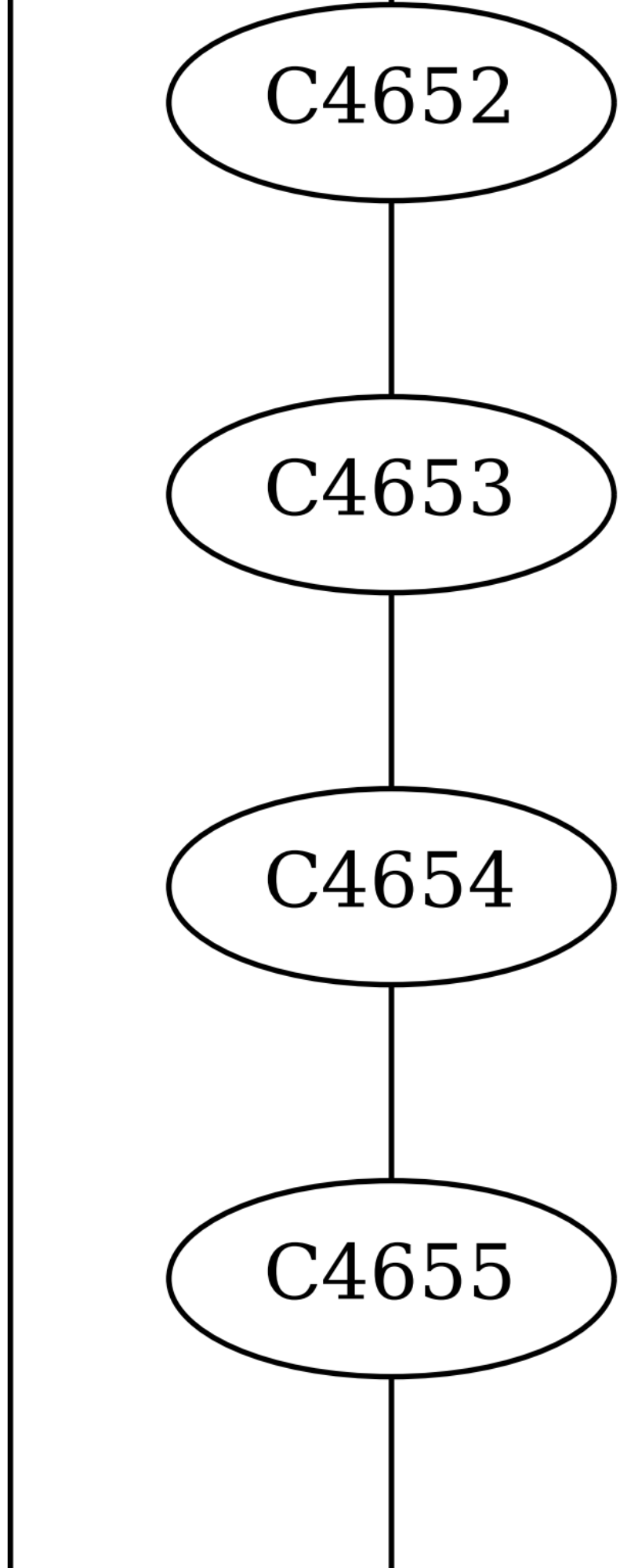
C4652
C4653
C4654
C4655

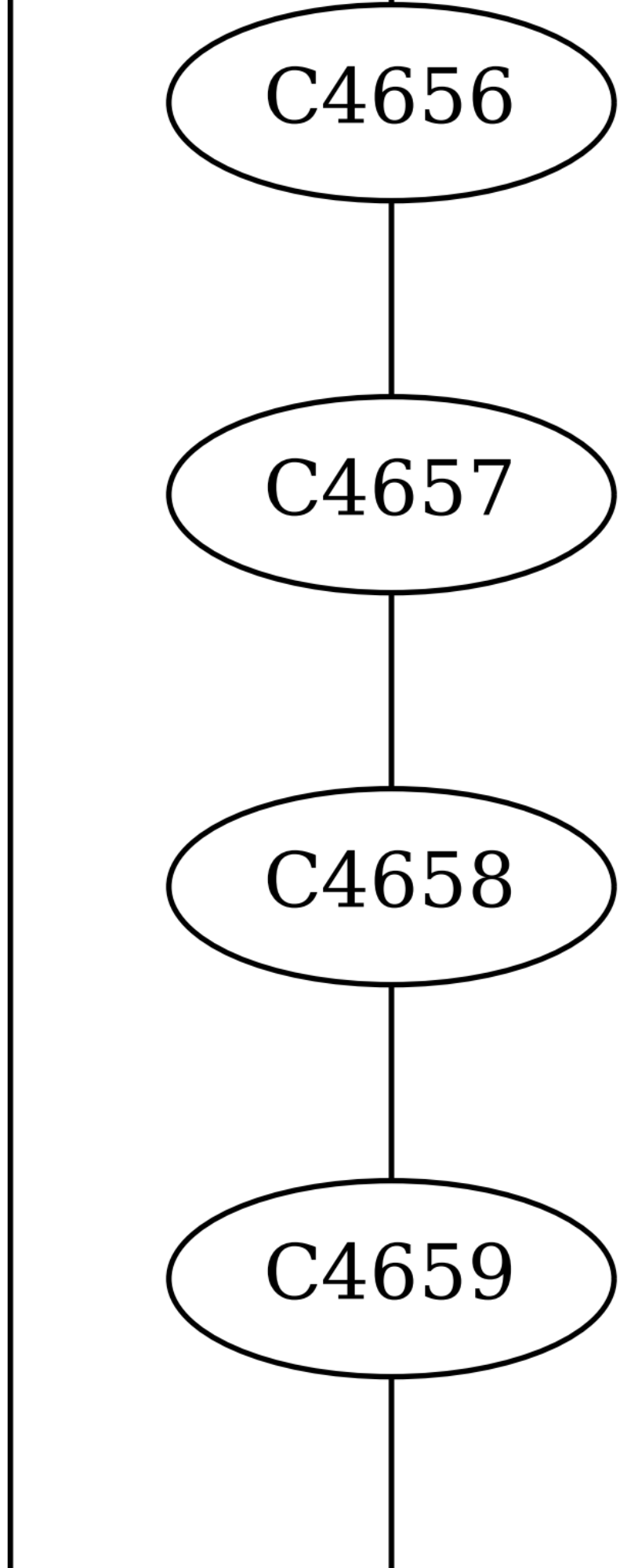
C4656
C4657
C4658
C4659

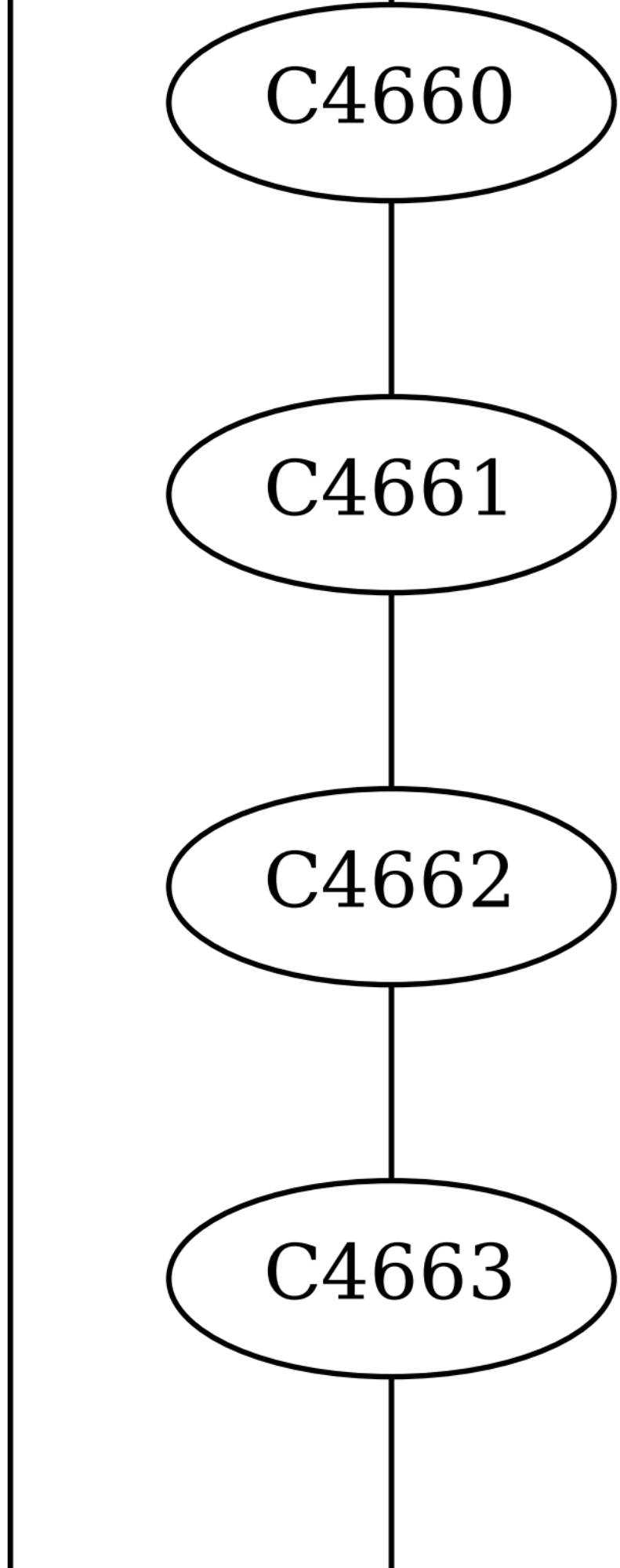
C4660
C4661
C4662
C4663

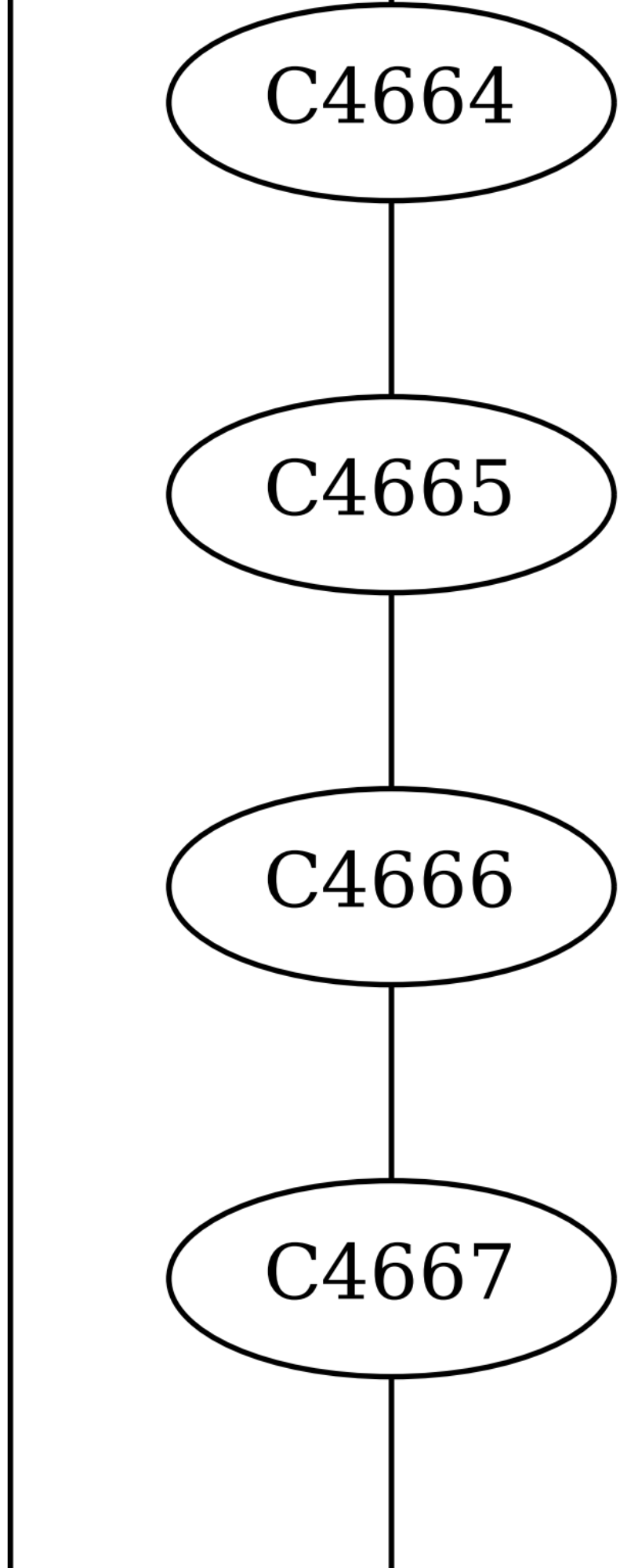
C4664
C4665
C4666
C4667

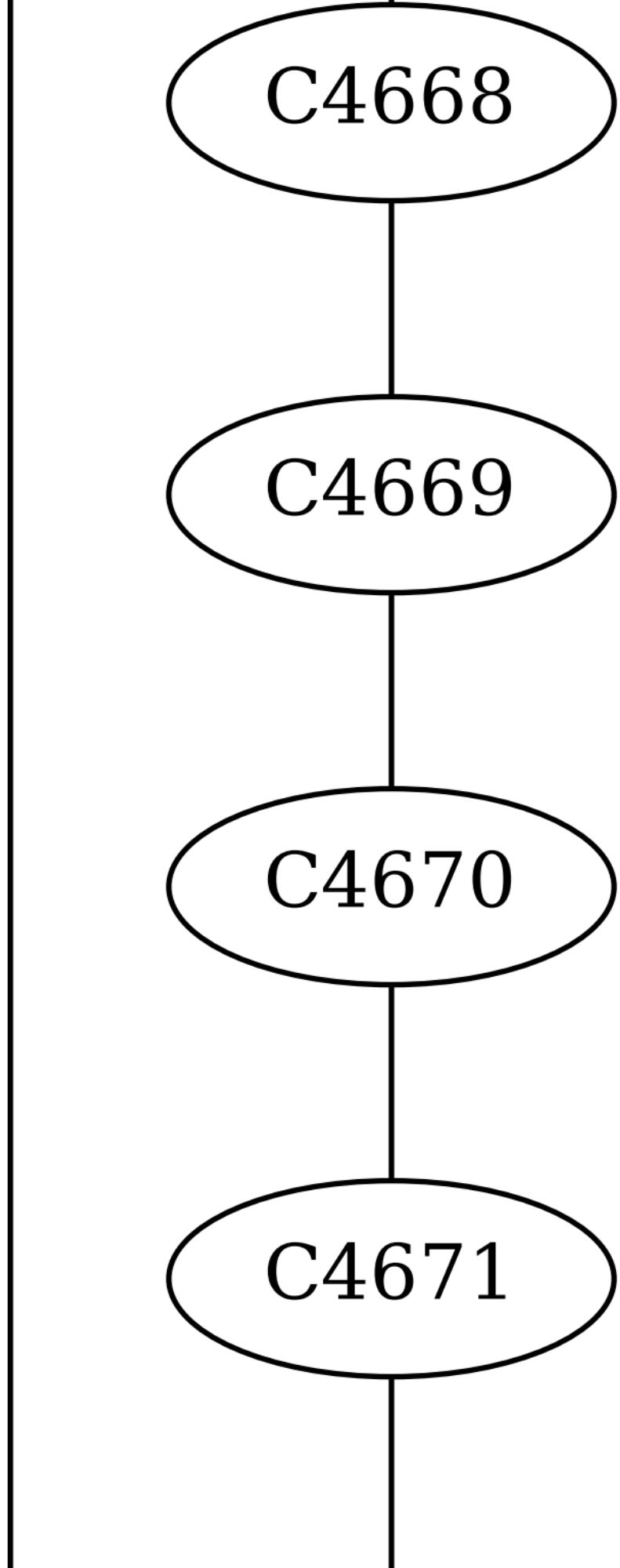
C4668
C4669
C4670
C4671

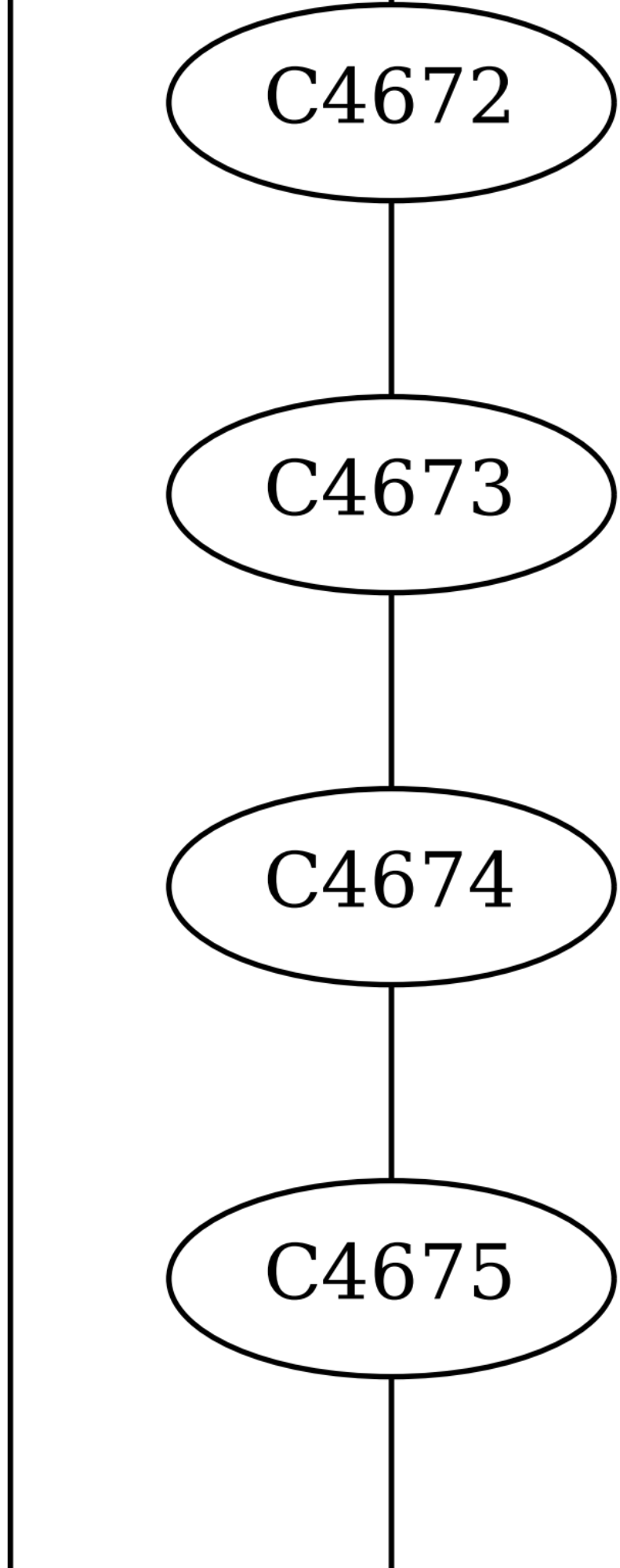
C4672
C4673
C4674
C4675

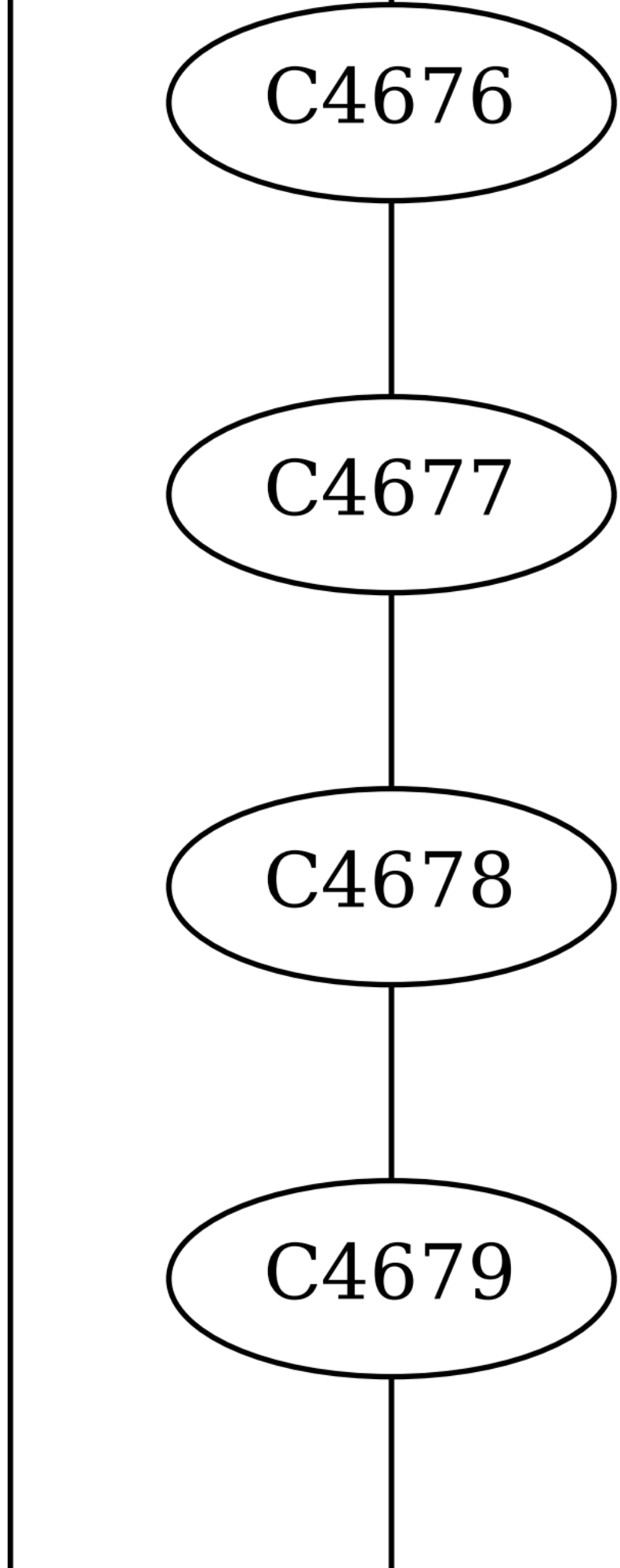
C4676
C4677
C4678
C4679

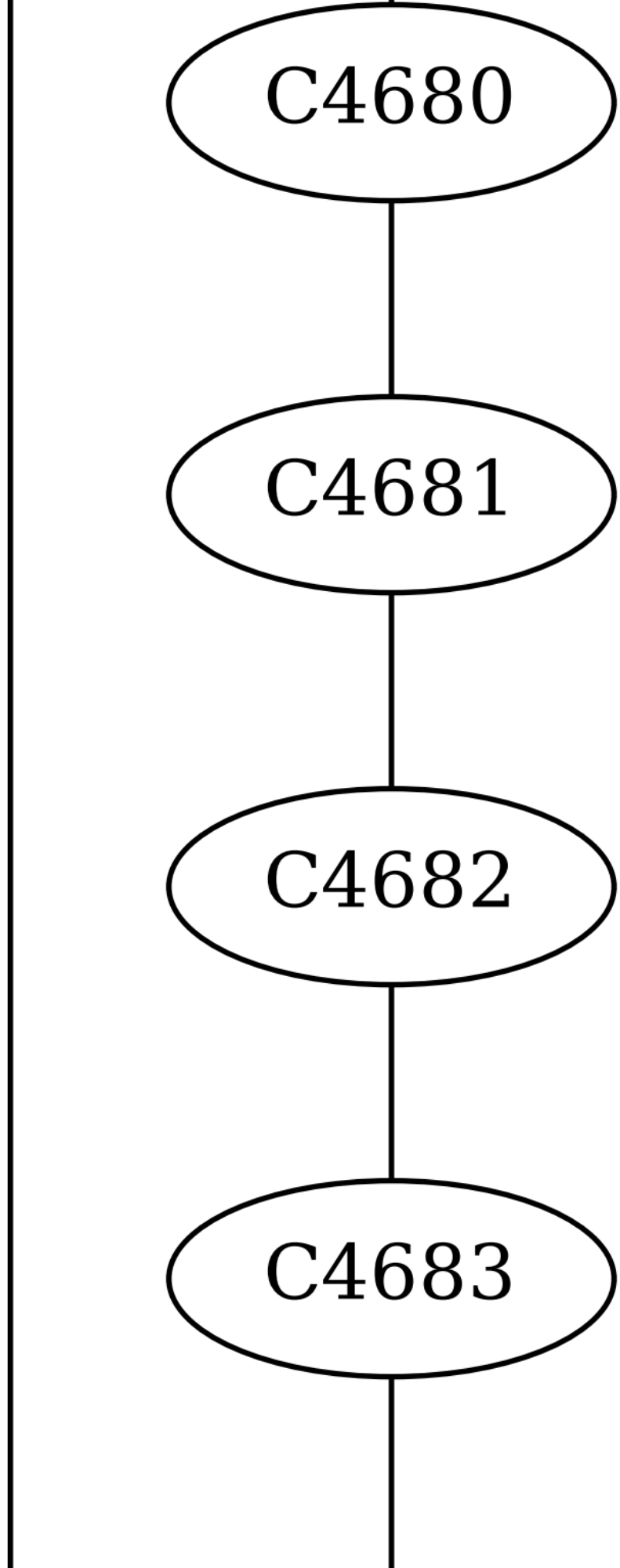
C4680
C4681
C4682
C4683

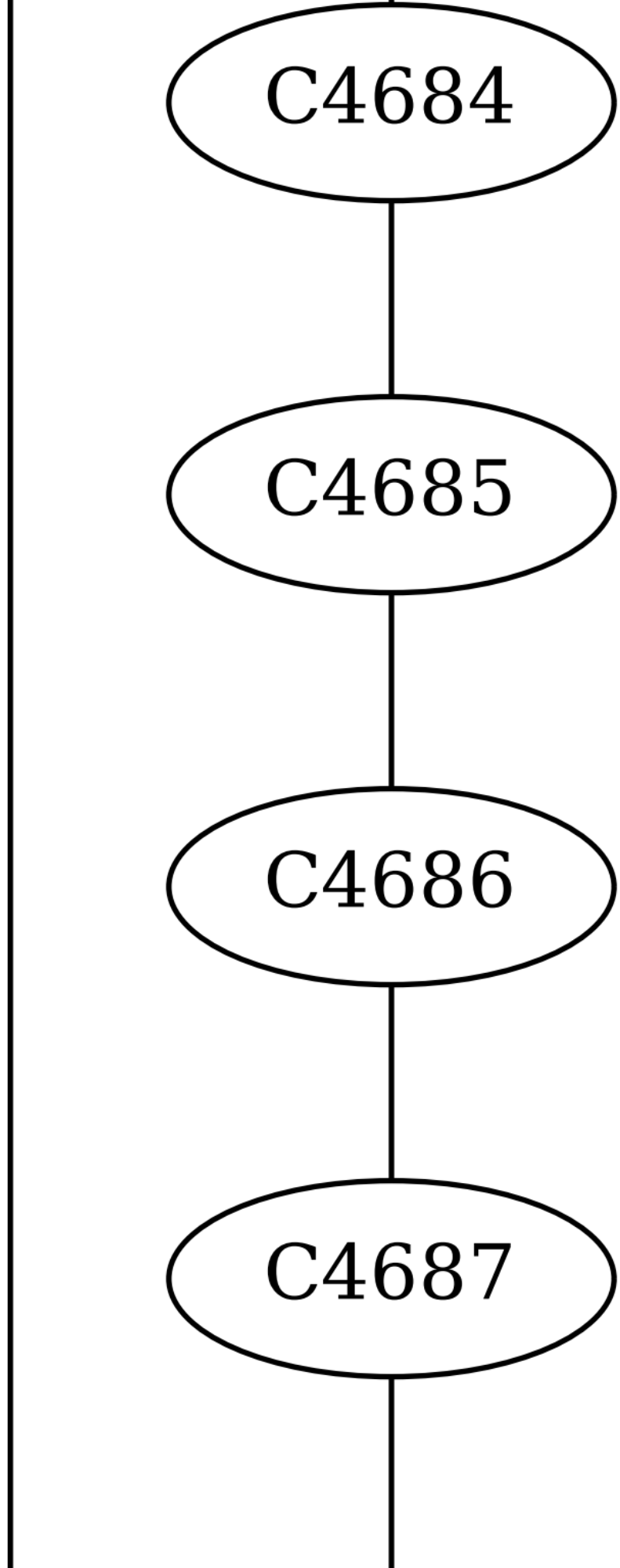
C4684
C4685
C4686
C4687

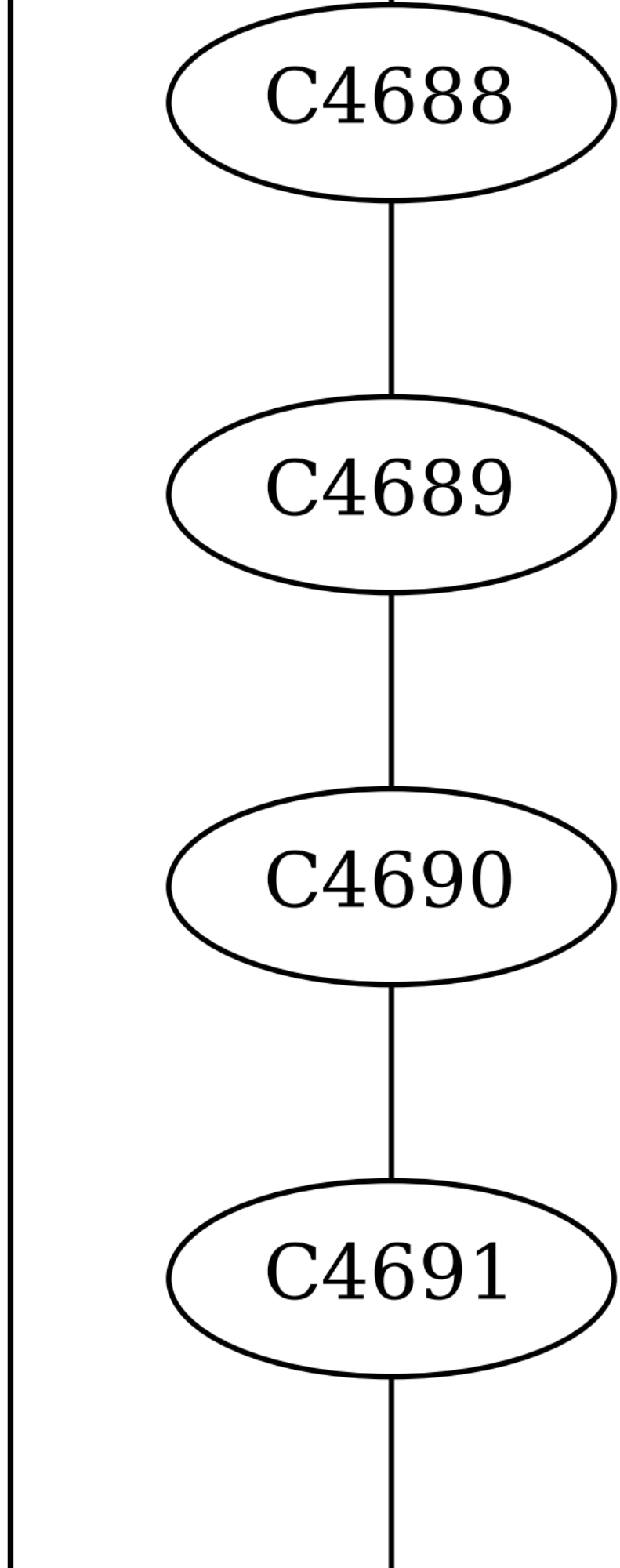
C4688
C4689
C4690
C4691

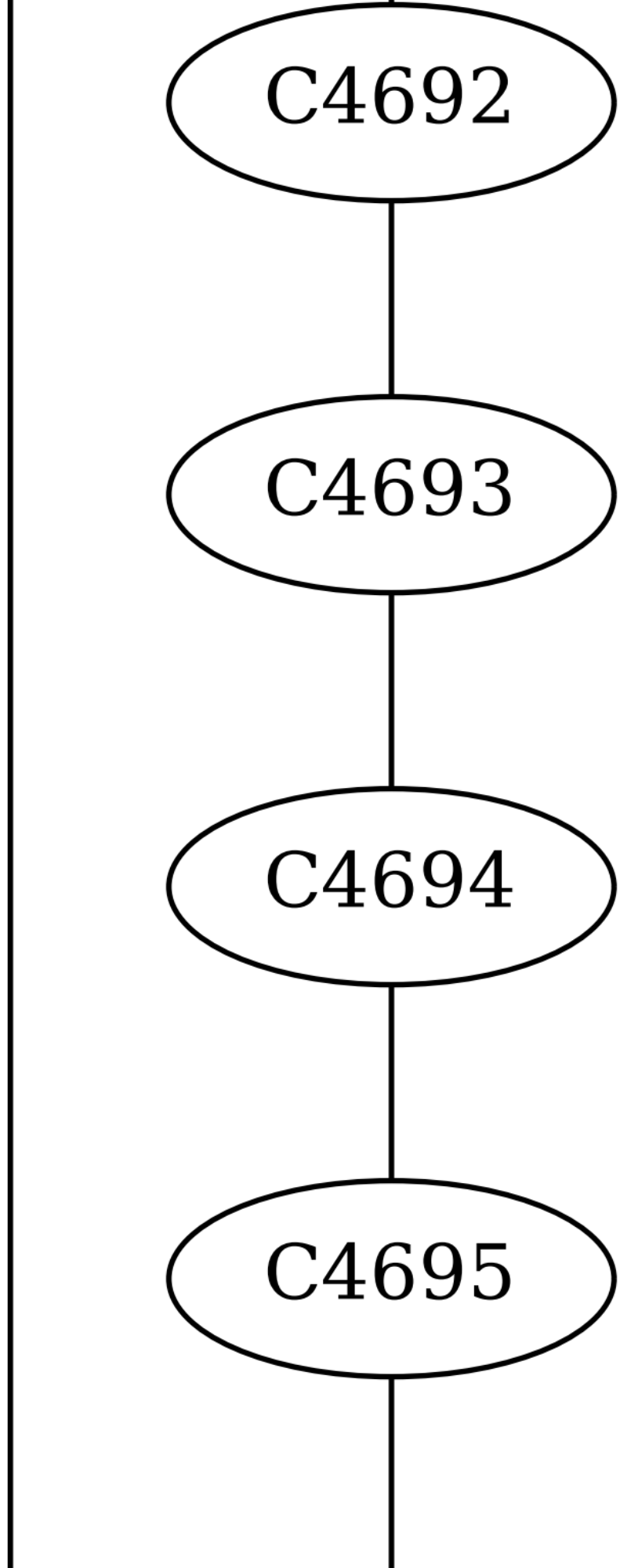
C4692
C4693
C4694
C4695

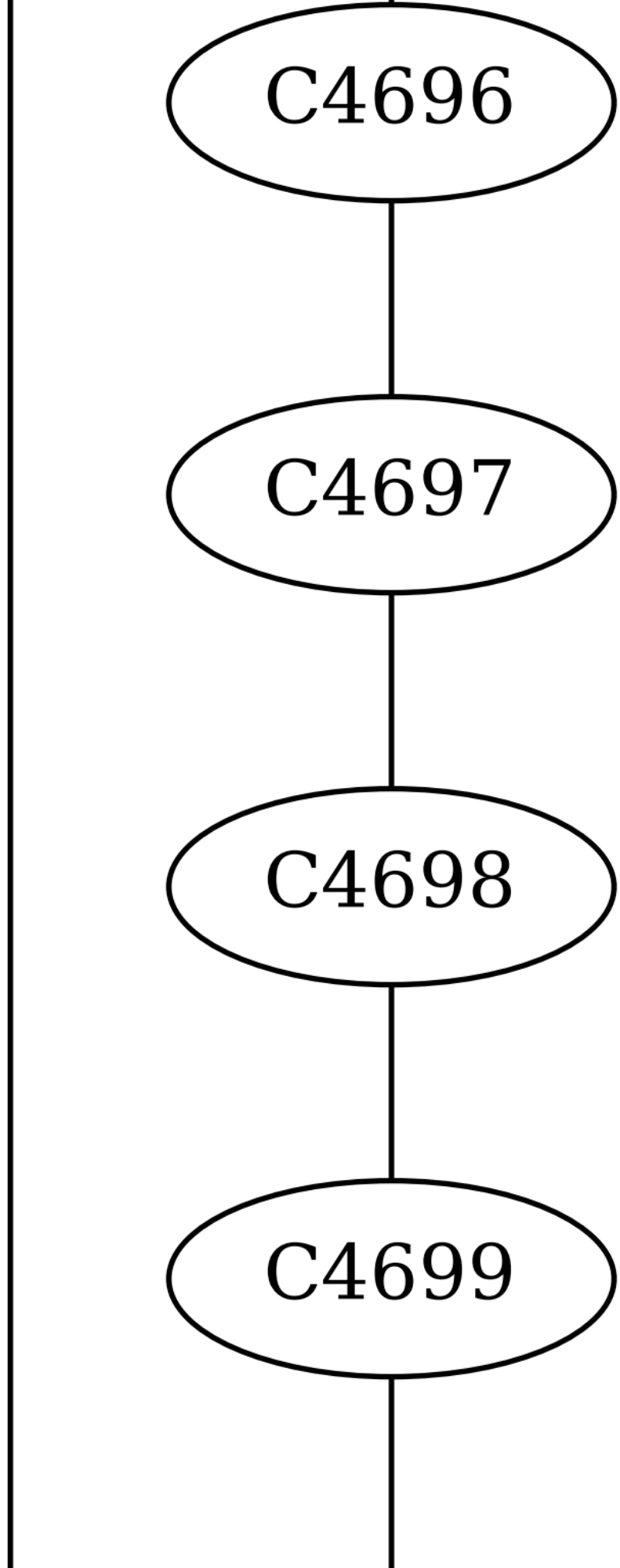
C4696
C4697
C4698
C4699

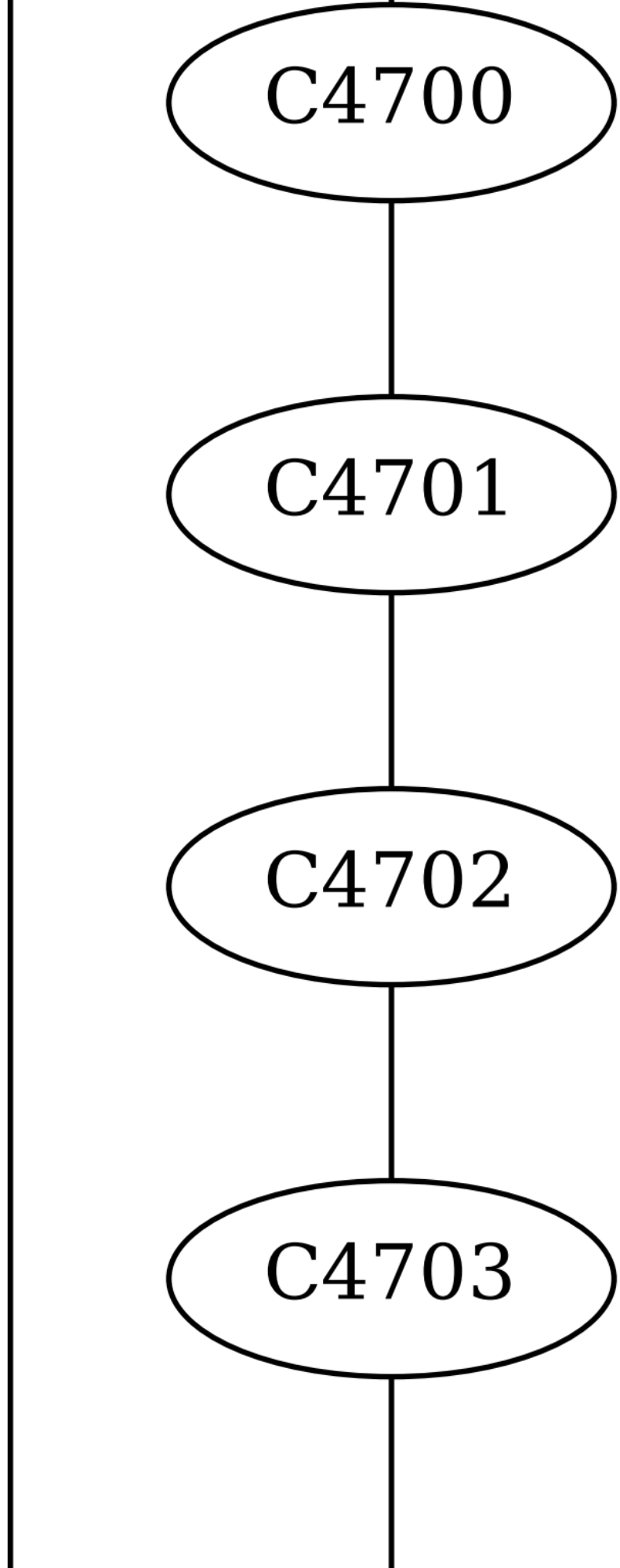
C4700
C4701
C4702
C4703

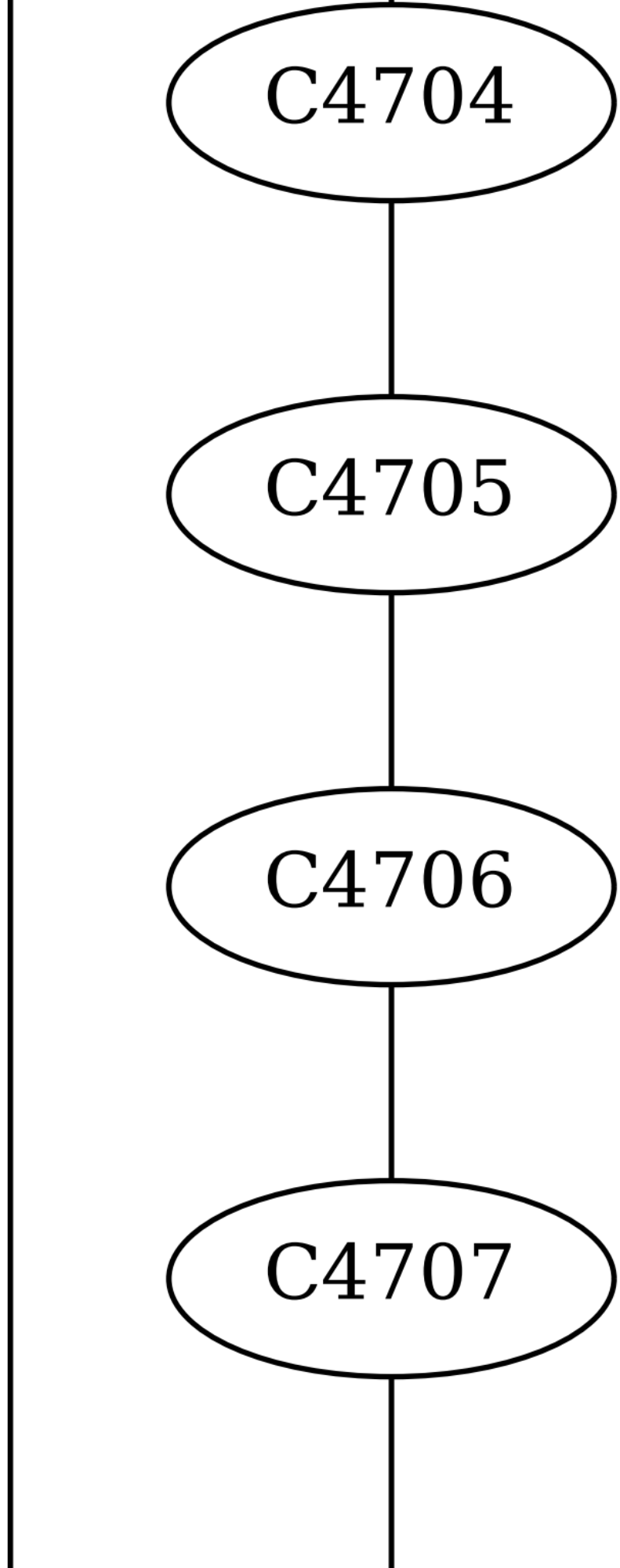
C4704
C4705
C4706
C4707

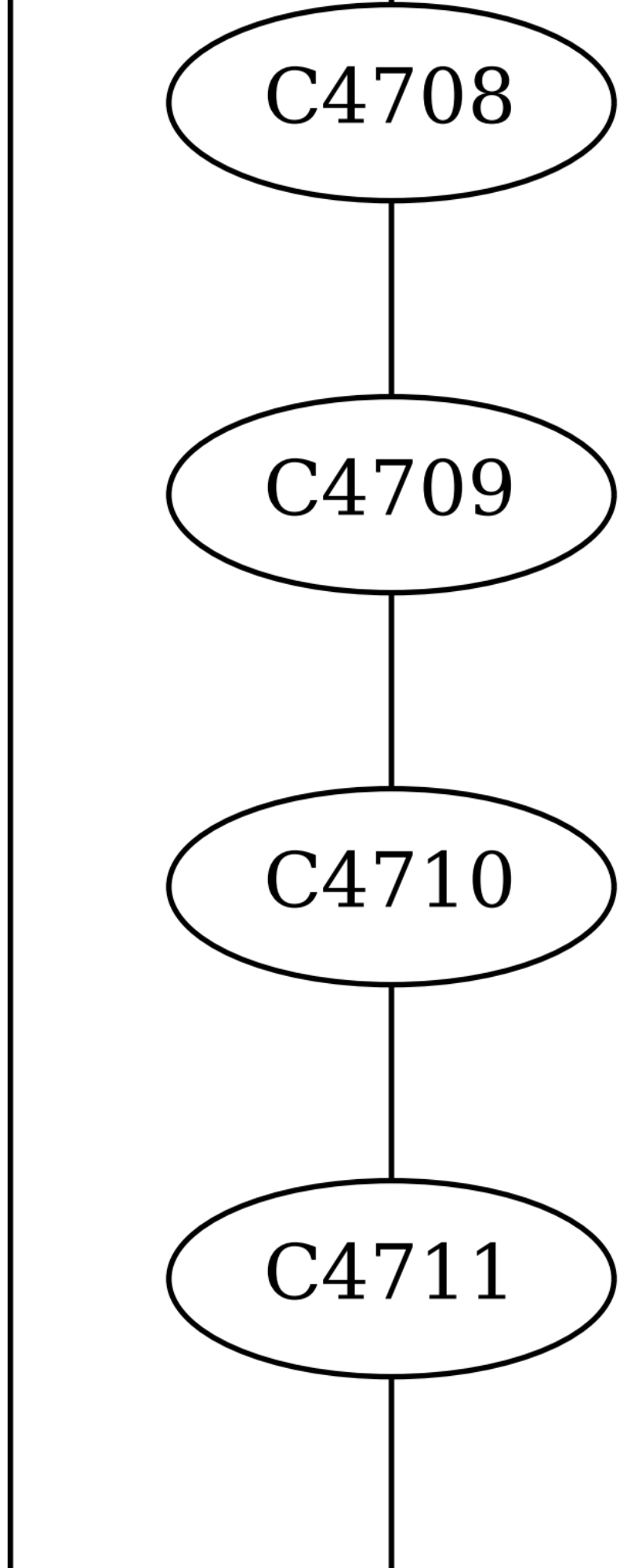
C4708
C4709
C4710
C4711

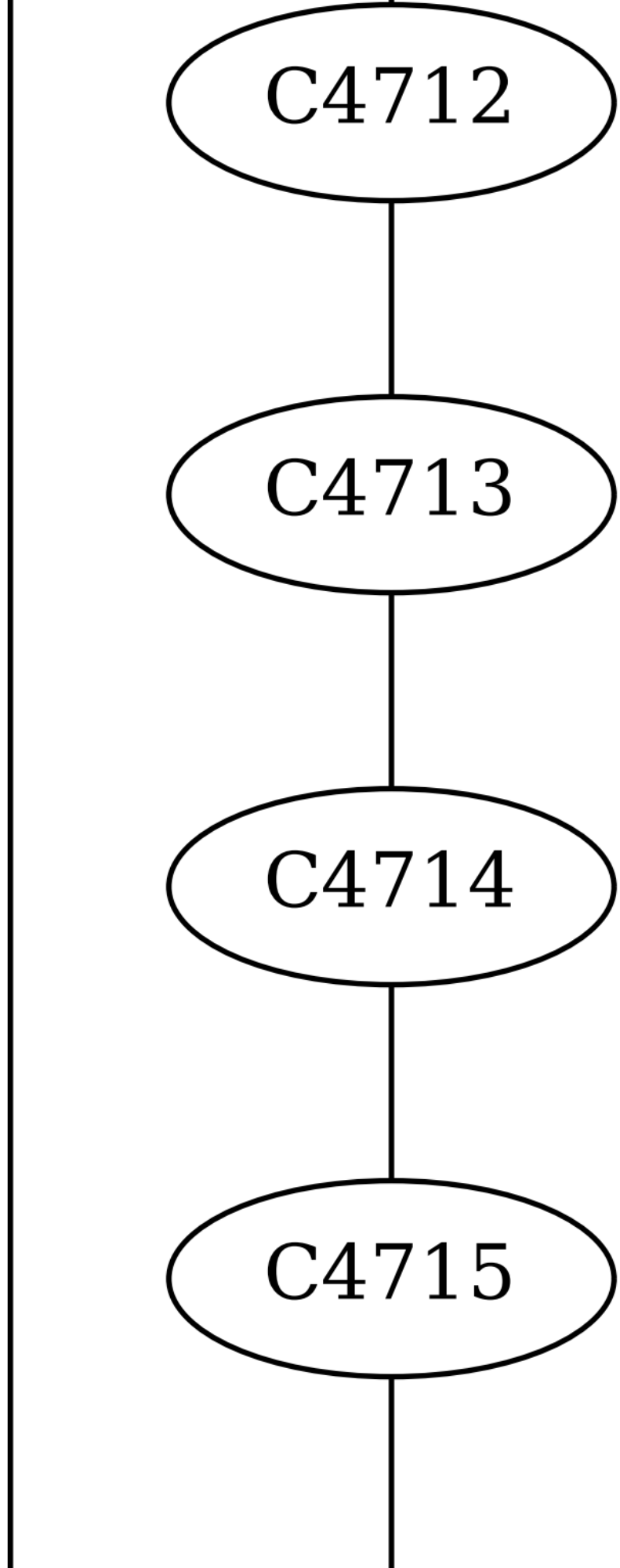
C4712
C4713
C4714
C4715

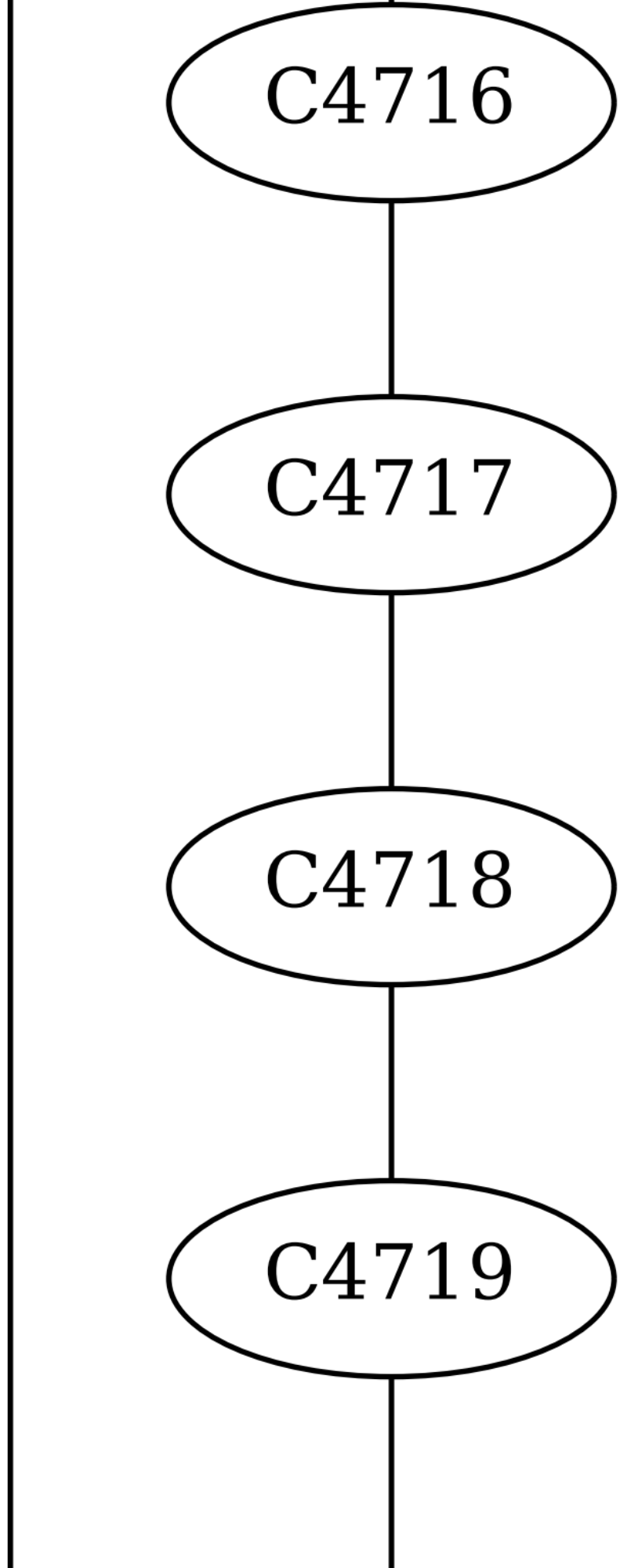
C4716
C4717
C4718
C4719

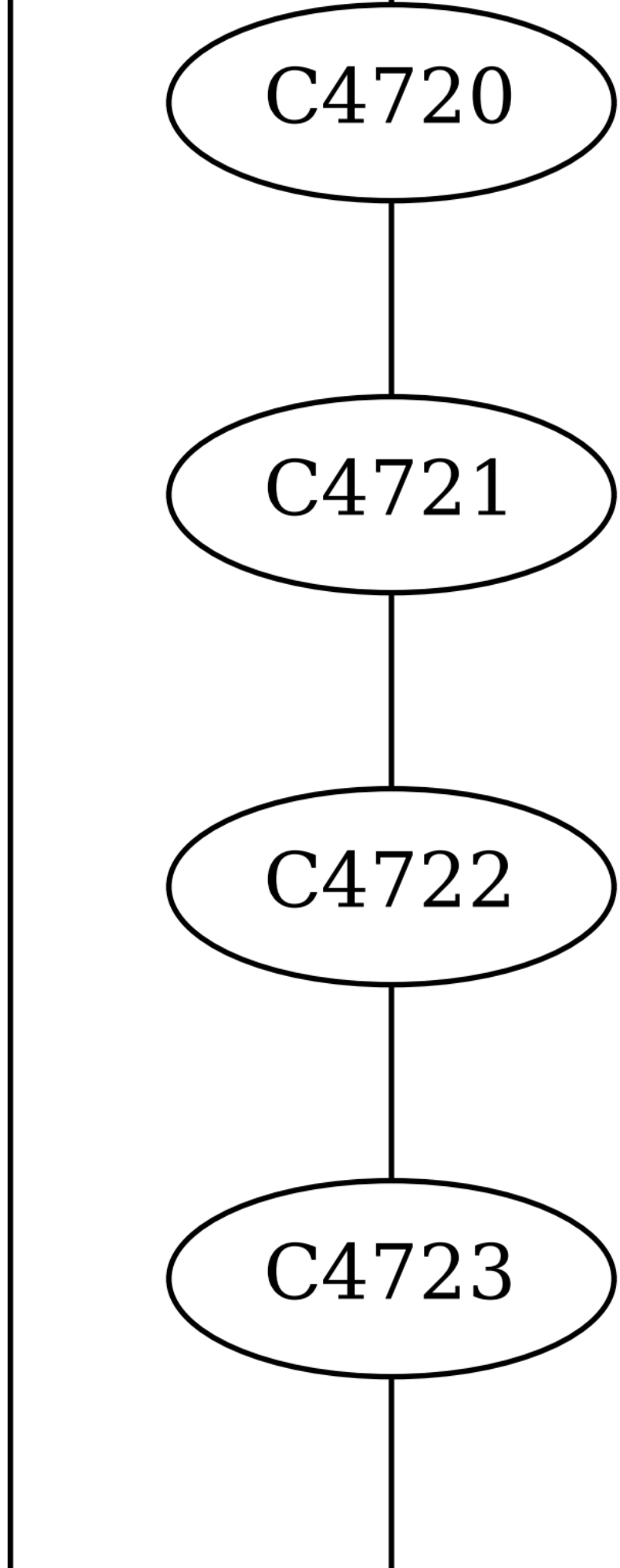
C4720
C4721
C4722
C4723

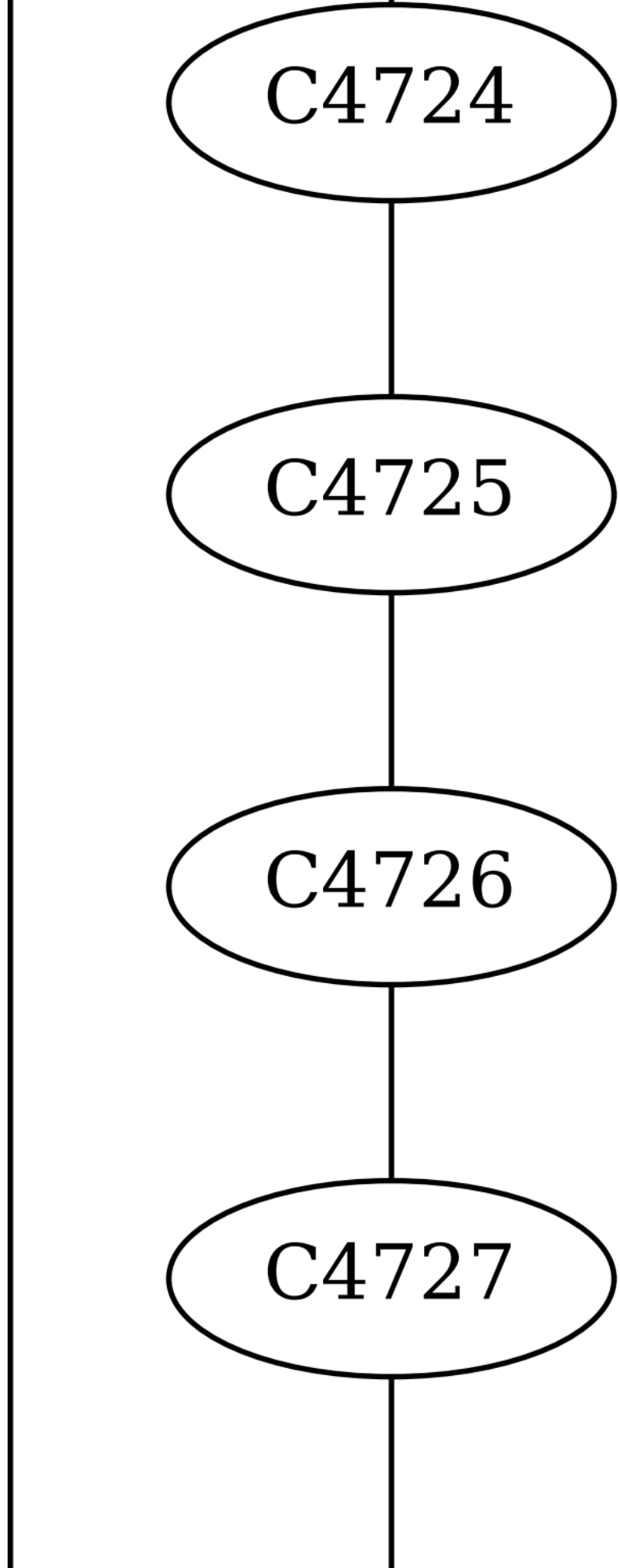
C4724
C4725
C4726
C4727

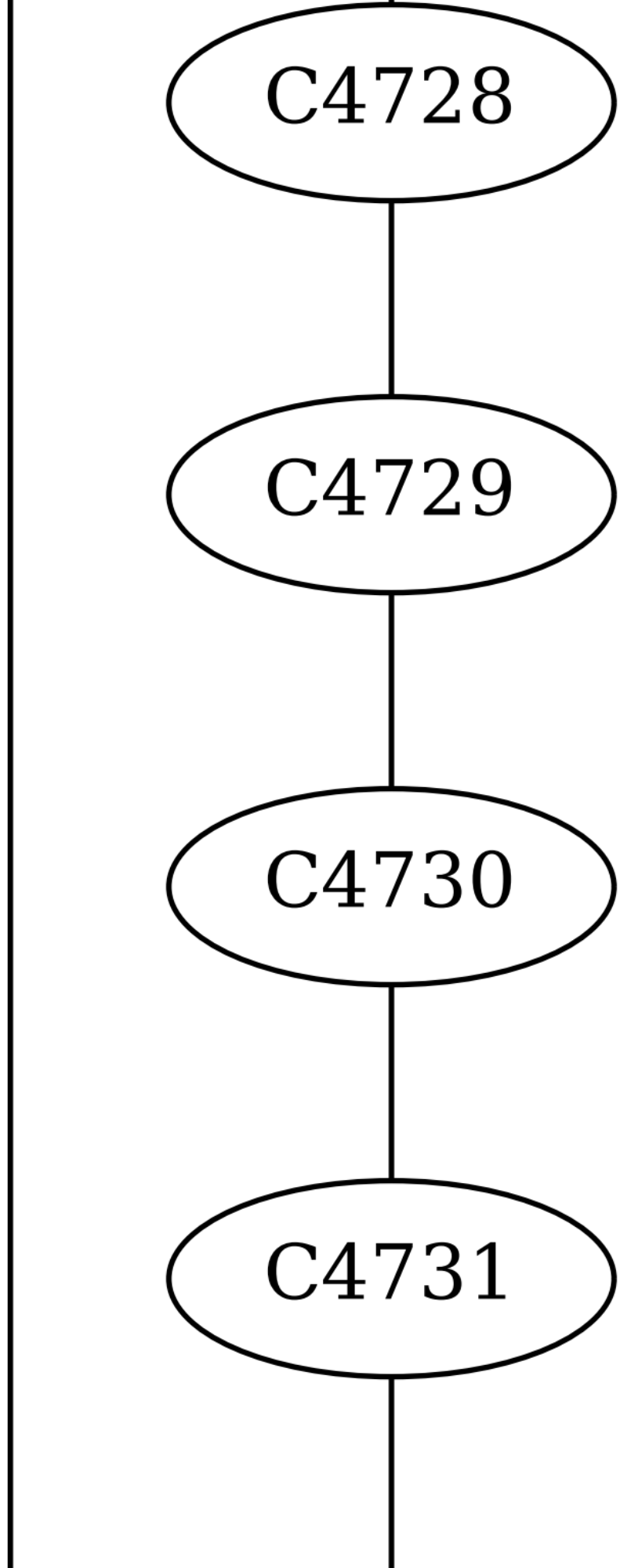
C4728
C4729
C4730
C4731

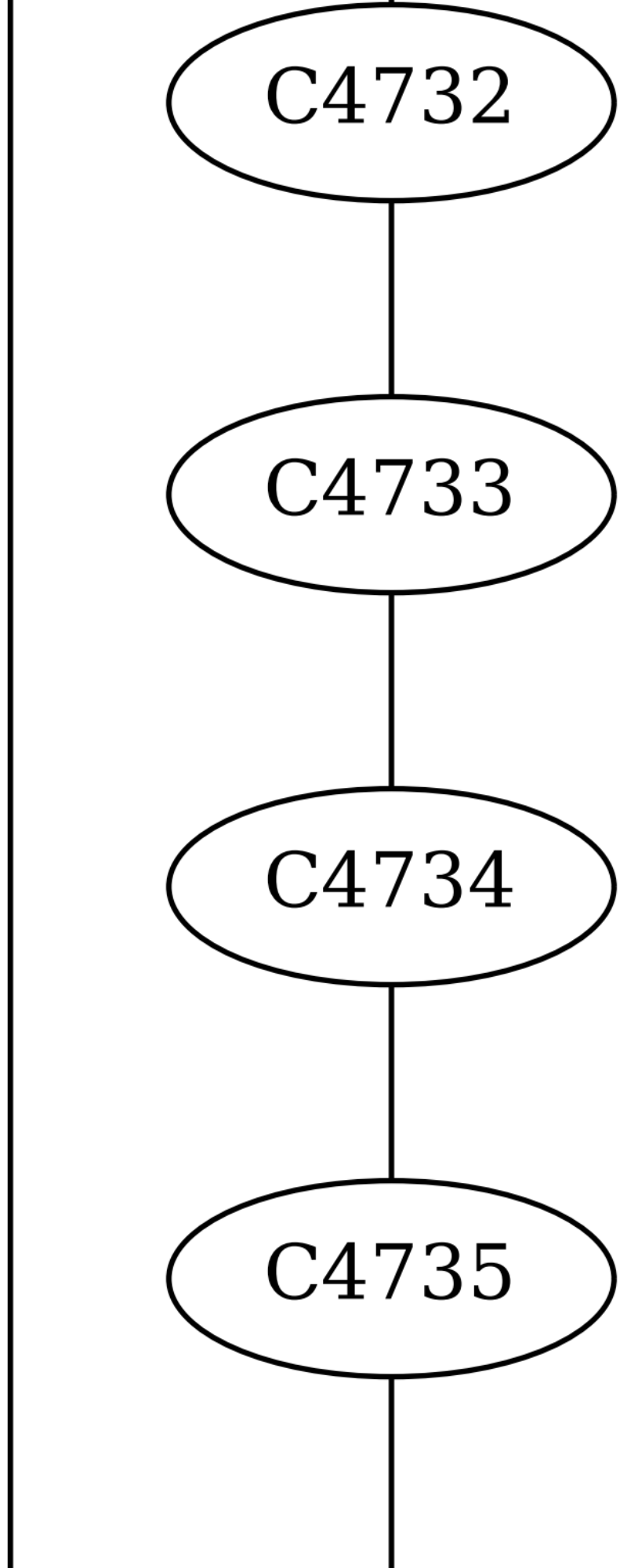
C4732
C4733
C4734
C4735

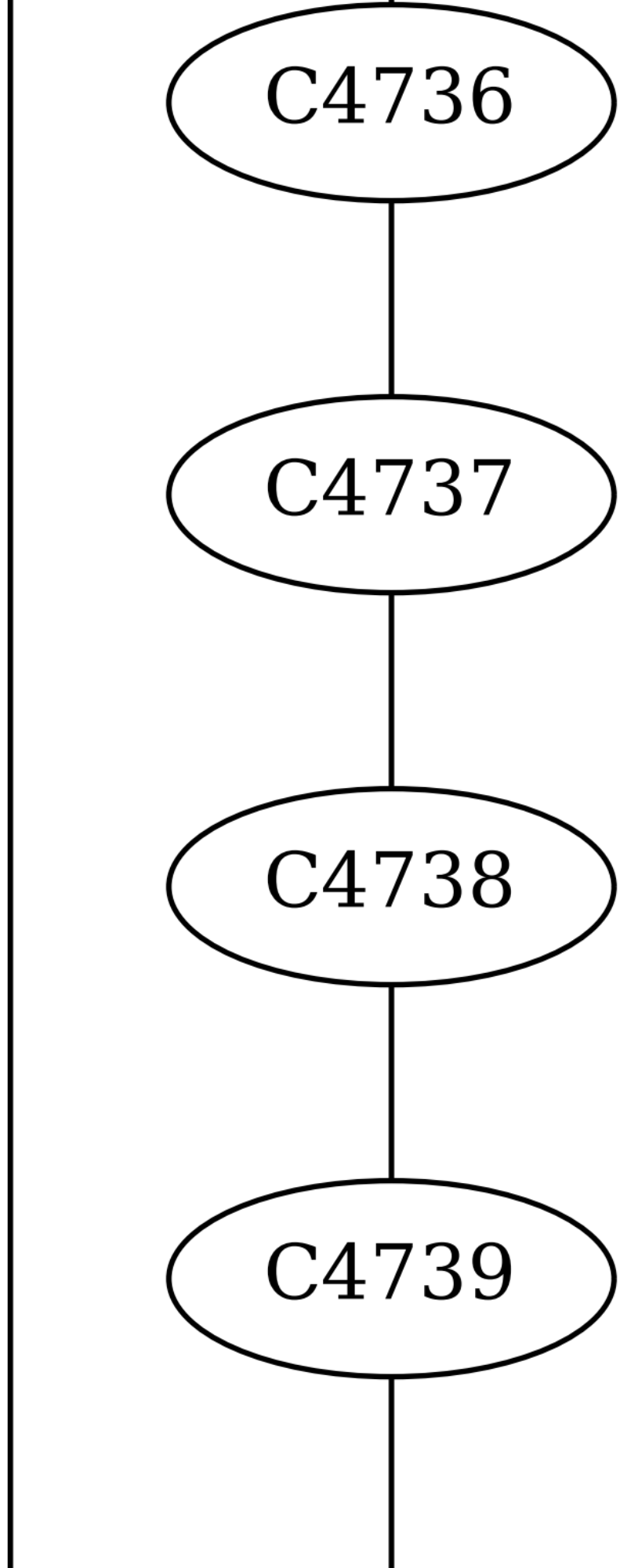
C4736
C4737
C4738
C4739

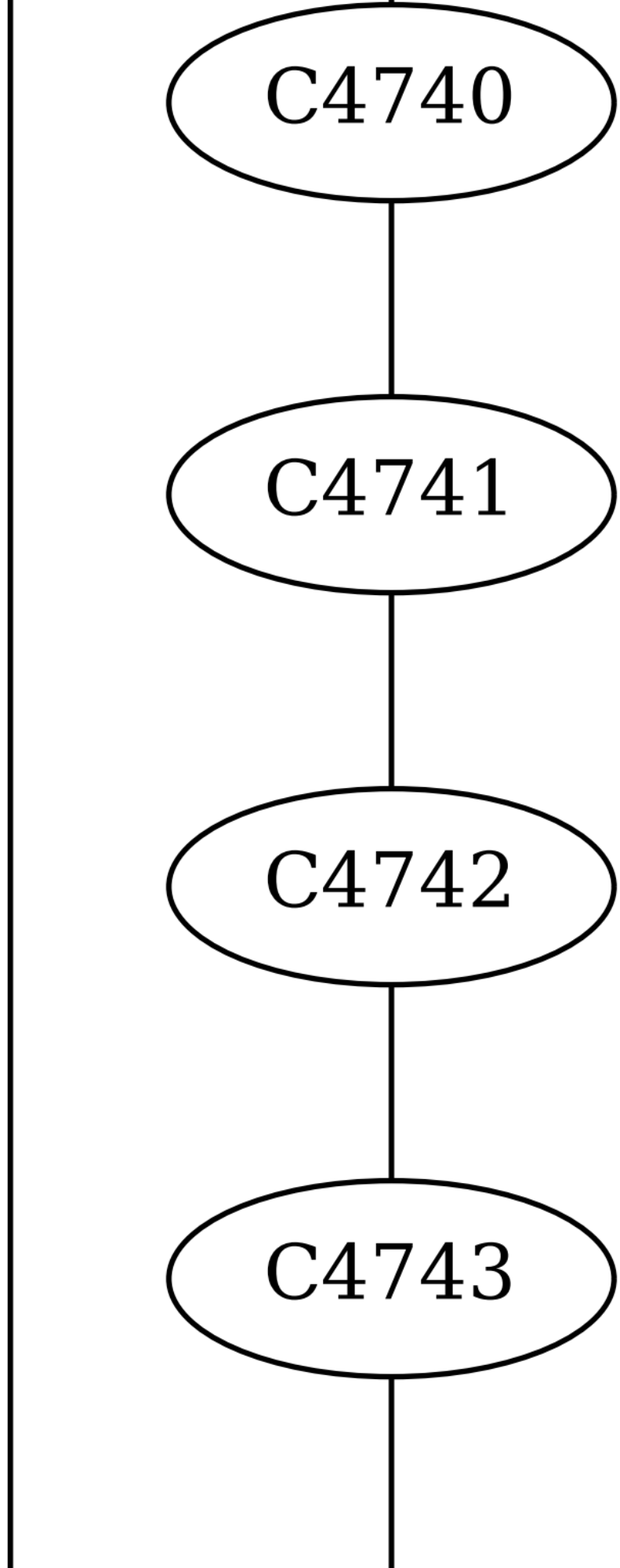
C4740
C4741
C4742
C4743

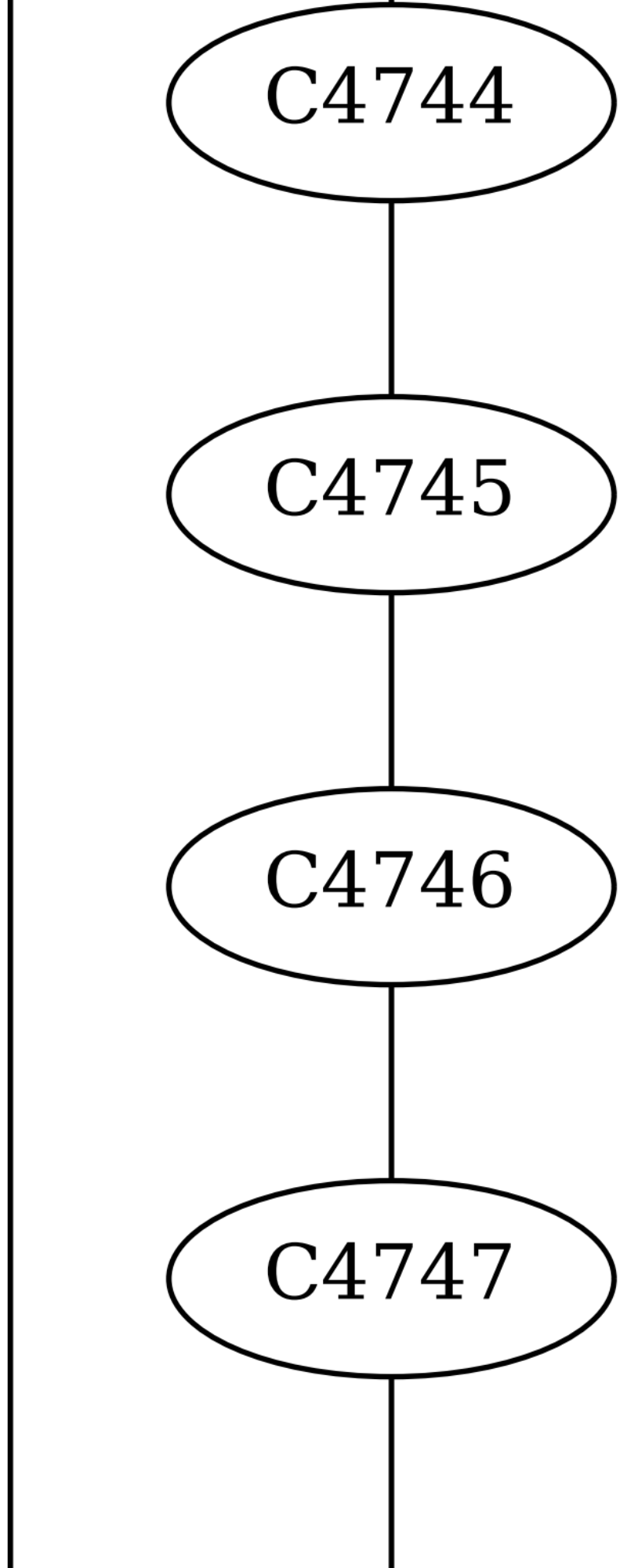
C4744
C4745
C4746
C4747

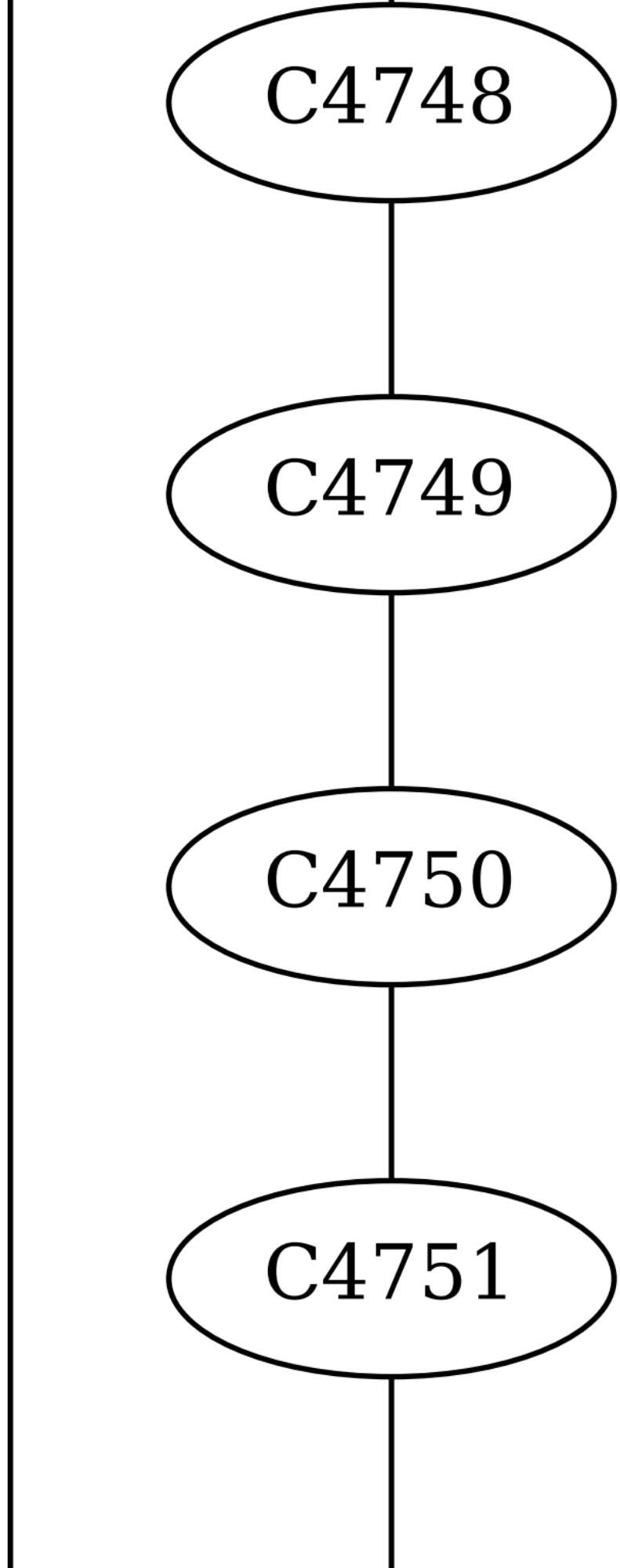
C4748
C4749
C4750
C4751

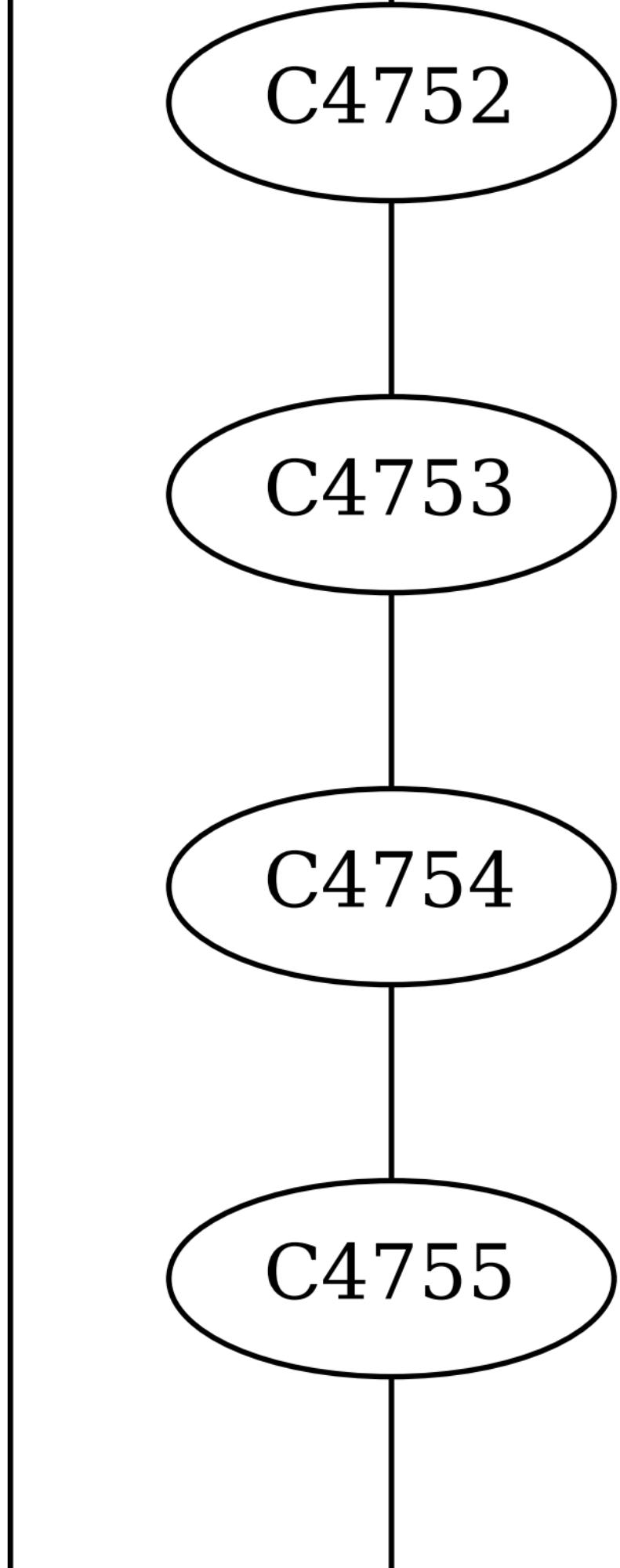
C4752
C4753
C4754
C4755

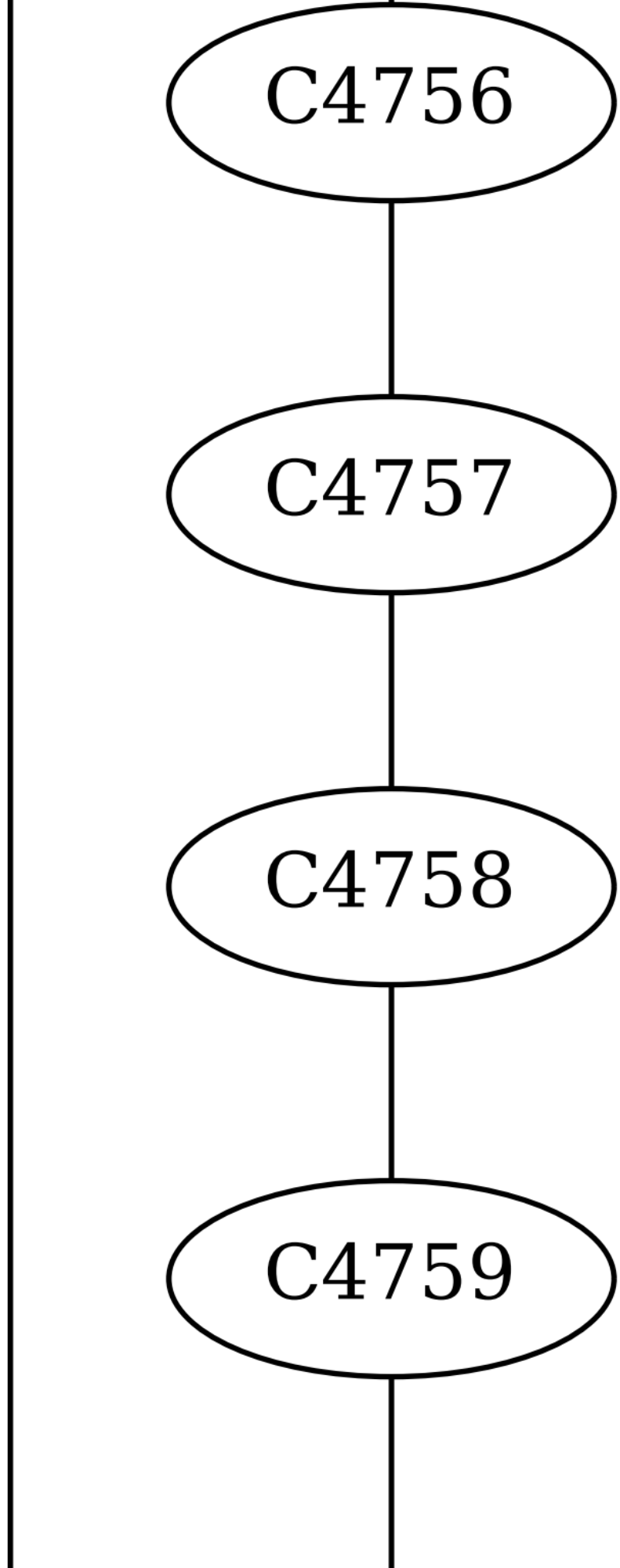
C4756
C4757
C4758
C4759

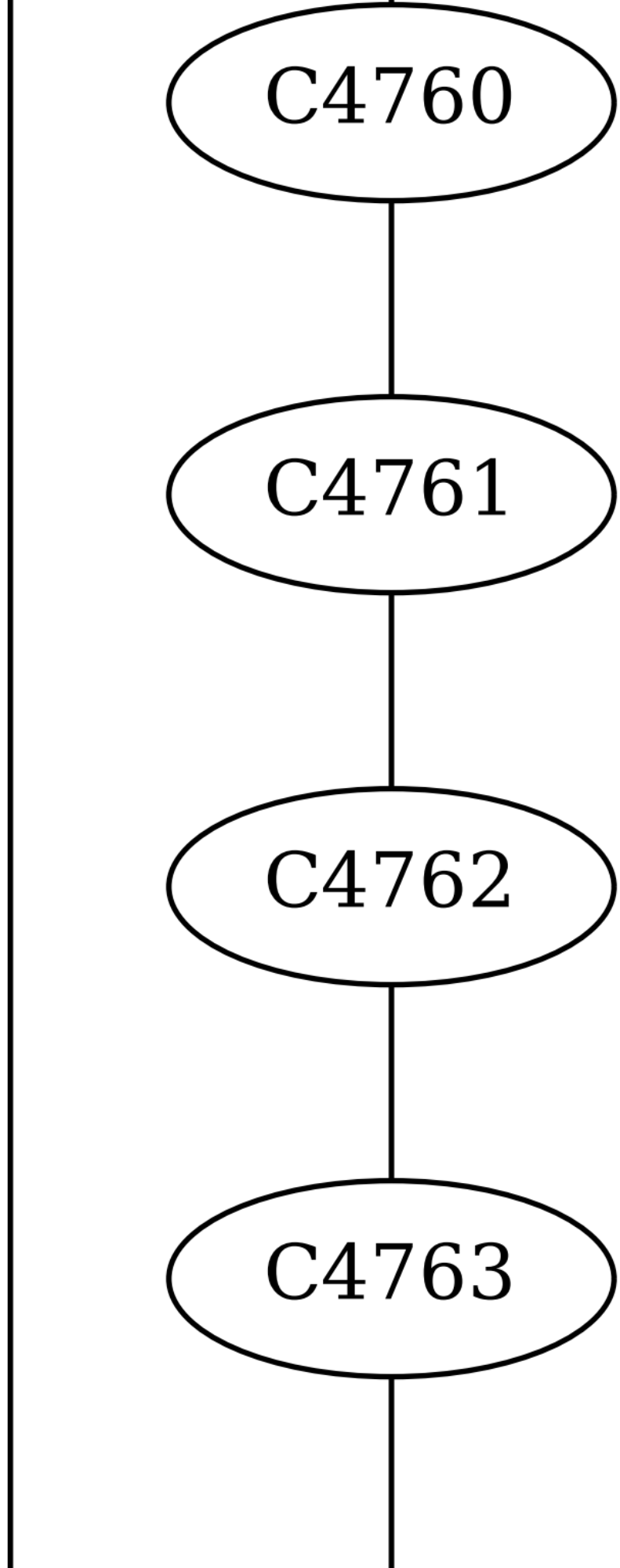
C4760
C4761
C4762
C4763

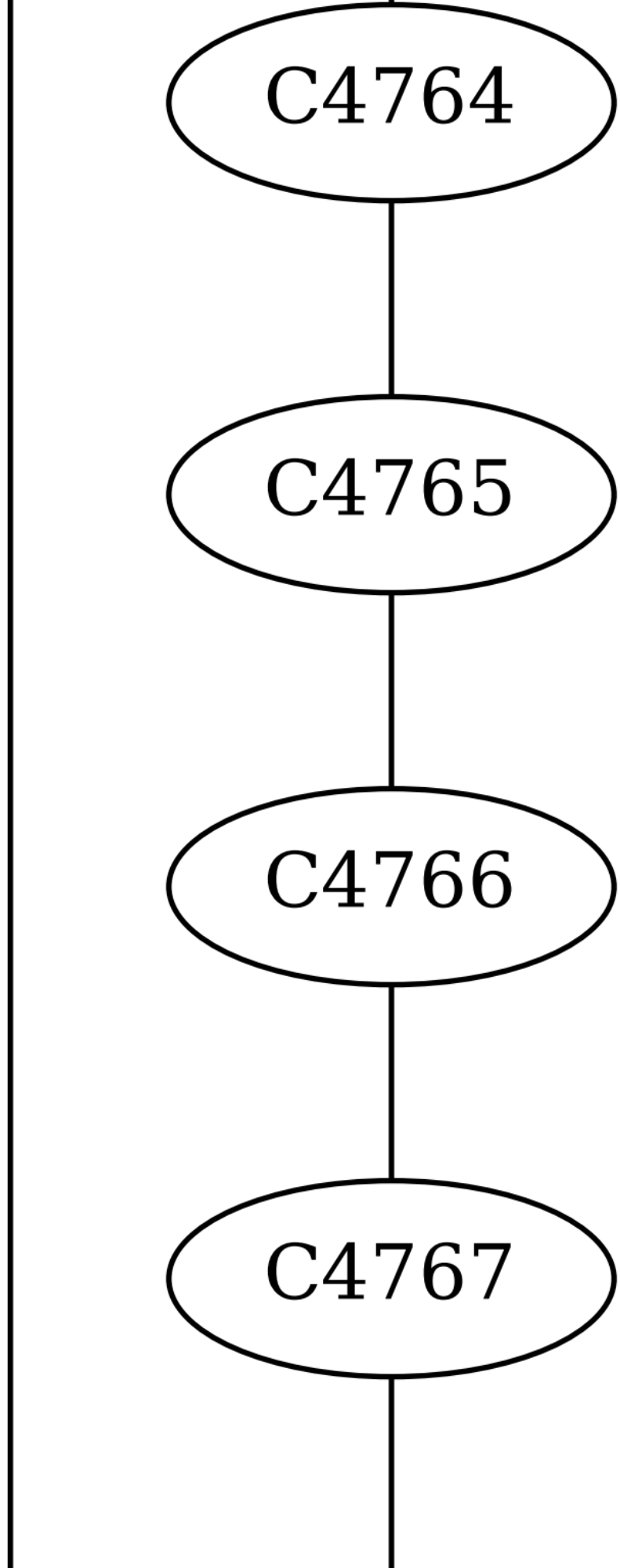
C4764
C4765
C4766
C4767

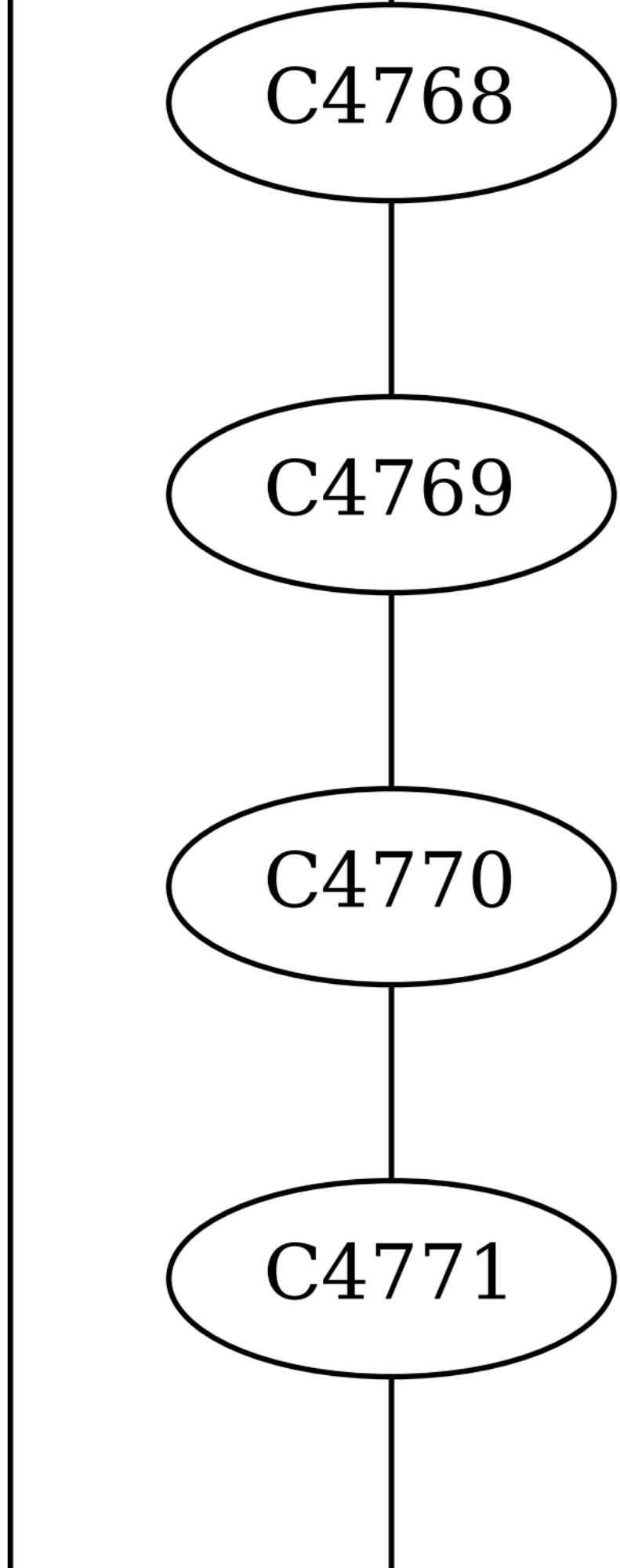
C4768
C4769
C4770
C4771

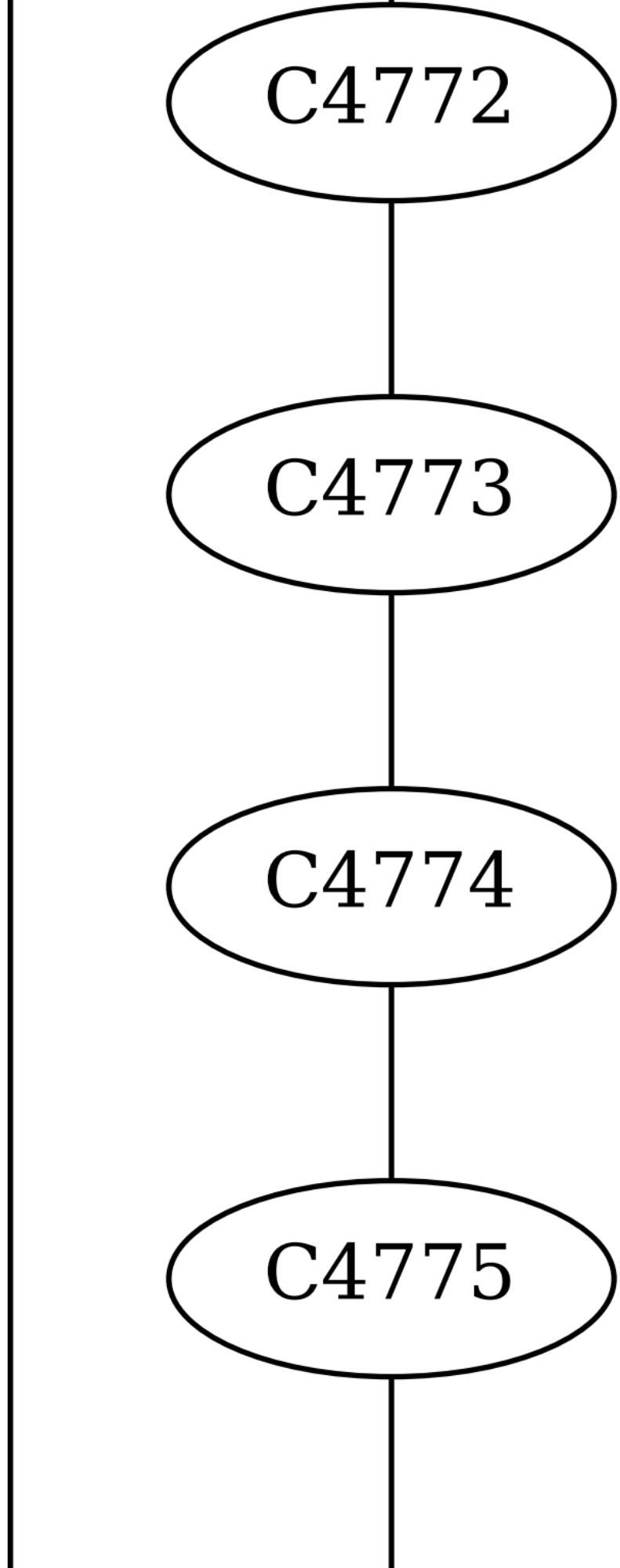
C4772
C4773
C4774
C4775

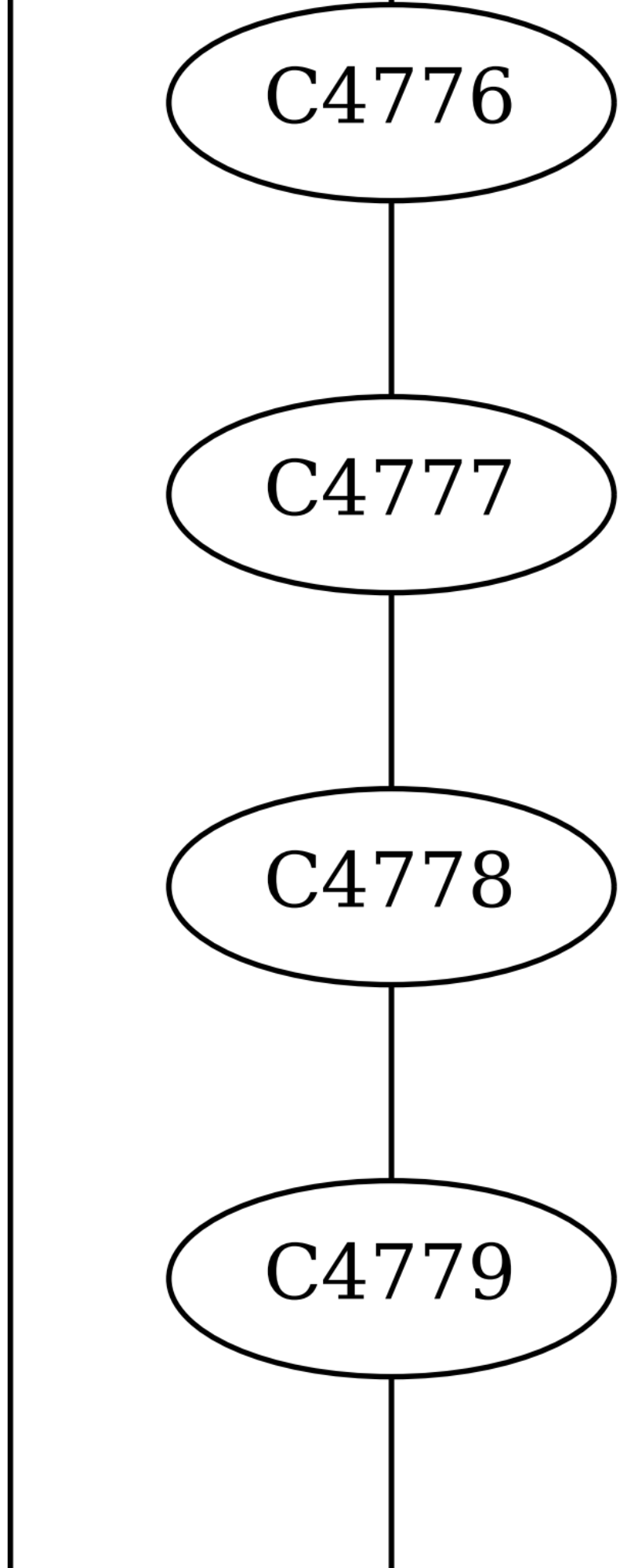
C4776
C4777
C4778
C4779

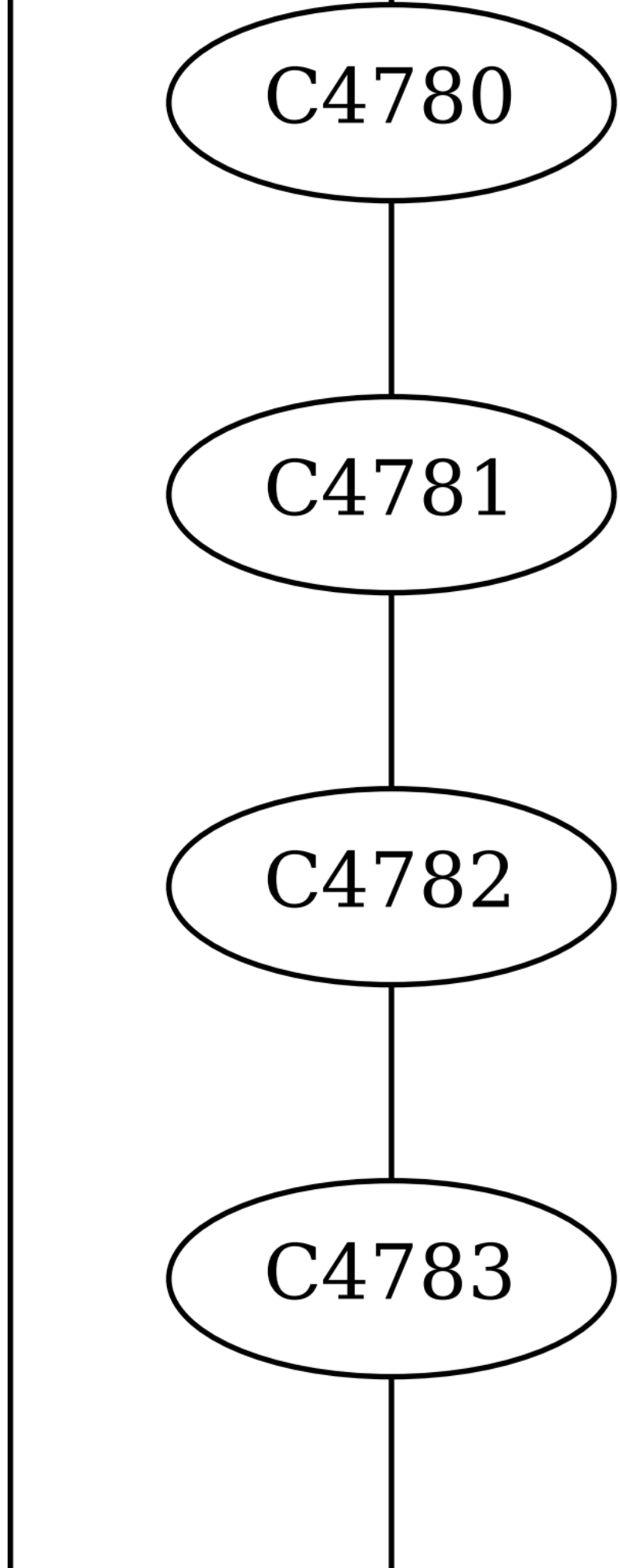
C4780
C4781
C4782
C4783

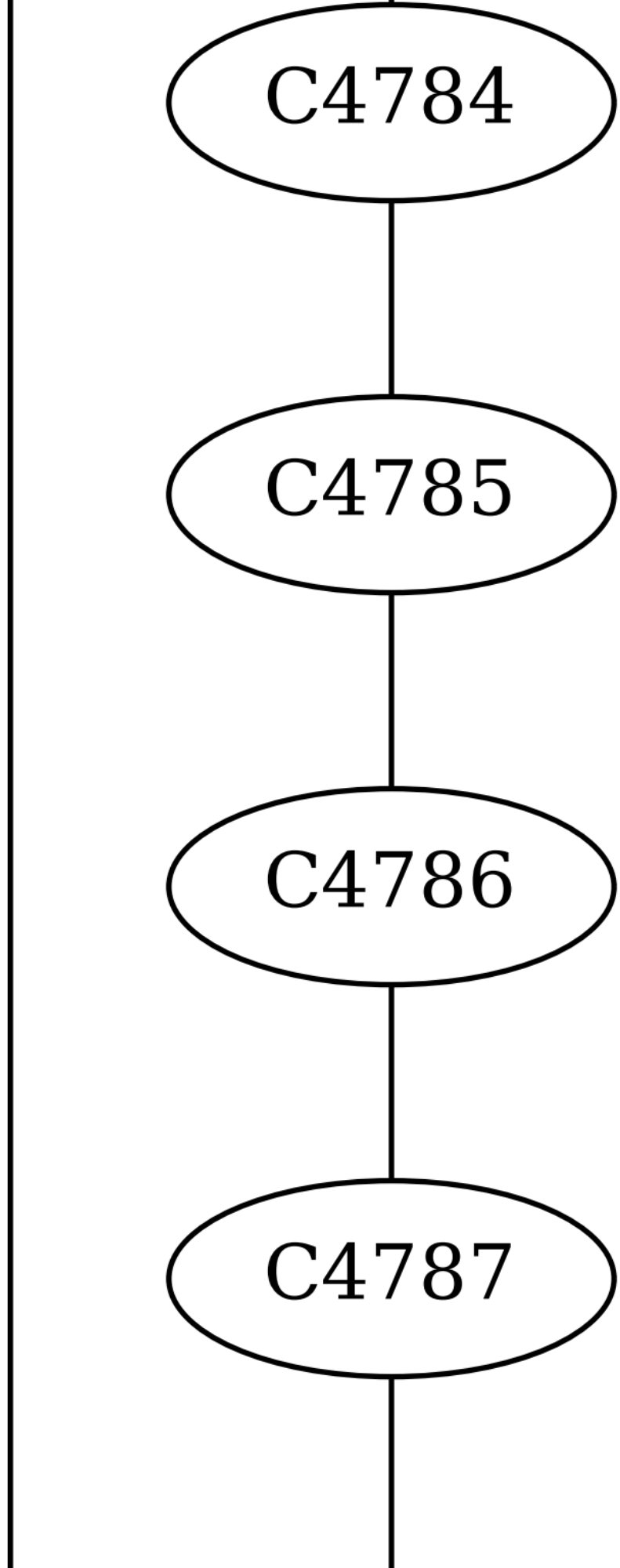
C4784
C4785
C4786
C4787

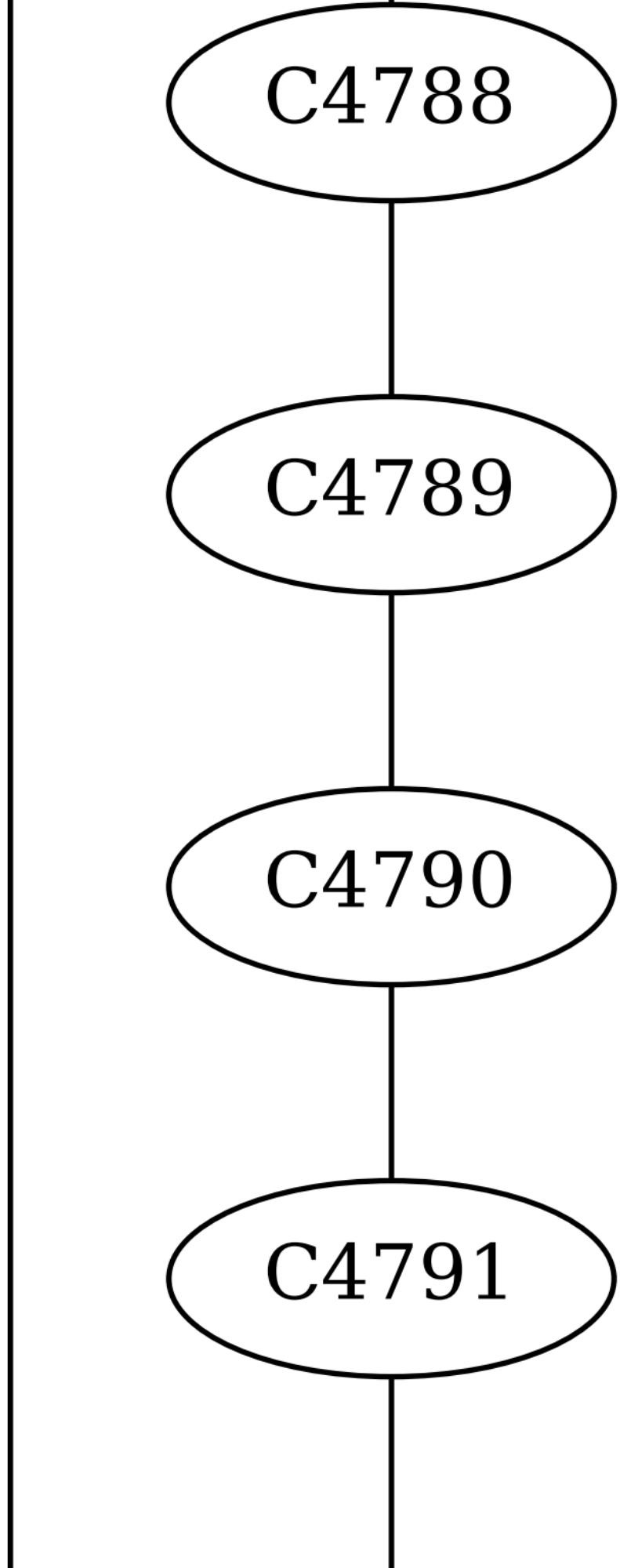
C4788
C4789
C4790
C4791

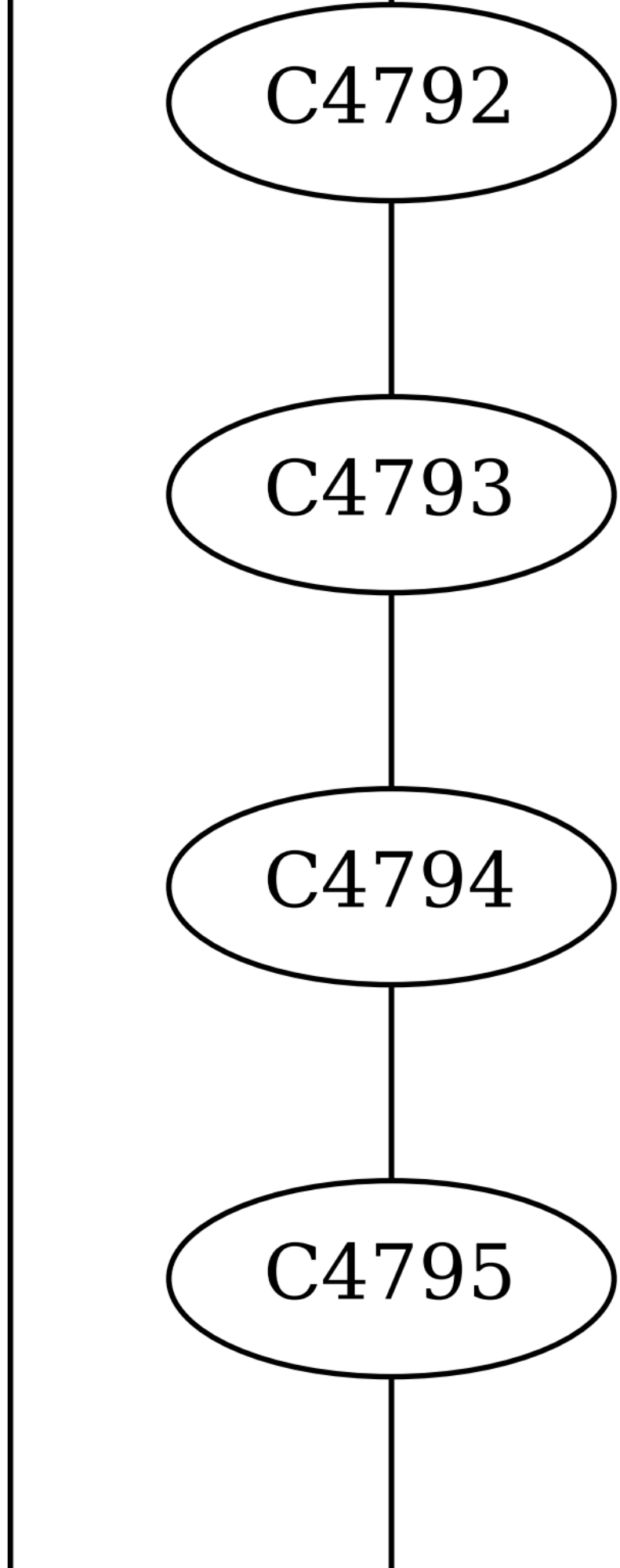
C4792
C4793
C4794
C4795

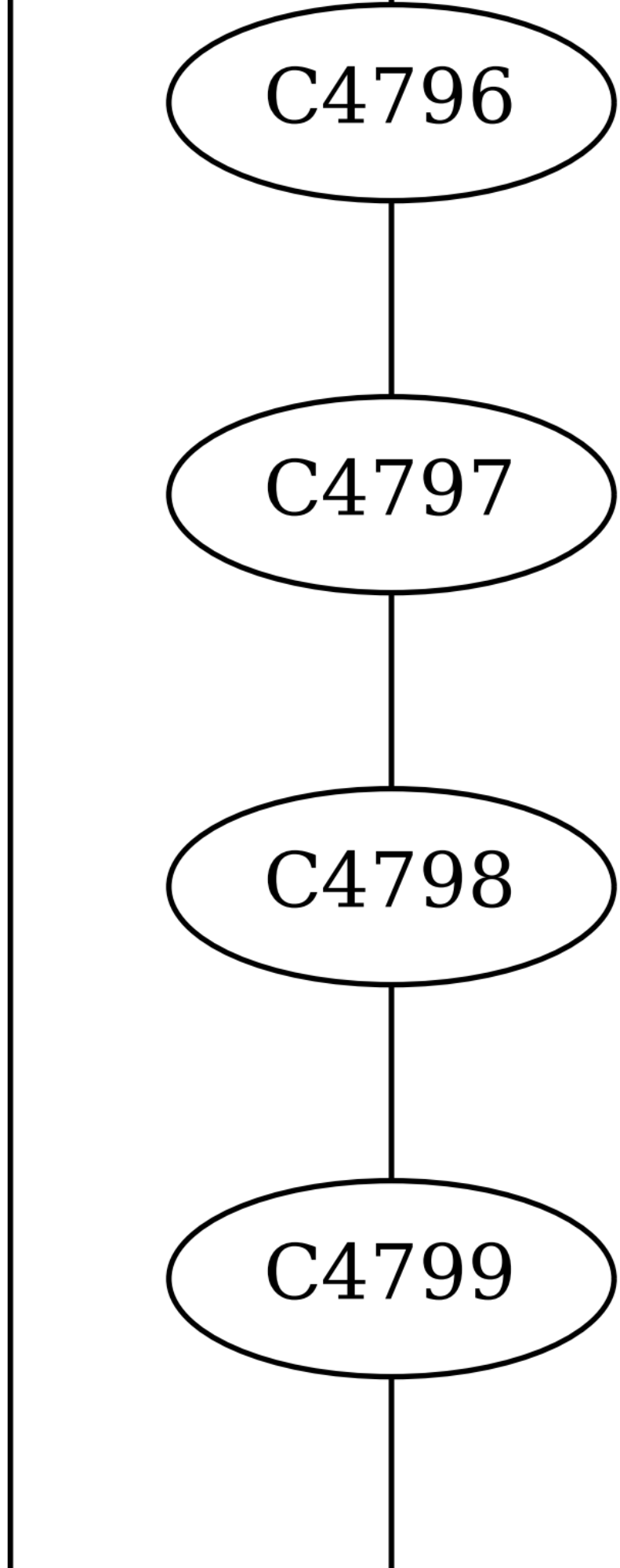
C4796
C4797
C4798
C4799

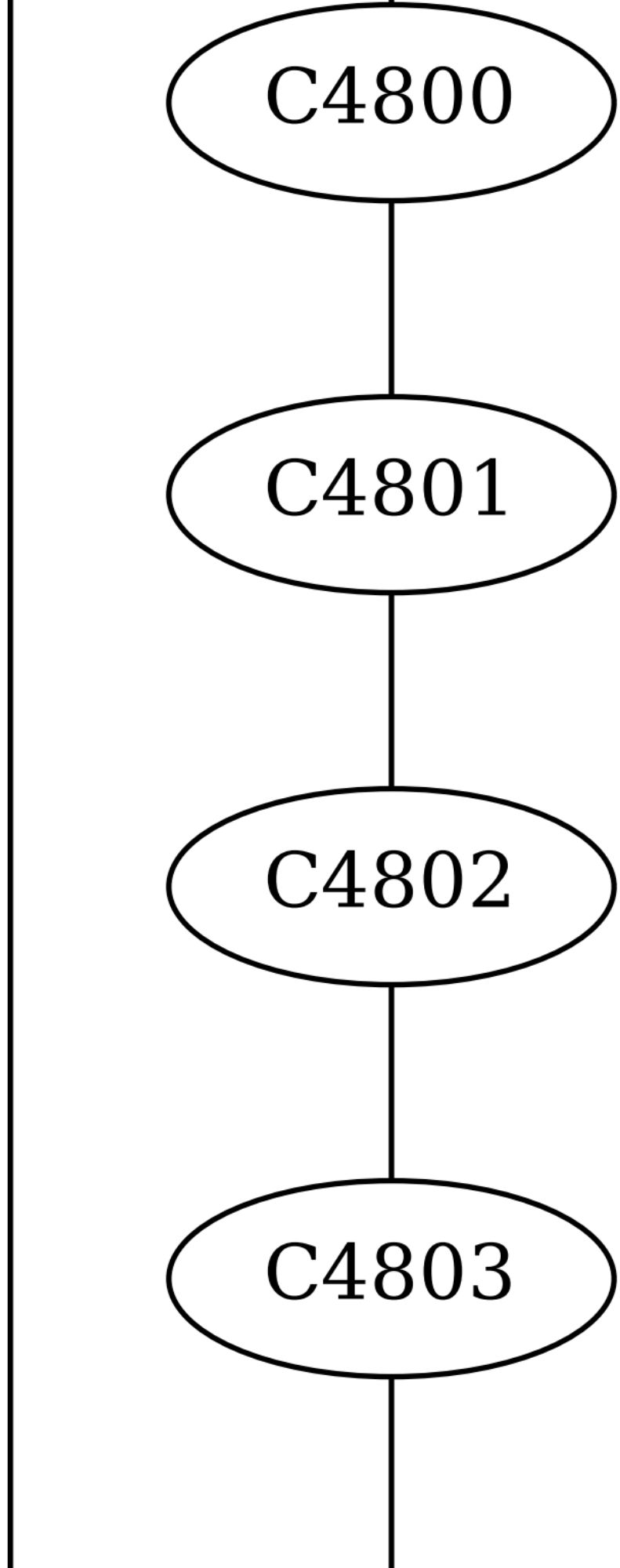
C4800
C4801
C4802
C4803

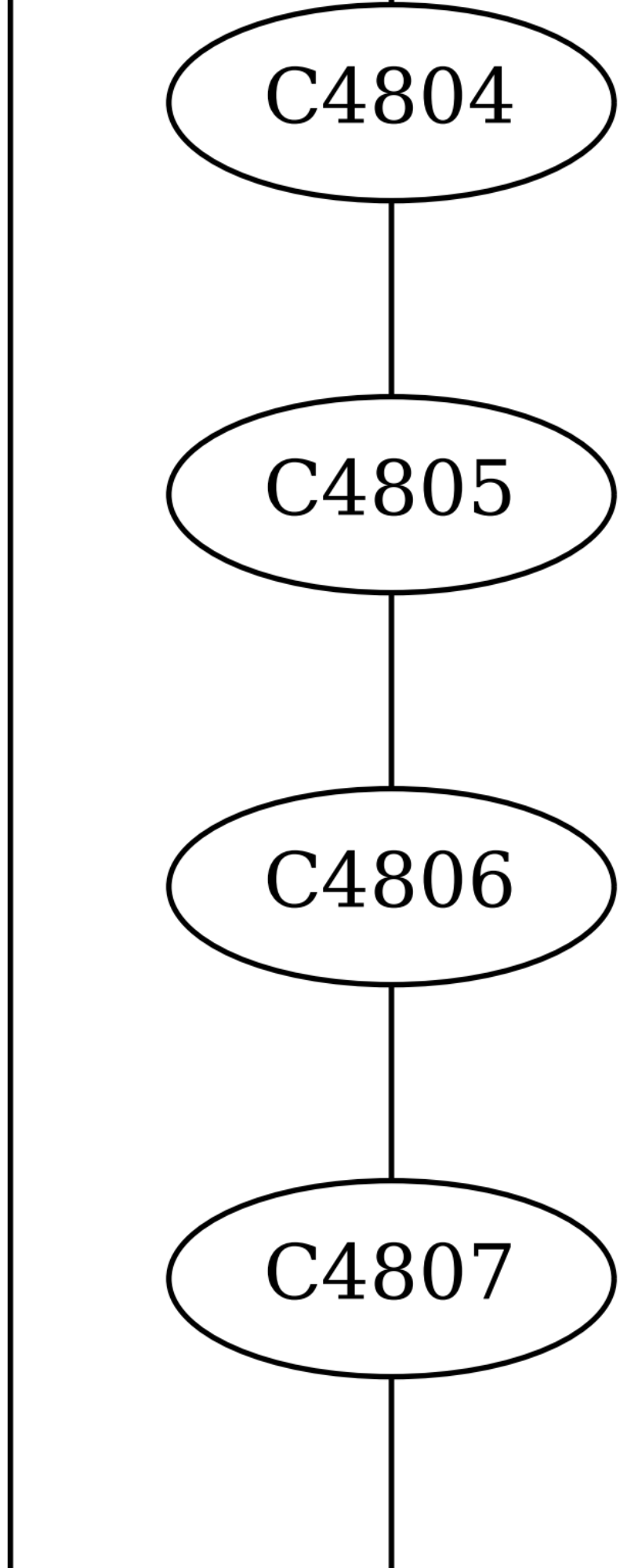
C4804
C4805
C4806
C4807

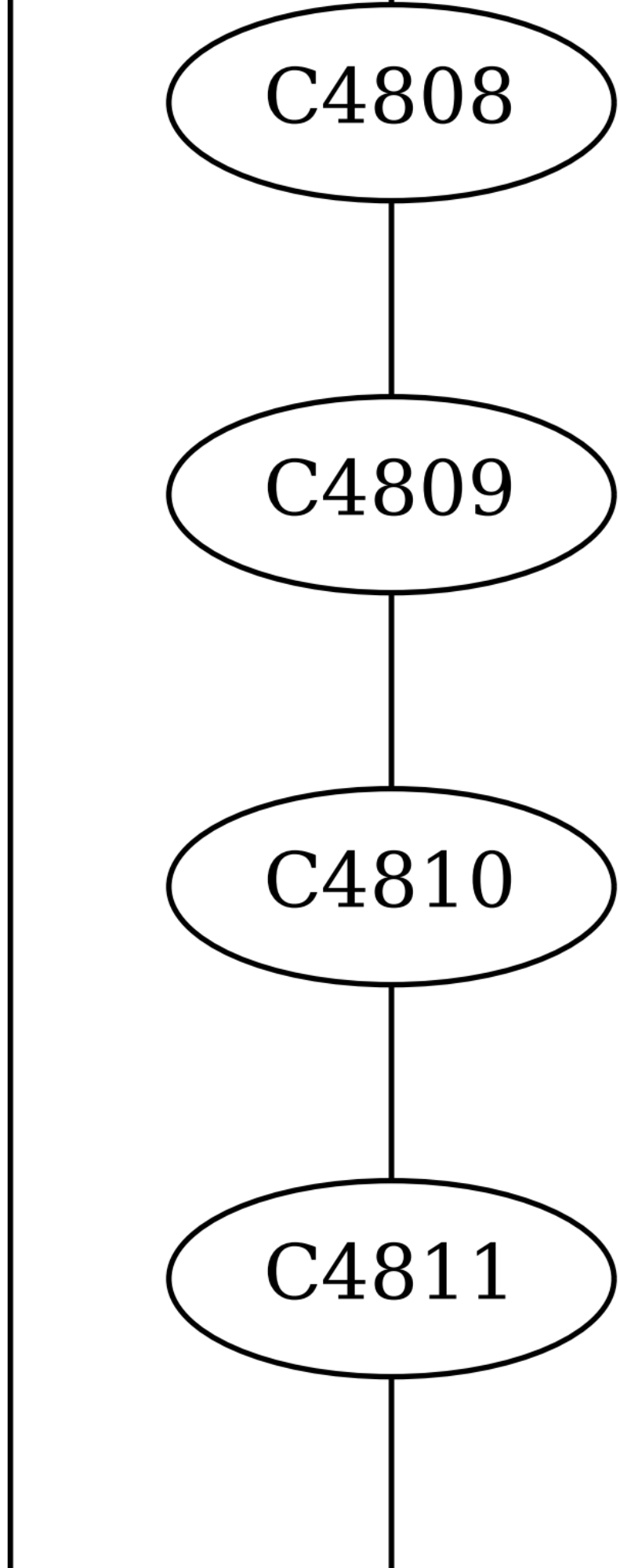
C4808
C4809
C4810
C4811

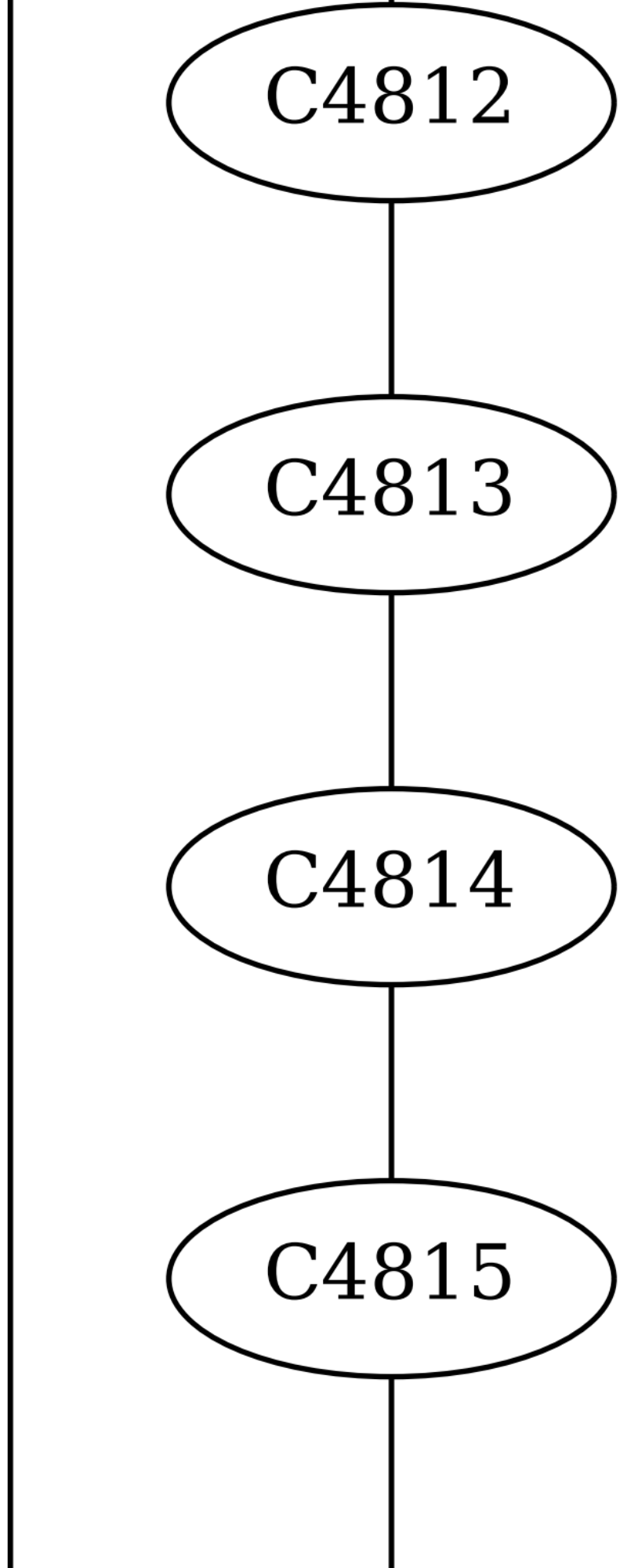
C4812
C4813
C4814
C4815

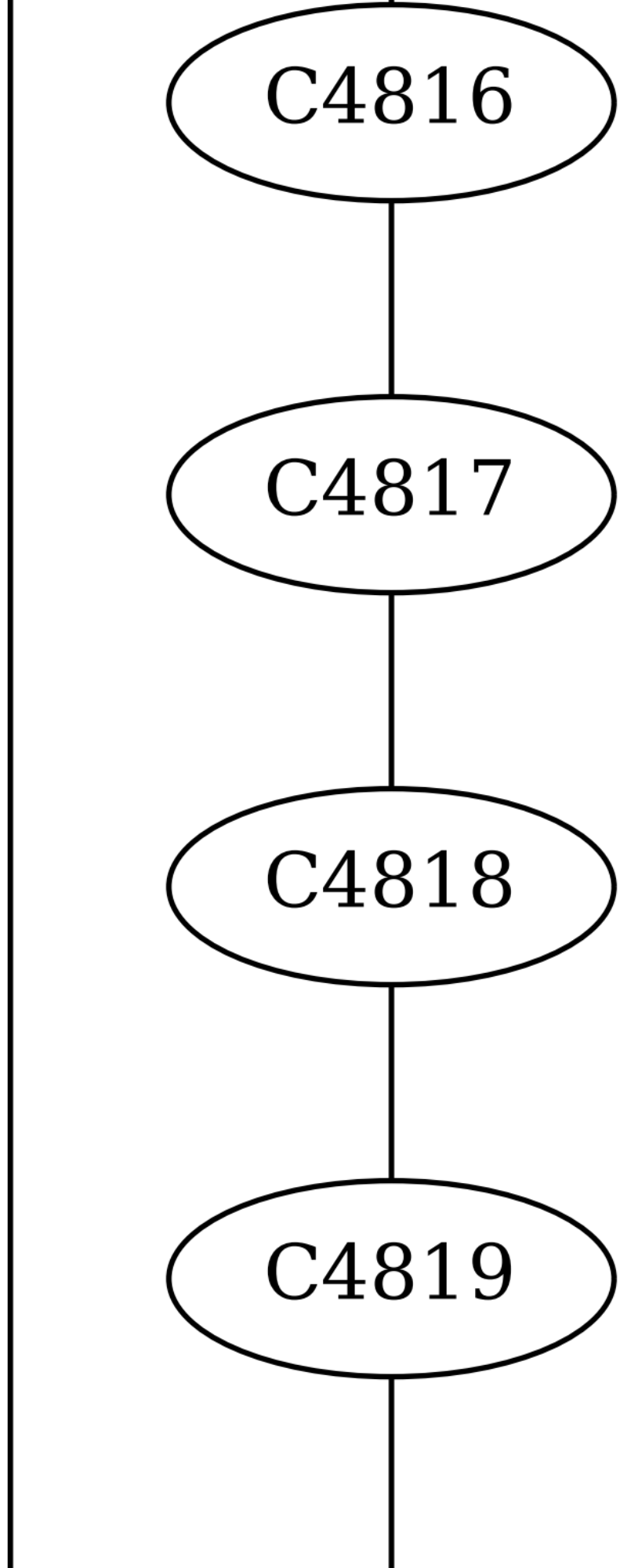
C4816
C4817
C4818
C4819

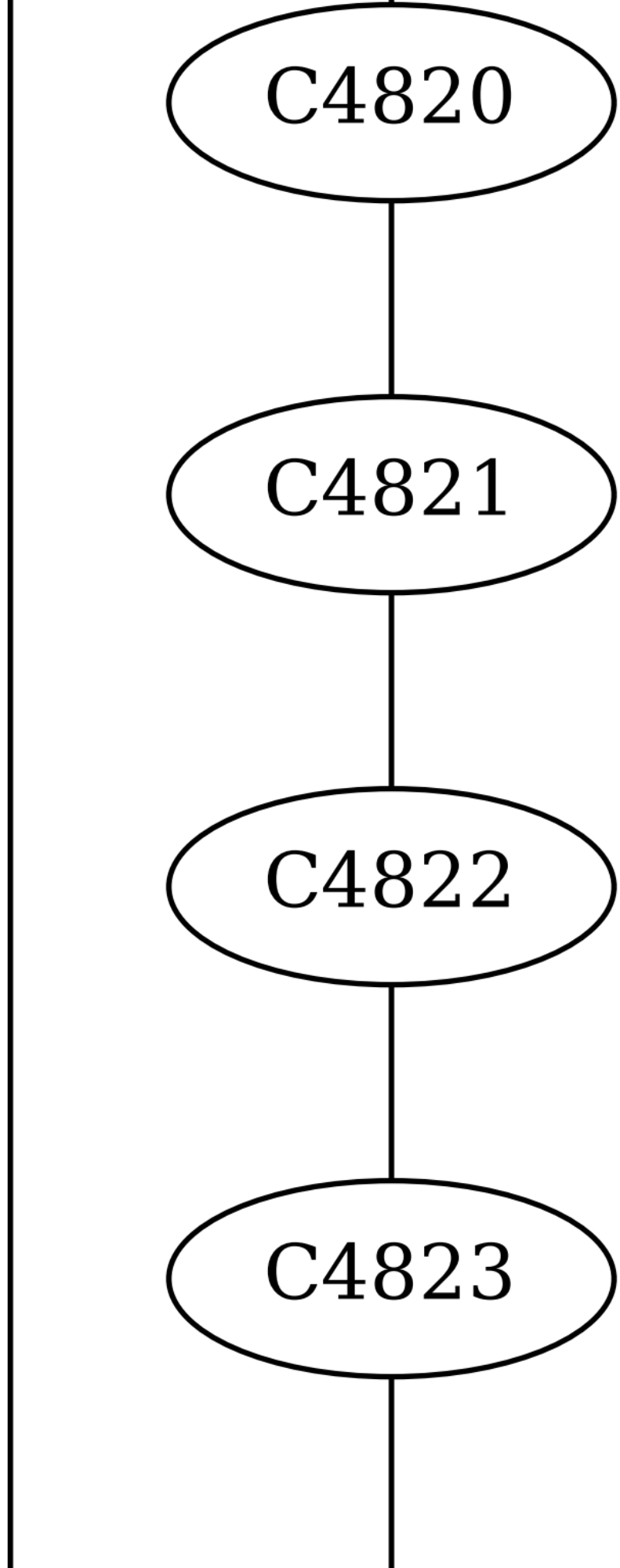
C4820
C4821
C4822
C4823

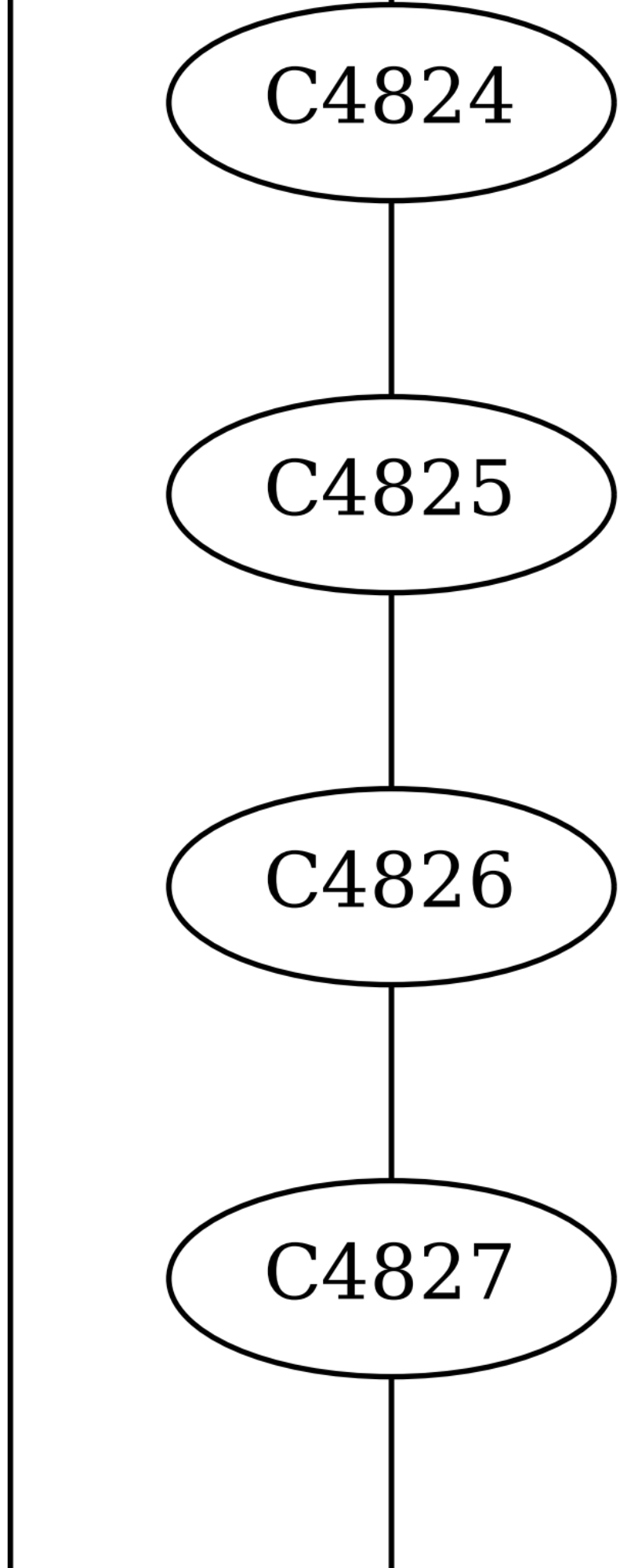
C4824
C4825
C4826
C4827

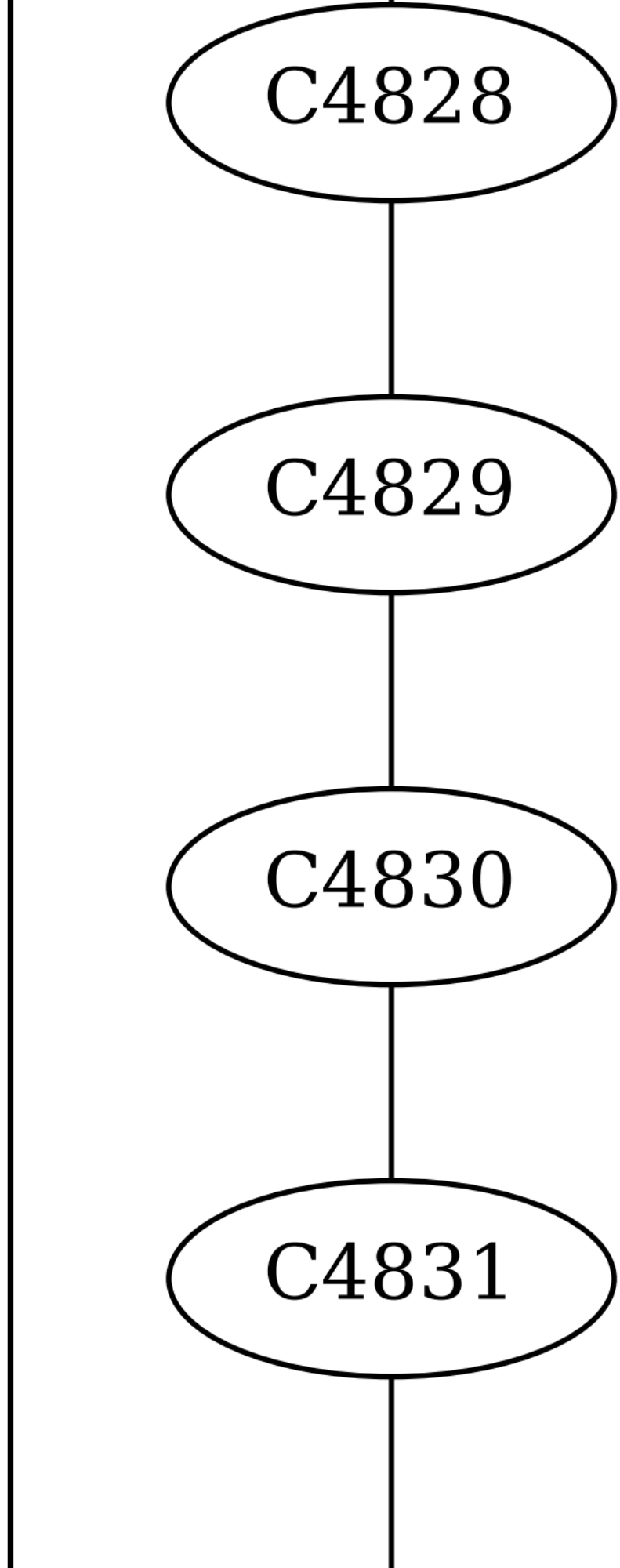
C4828
C4829
C4830
C4831

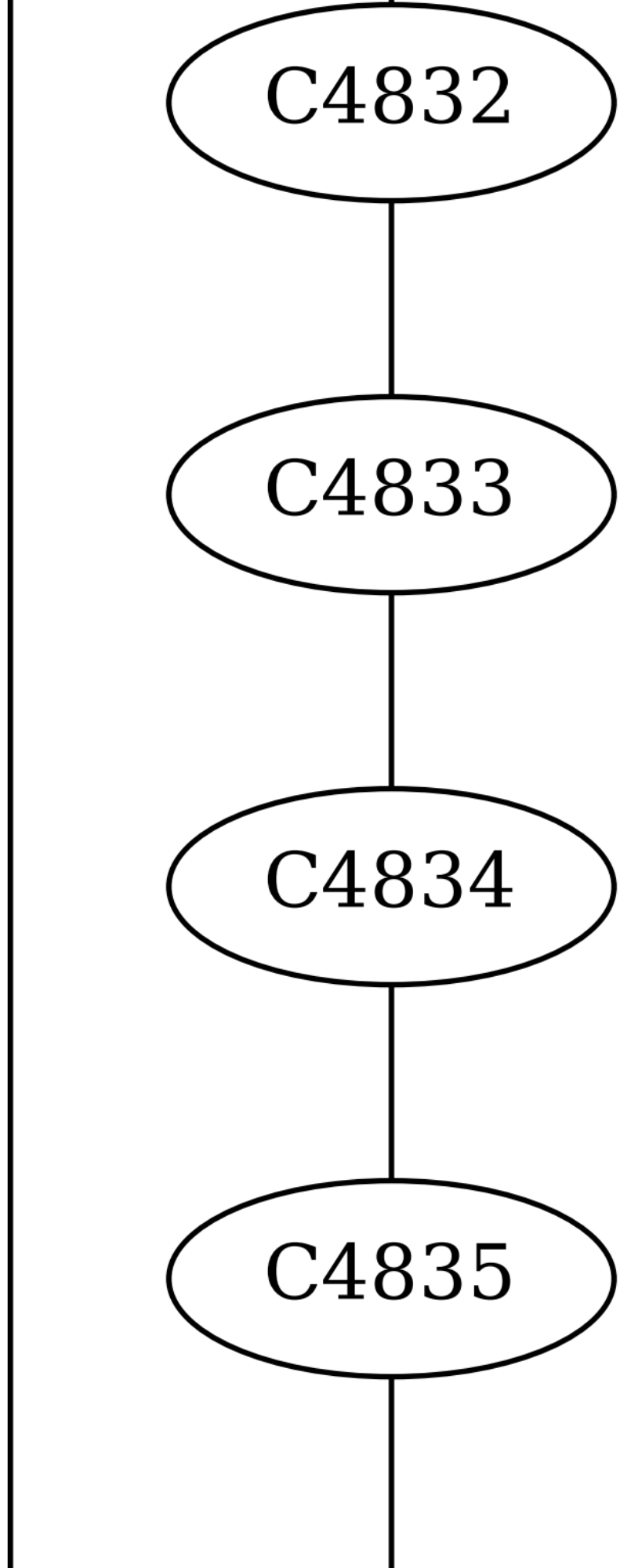
C4832
C4833
C4834
C4835

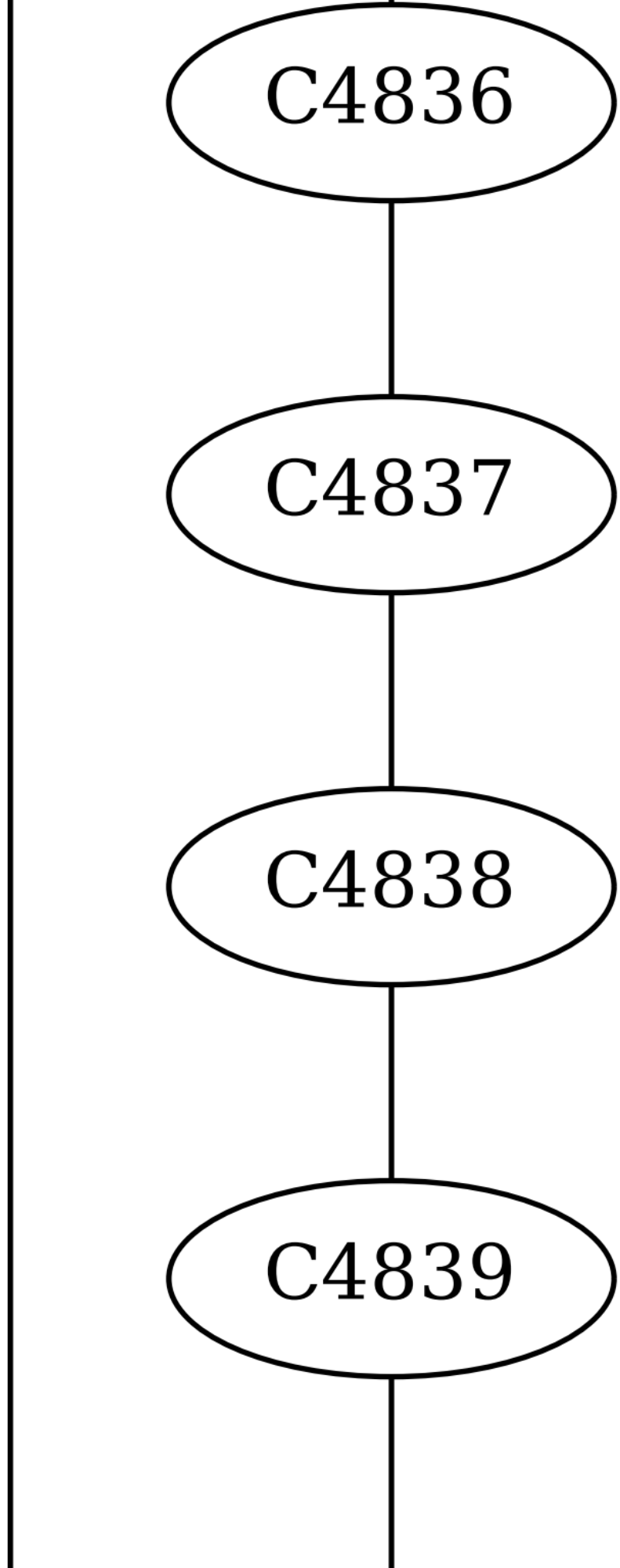
C4836
C4837
C4838
C4839

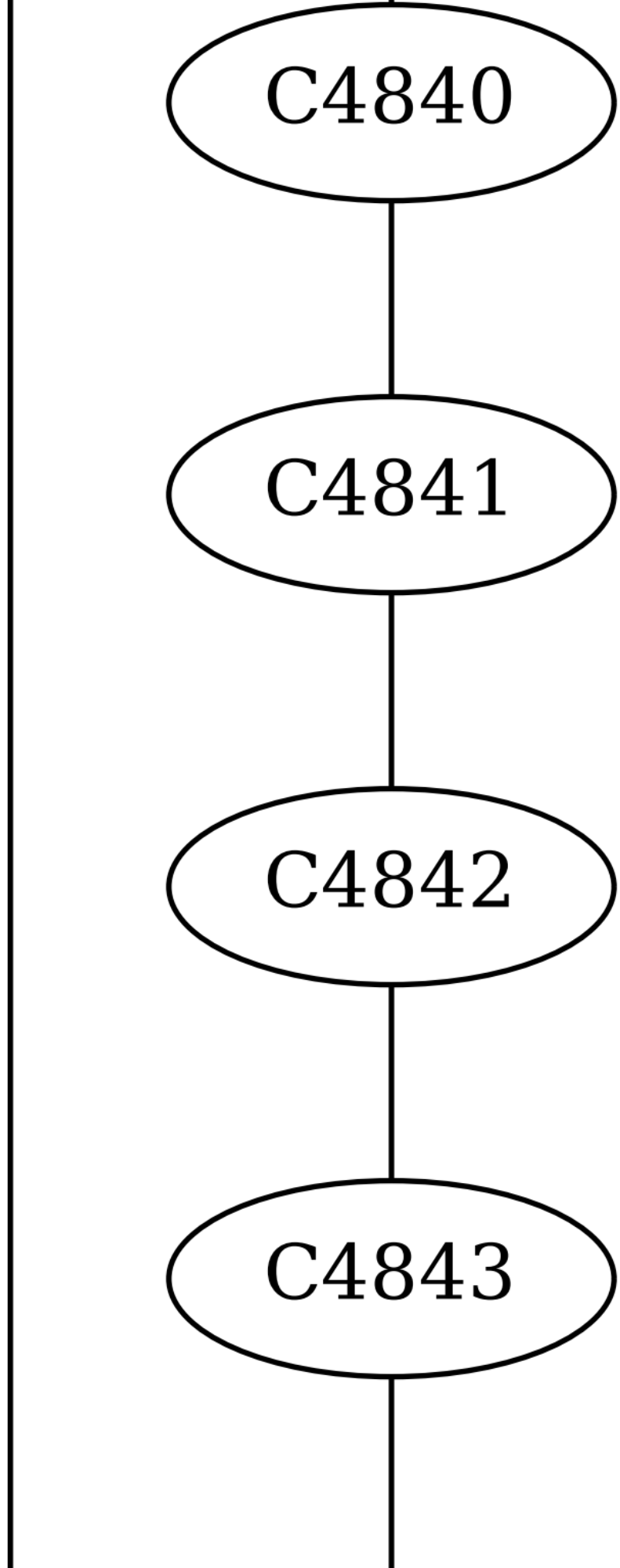
C4840
C4841
C4842
C4843

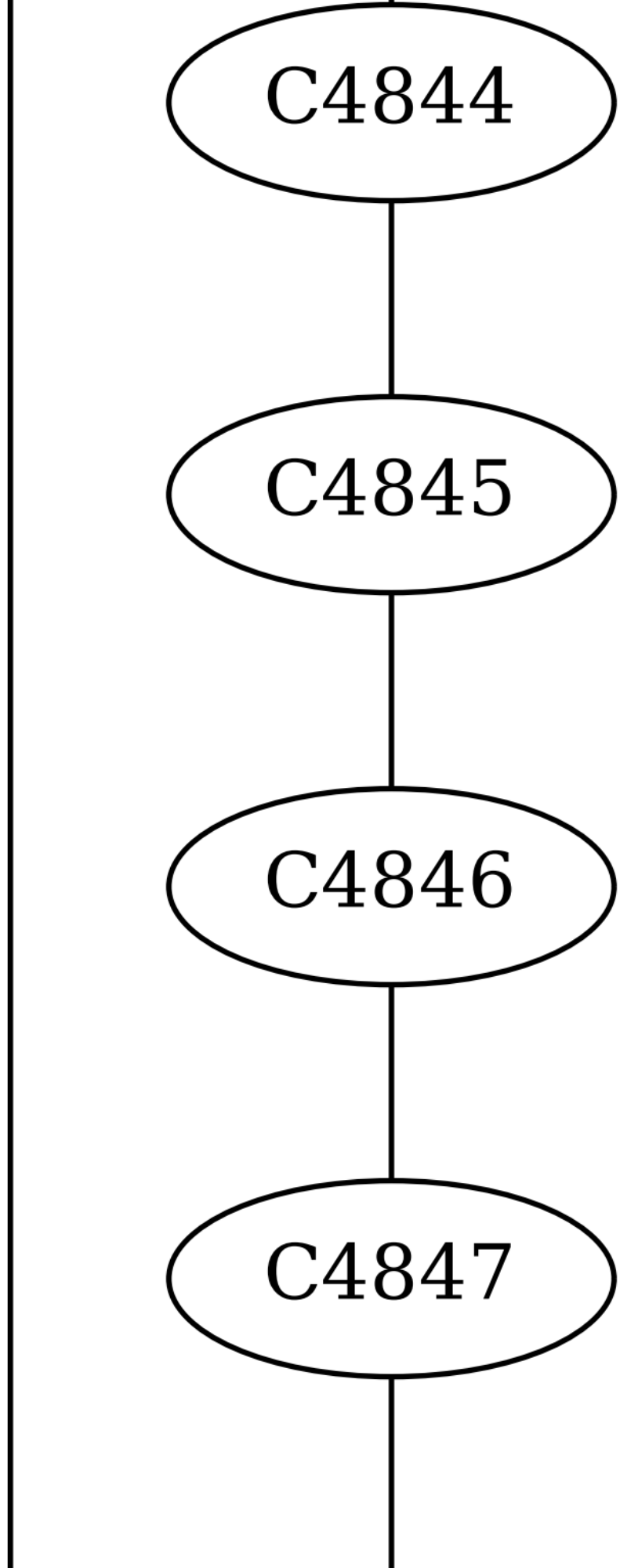
C4844
C4845
C4846
C4847

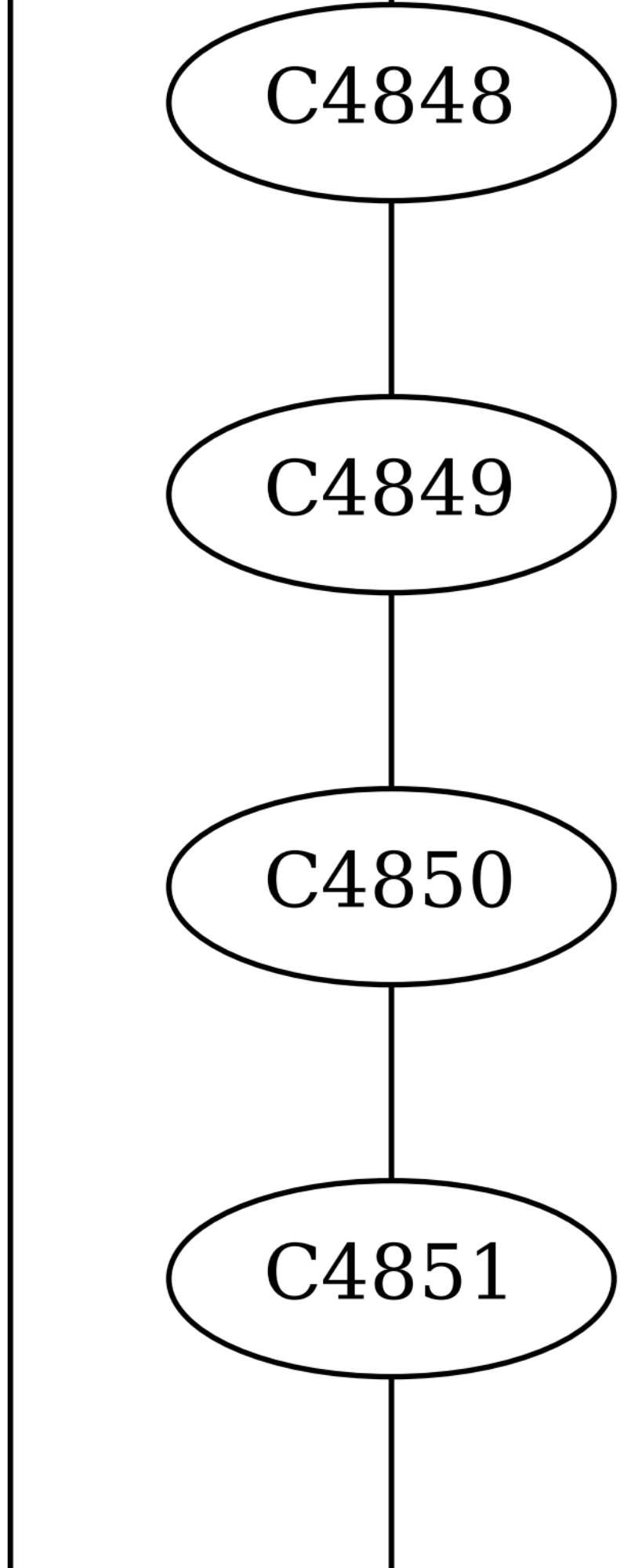
C4848
C4849
C4850
C4851

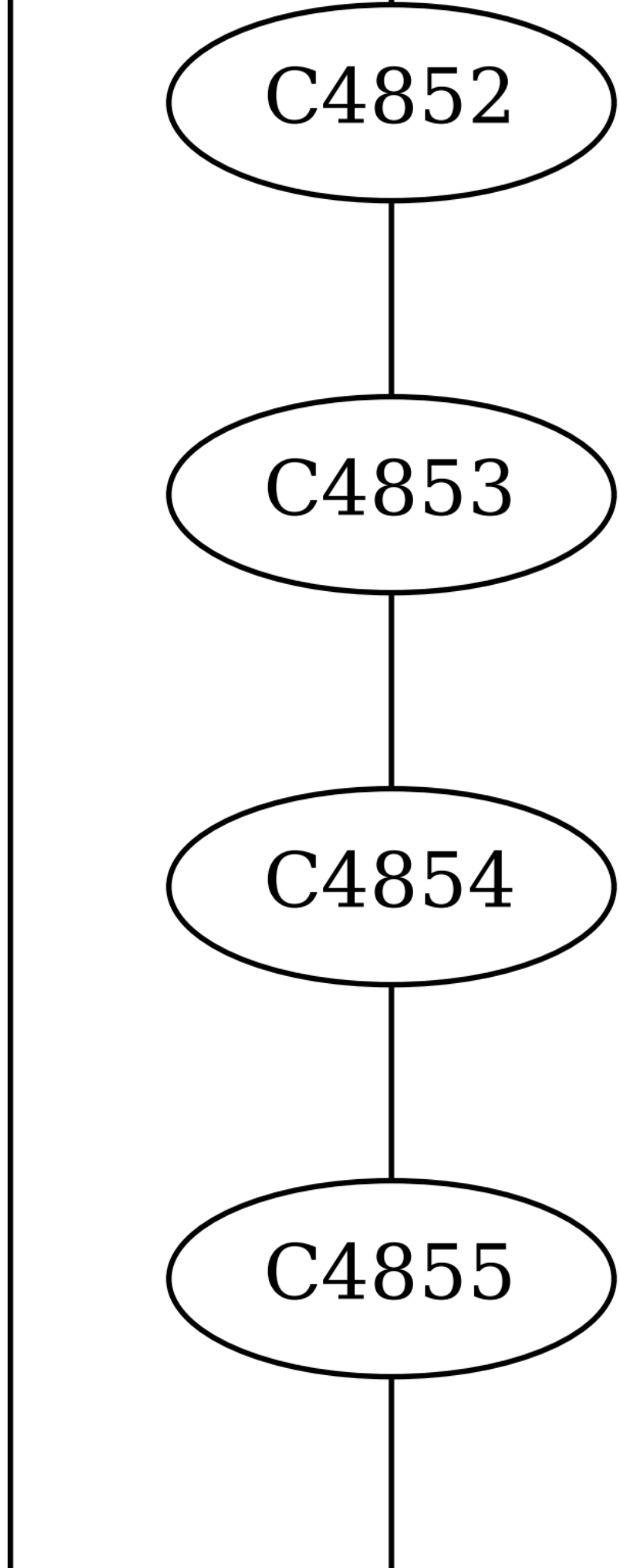
C4852
C4853
C4854
C4855

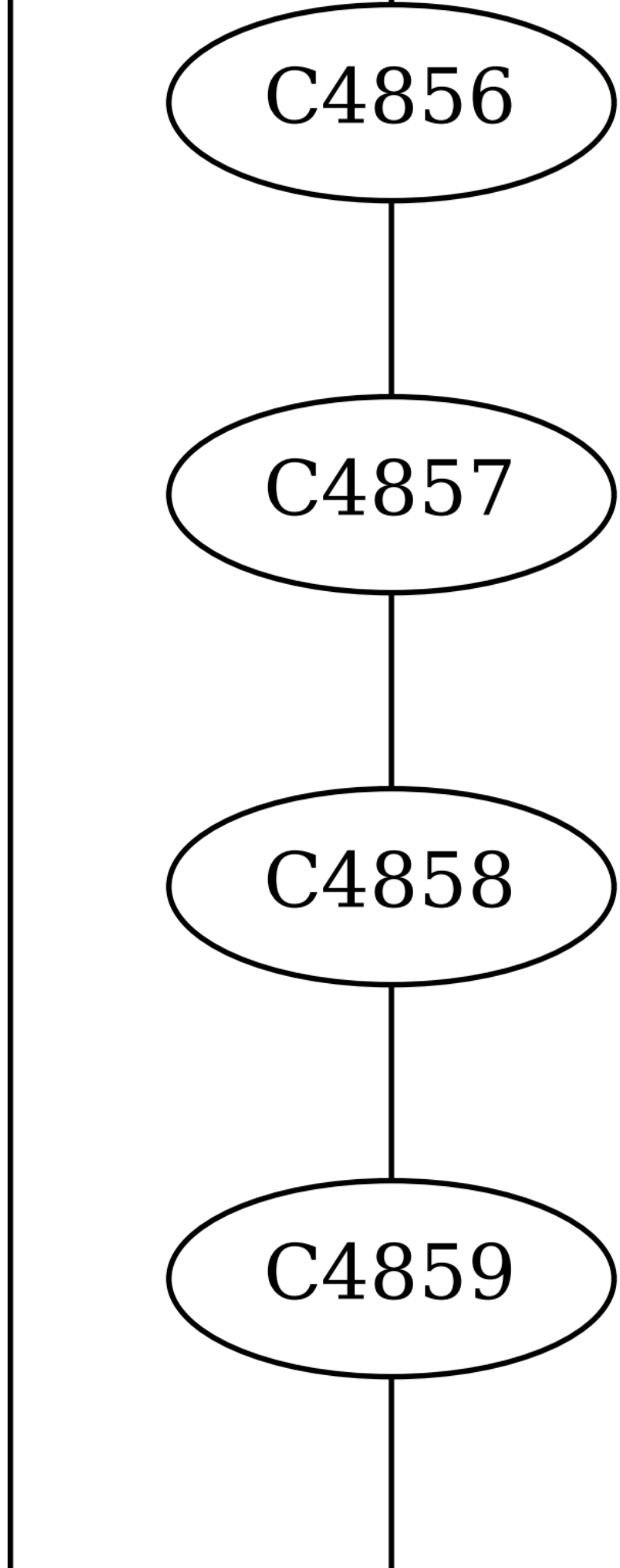
C4856
C4857
C4858
C4859

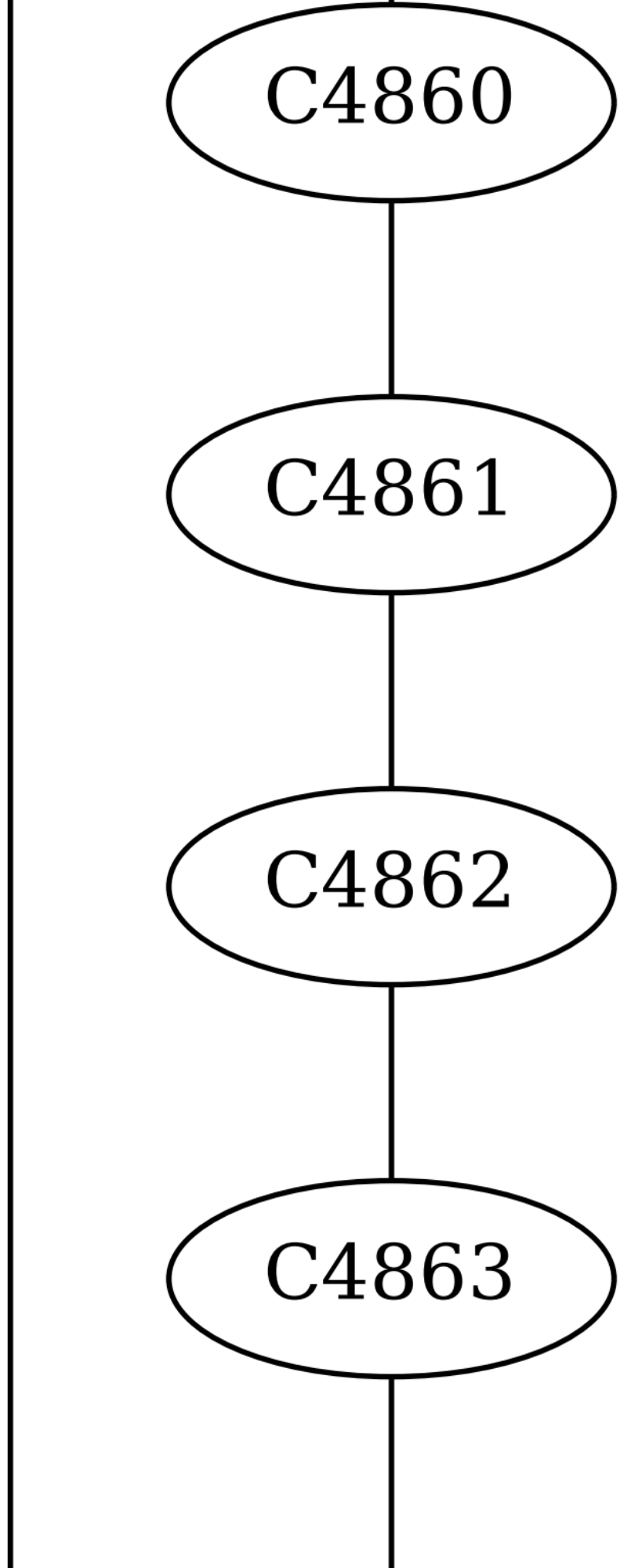
C4860
C4861
C4862
C4863

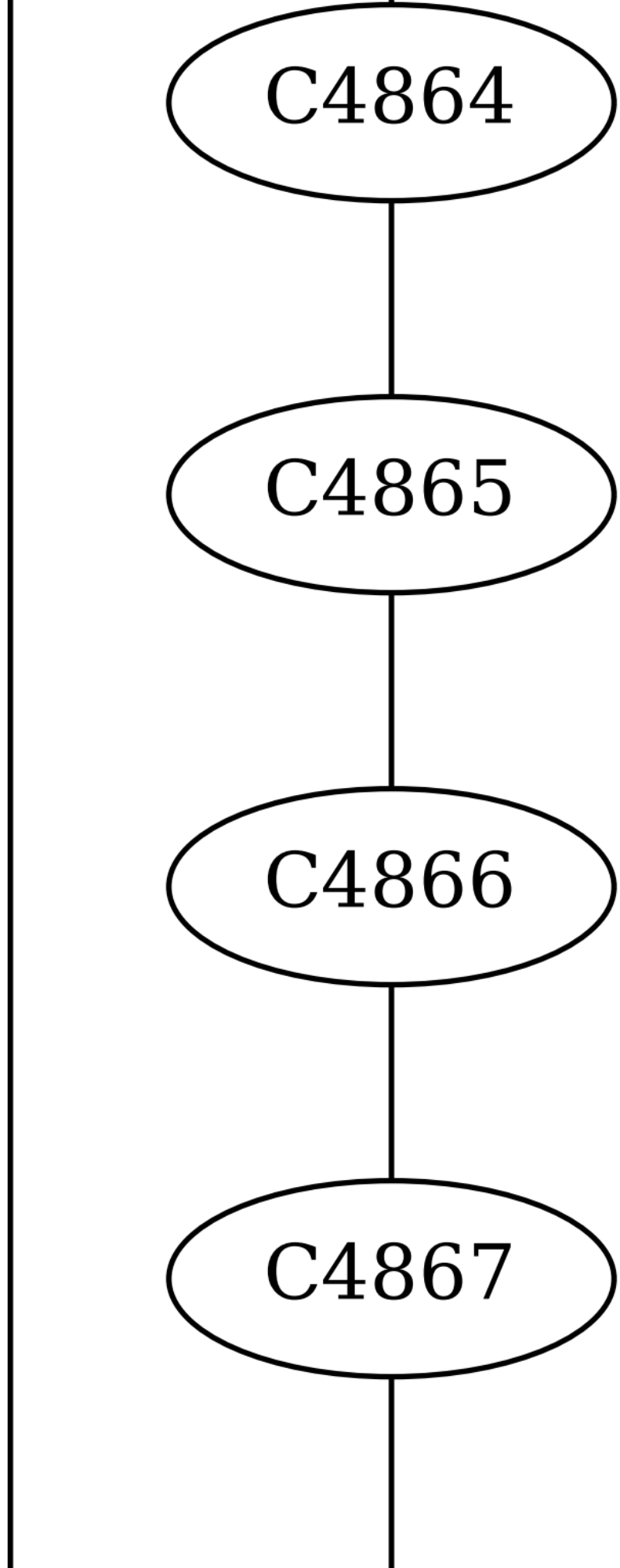
C4864
C4865
C4866
C4867

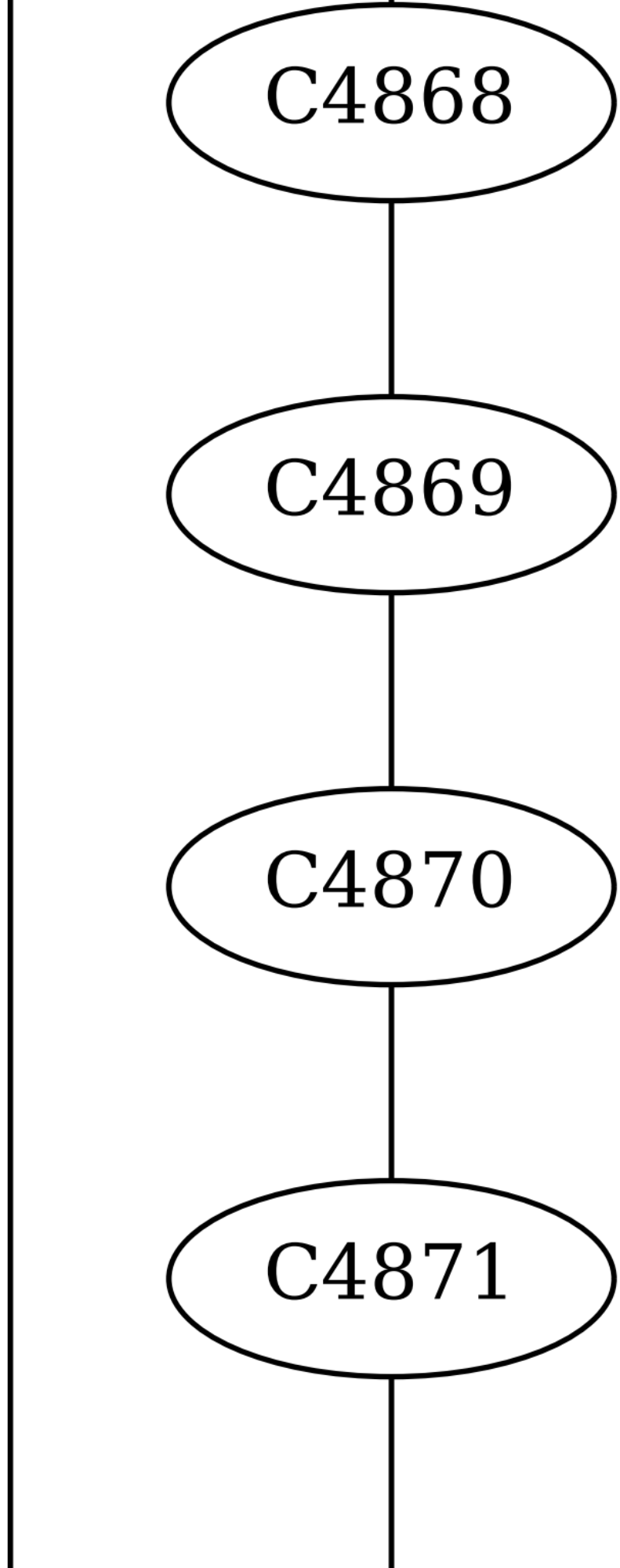
C4868
C4869
C4870
C4871

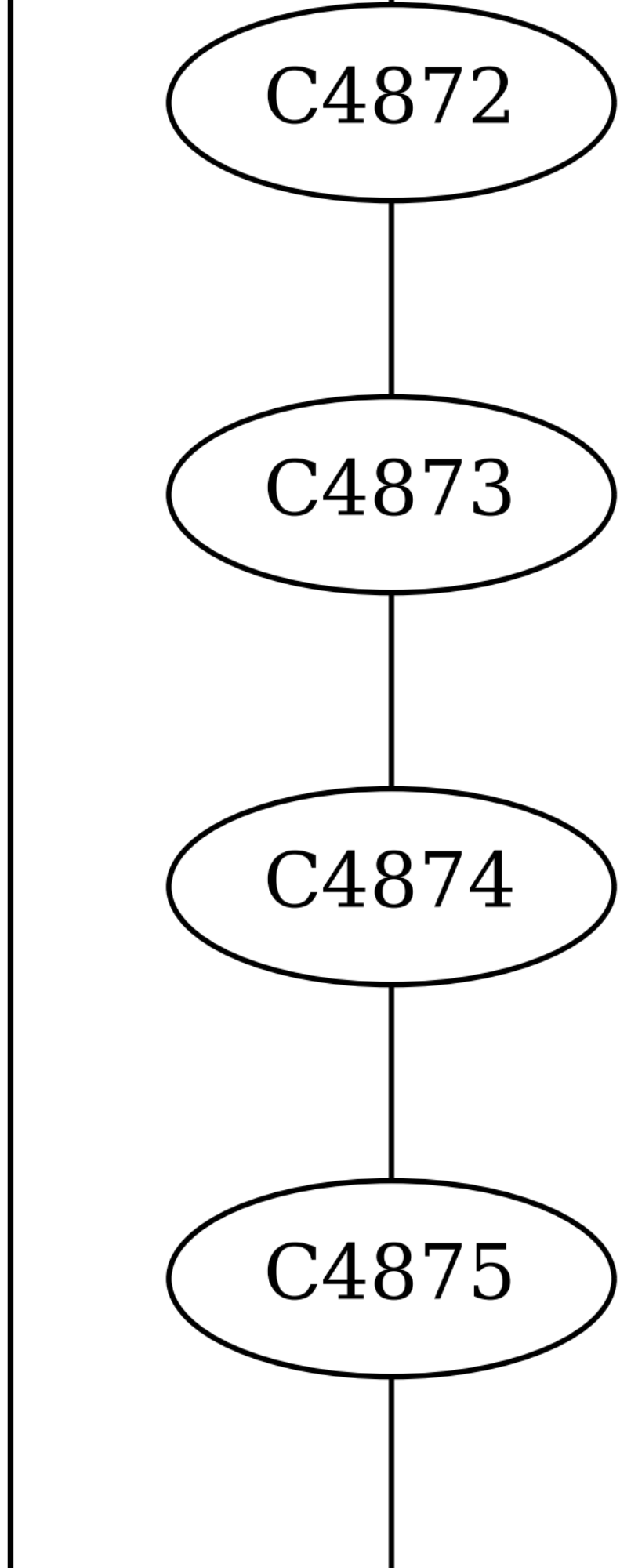
C4872
C4873
C4874
C4875

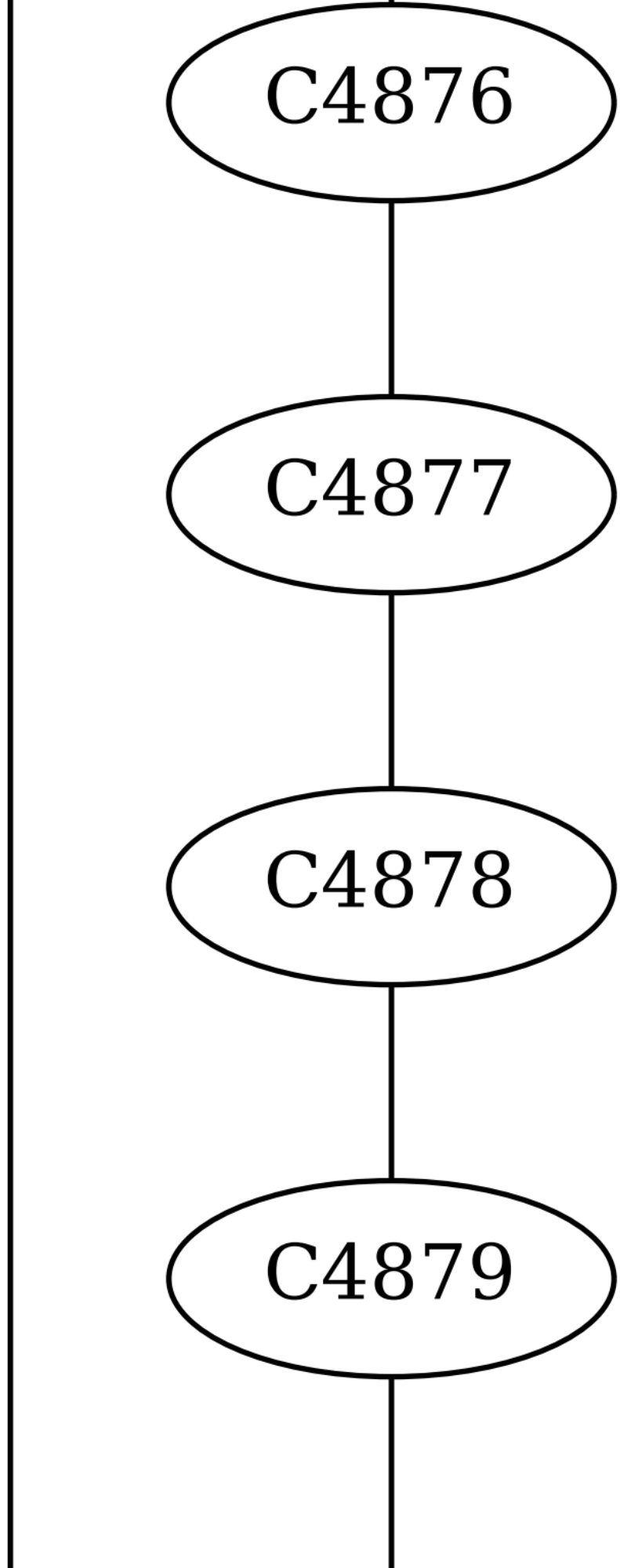
C4876
C4877
C4878
C4879

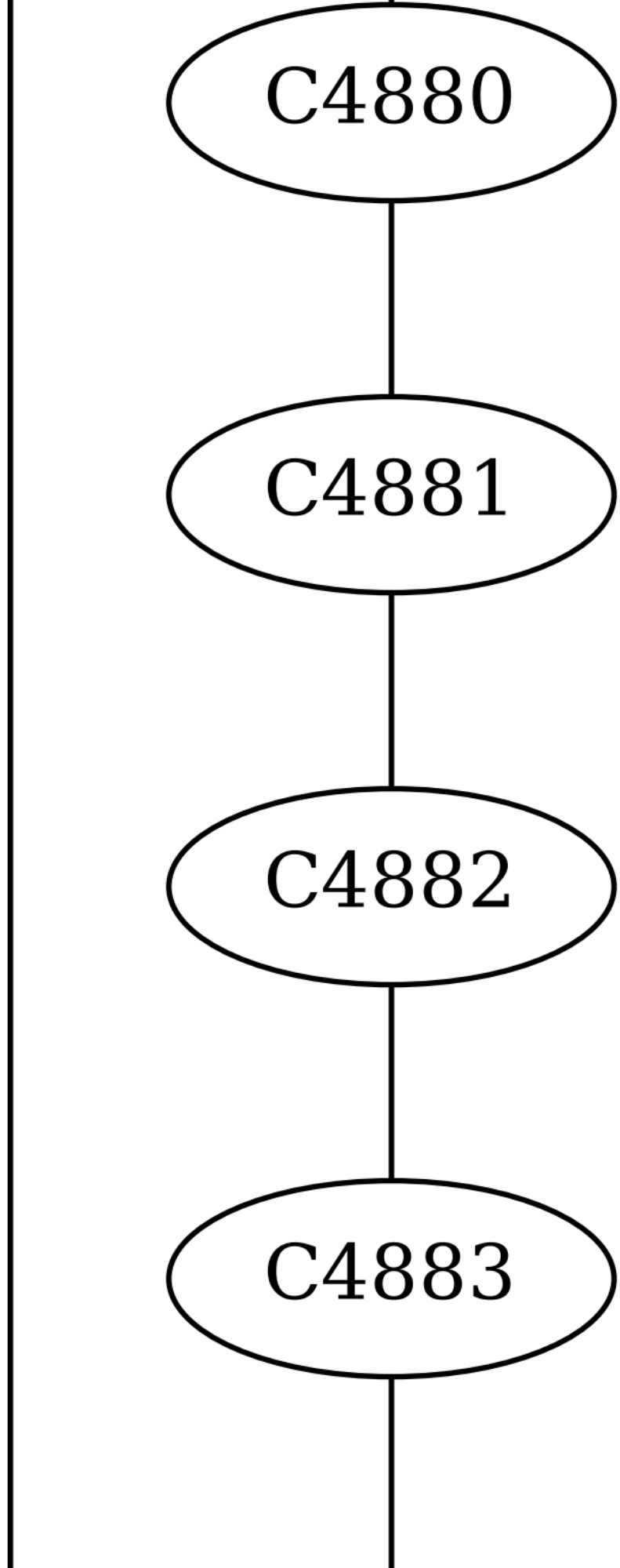
C4880
C4881
C4882
C4883

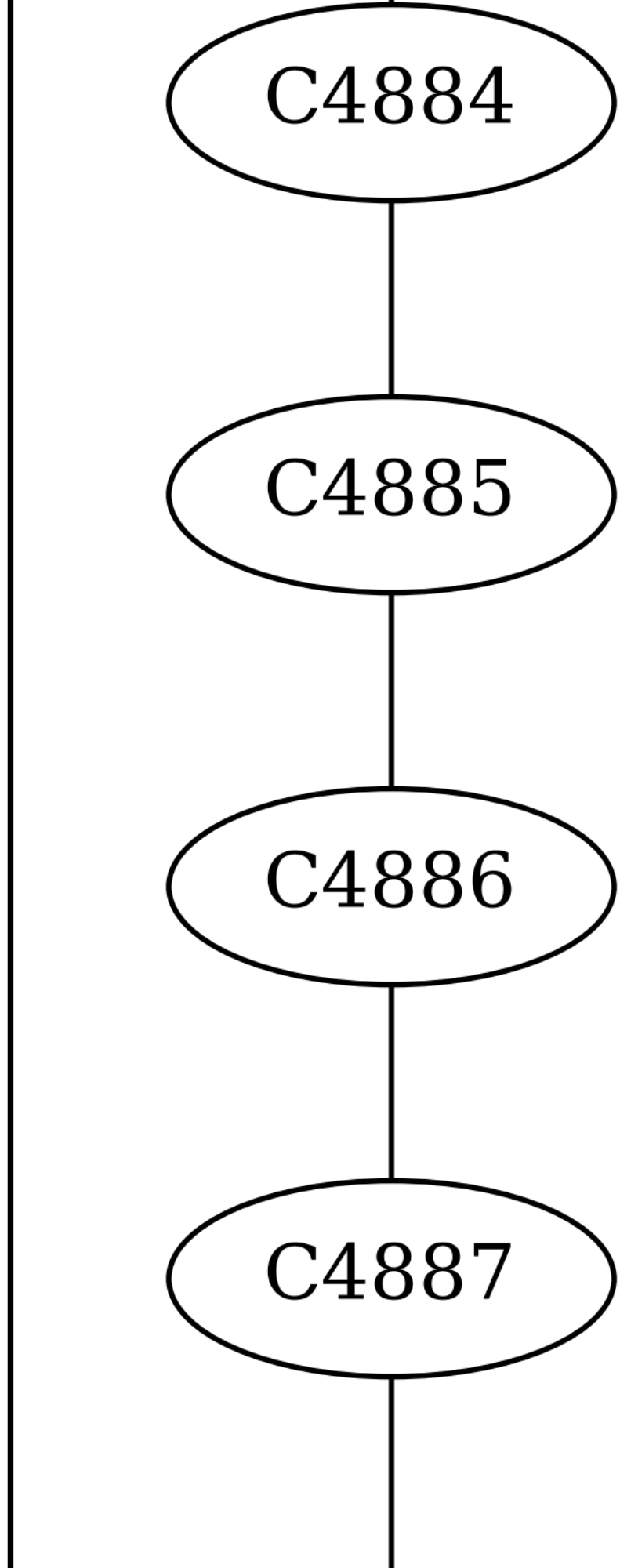
C4884
C4885
C4886
C4887

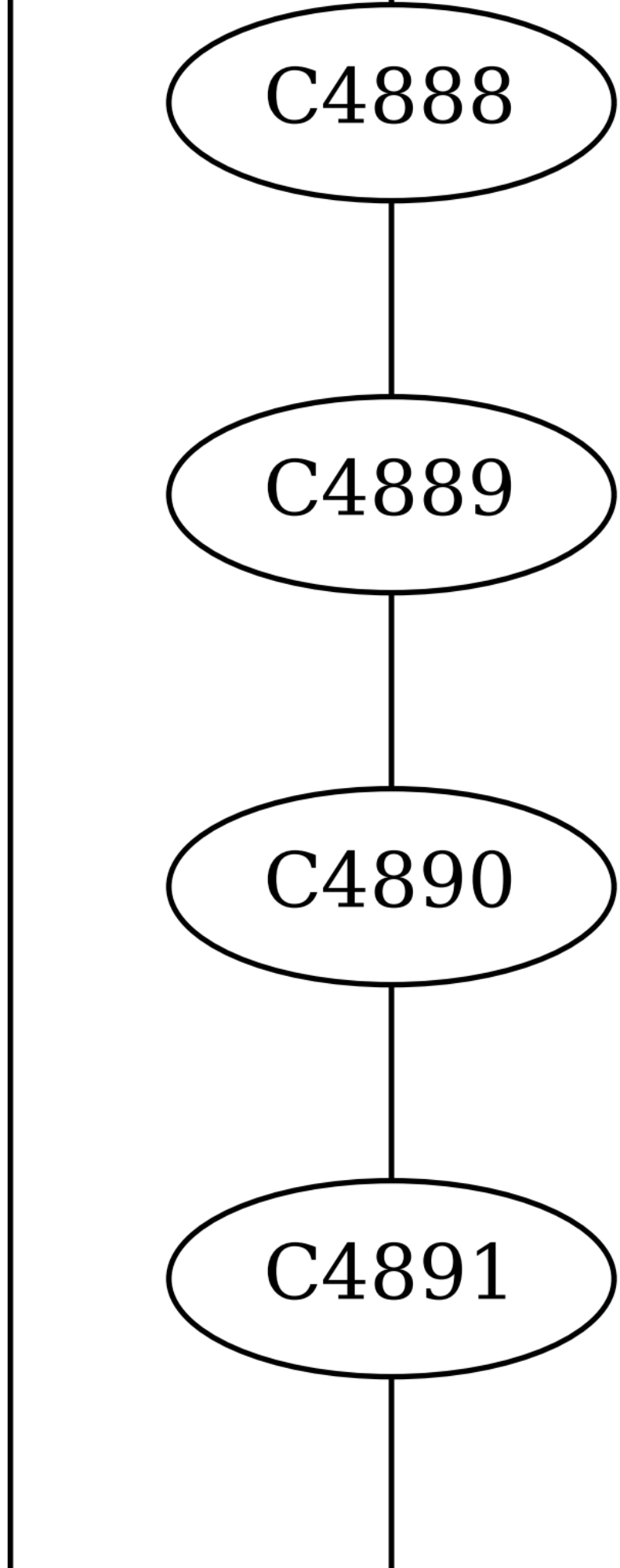
C4888
C4889
C4890
C4891

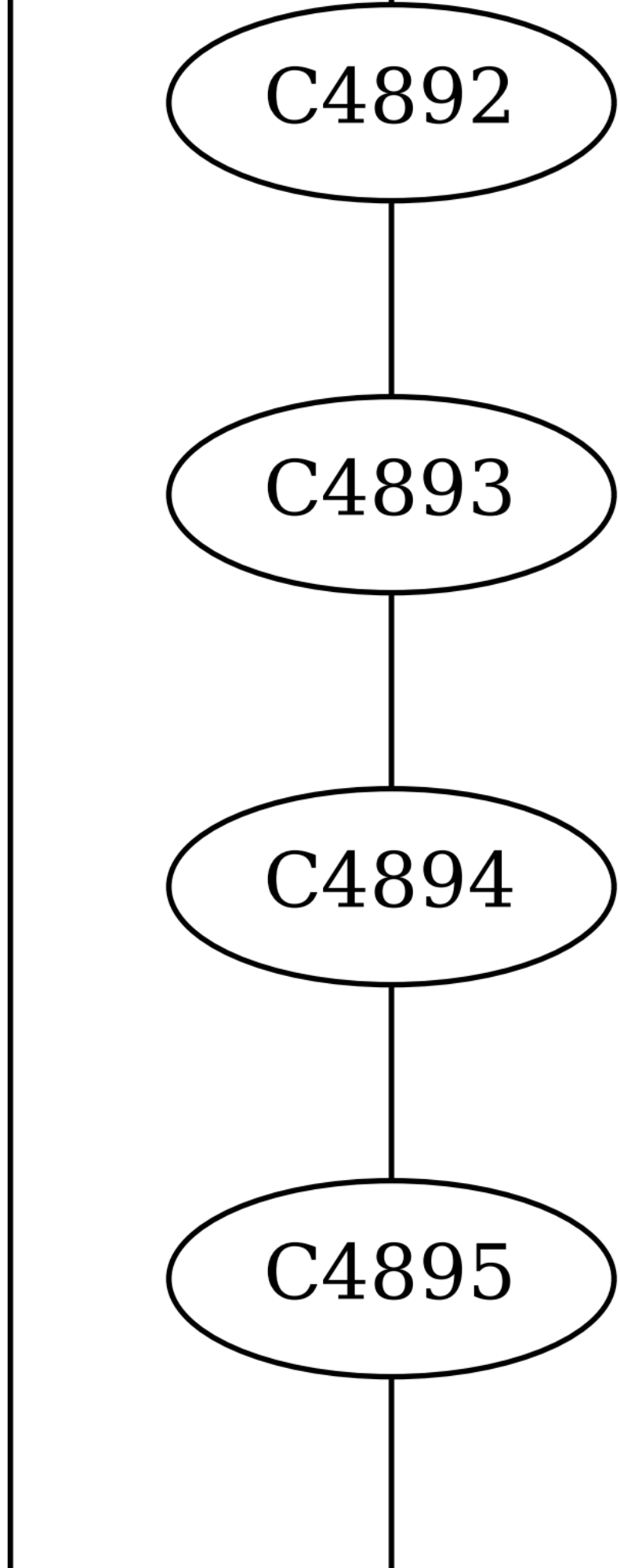
C4892
C4893
C4894
C4895

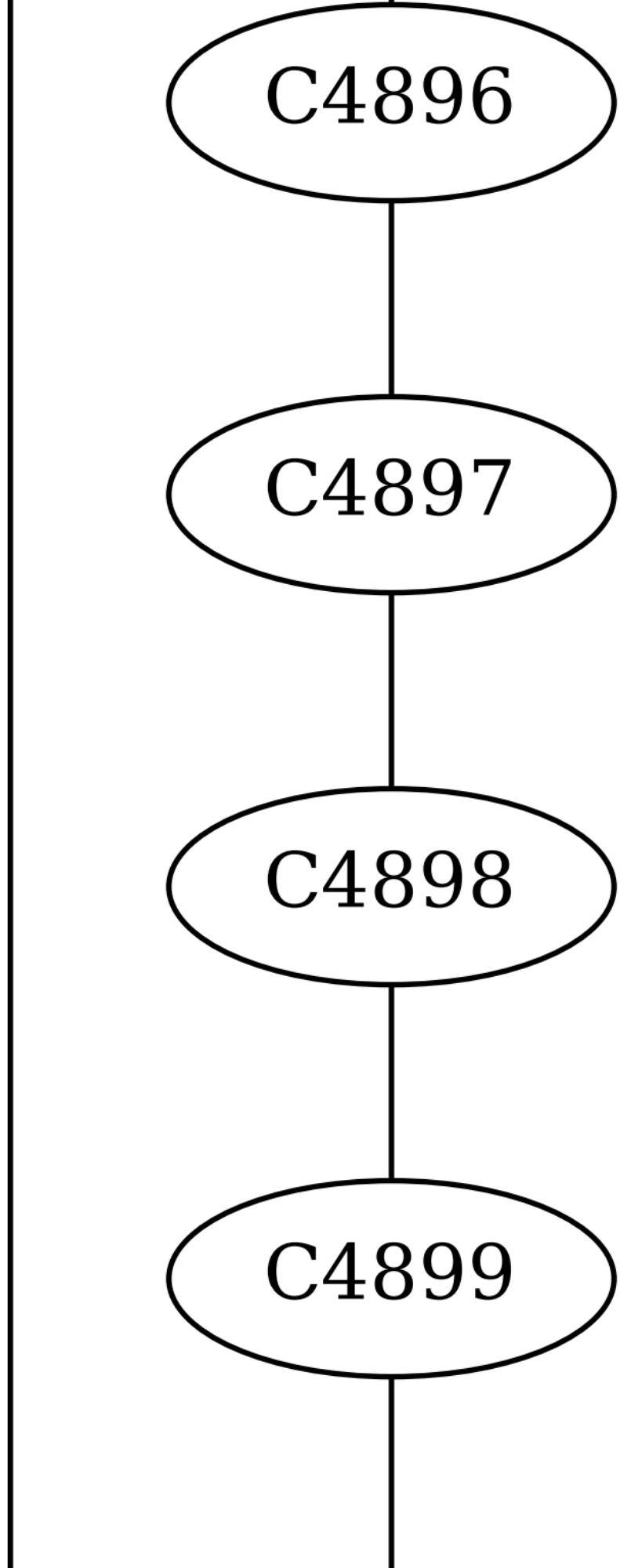
C4896
C4897
C4898
C4899

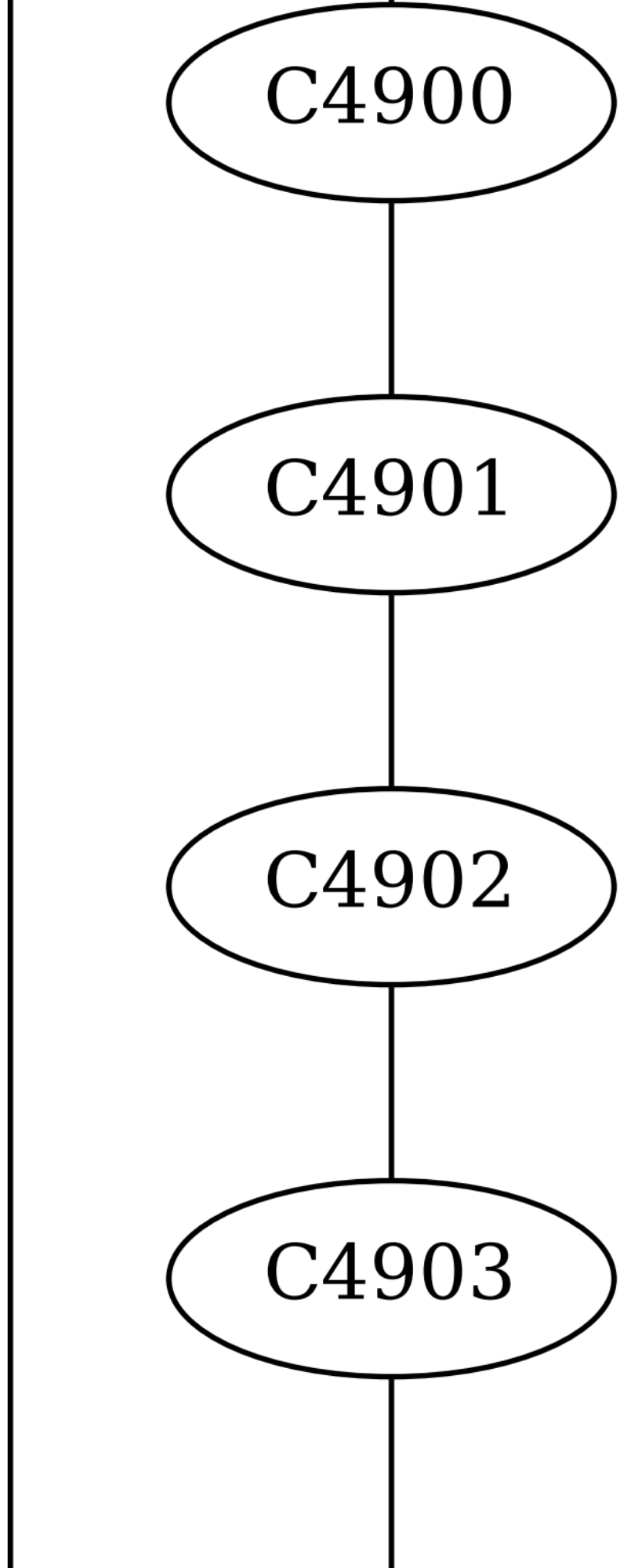
C4900
C4901
C4902
C4903

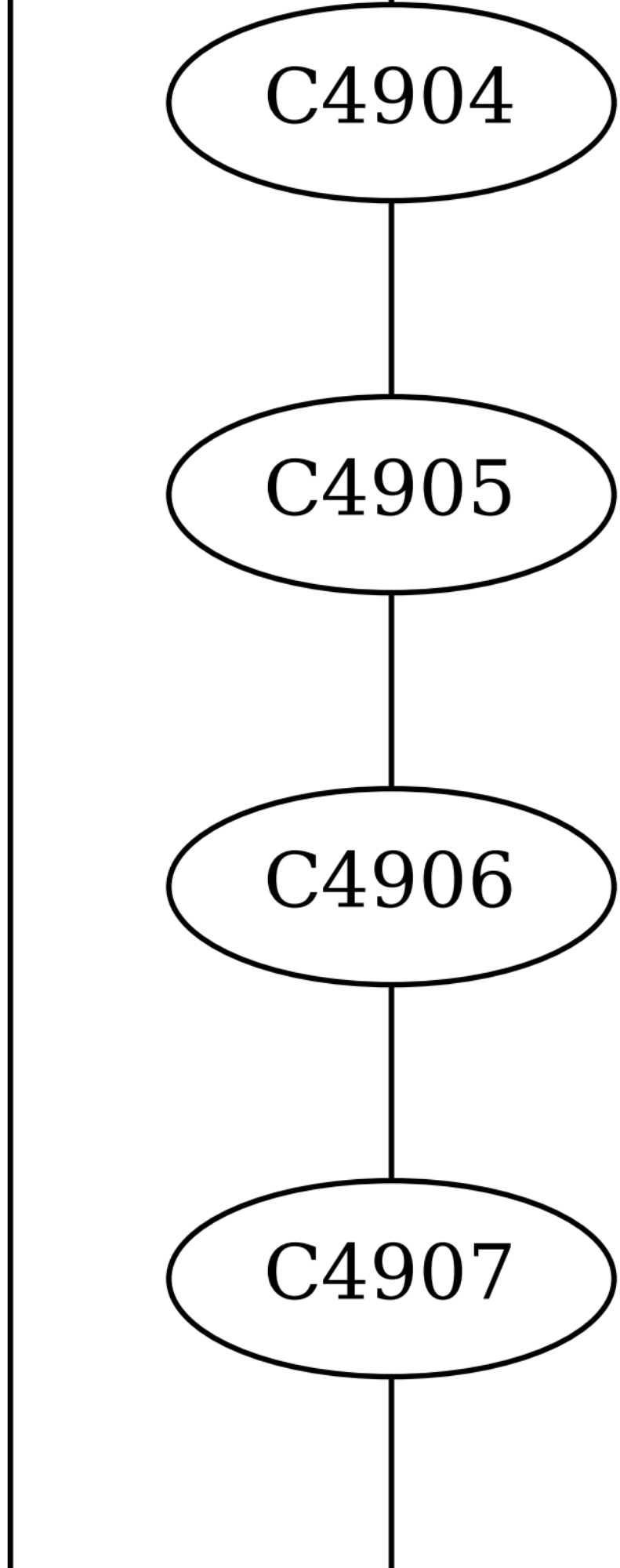
C4904
C4905
C4906
C4907

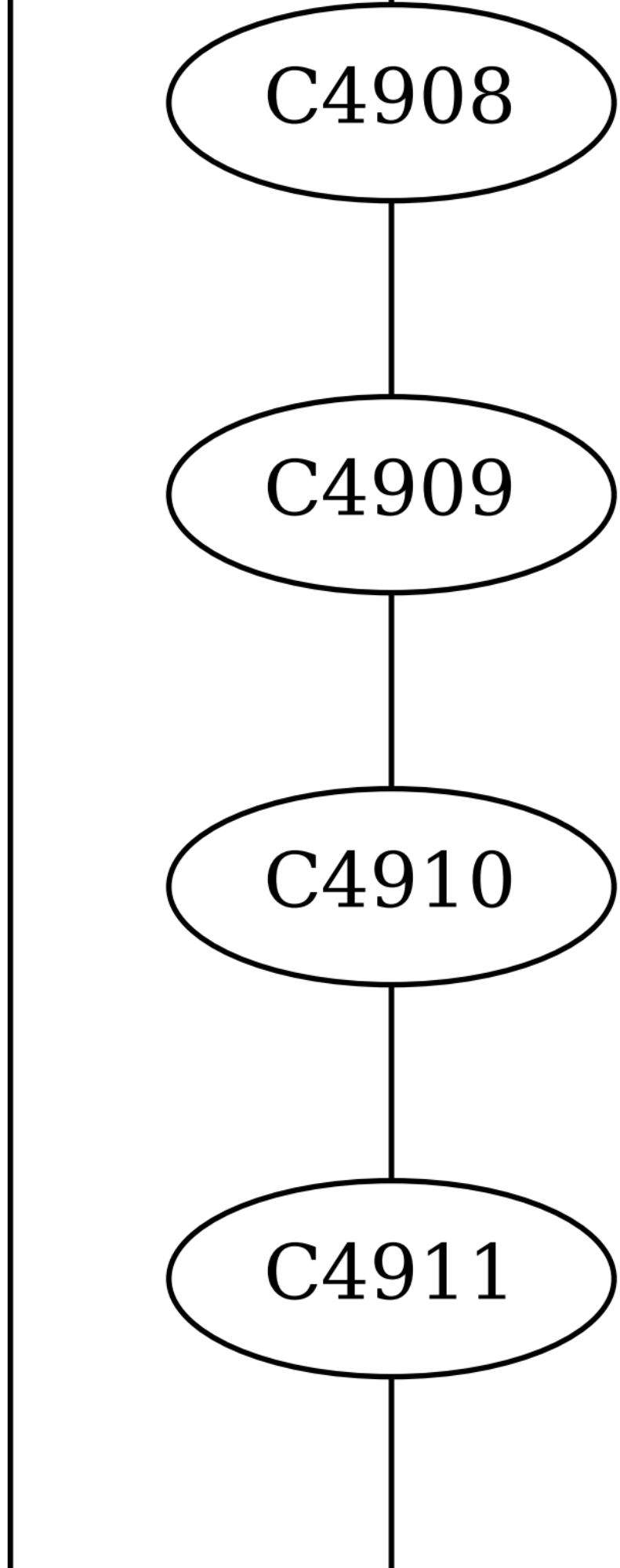
C4908
C4909
C4910
C4911

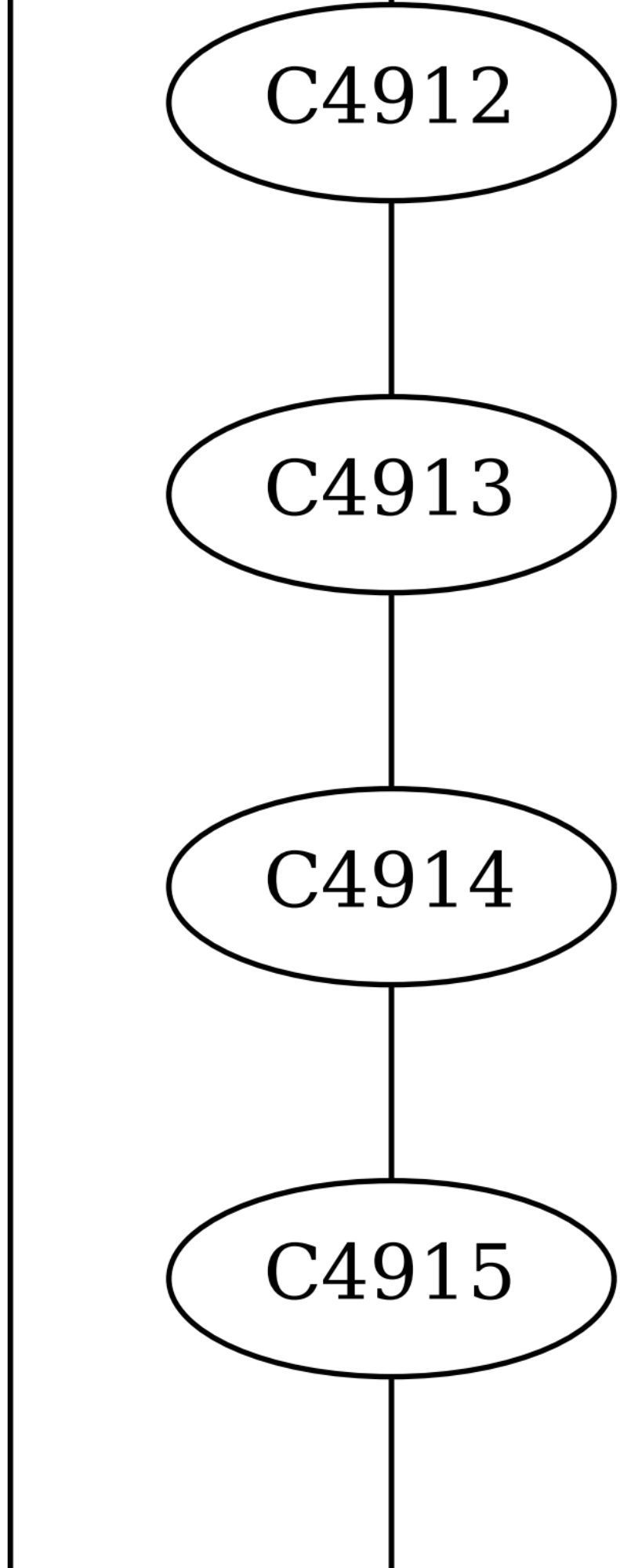
C4912
C4913
C4914
C4915

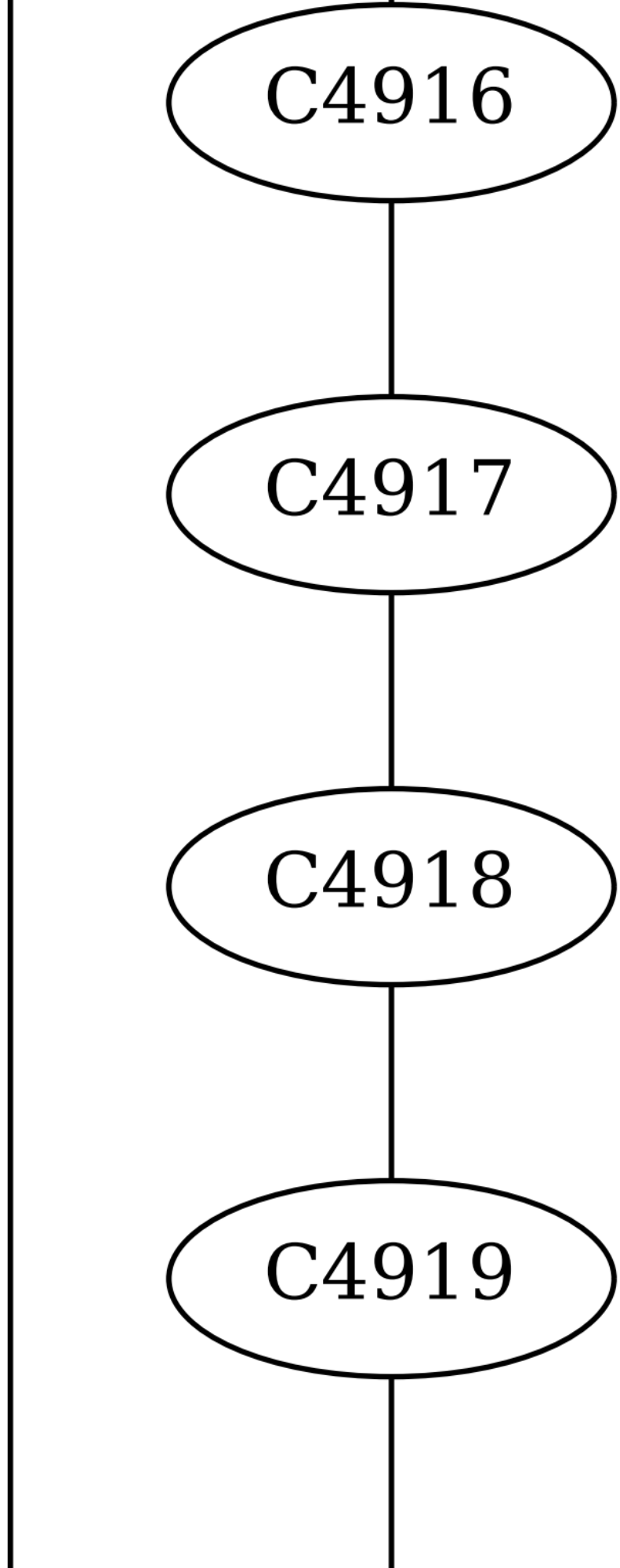
C4916
C4917
C4918
C4919

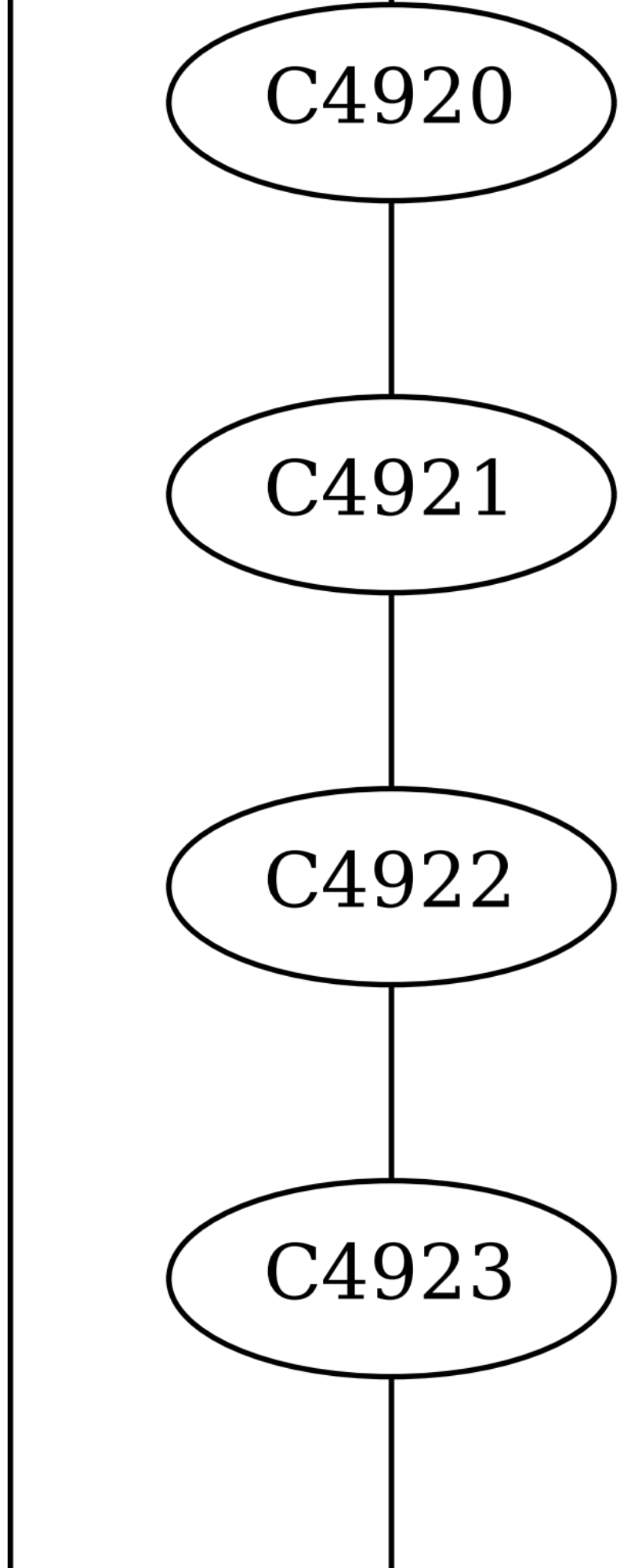
C4920
C4921
C4922
C4923

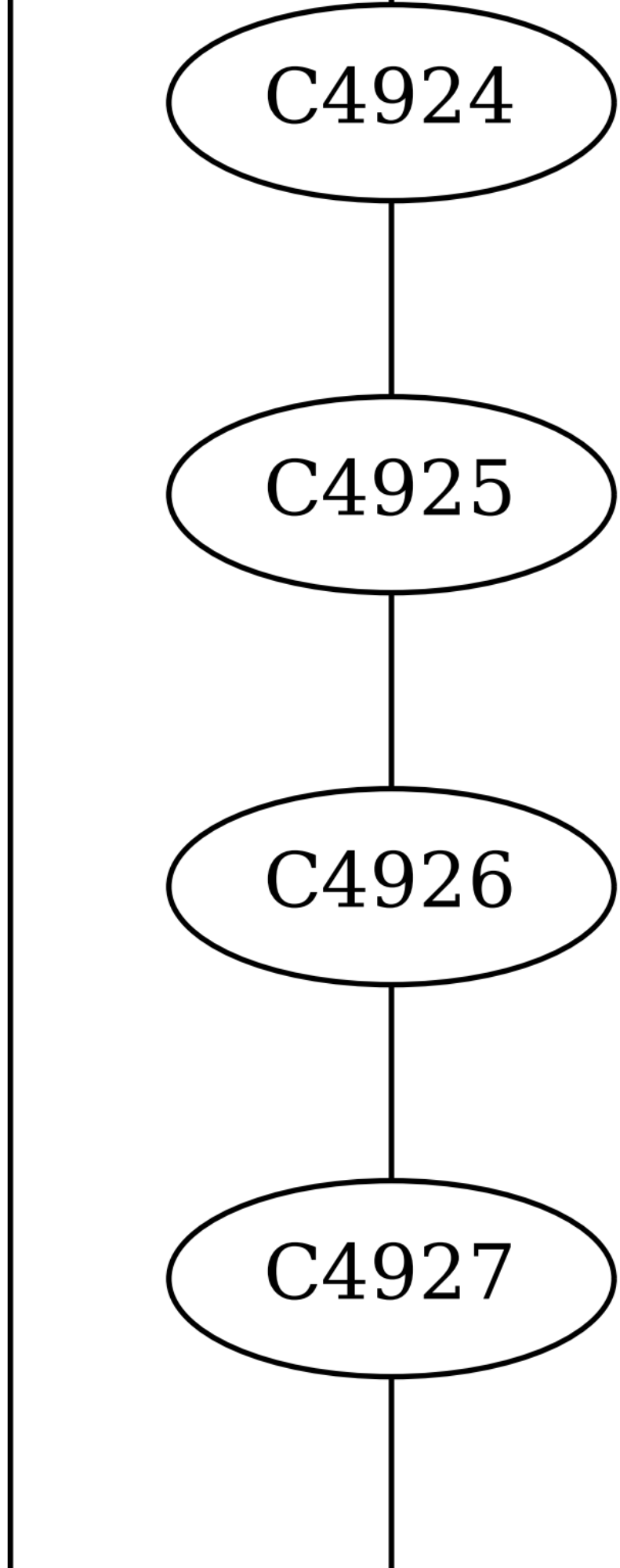
C4924
C4925
C4926
C4927

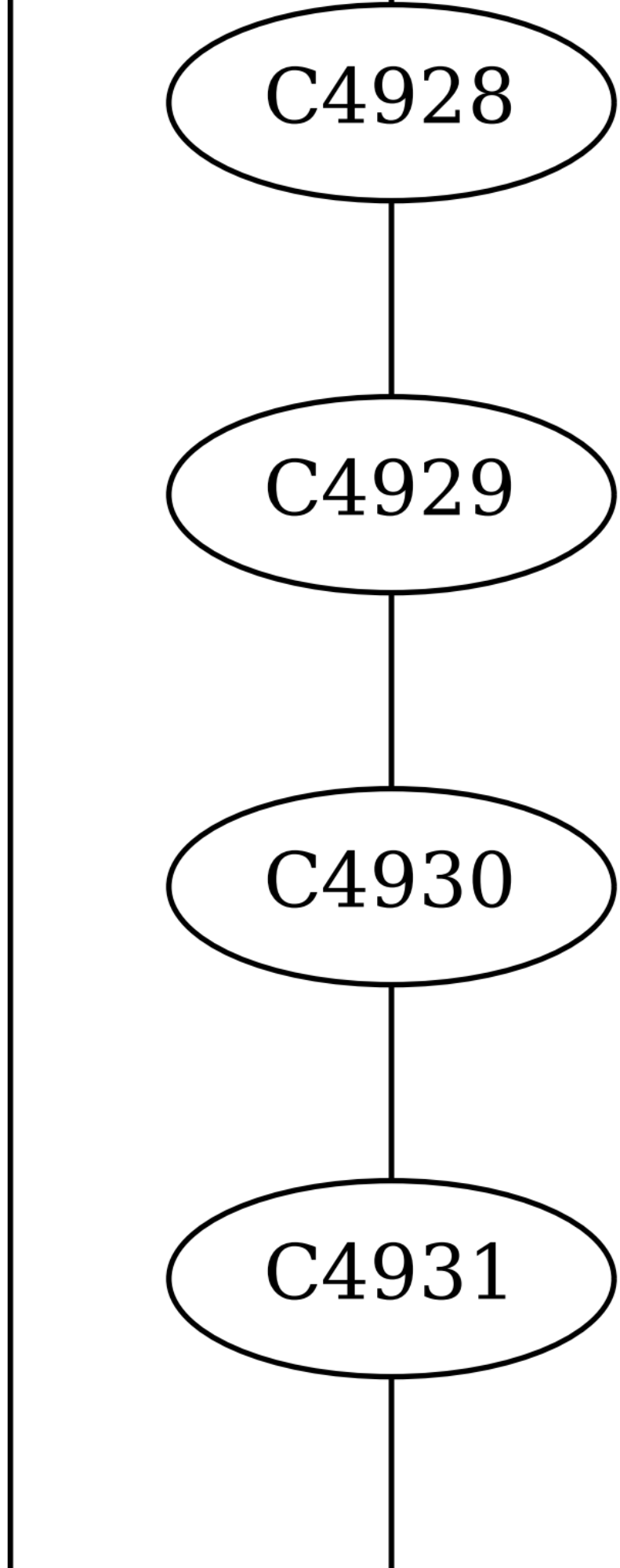
C4928
C4929
C4930
C4931

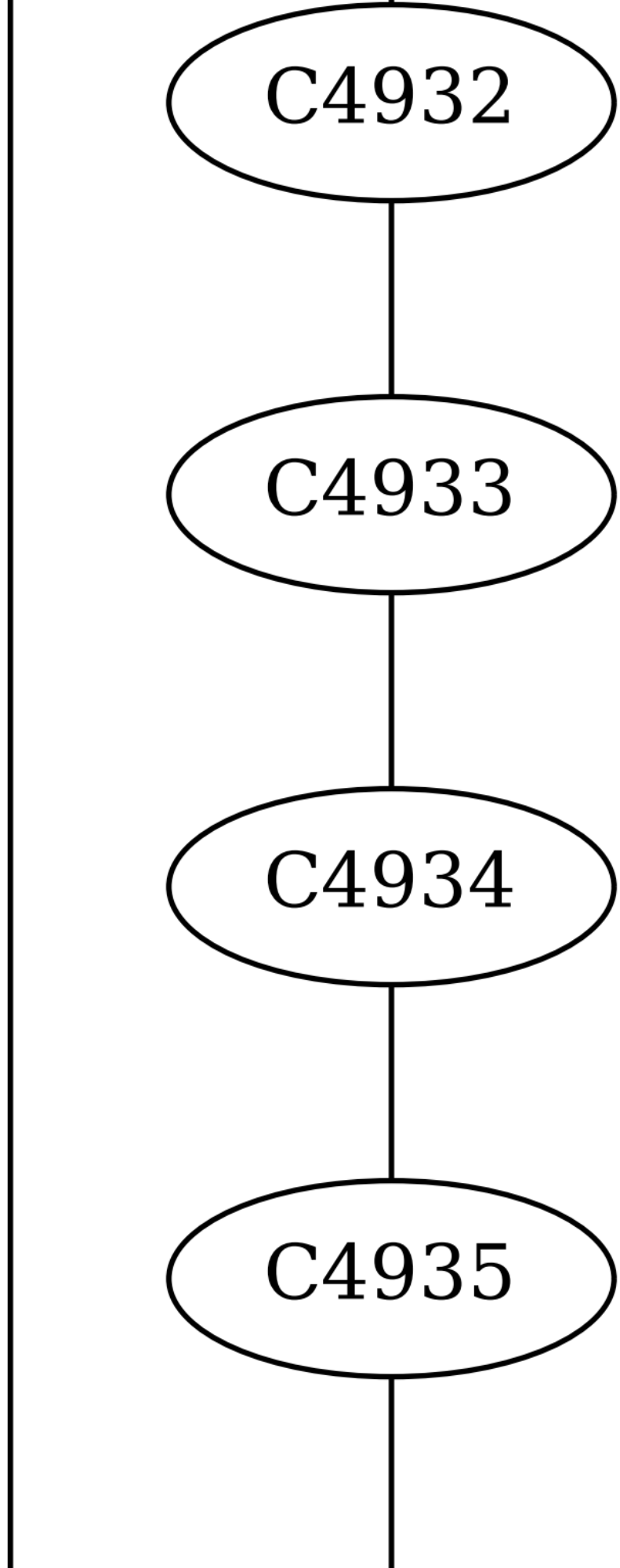
C4932
C4933
C4934
C4935

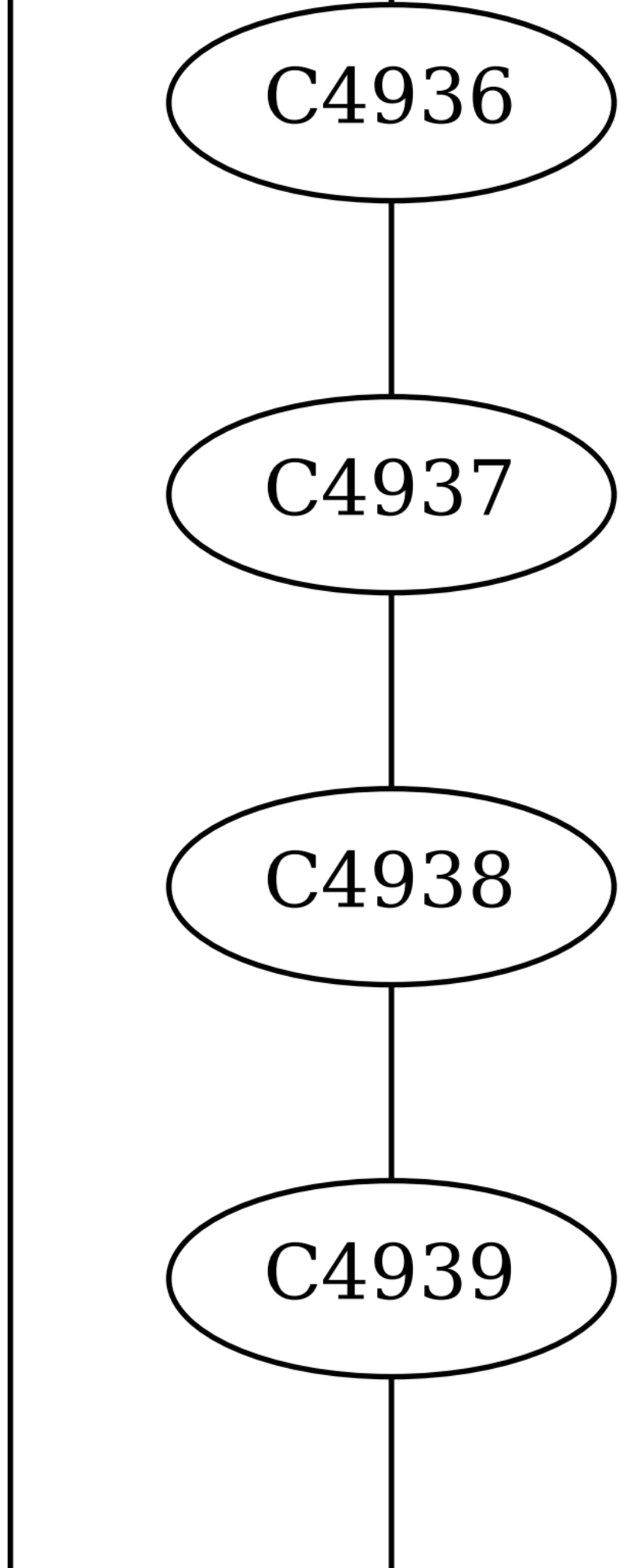
C4936
C4937
C4938
C4939

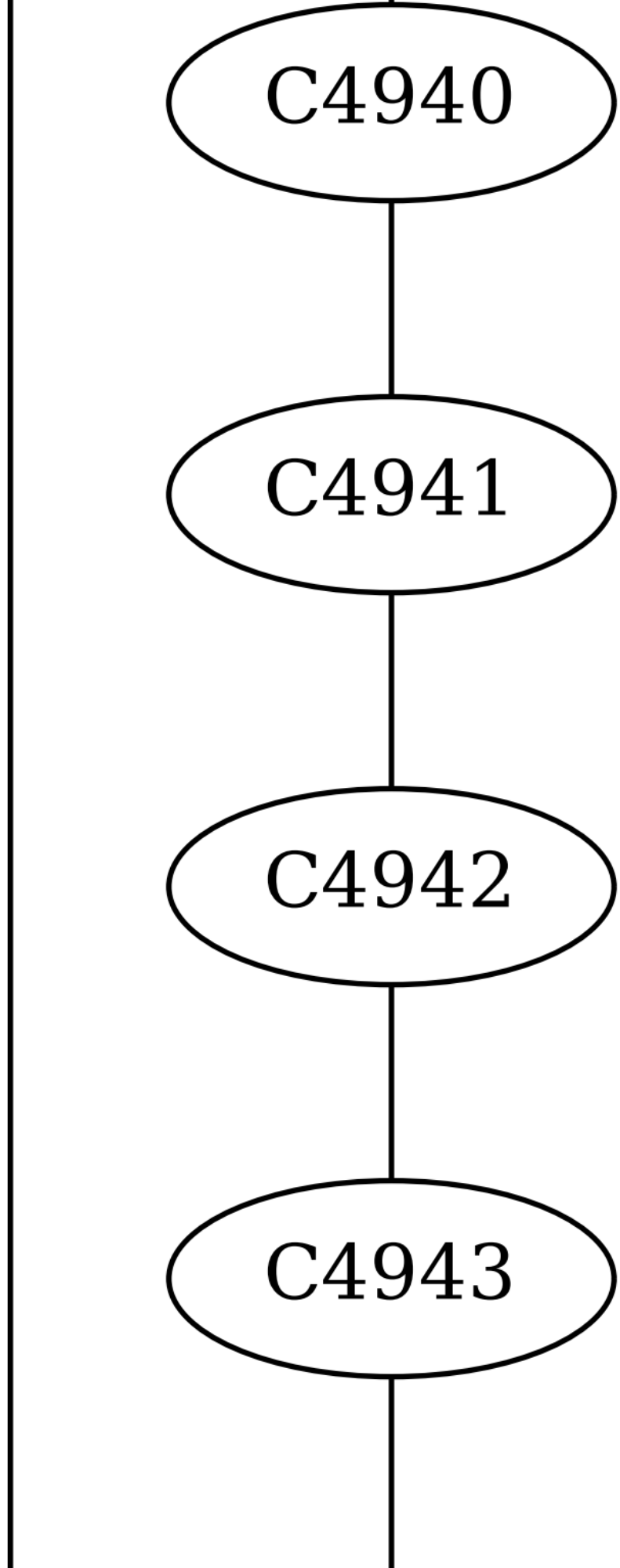
C4940
C4941
C4942
C4943

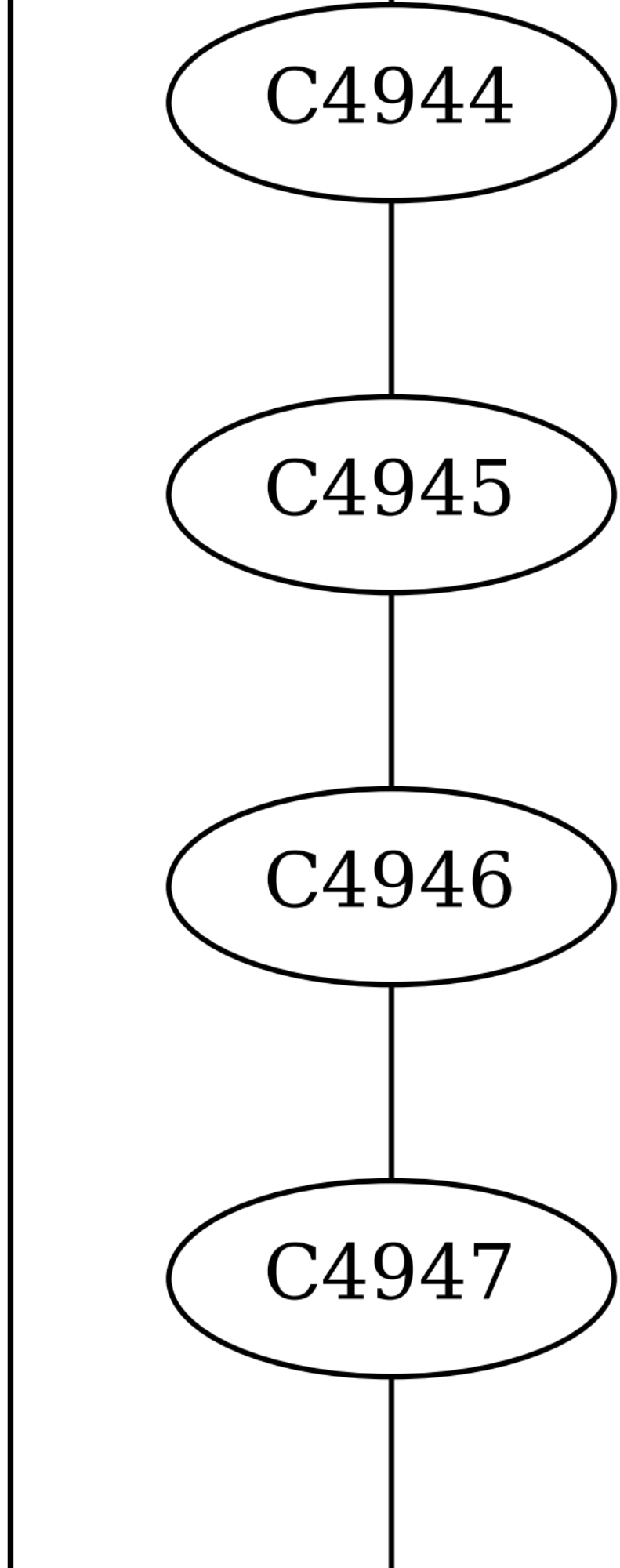
C4944
C4945
C4946
C4947

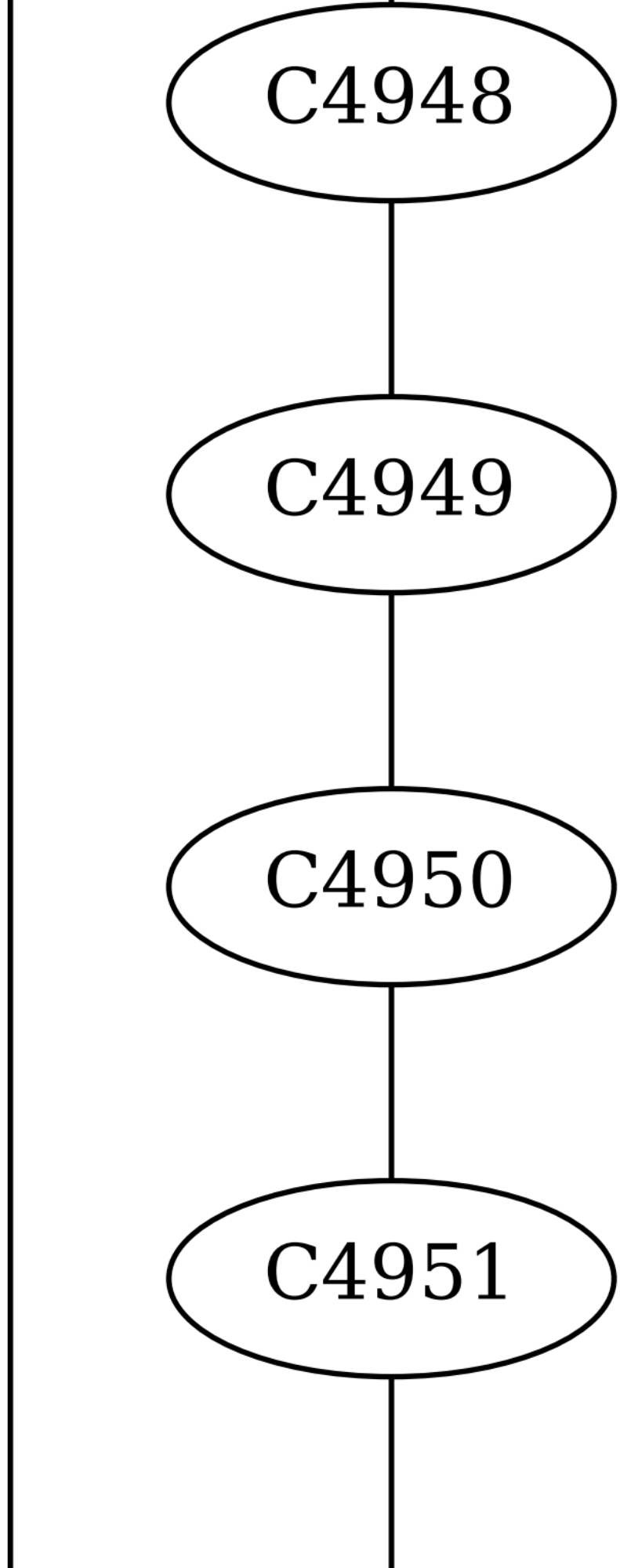
C4948
C4949
C4950
C4951

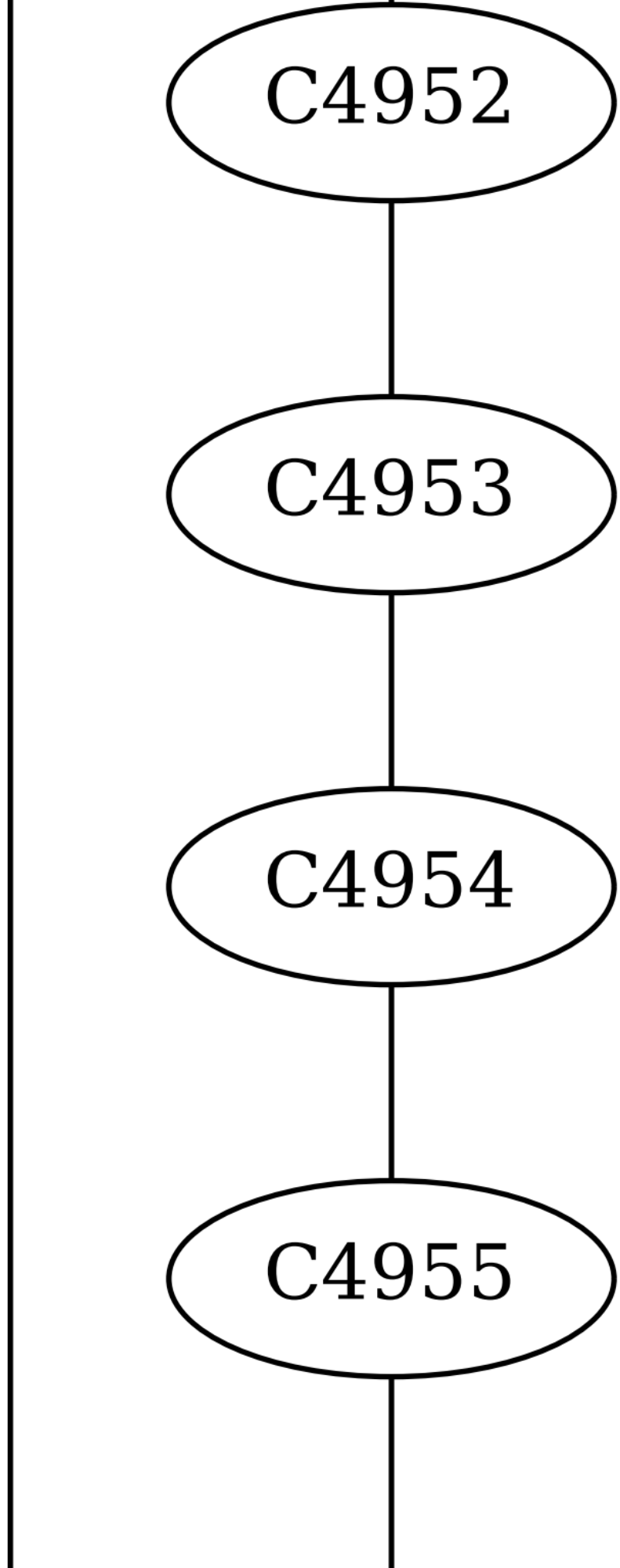
C4952
C4953
C4954
C4955

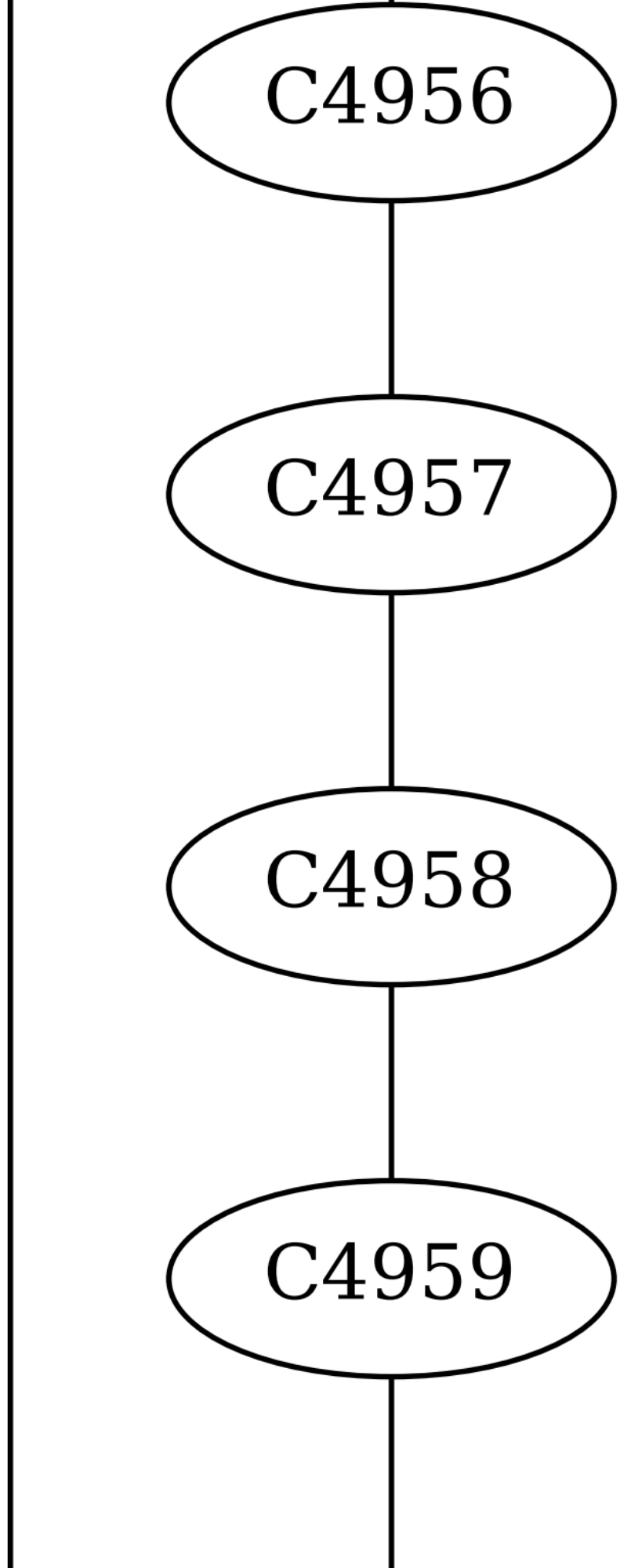
C4956
C4957
C4958
C4959

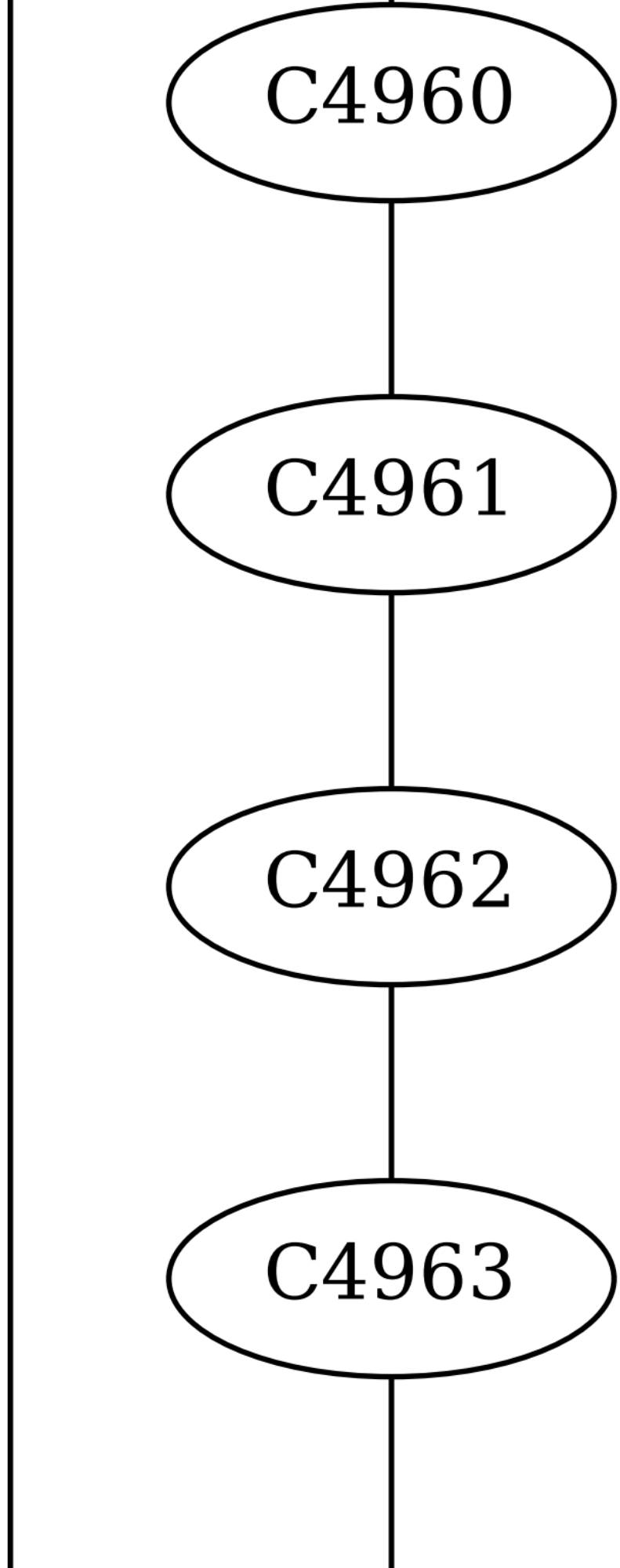
C4960
C4961
C4962
C4963

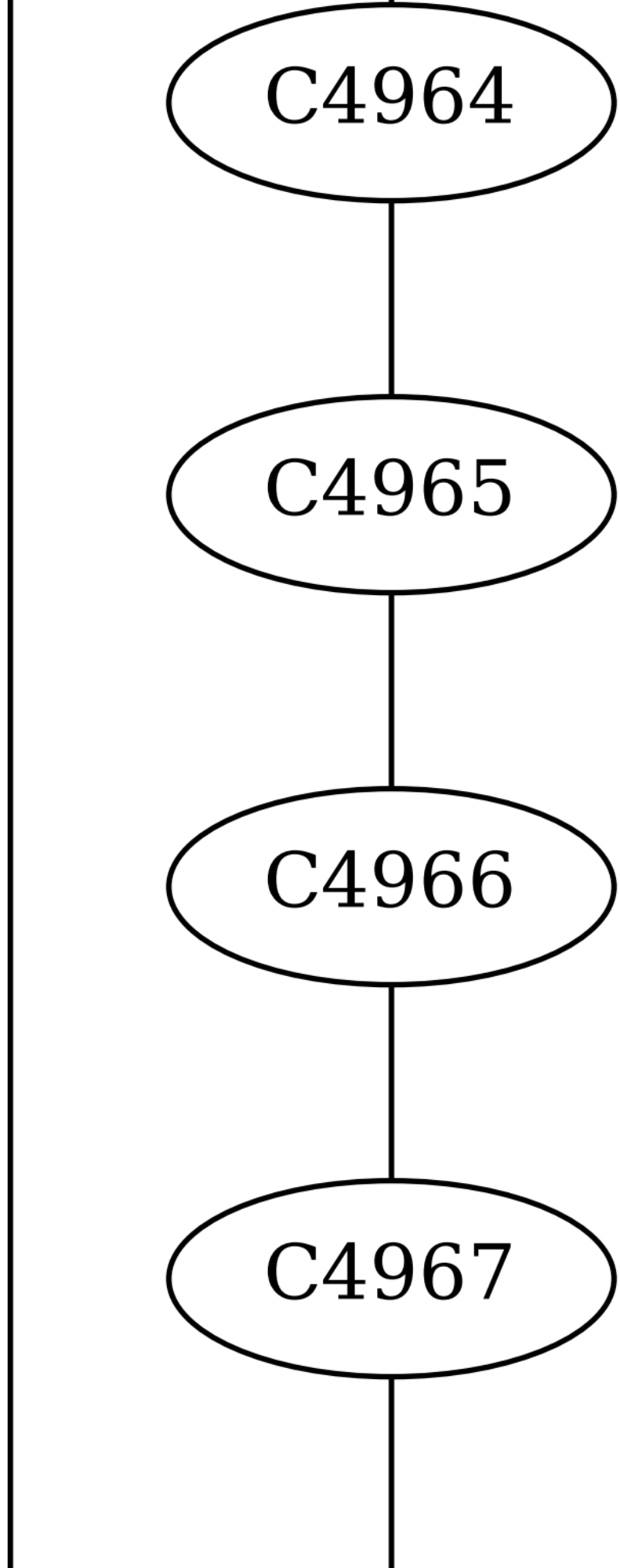
C4964
C4965
C4966
C4967

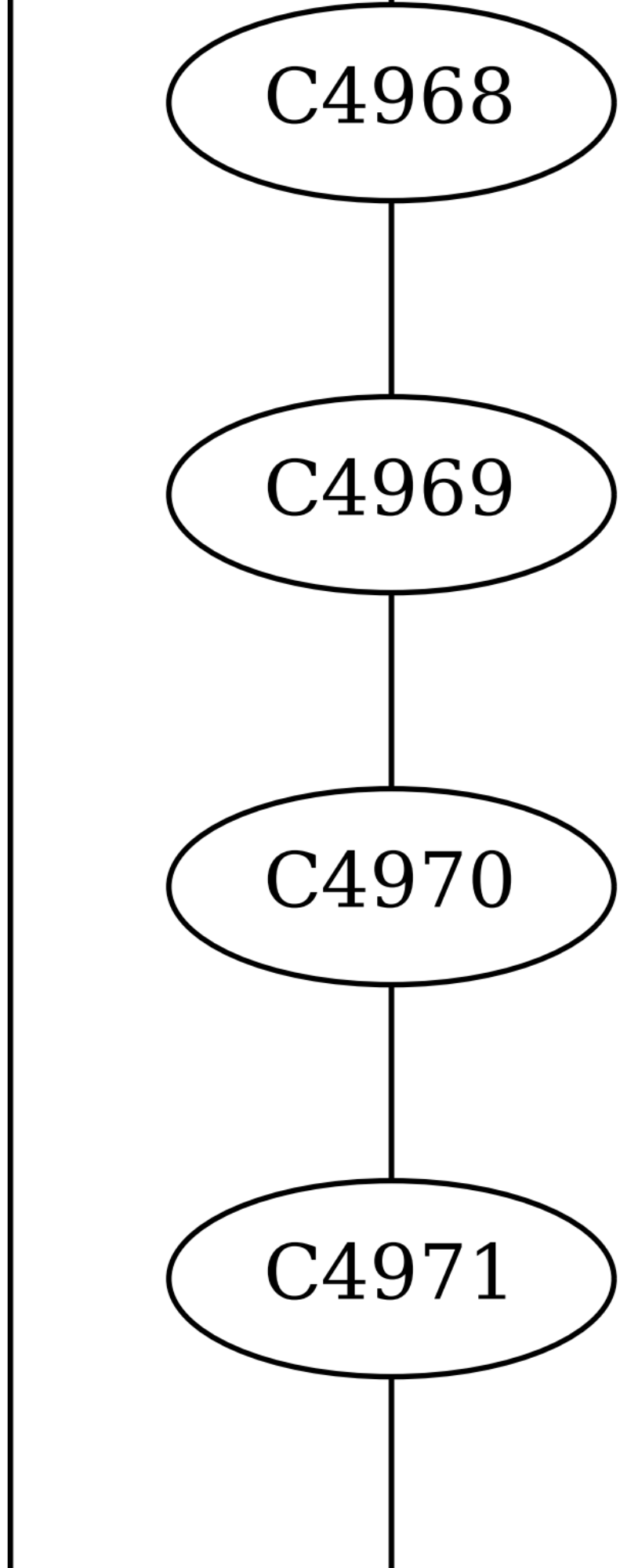
C4968
C4969
C4970
C4971

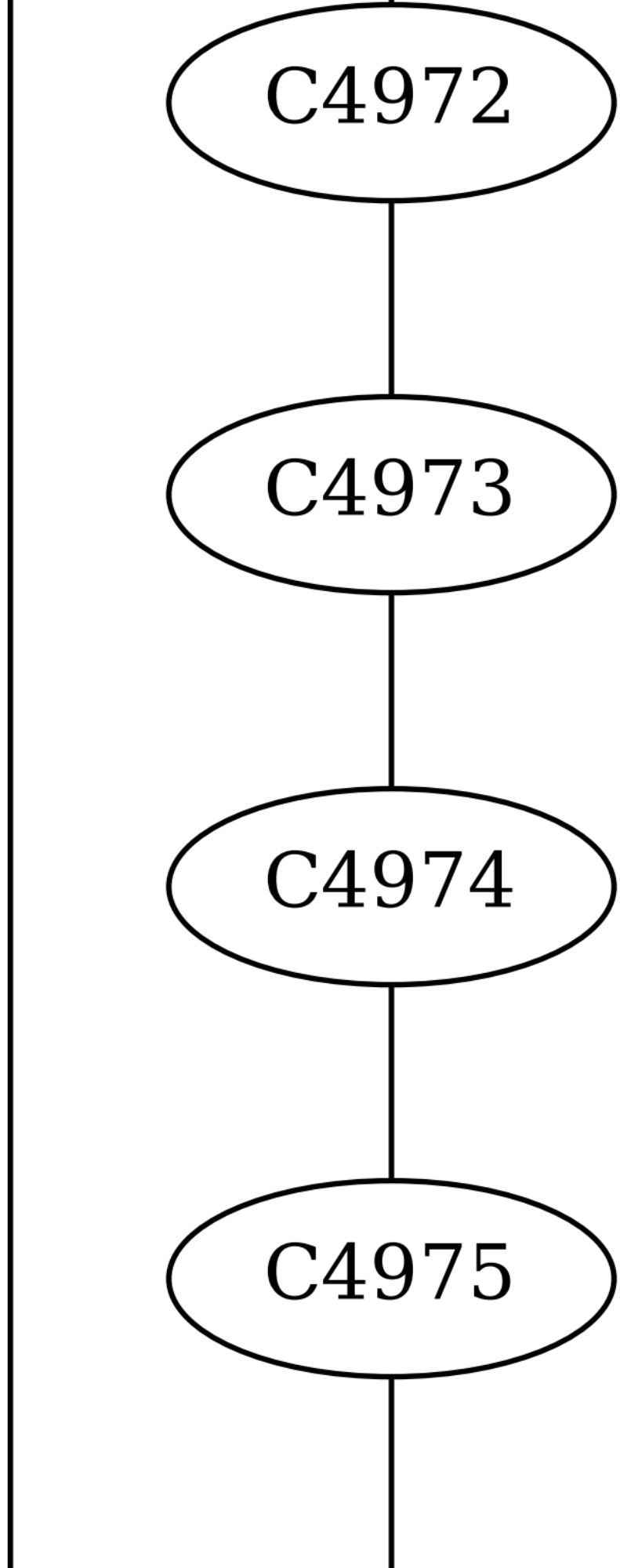
C4972
C4973
C4974
C4975

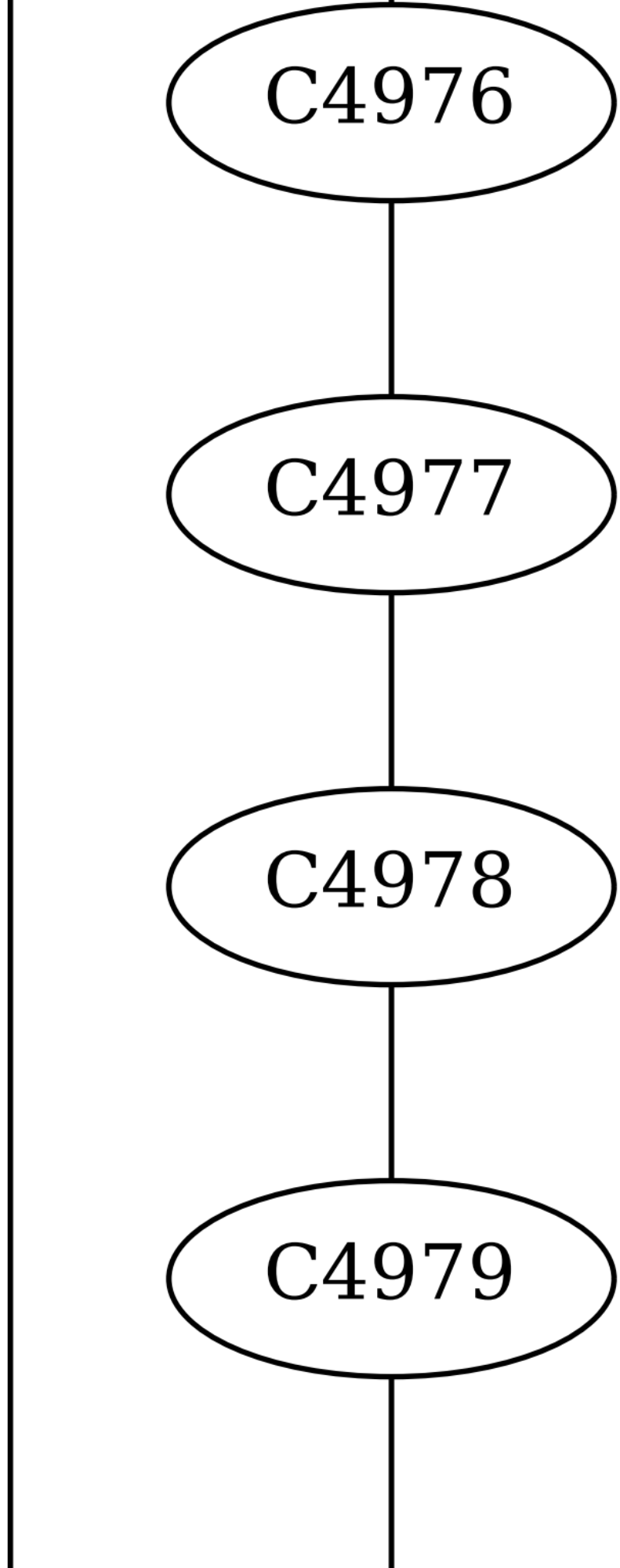
C4976
C4977
C4978
C4979

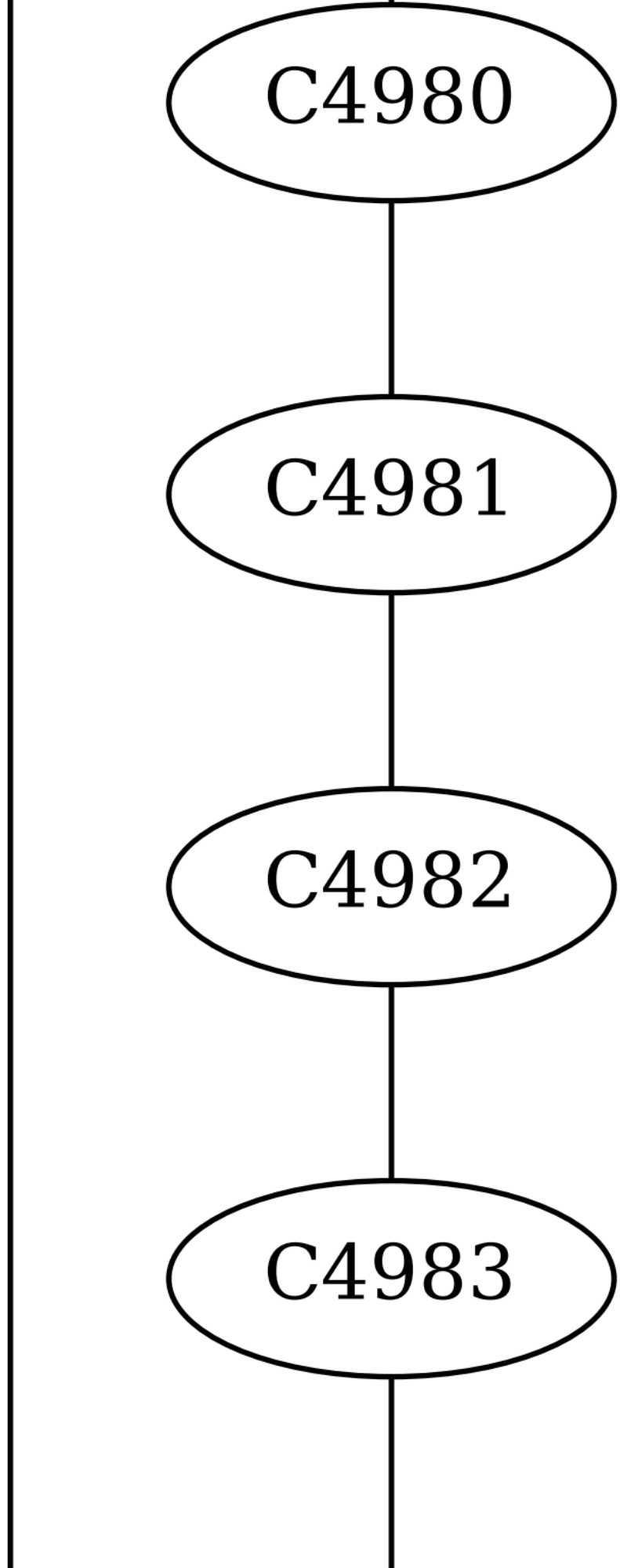
C4980
C4981
C4982
C4983

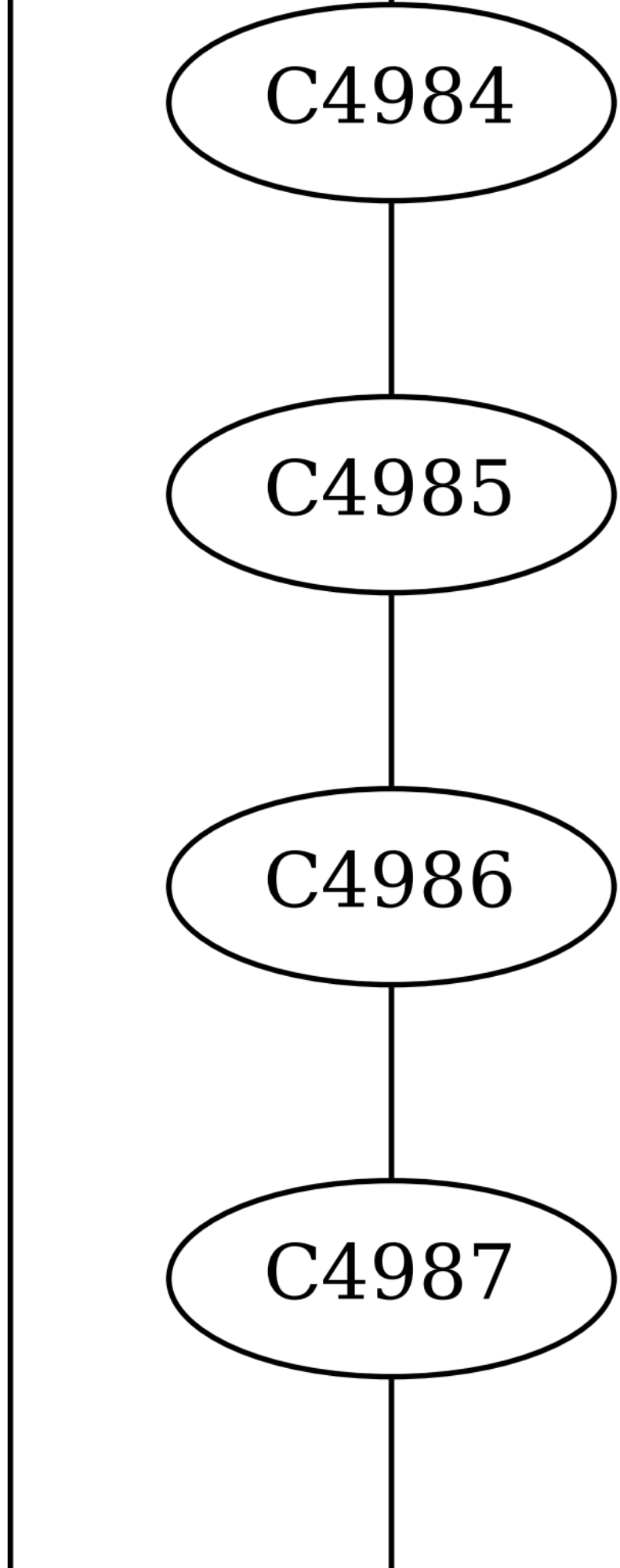
C4984
C4985
C4986
C4987

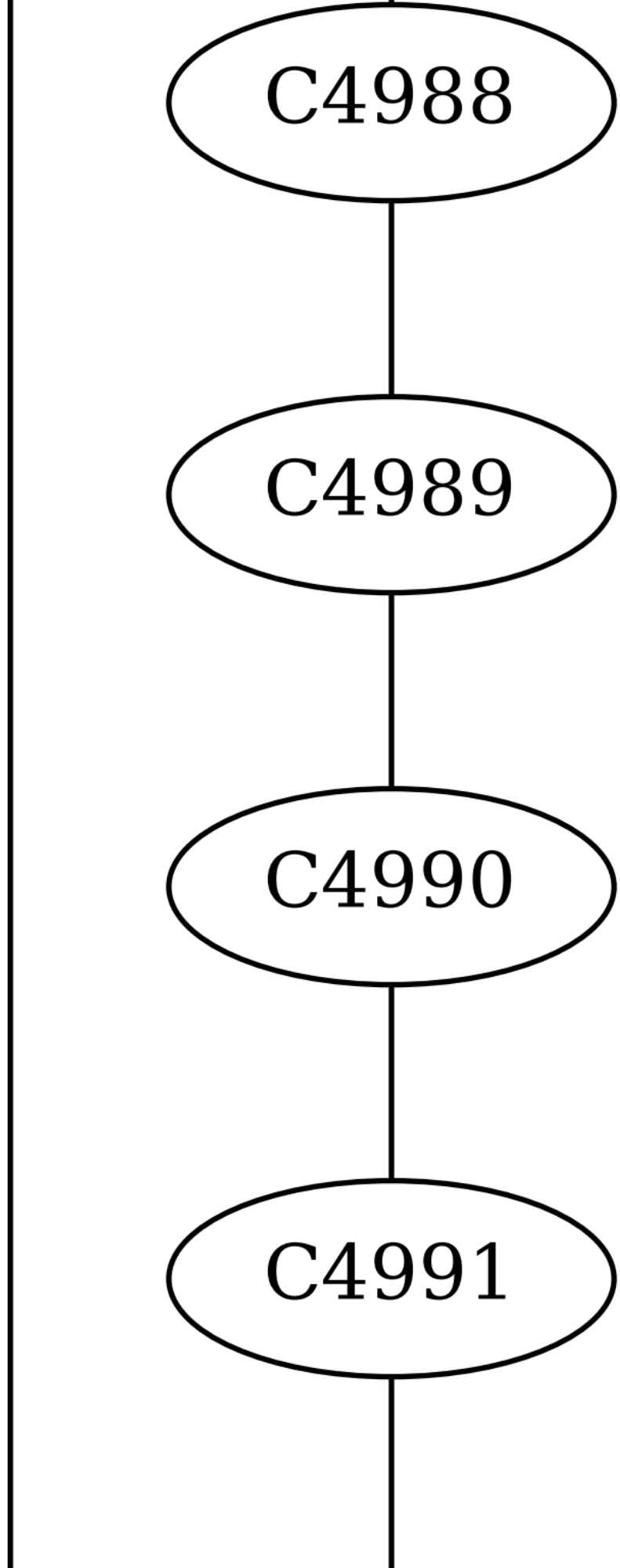
C4988
C4989
C4990
C4991

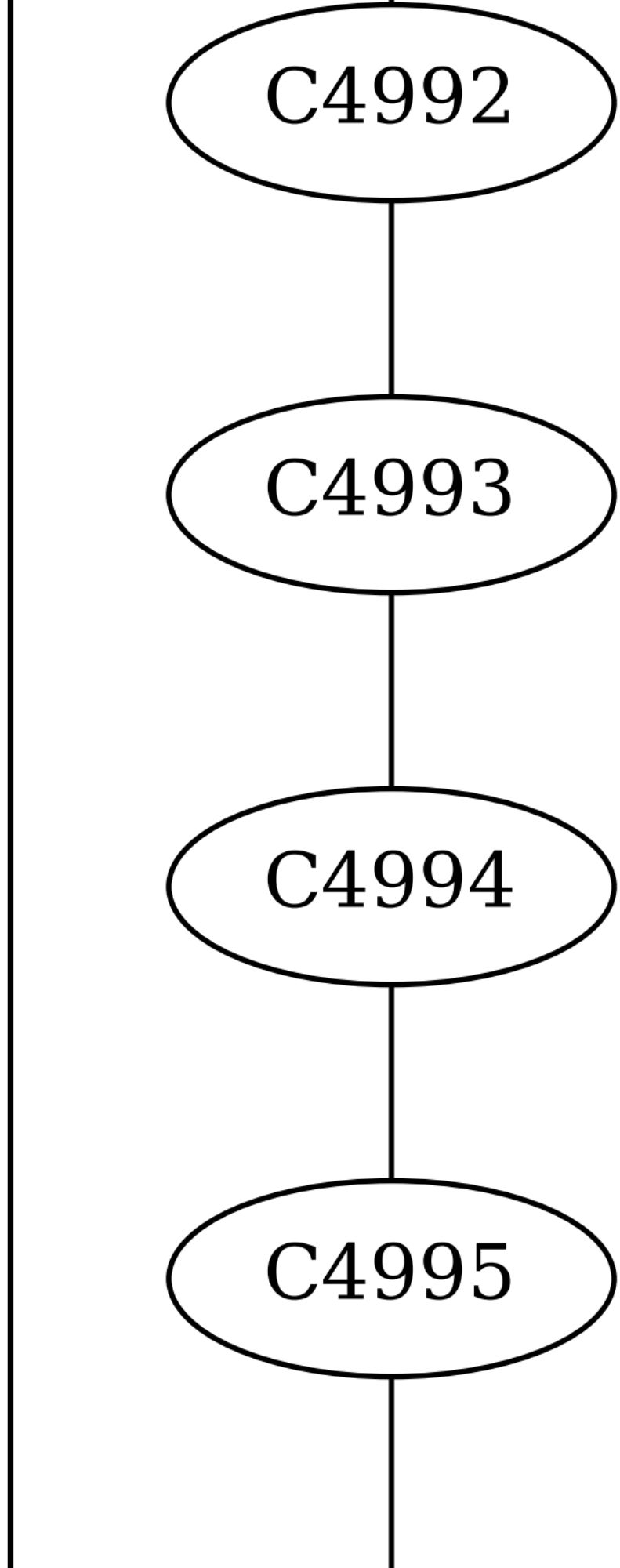
C4992
C4993
C4994
C4995

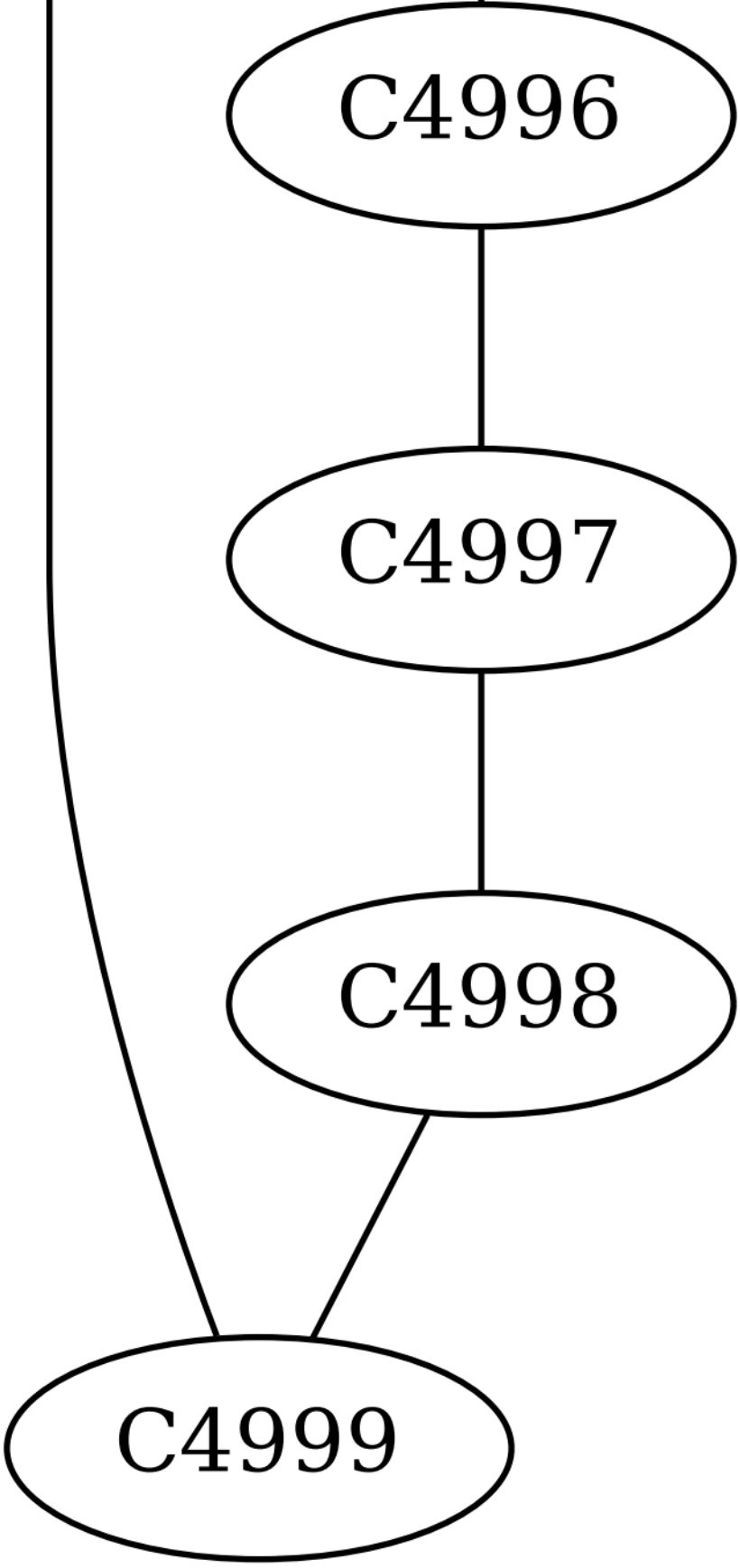
C4996
C4997
C4998
C4999