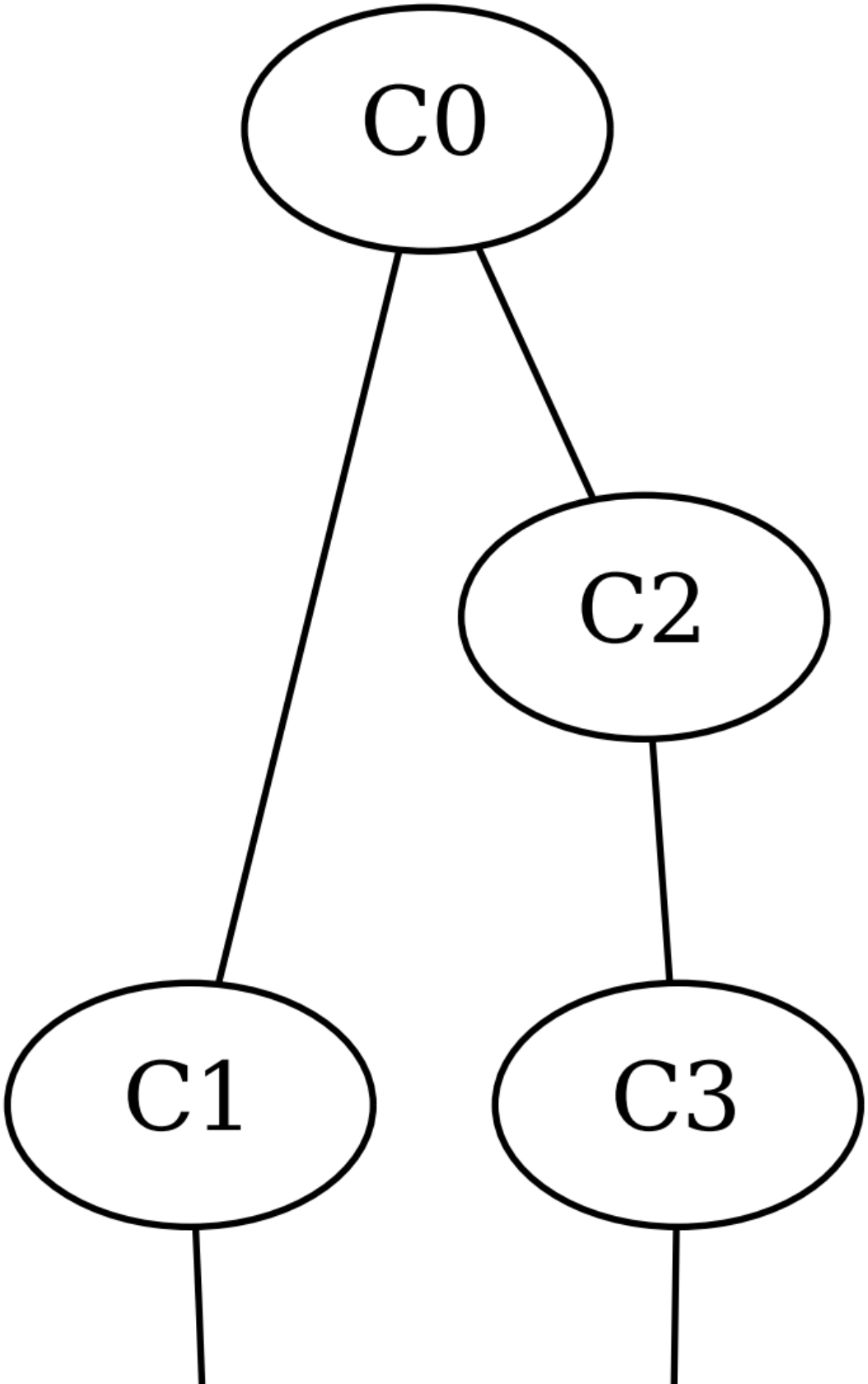
C0
C2
C1
C3

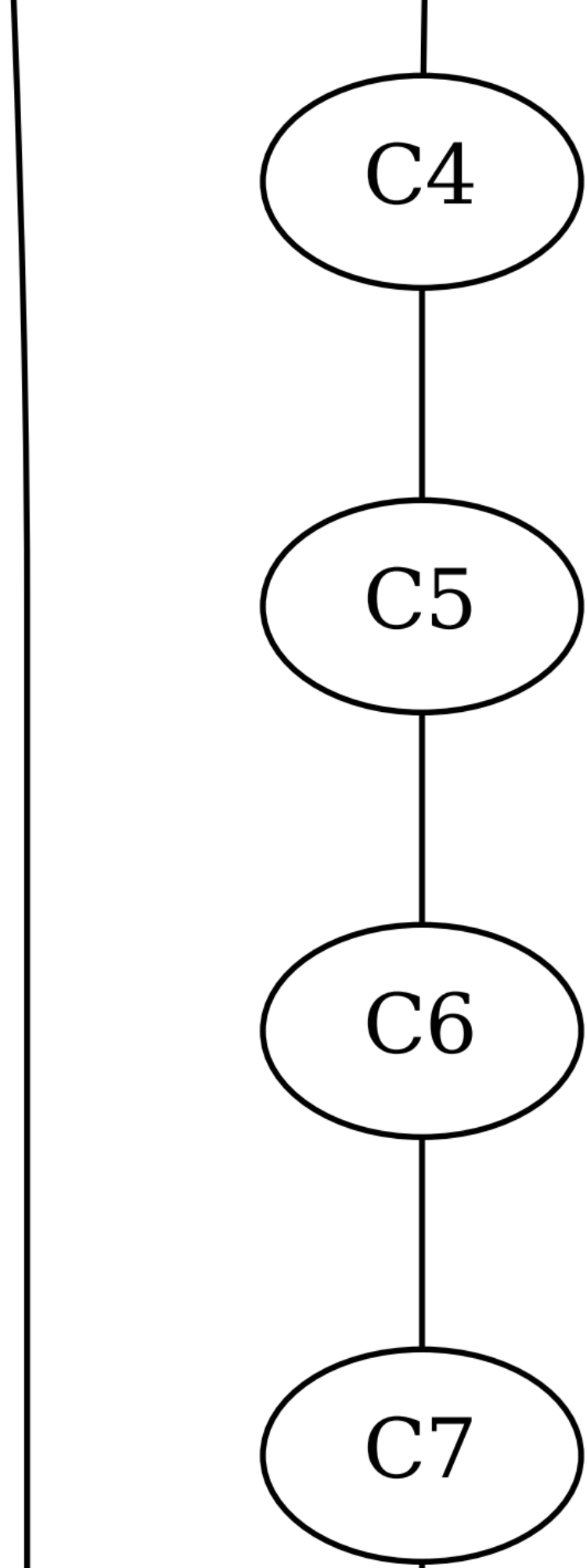
C4
C5
C6
C7

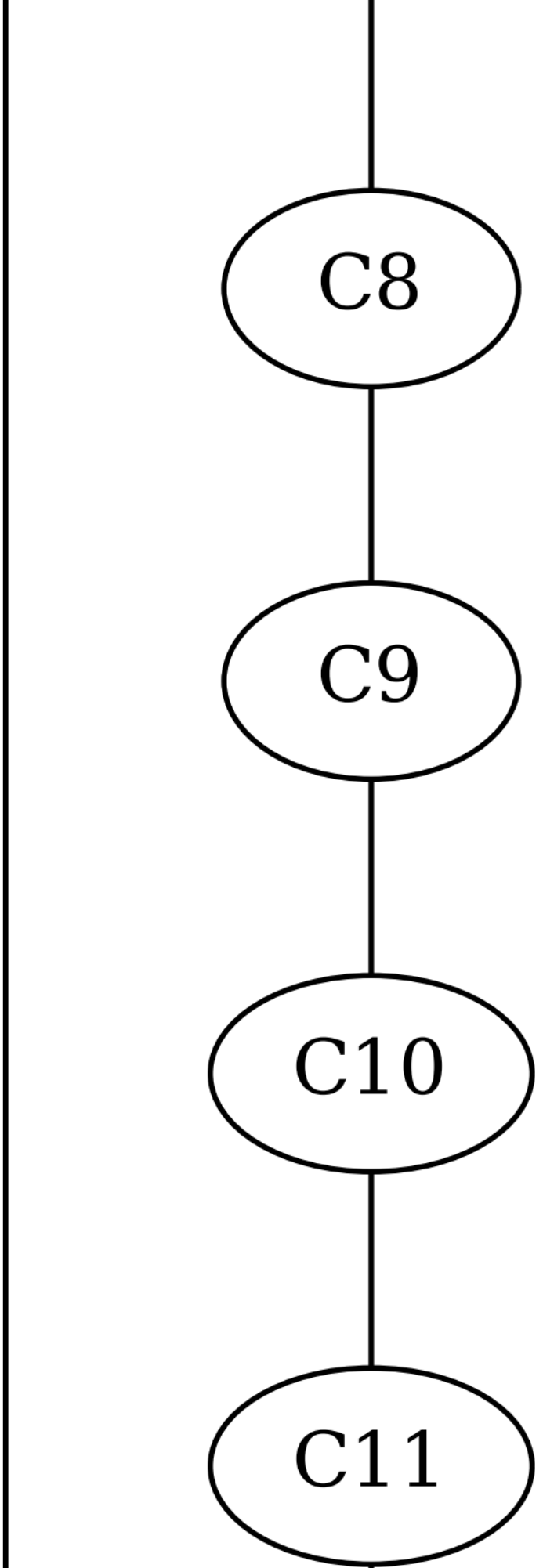
C8
C9
C10
C11

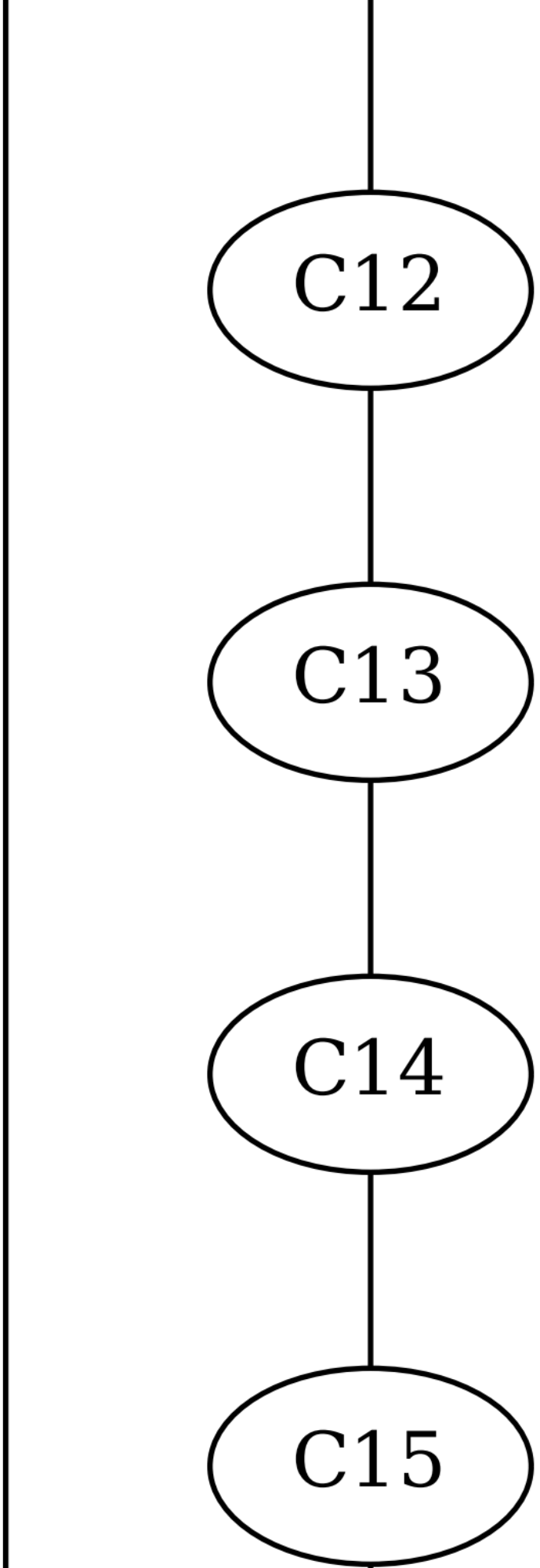
C12
C13
C14
C15

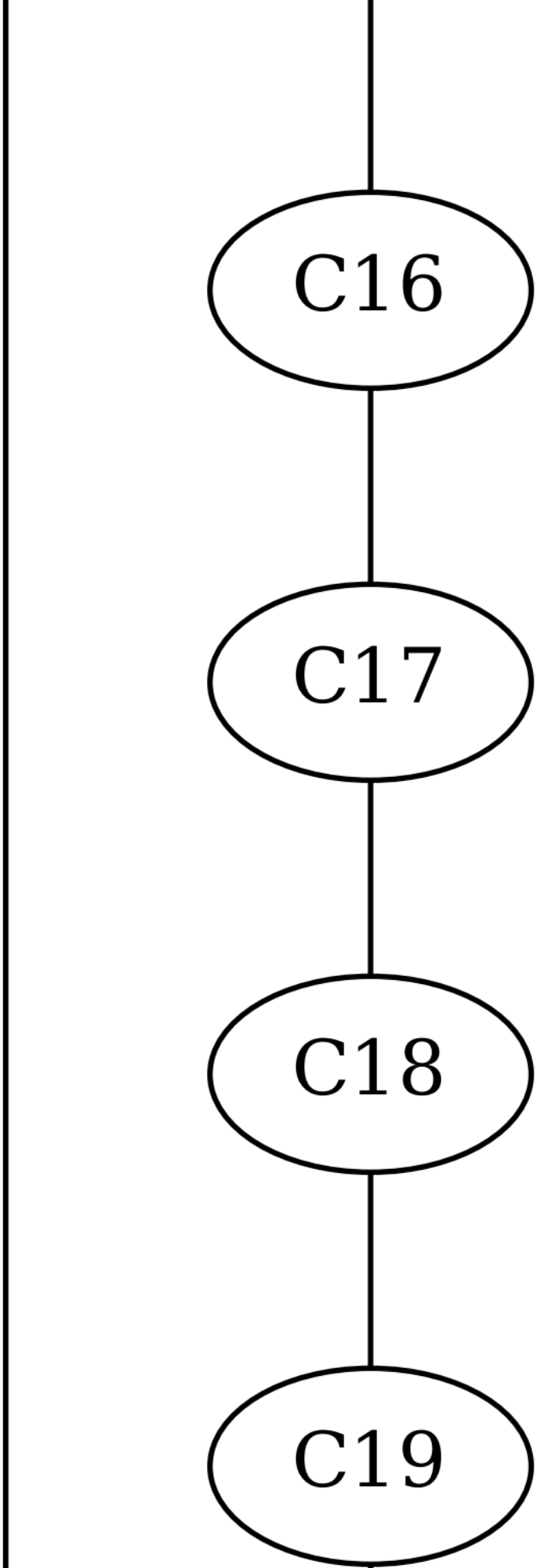
C16
C17
C18
C19

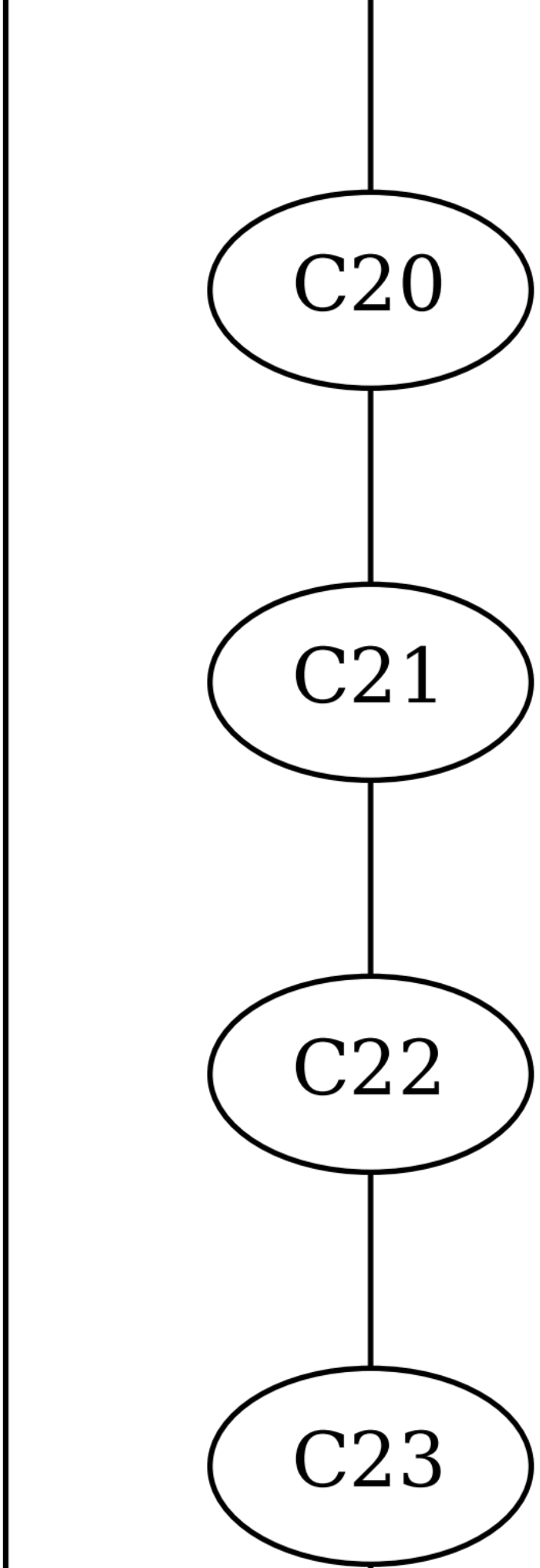
C20
C21
C22
C23

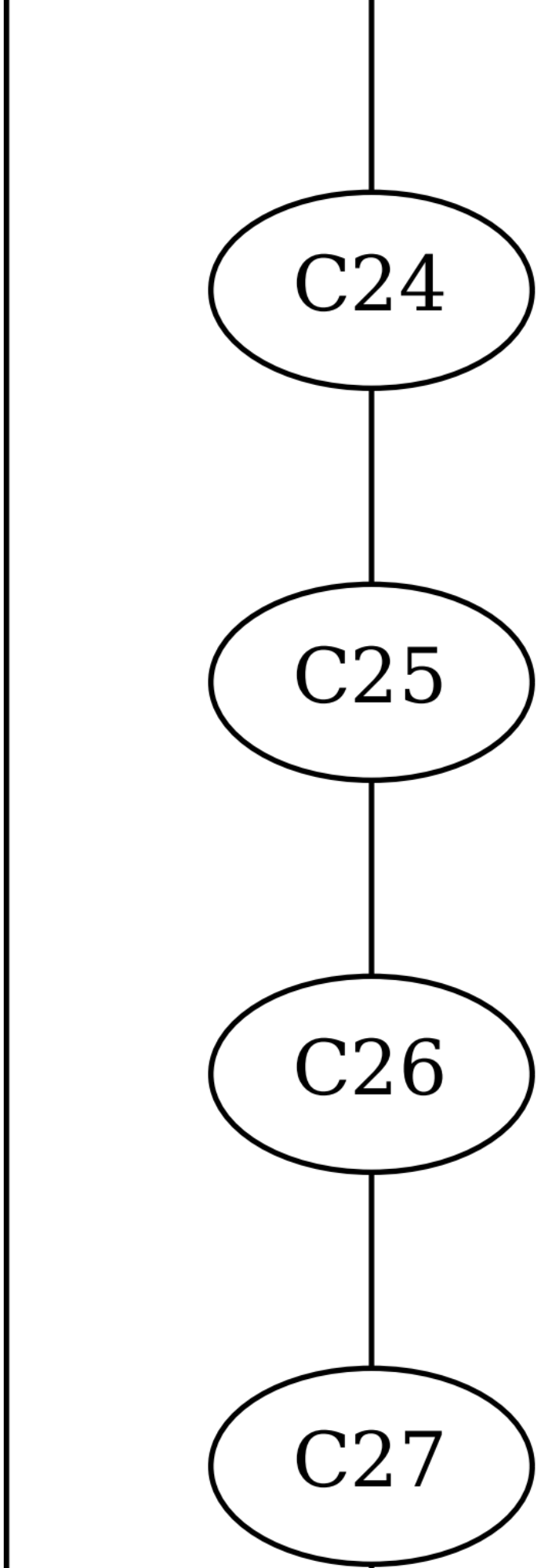
C24
C25
C26
C27

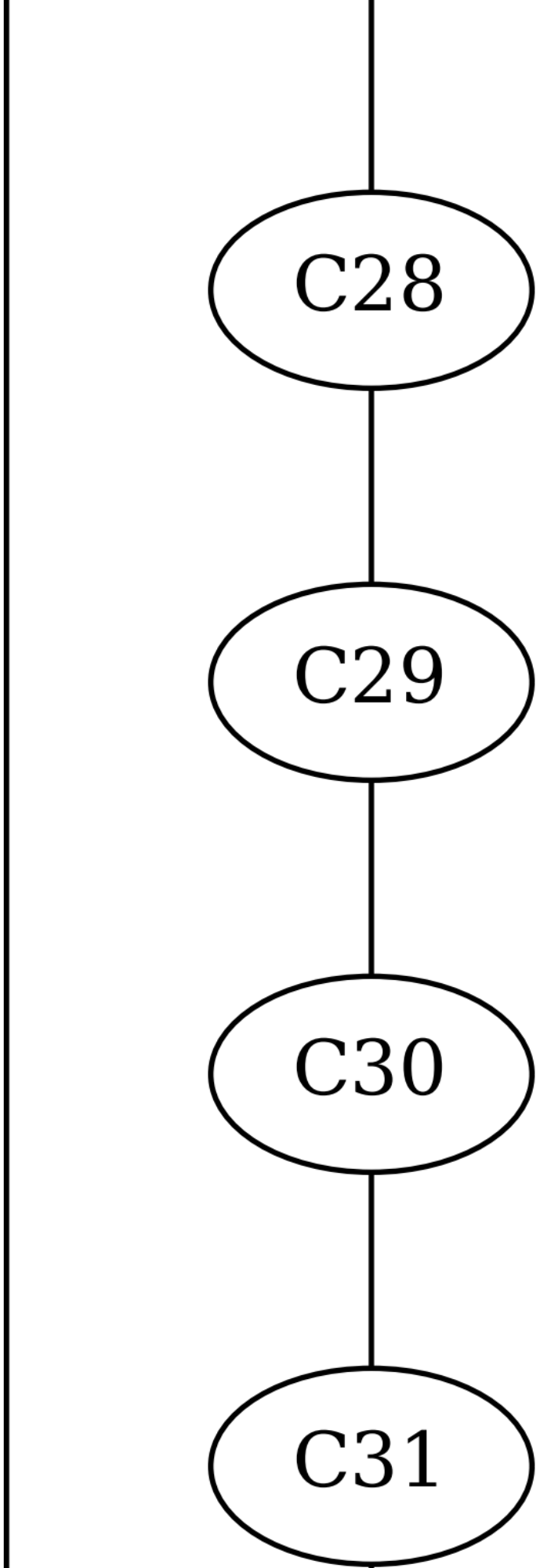
C28
C29
C30
C31

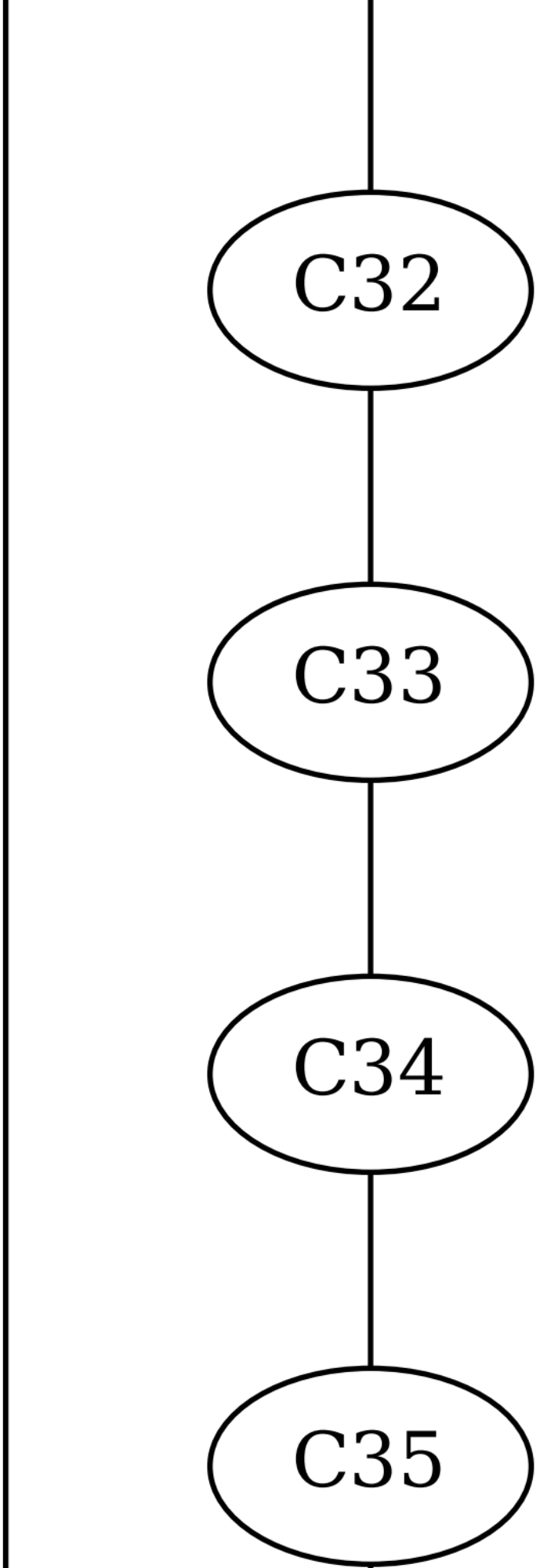
C32
C33
C34
C35

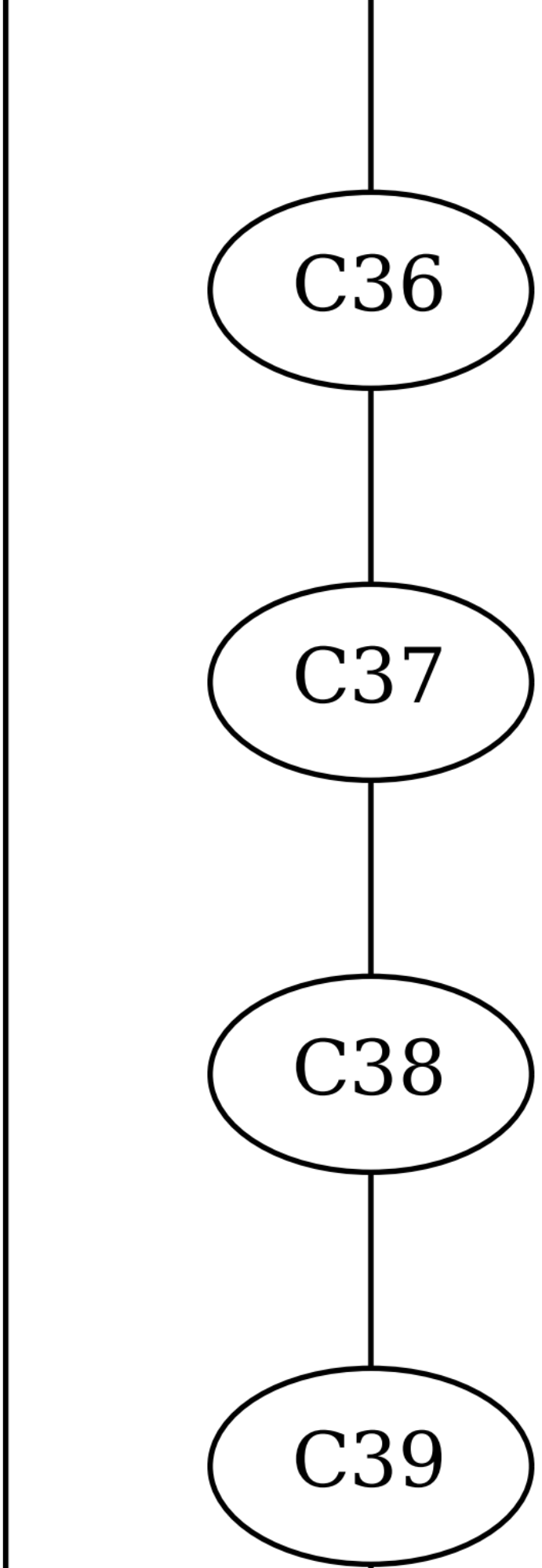
C36
C37
C38
C39

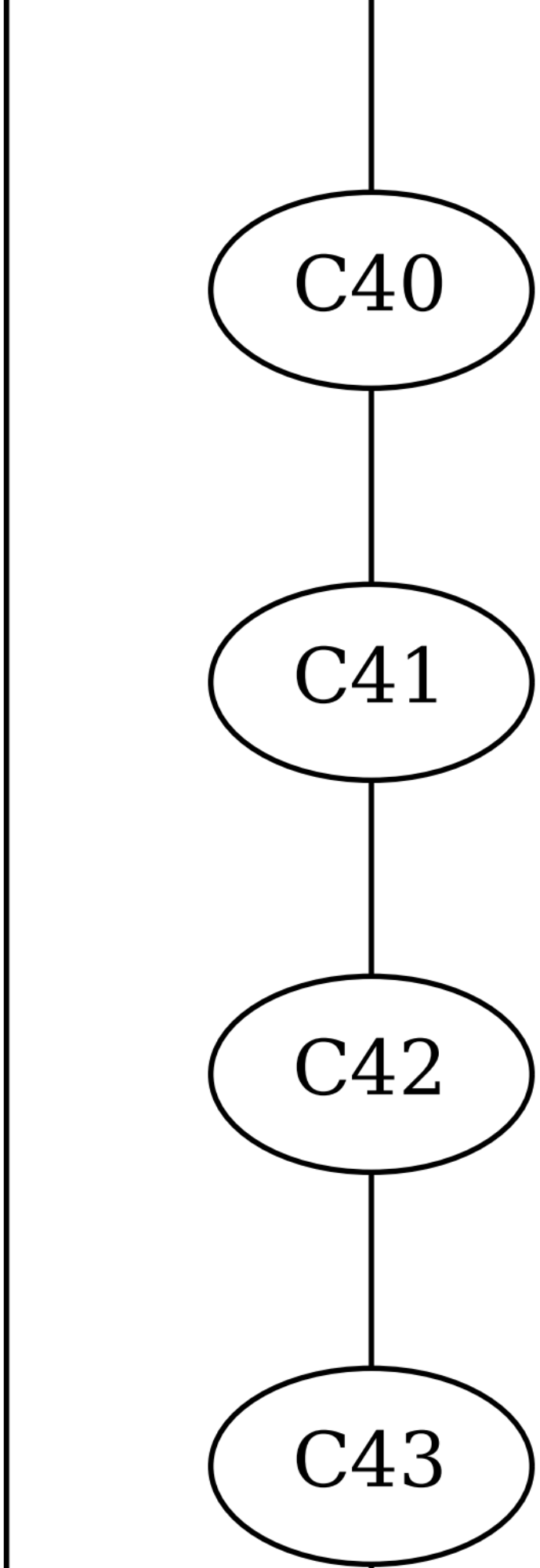
C40
C41
C42
C43

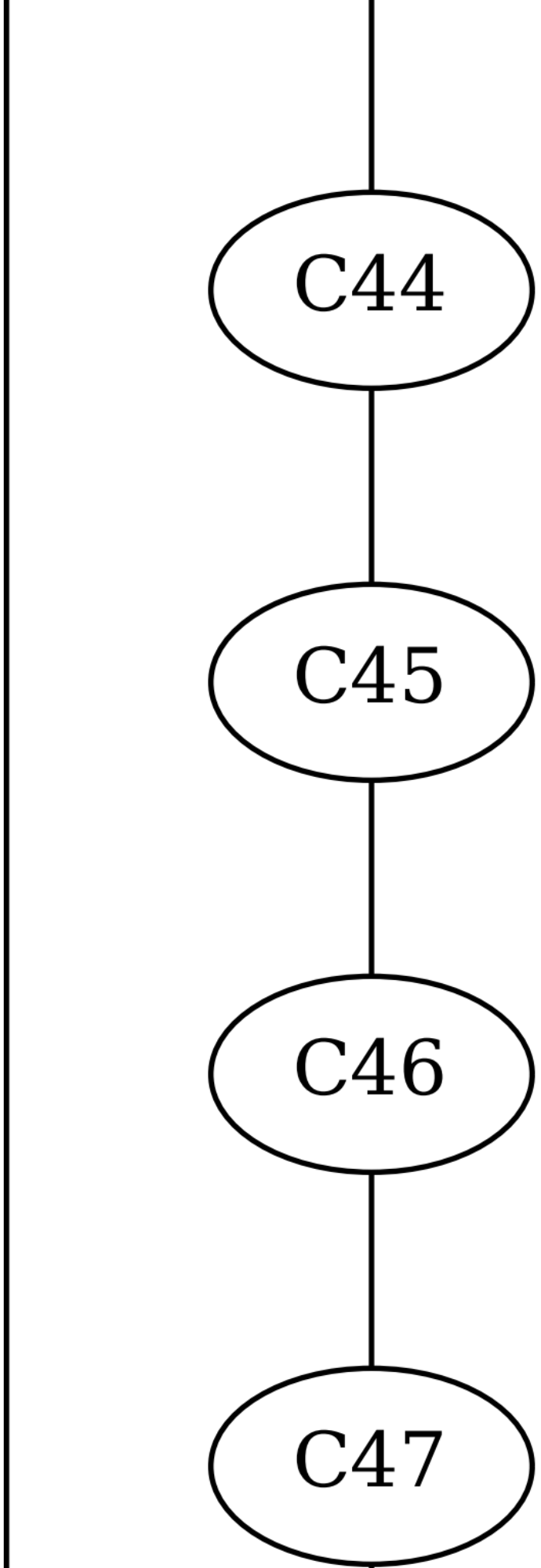
C44
C45
C46
C47

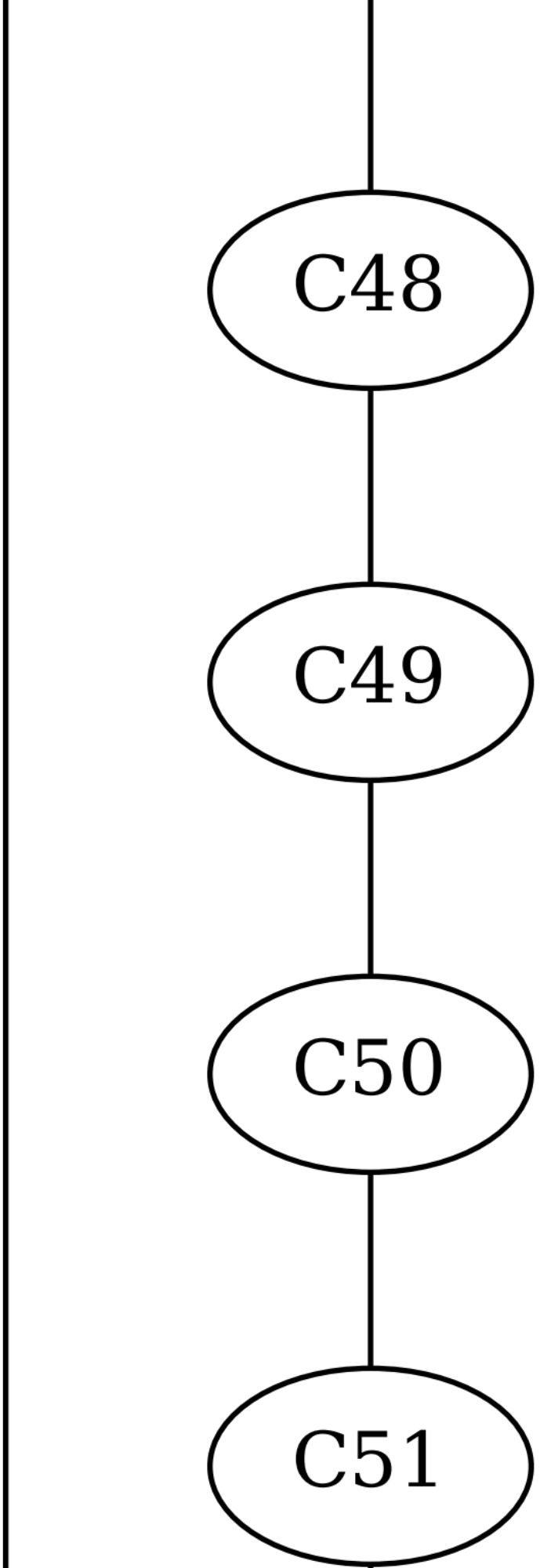
C48
C49
C50
C51

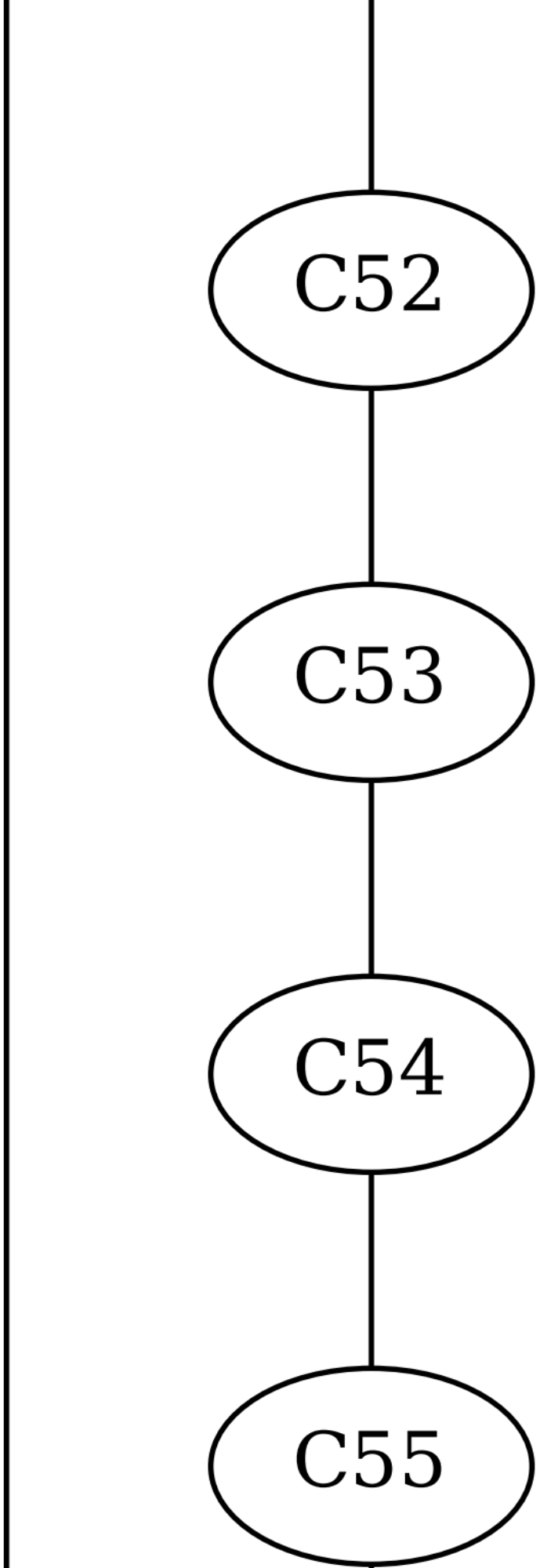
C52
C53
C54
C55

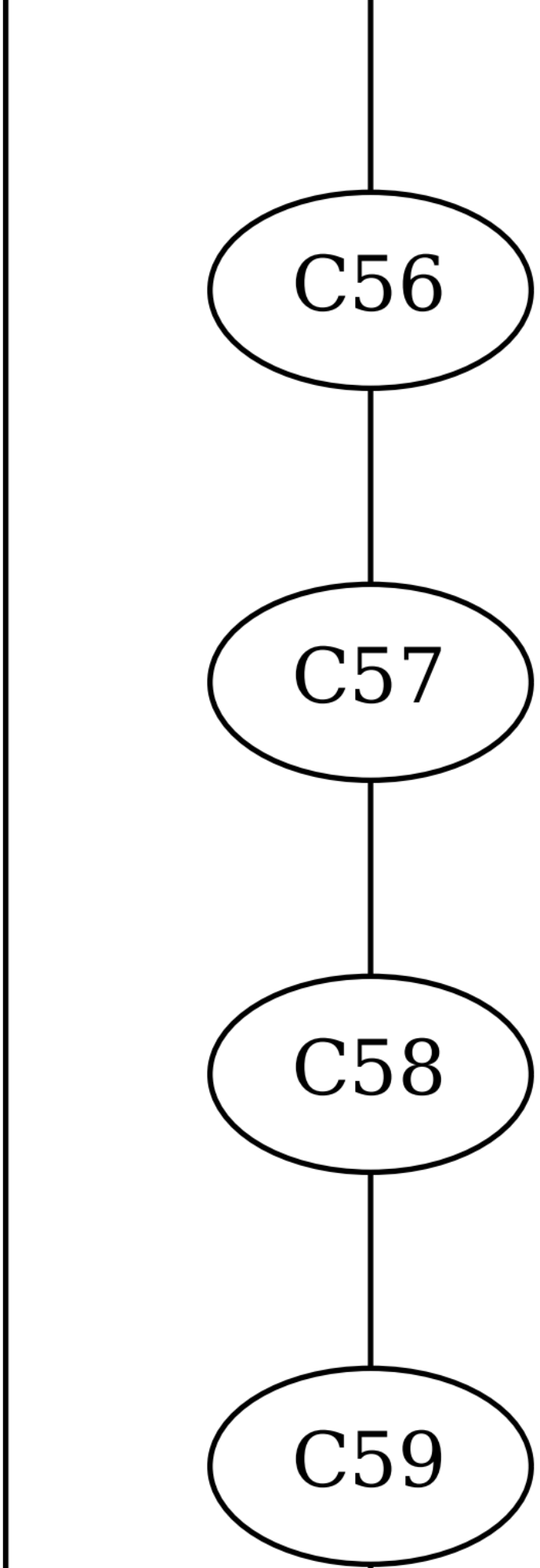
C56
C57
C58
C59

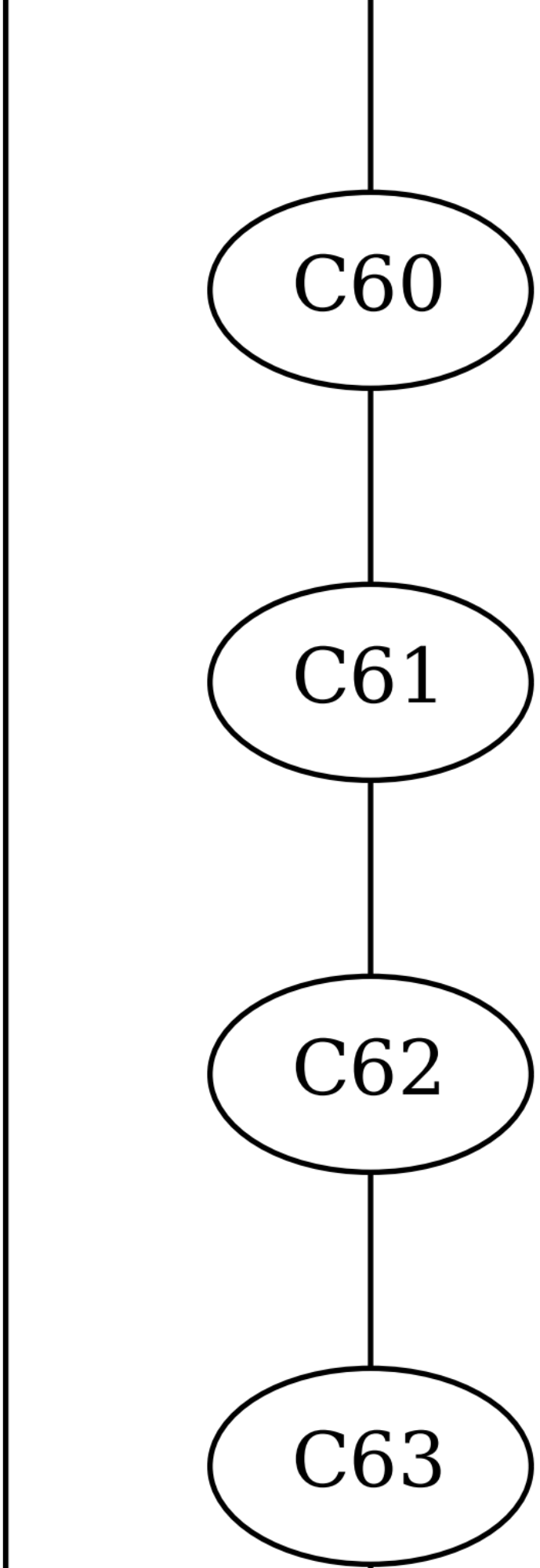
C60
C61
C62
C63

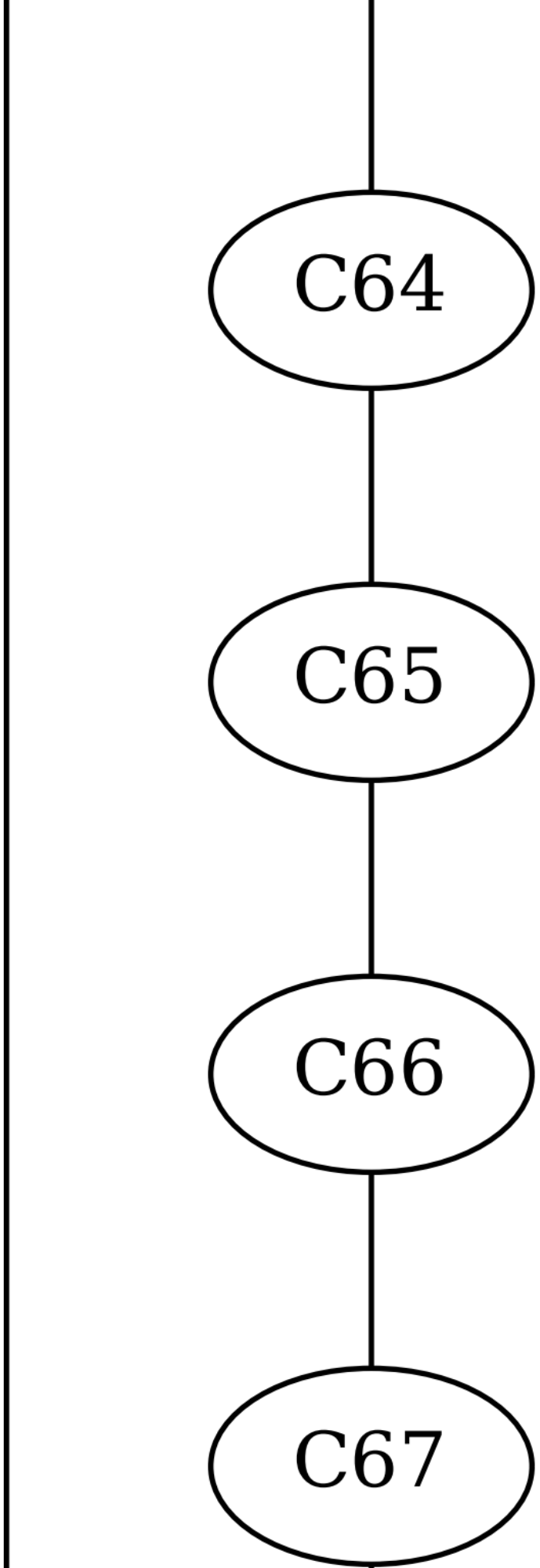
C64
C65
C66
C67

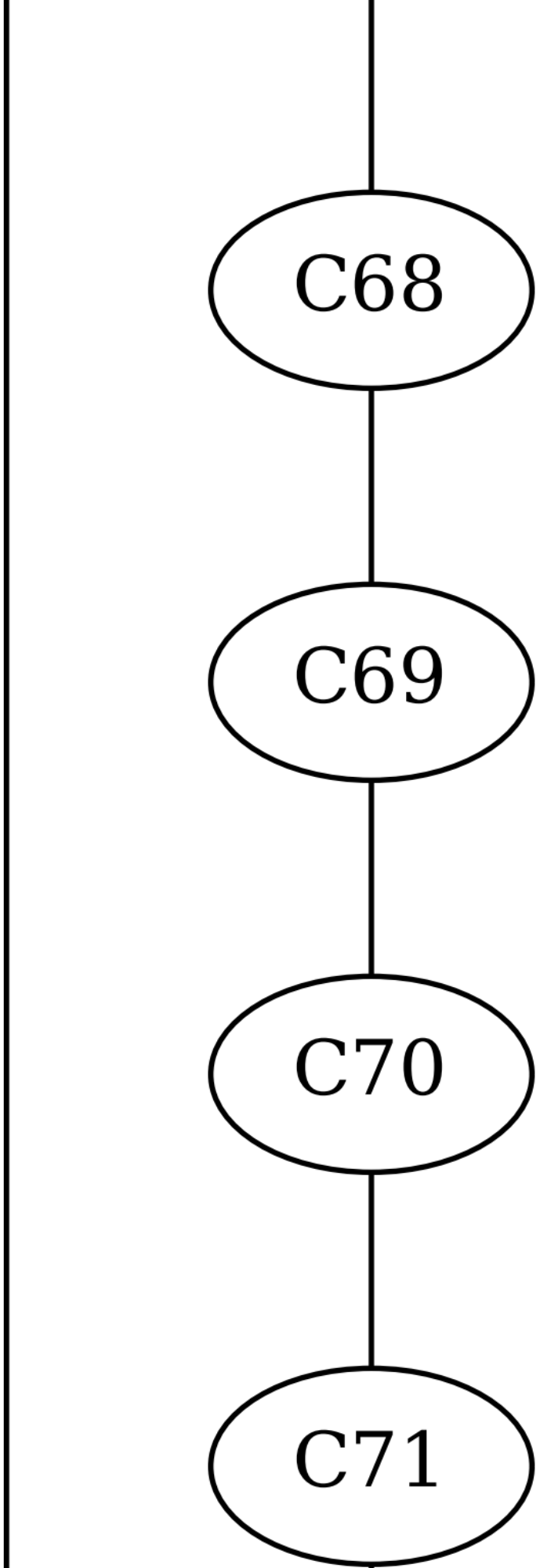
C68
C69
C70
C71

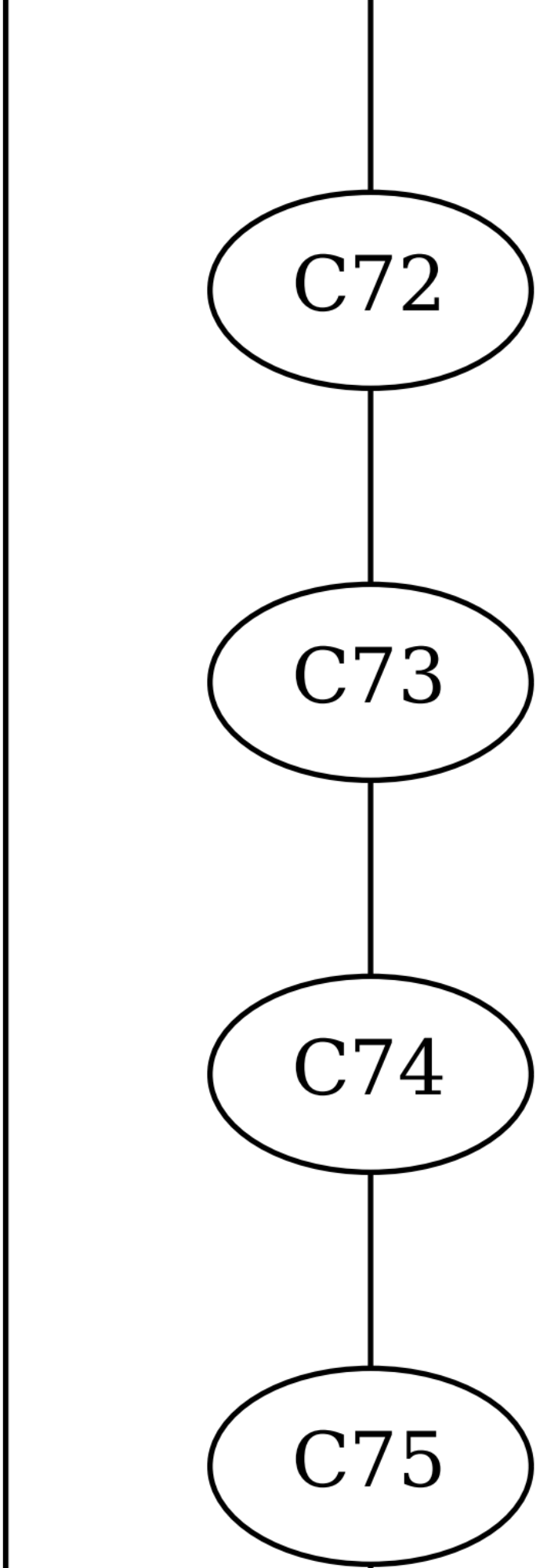
C72
C73
C74
C75

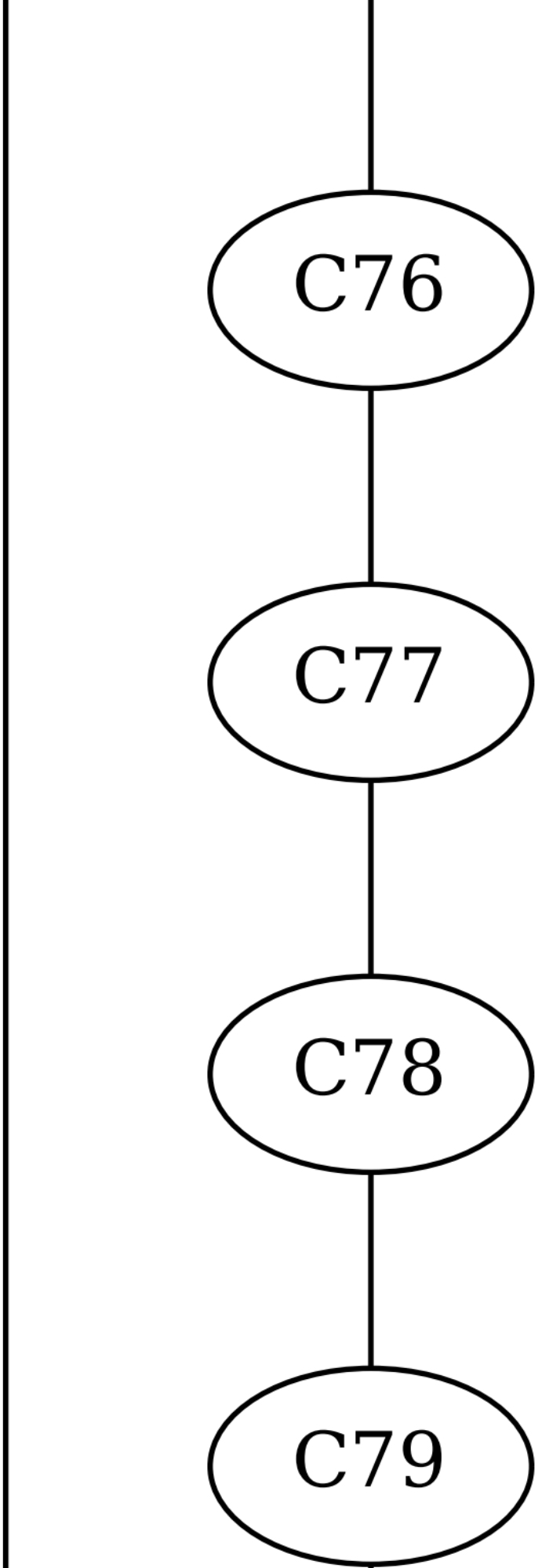
C76
C77
C78
C79

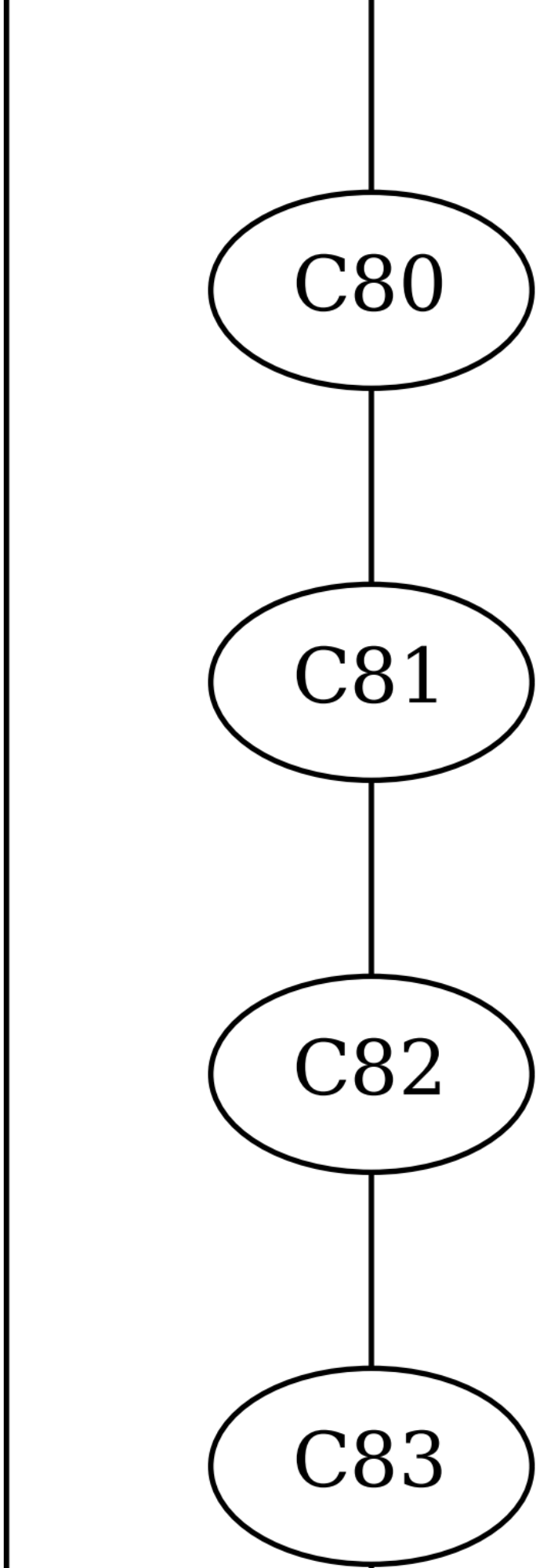
C80
C81
C82
C83

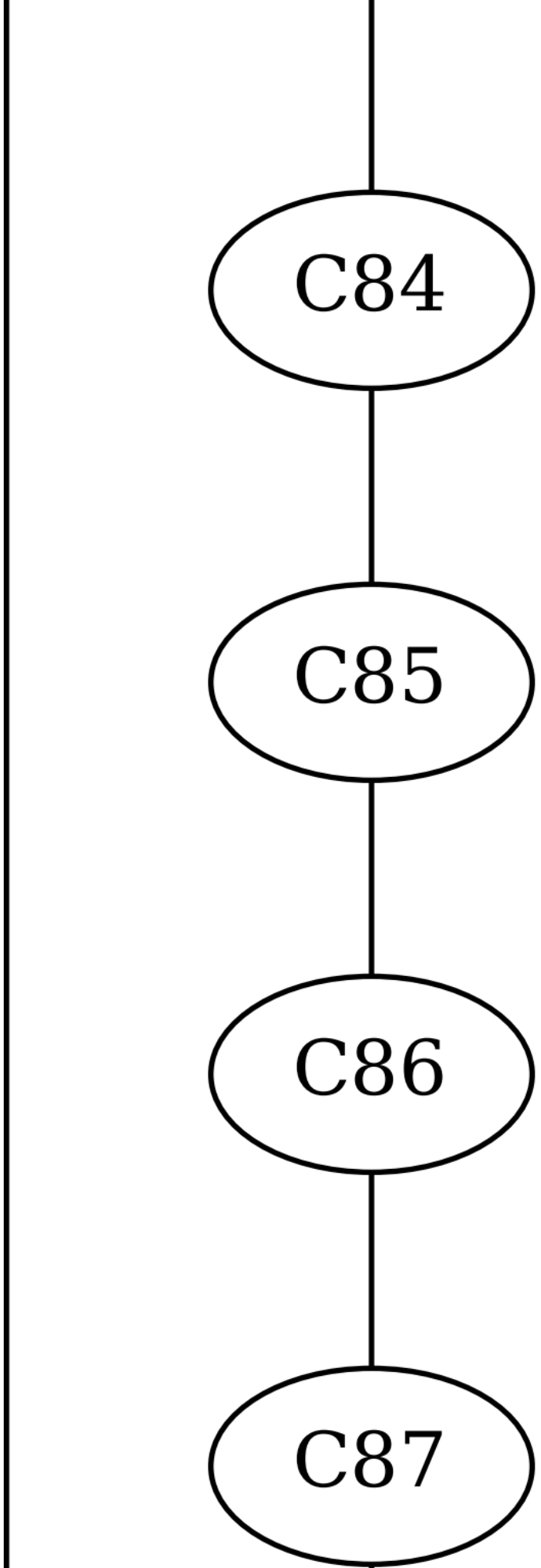
C84
C85
C86
C87

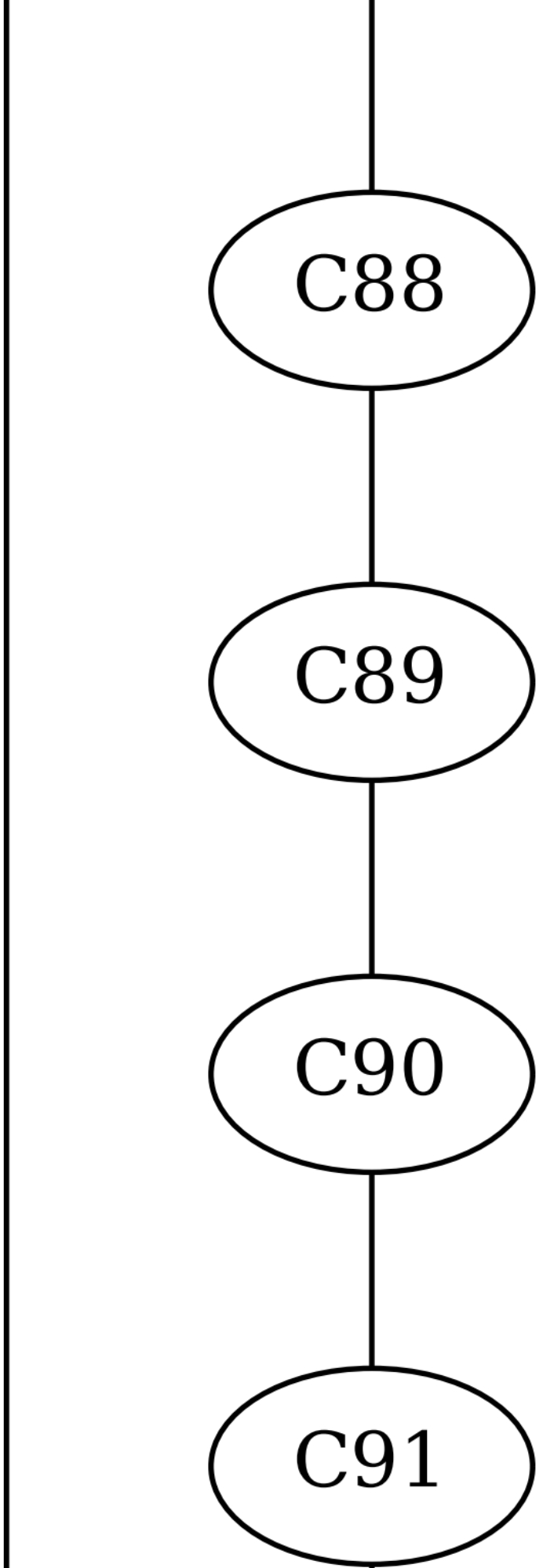
C88
C89
C90
C91

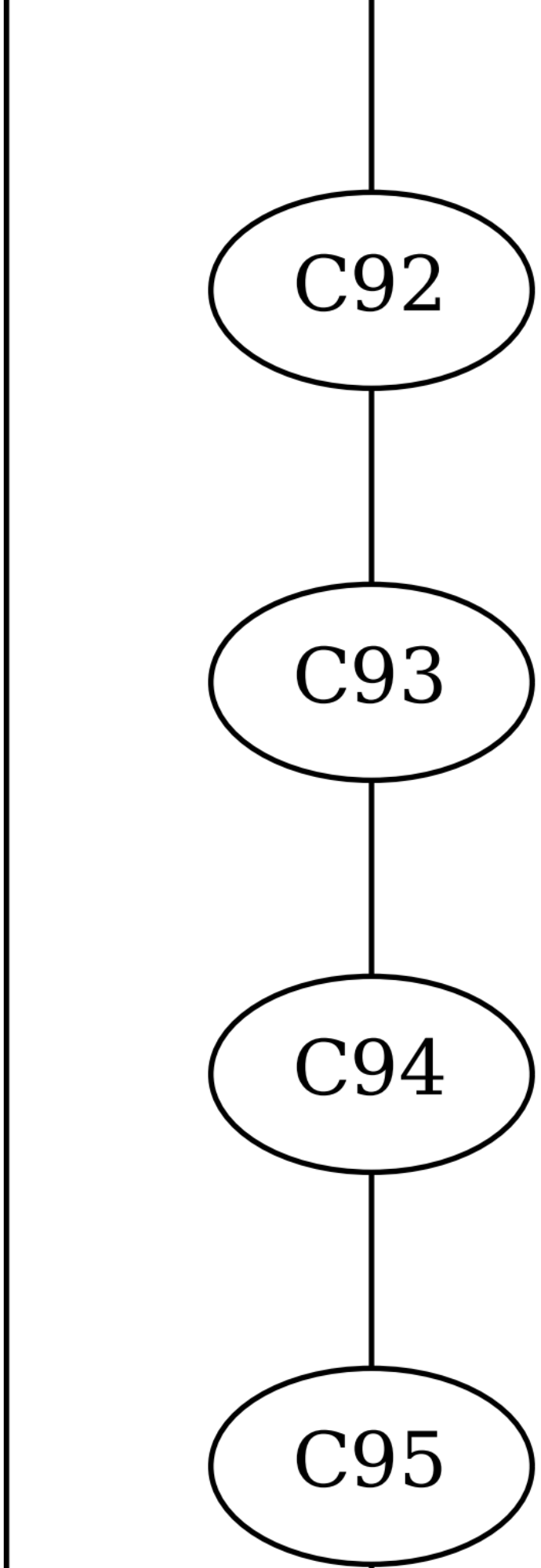
C92
C93
C94
C95

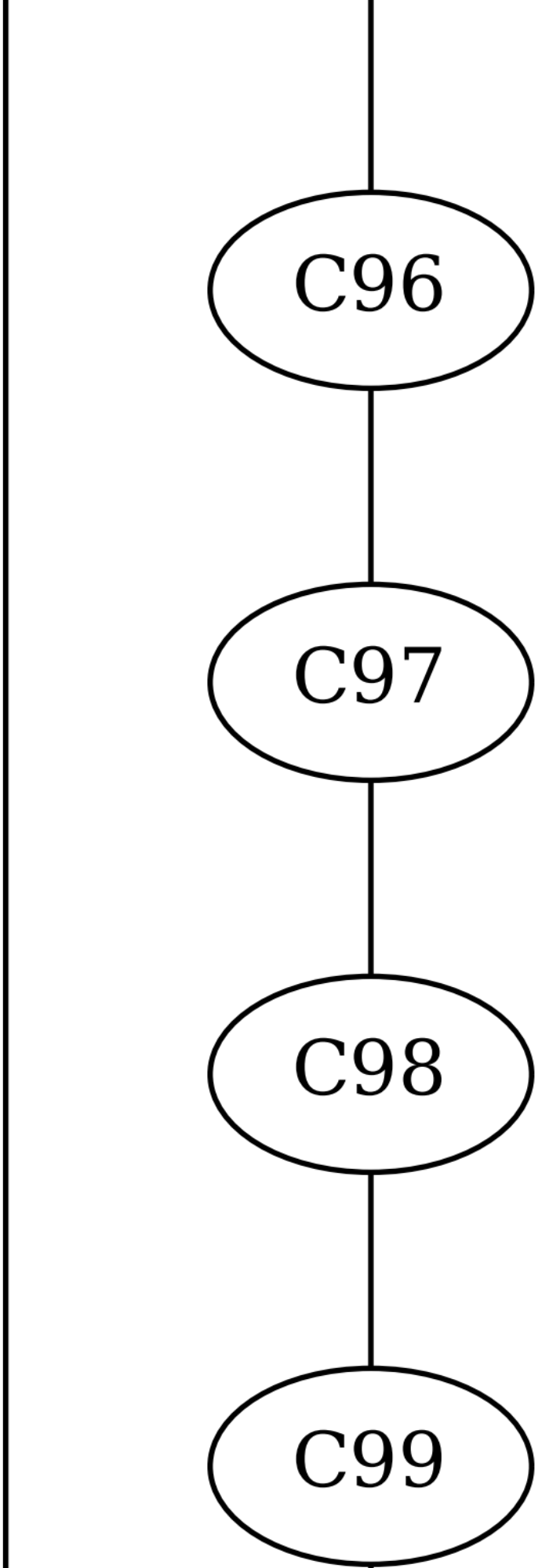
C96
C97
C98
C99

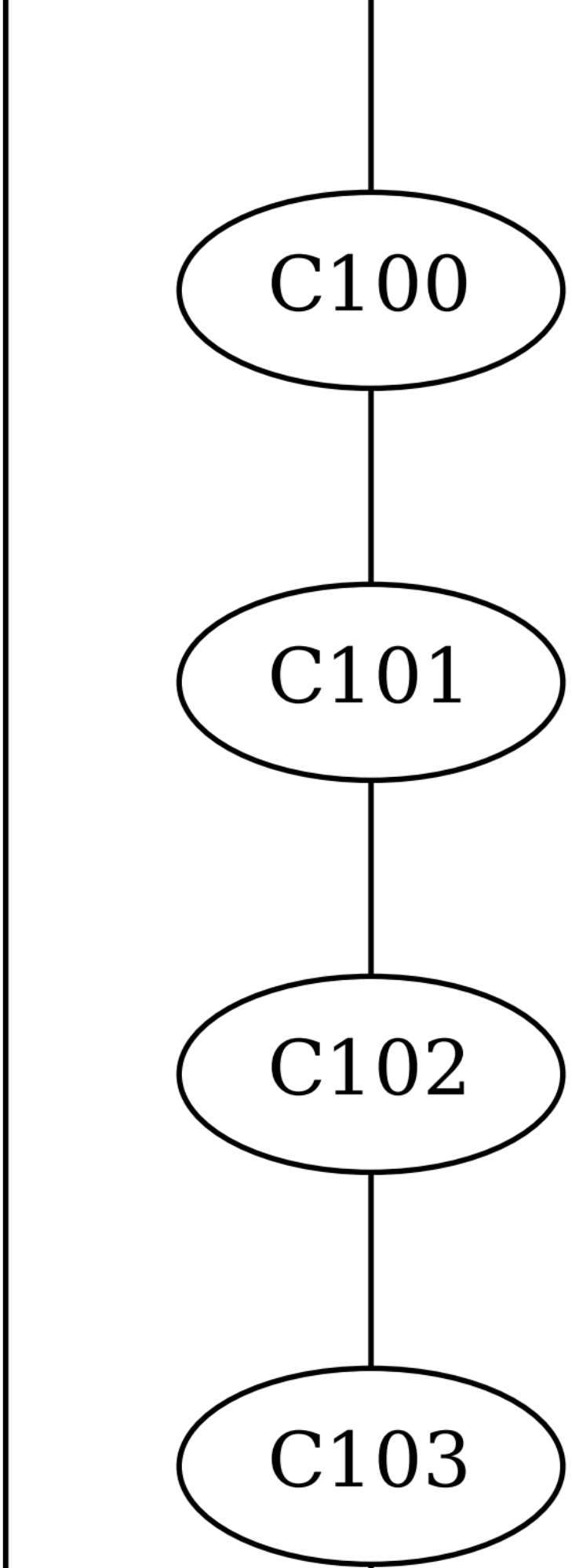
C100
C101
C102
C103

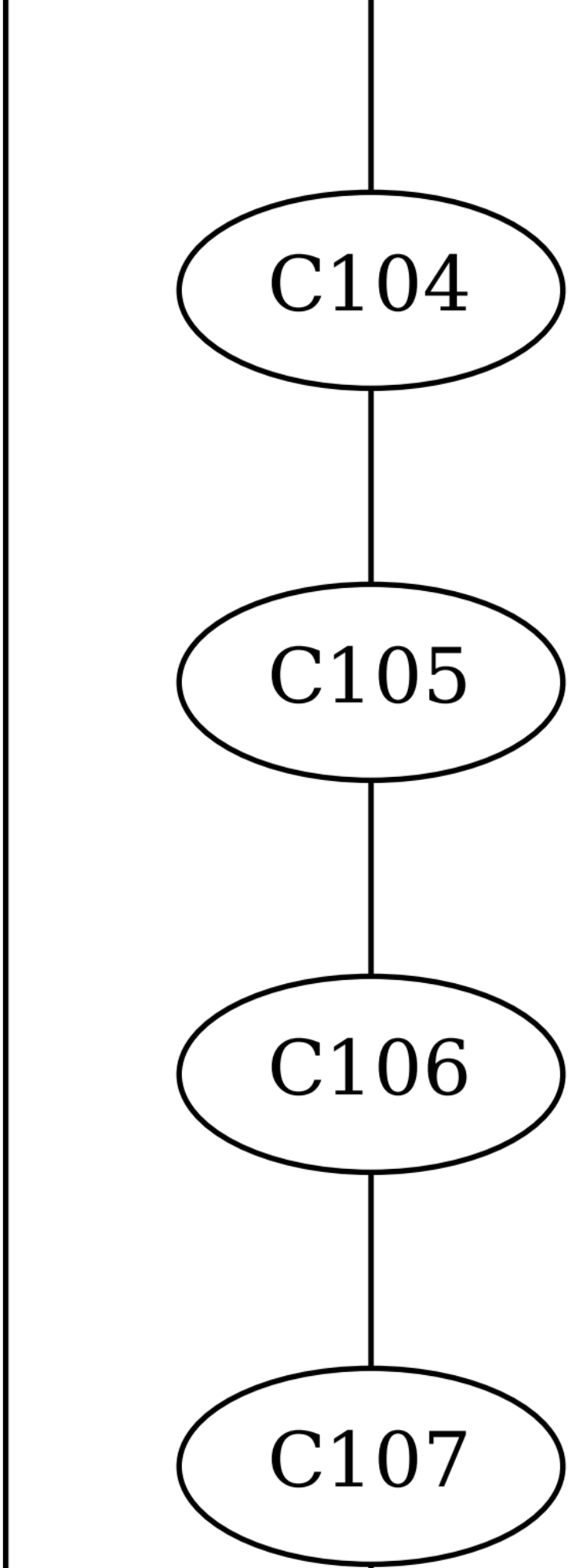
C104
C105
C106
C107

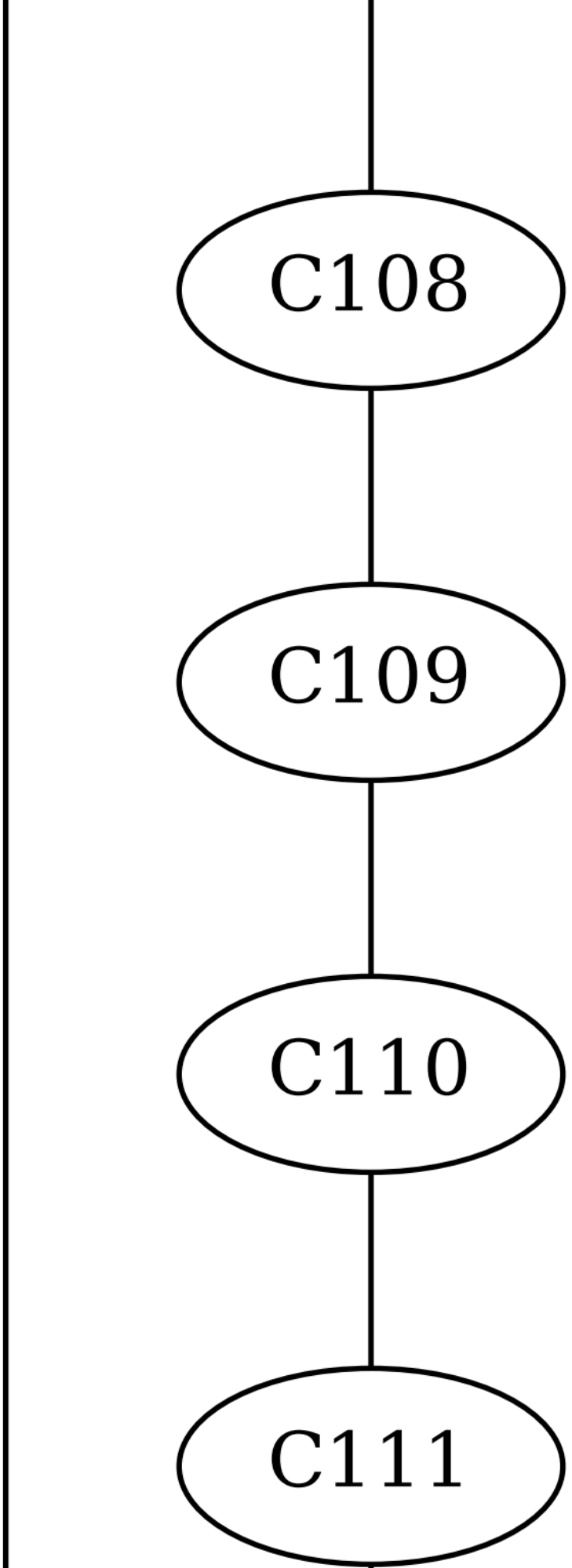
C108
C109
C110
C111

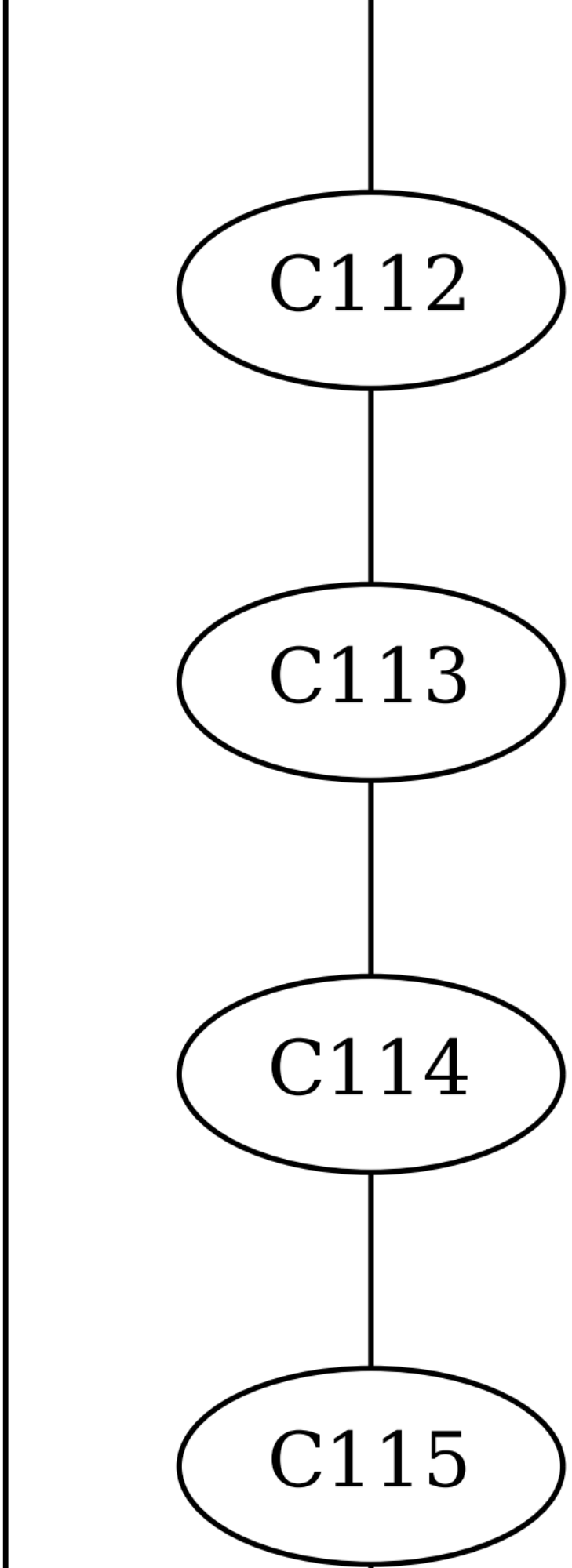
C112
C113
C114
C115

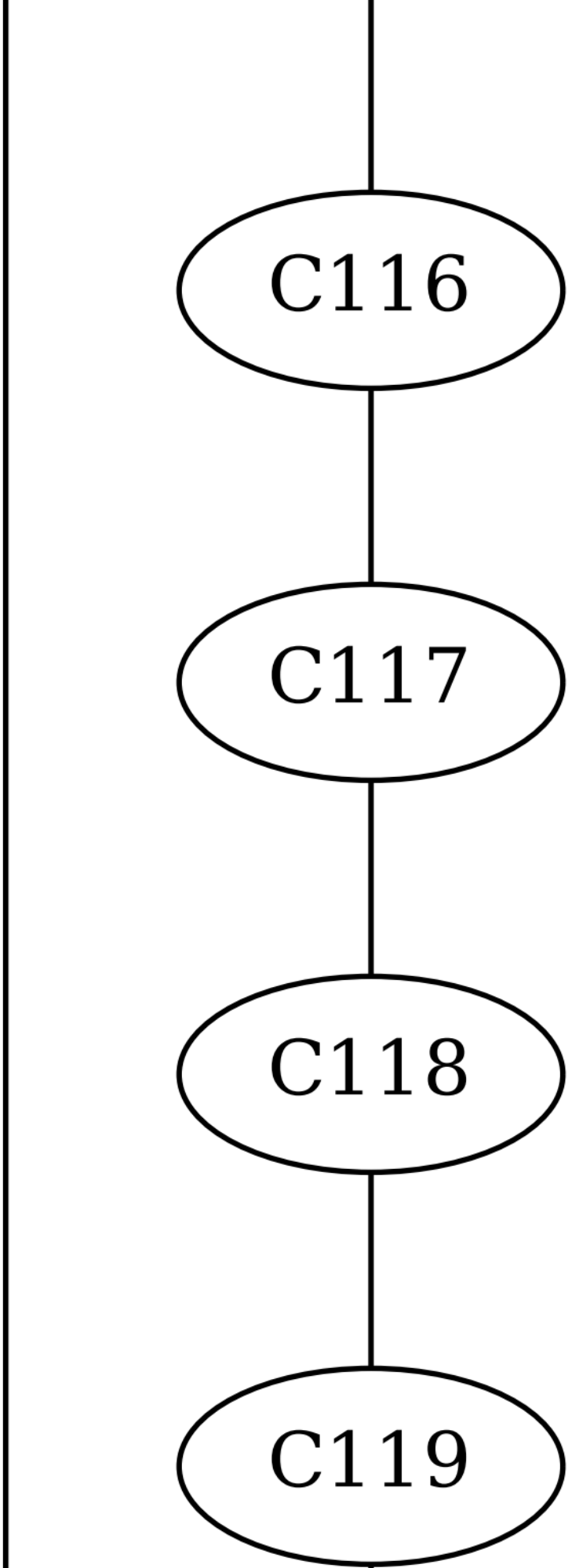
C116
C117
C118
C119

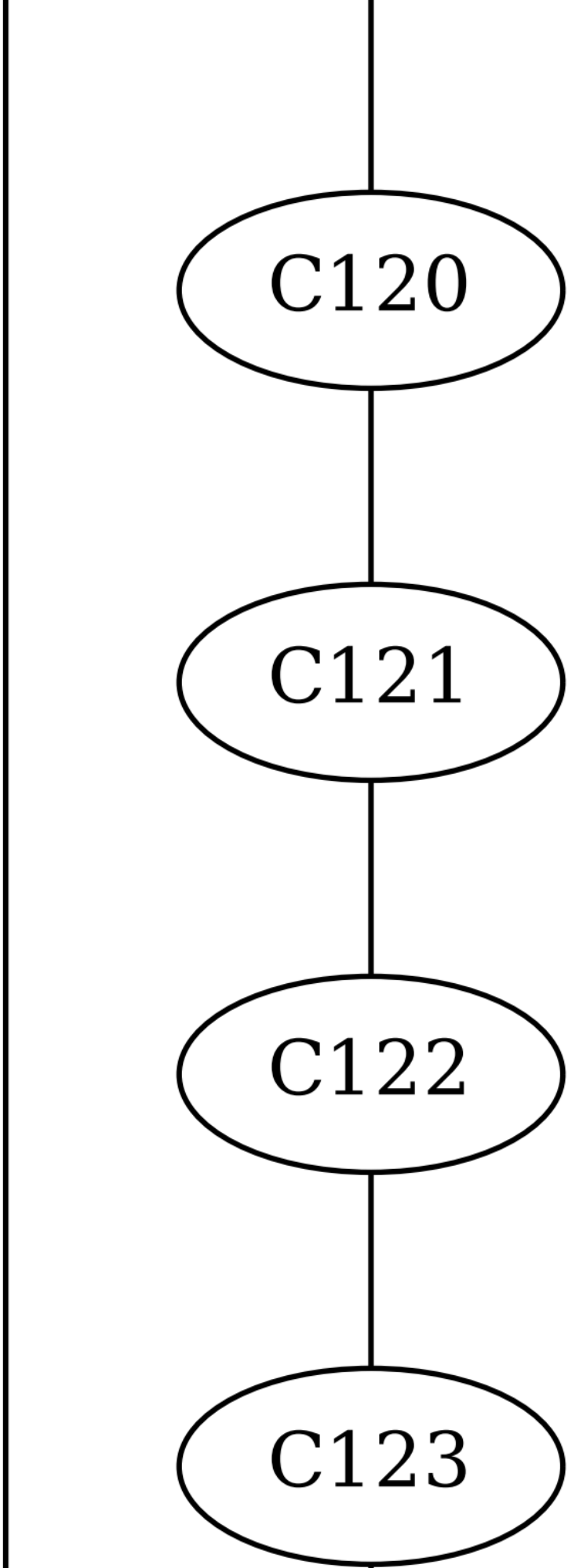
C120
C121
C122
C123

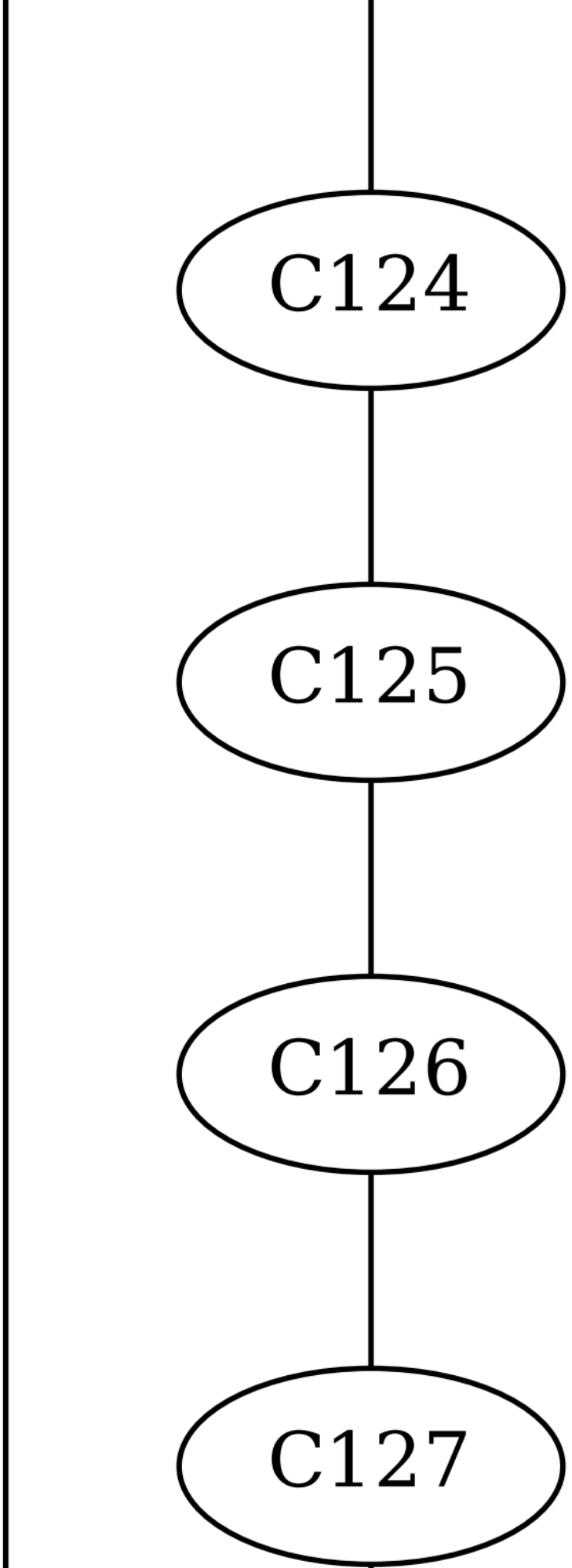
C124
C125
C126
C127

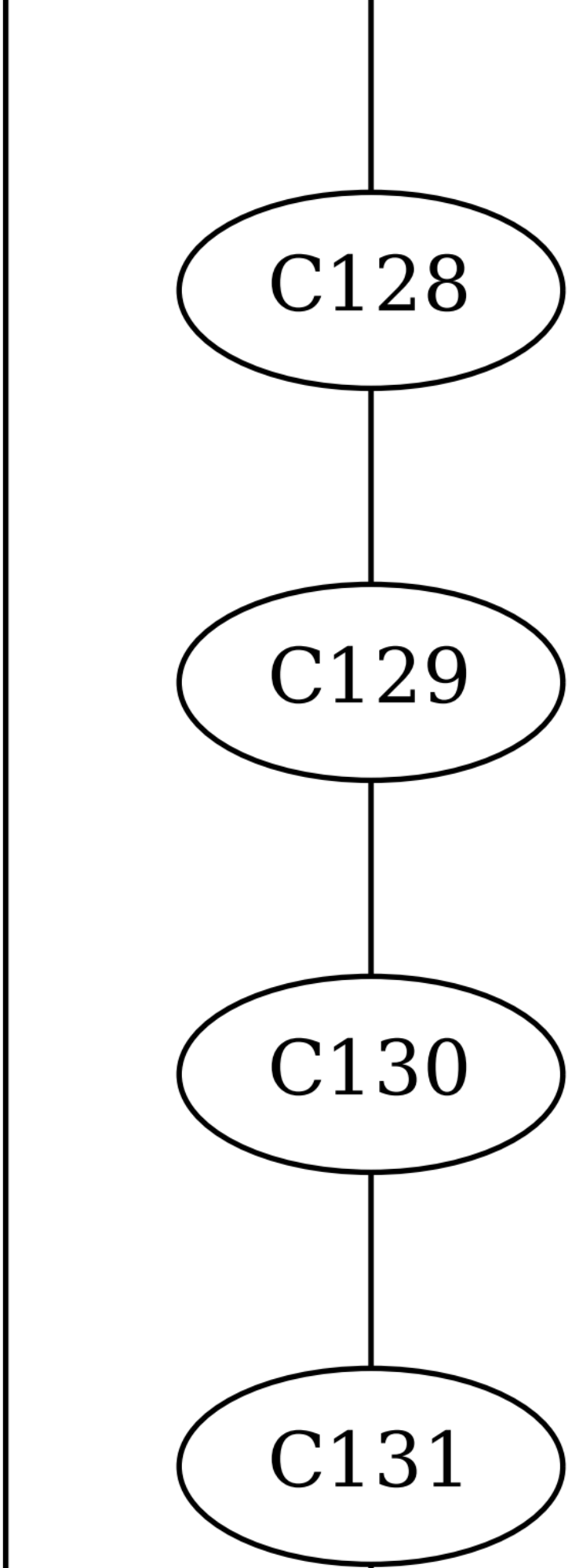
C128
C129
C130
C131

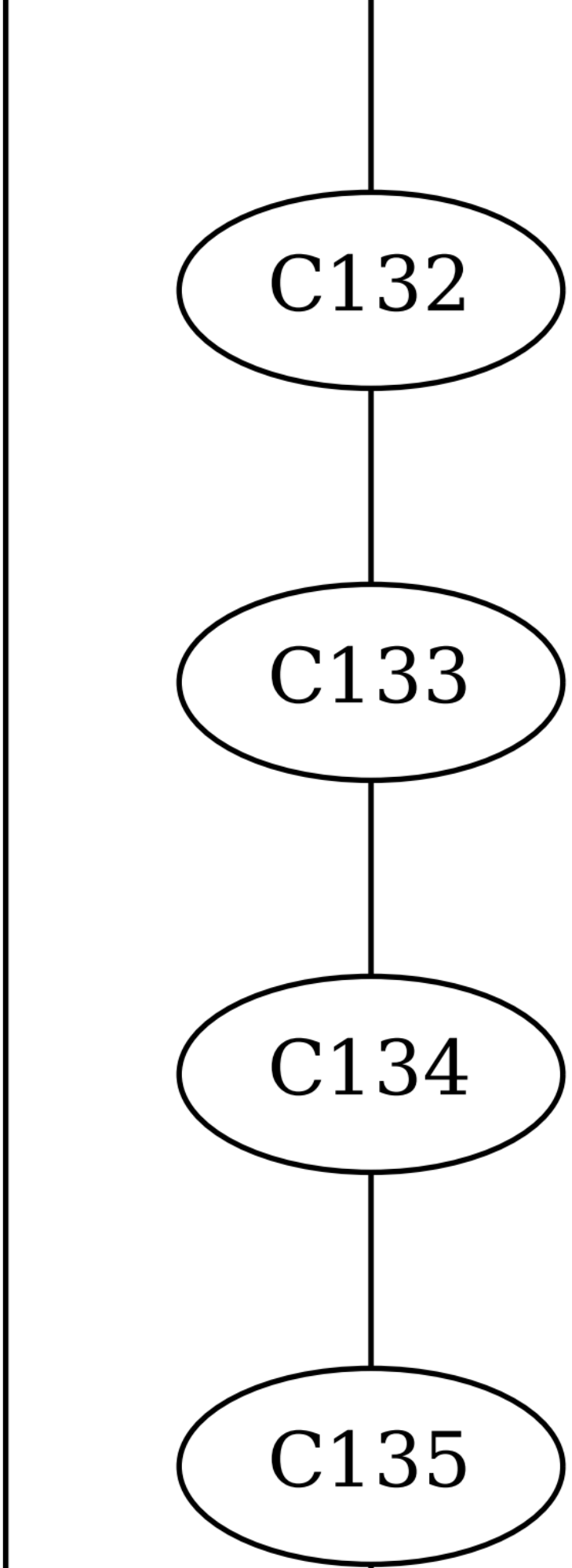
C132
C133
C134
C135

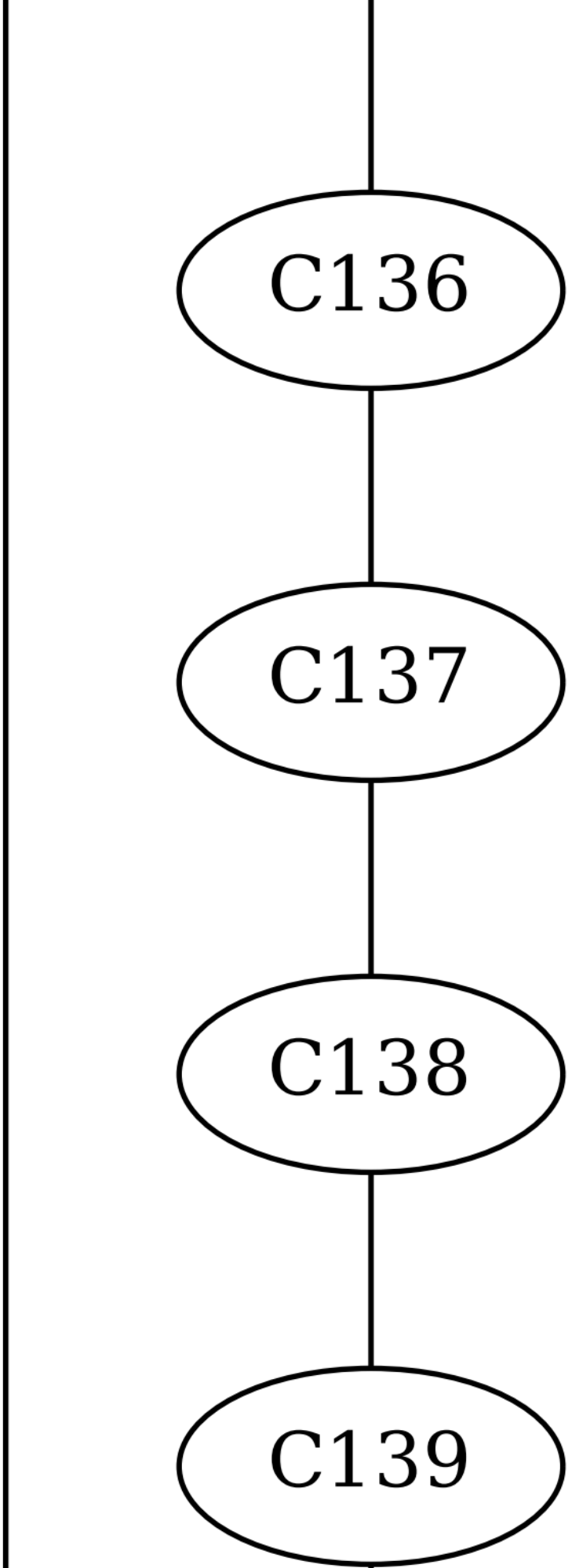
C136
C137
C138
C139

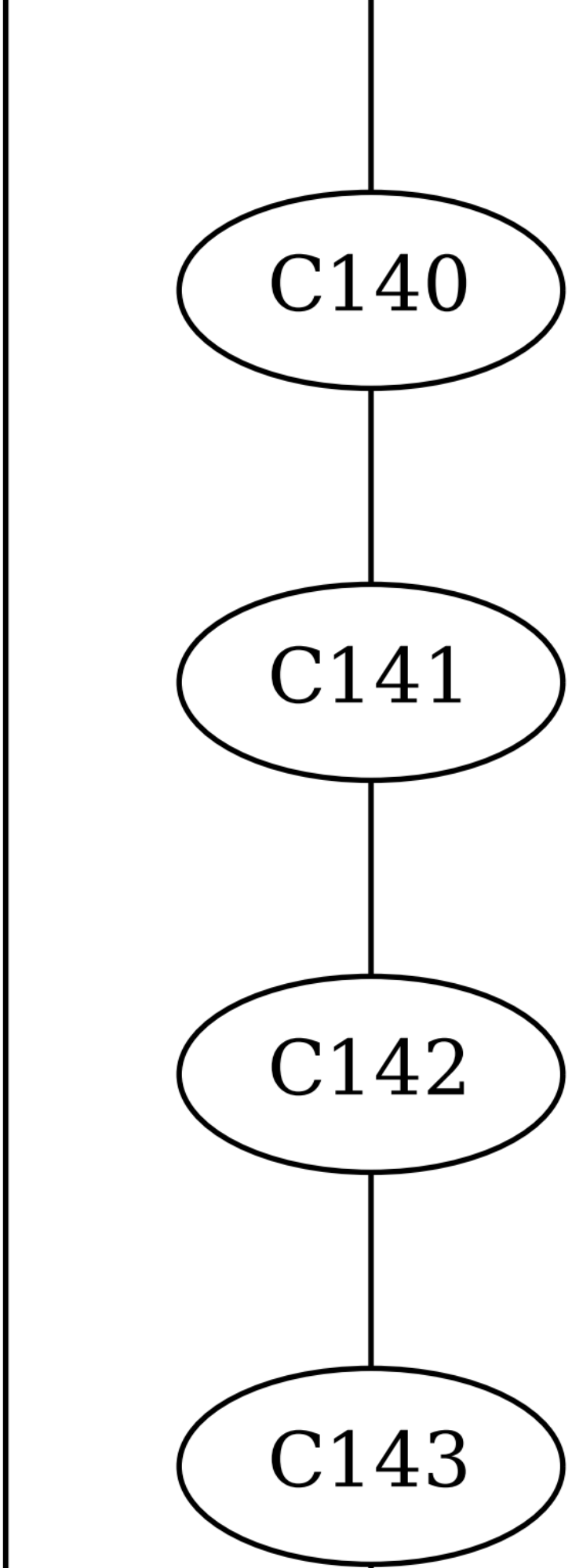
C140
C141
C142
C143

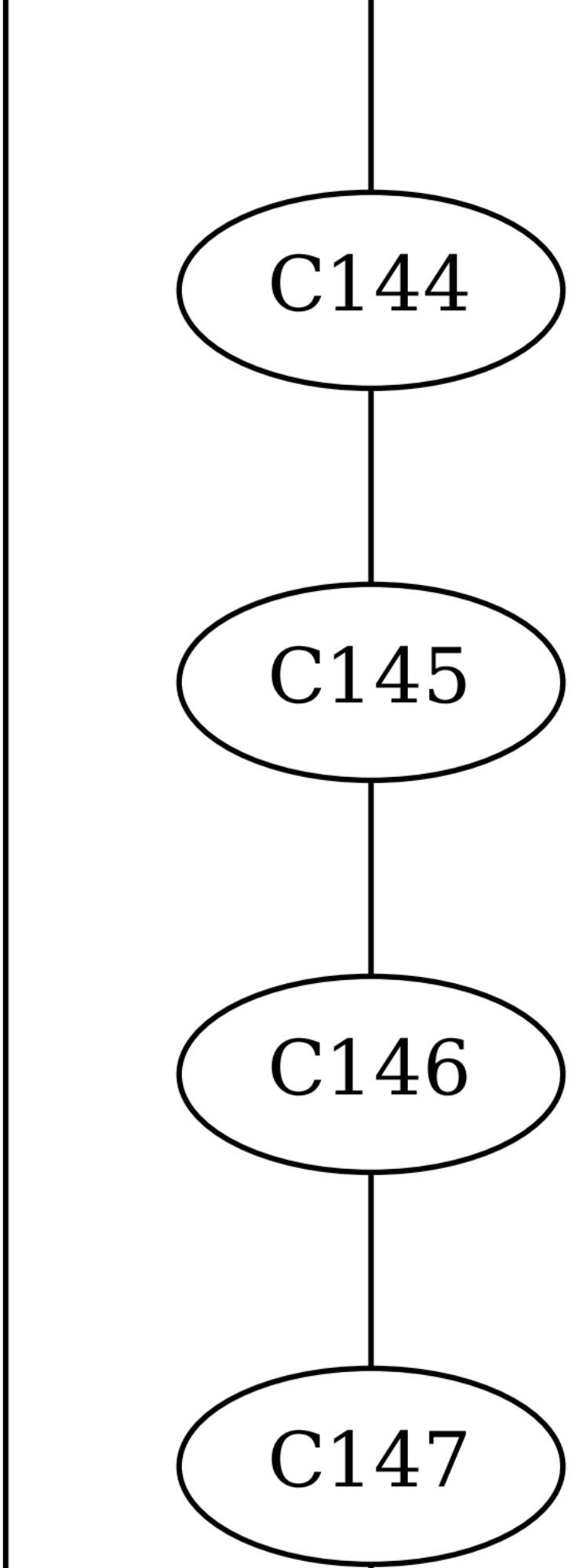
C144
C145
C146
C147

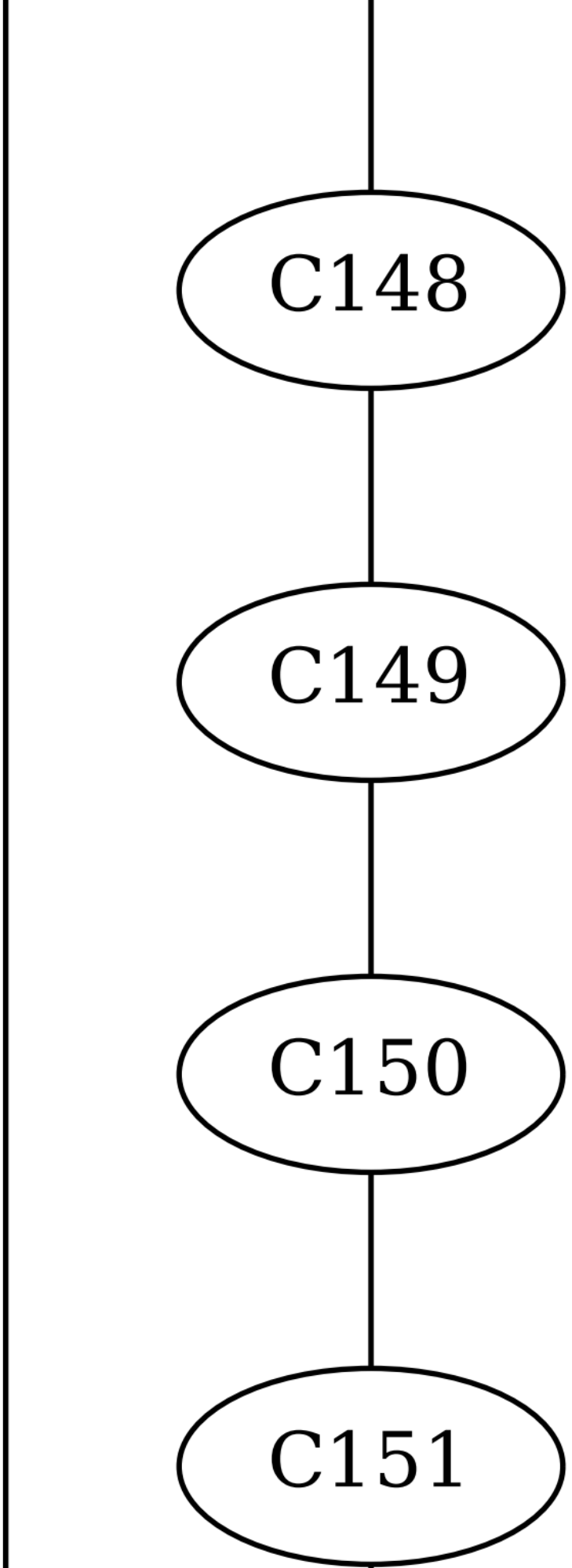
C148
C149
C150
C151

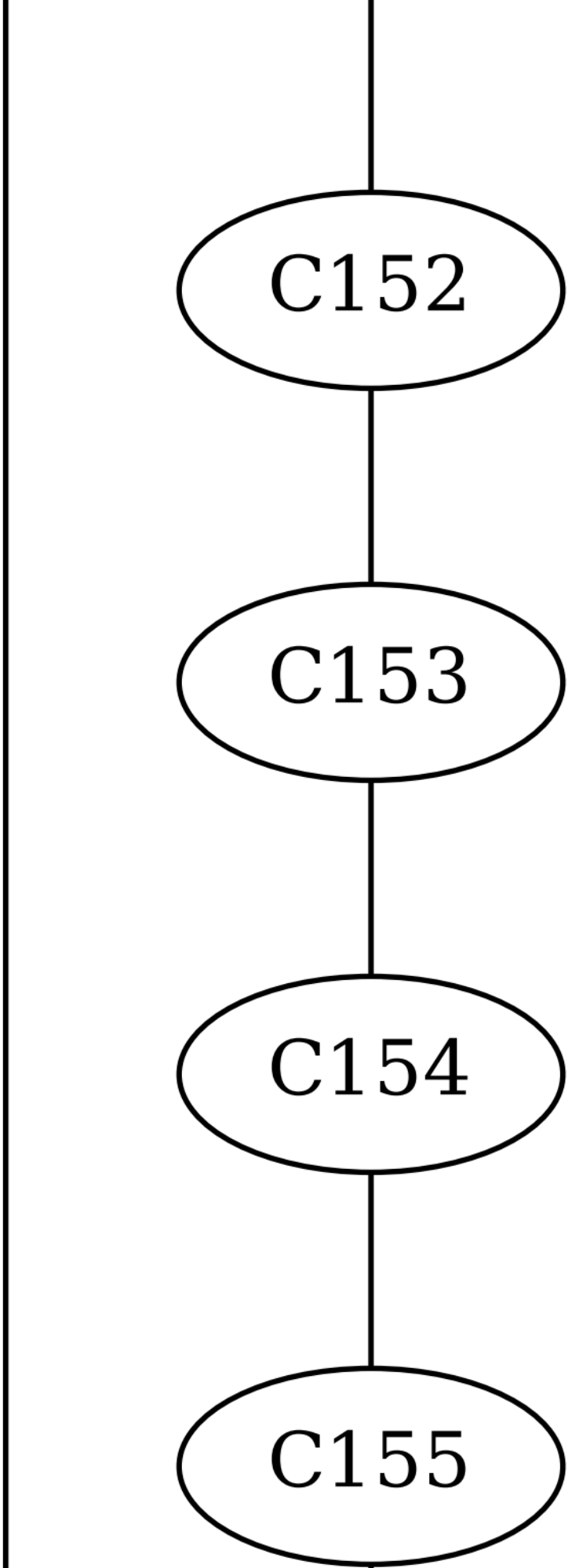
C152
C153
C154
C155

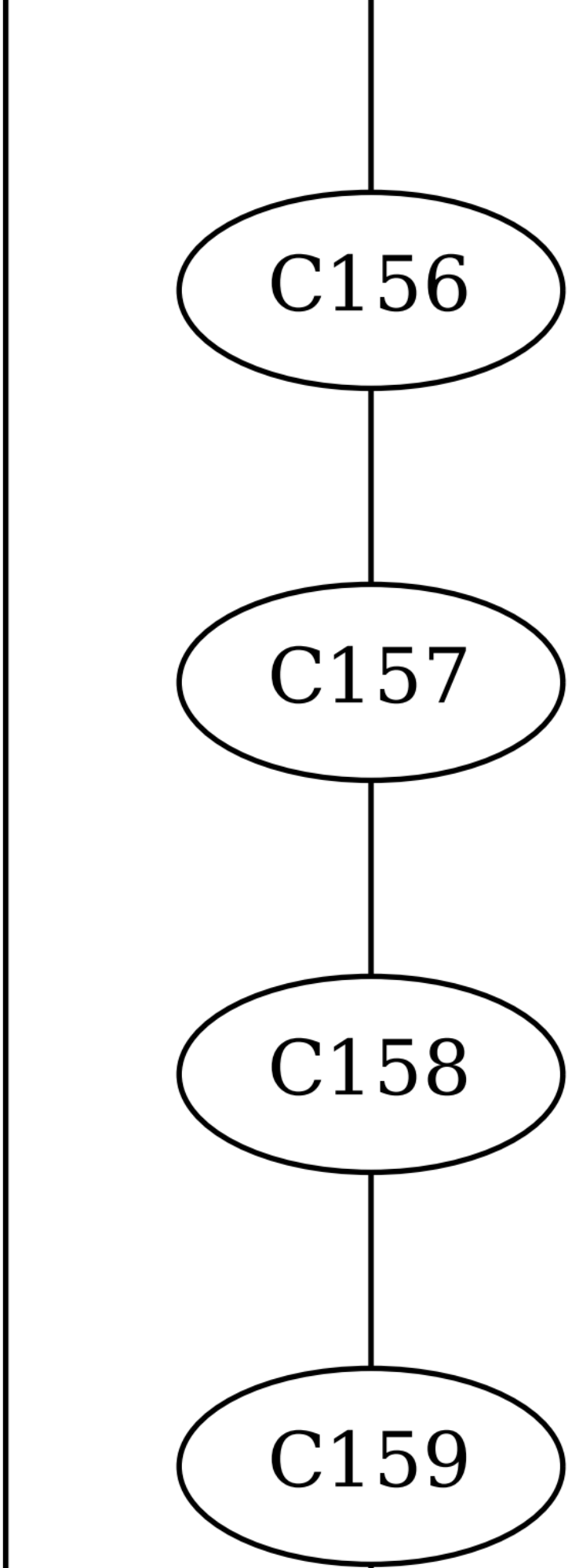
C156
C157
C158
C159

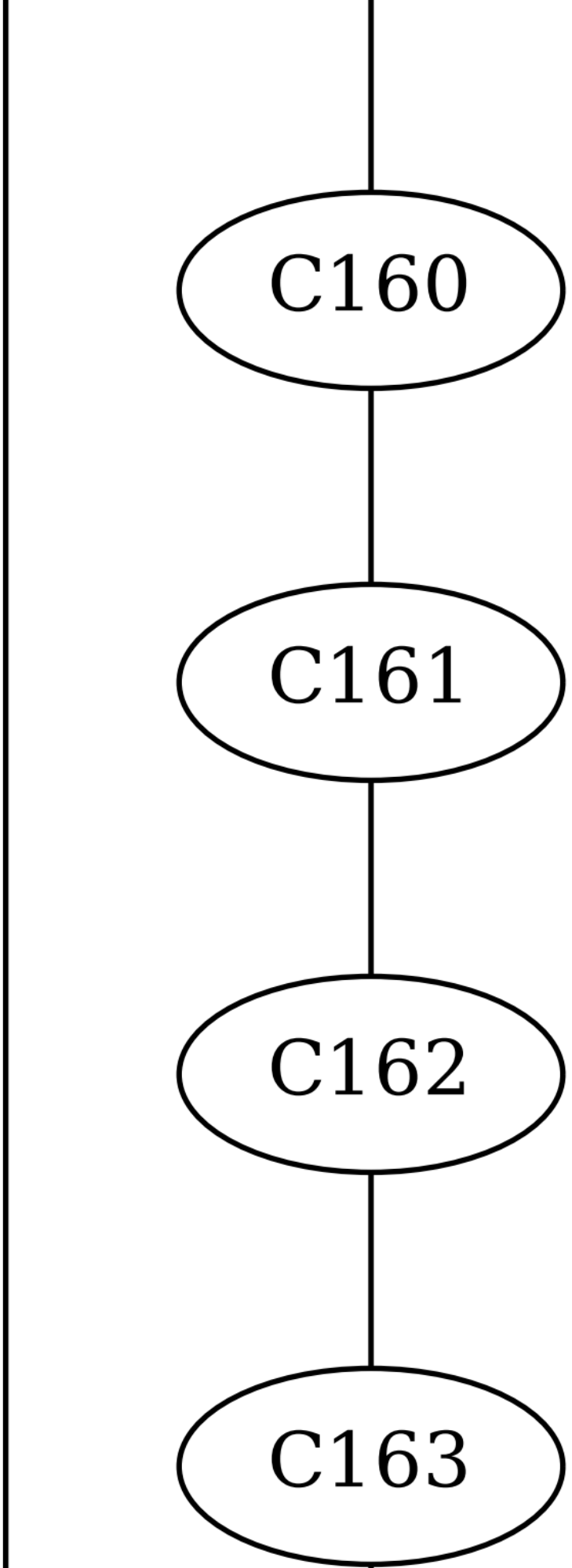
C160
C161
C162
C163

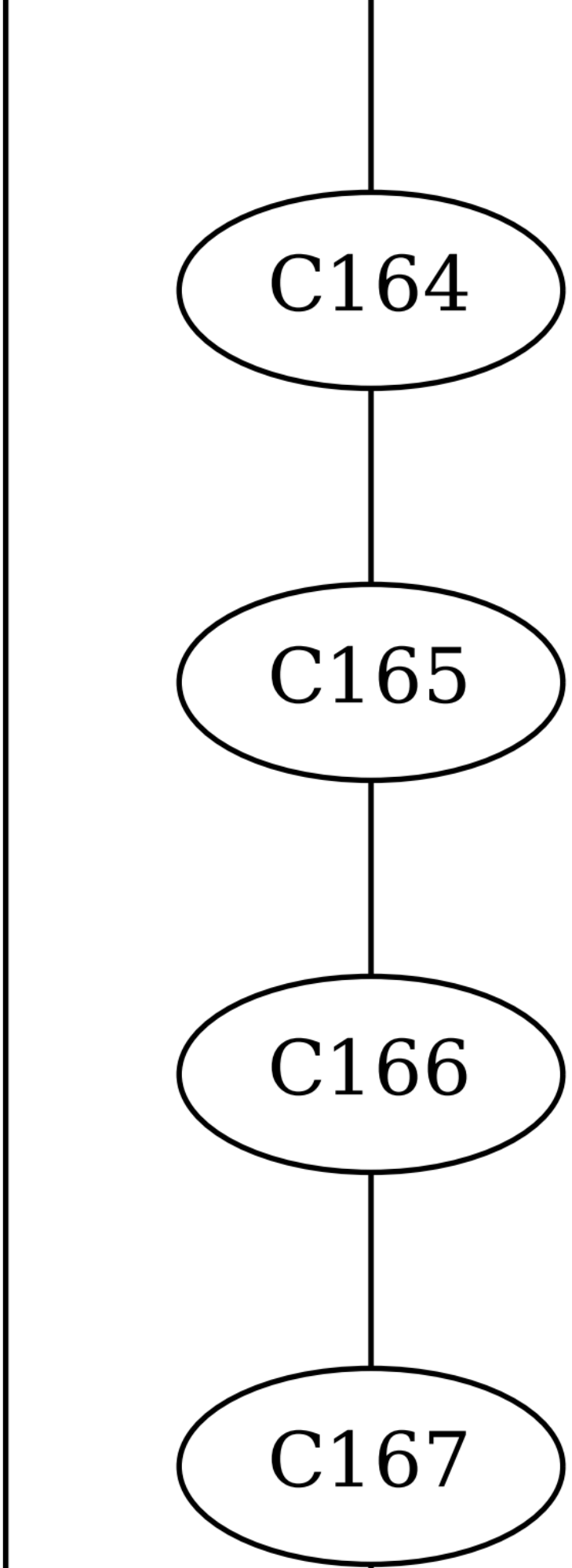
C164
C165
C166
C167

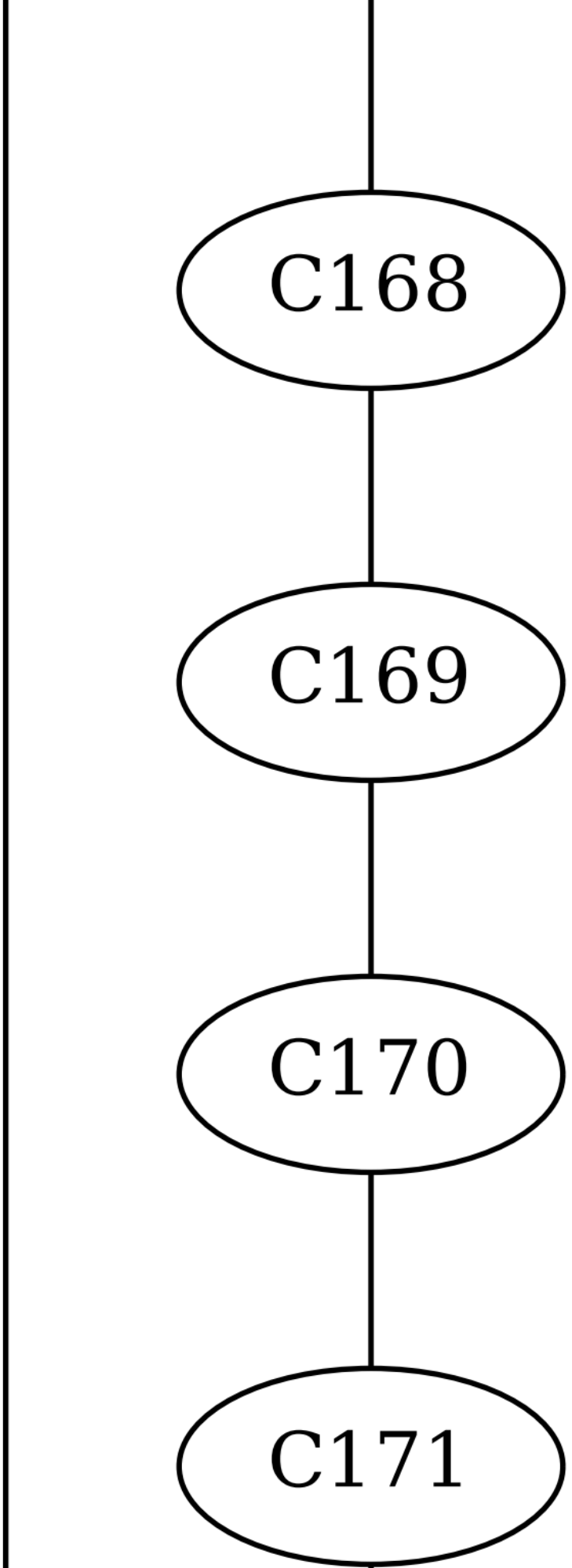
C168
C169
C170
C171

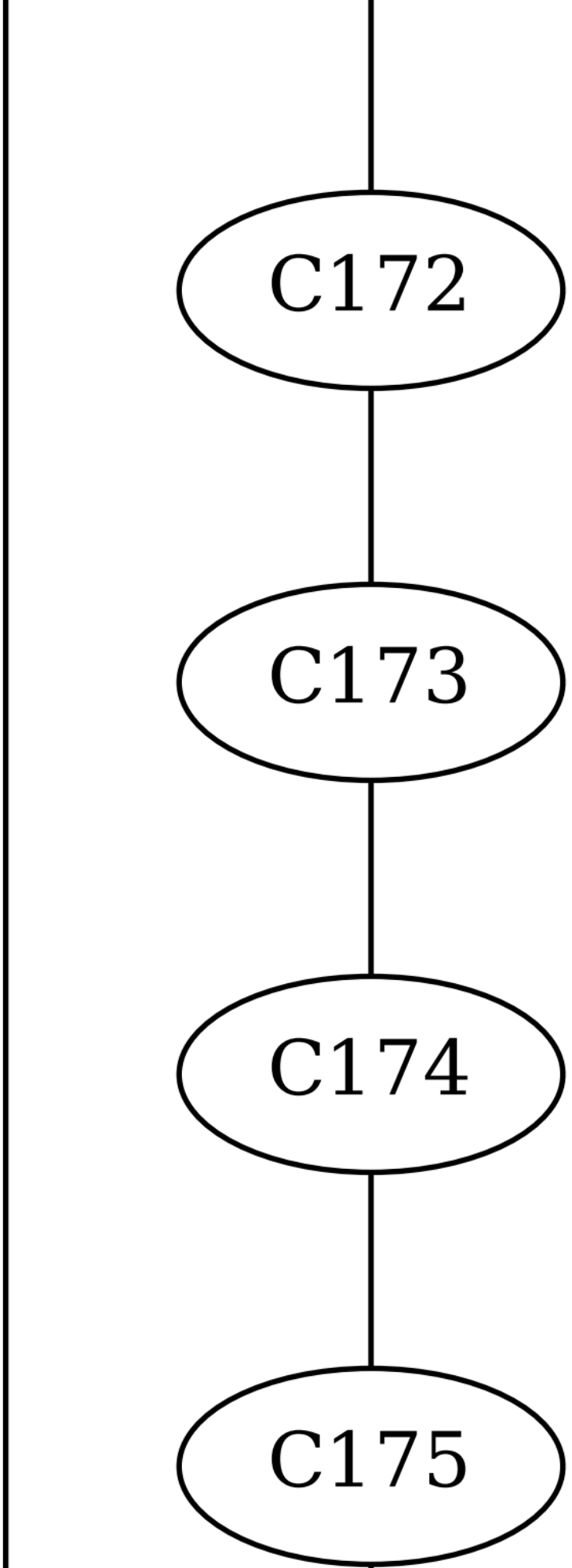
C172
C173
C174
C175

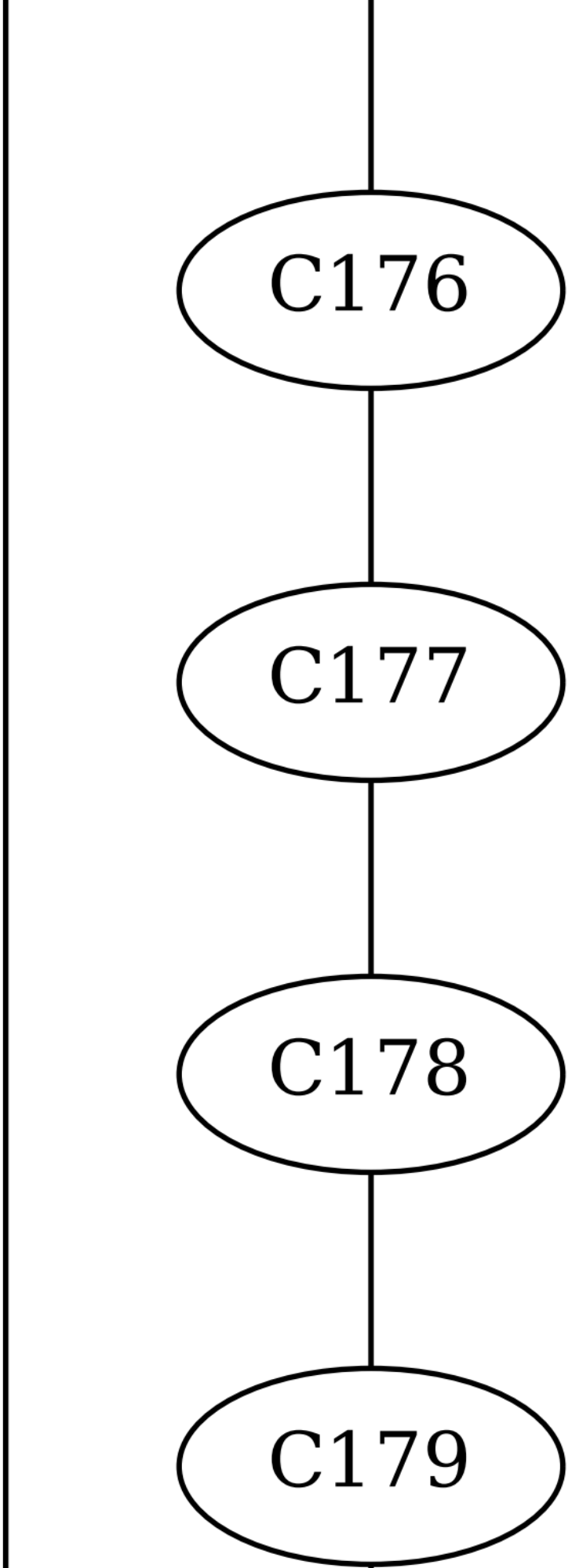
C176
C177
C178
C179

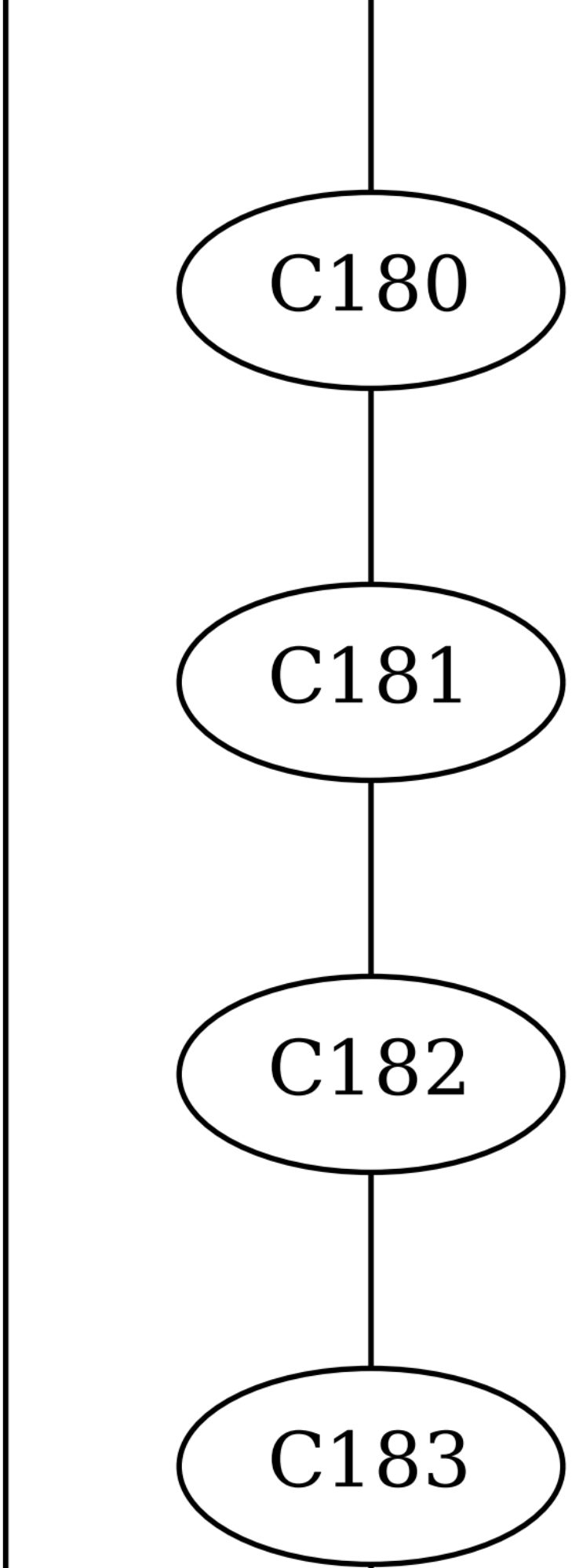
C180
C181
C182
C183

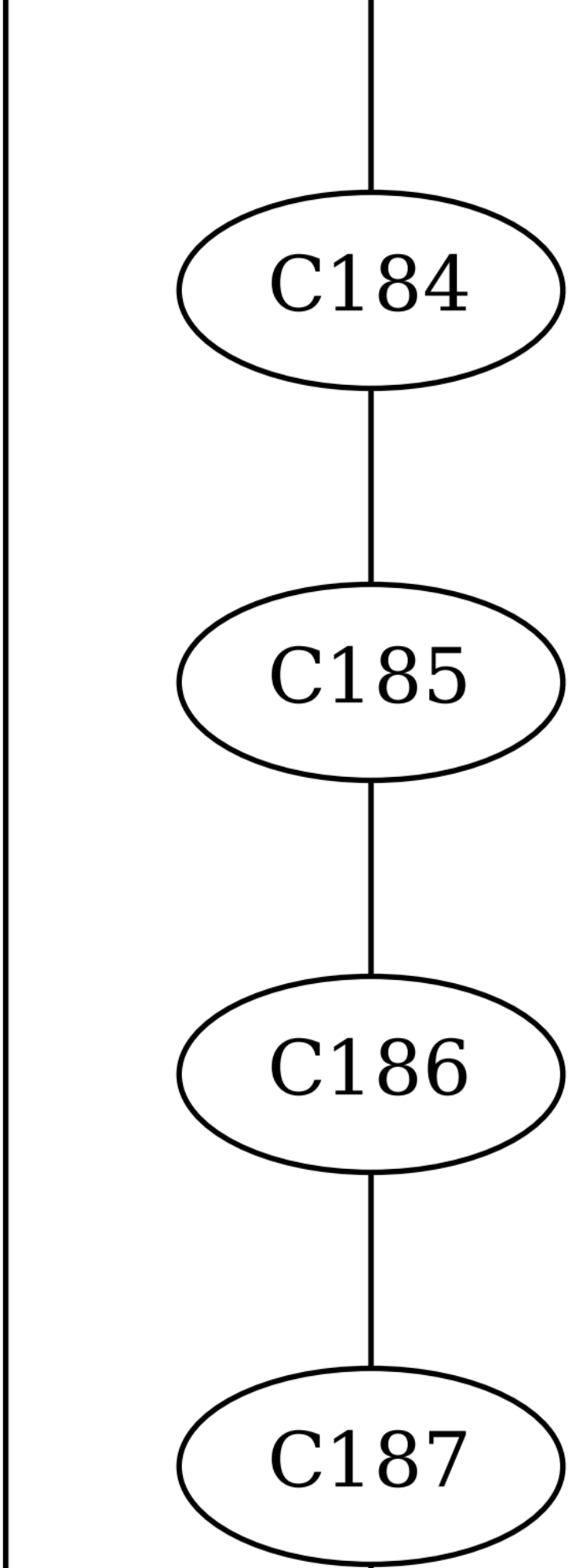
C184
C185
C186
C187

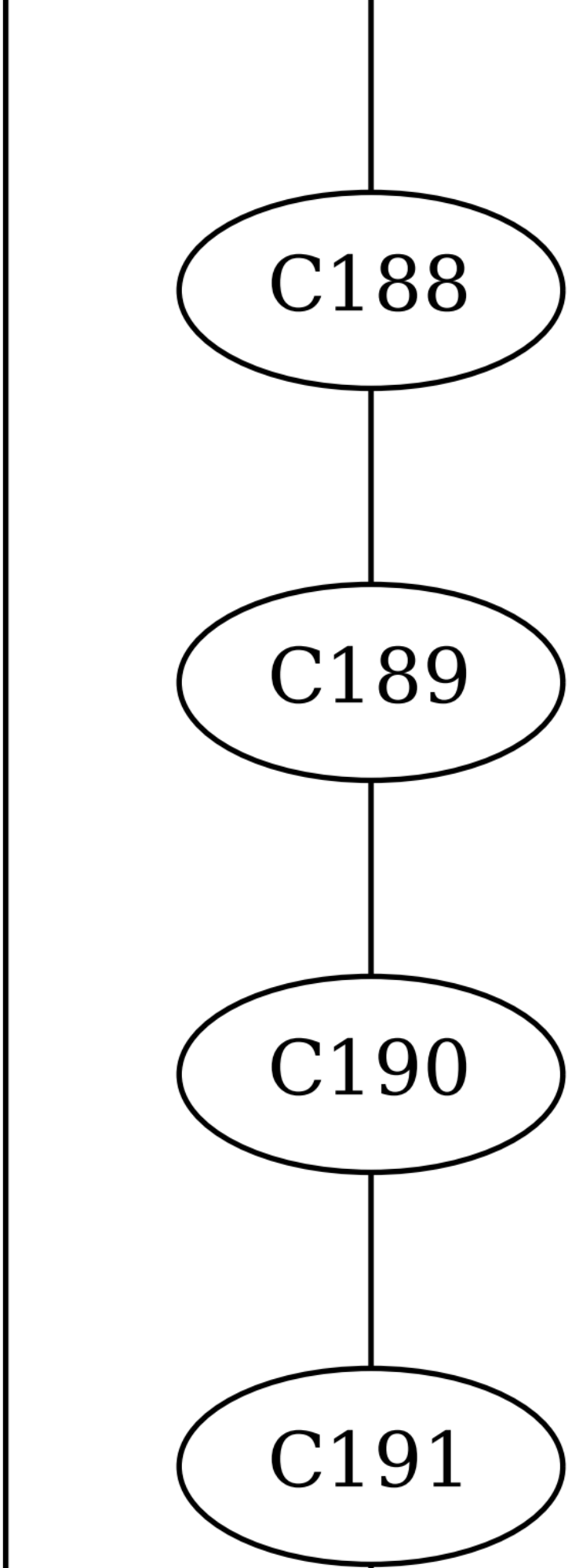
C188
C189
C190
C191

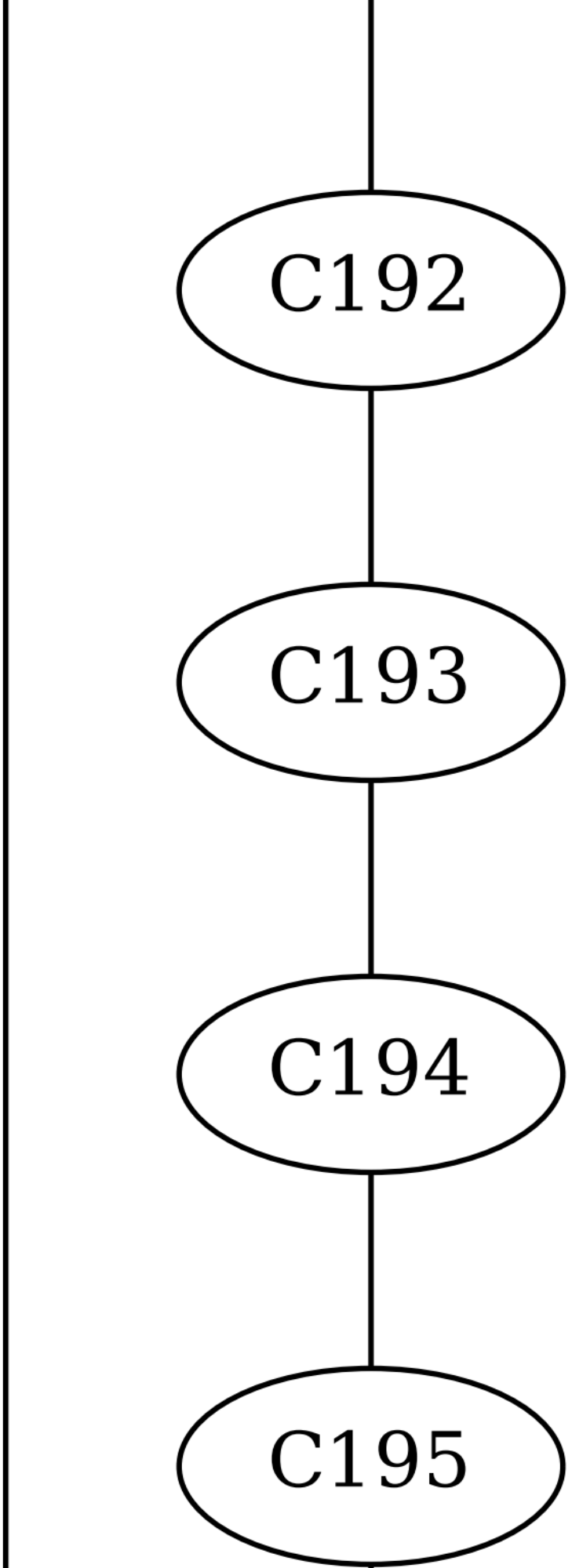
C192
C193
C194
C195

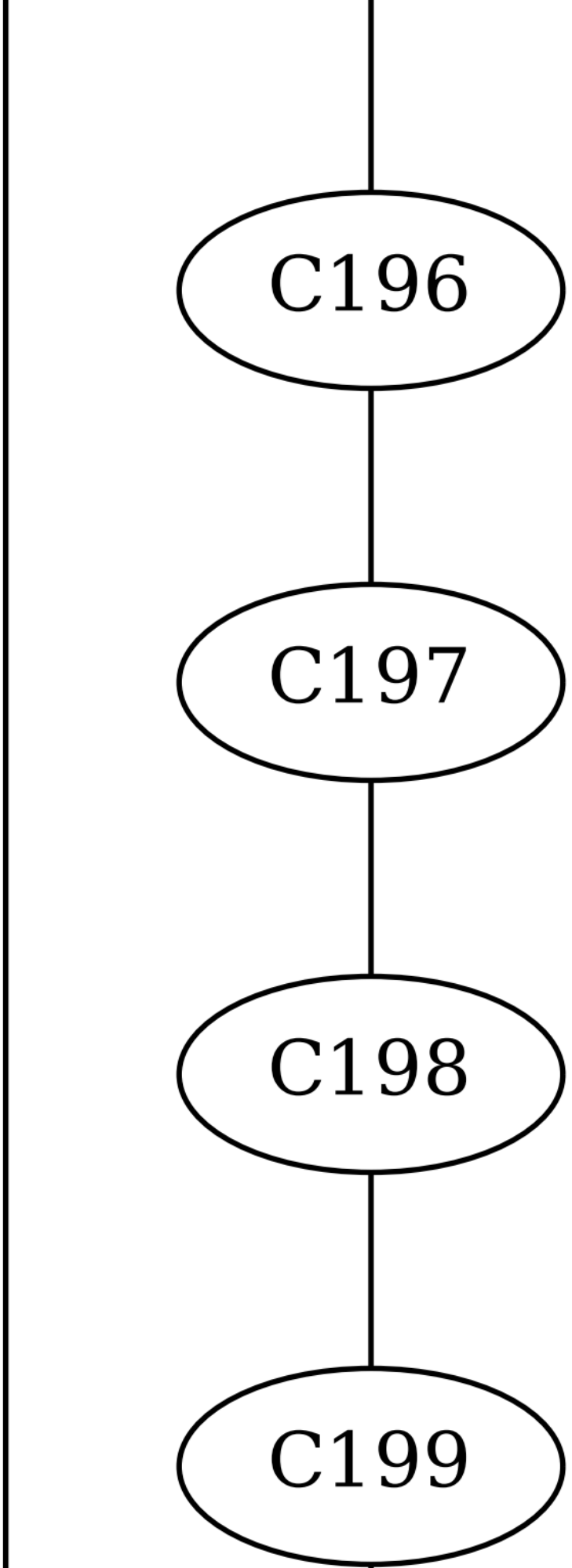
C196
C197
C198
C199

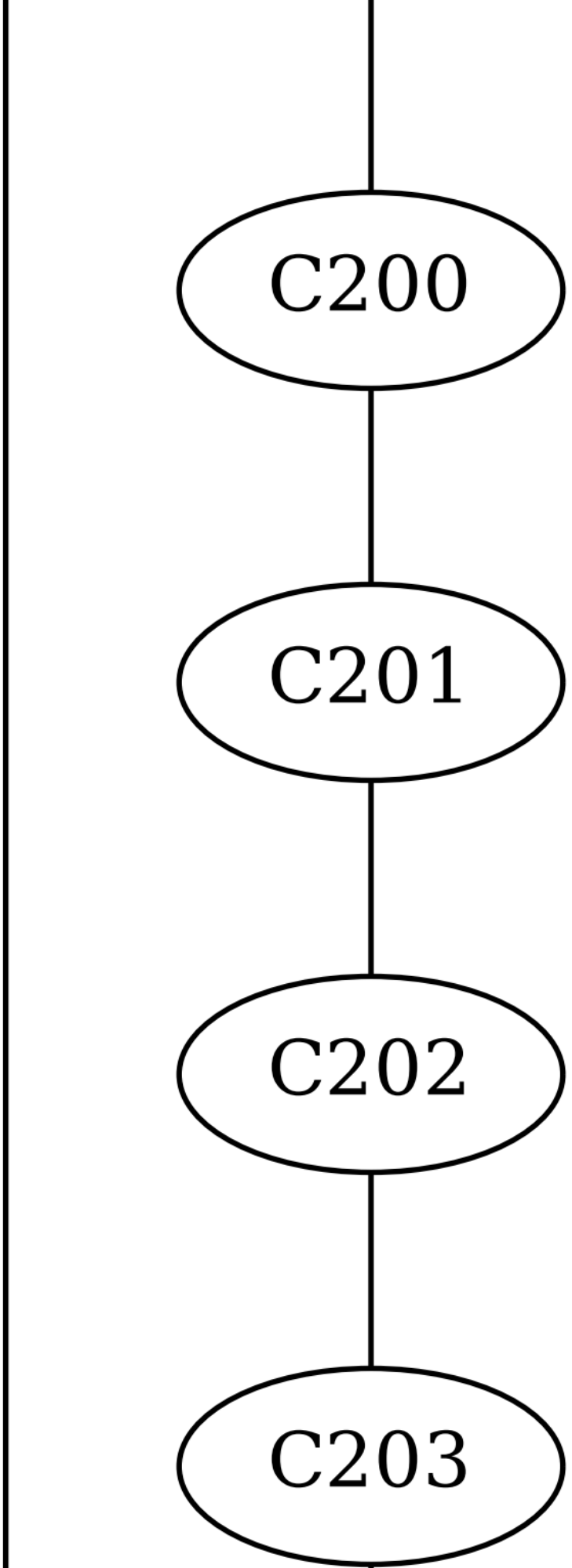
C200
C201
C202
C203

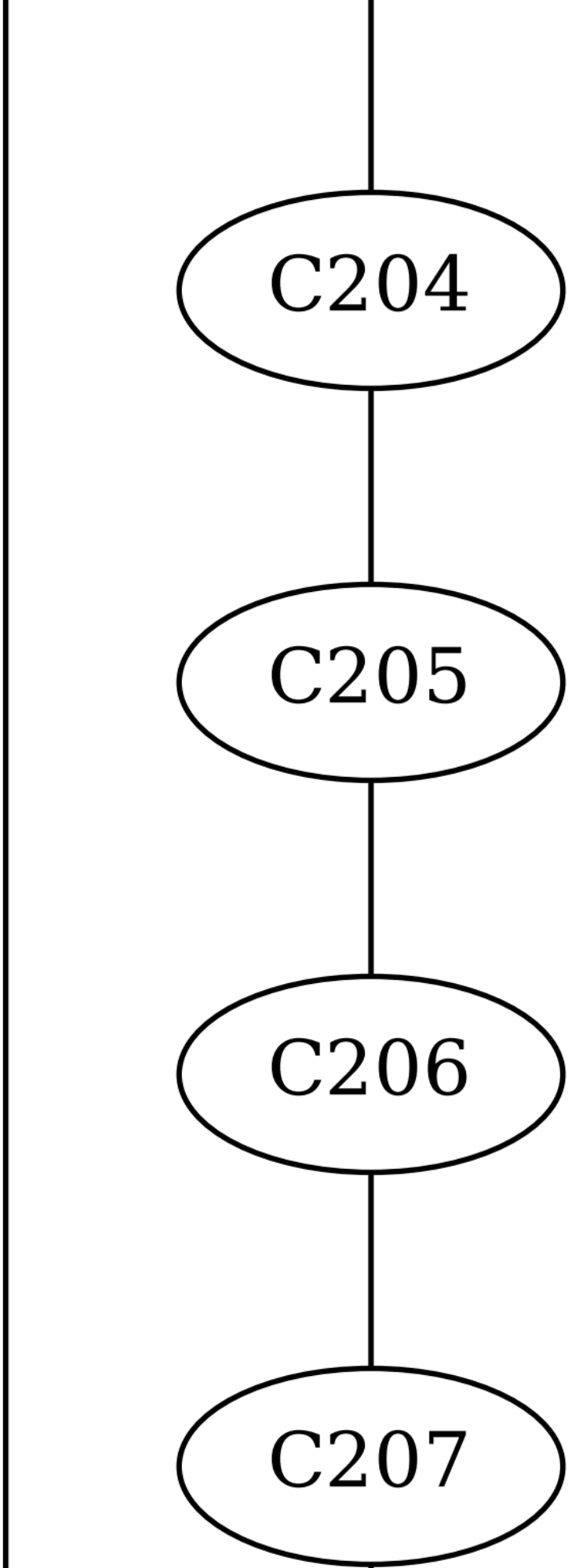
C204
C205
C206
C207

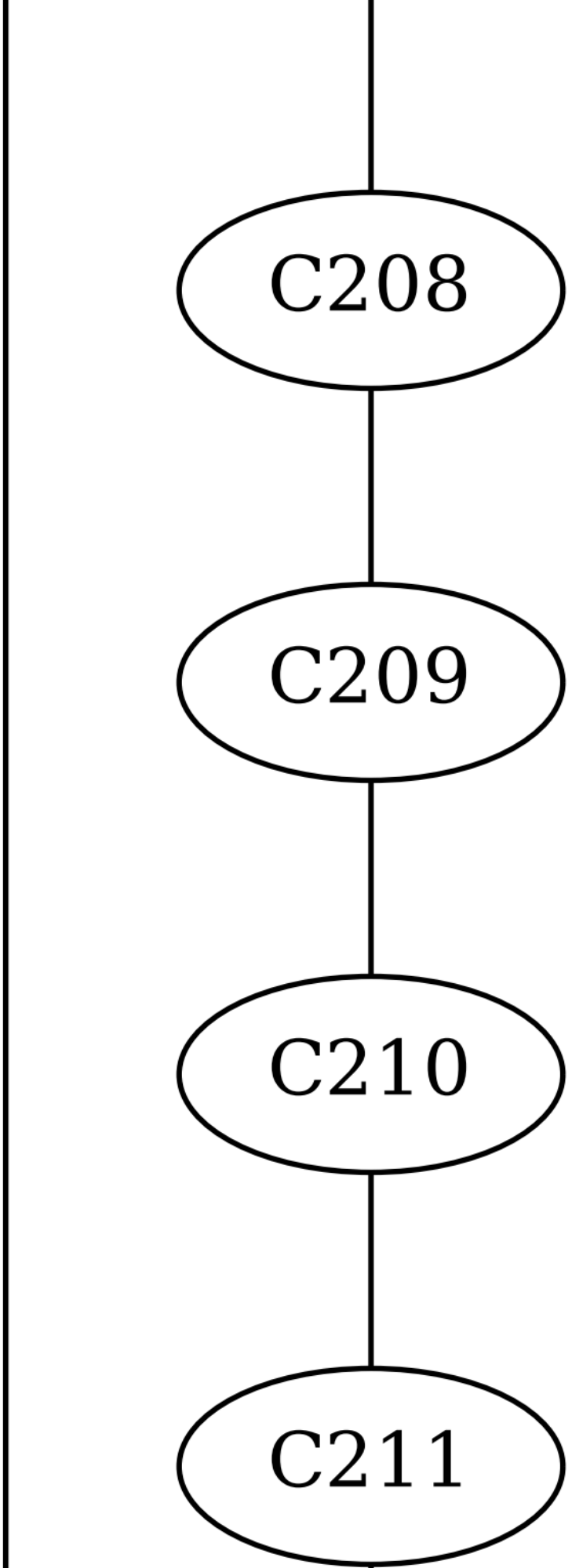
C208
C209
C210
C211

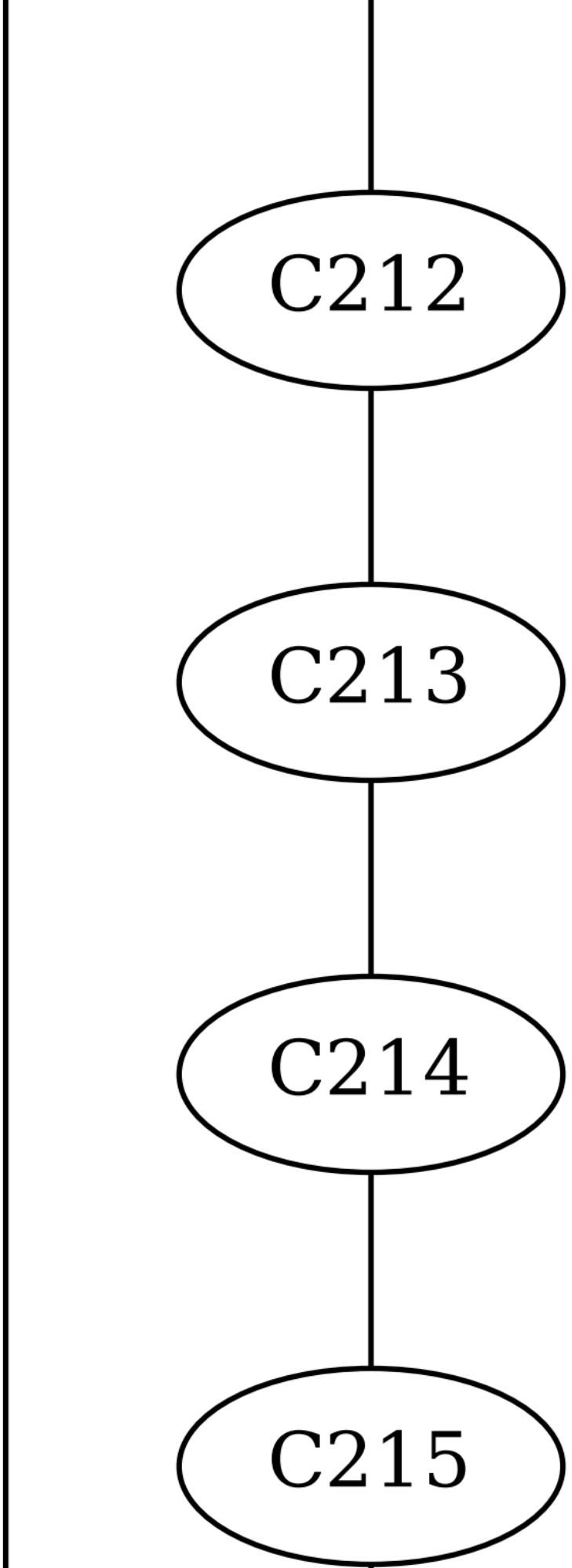
C212
C213
C214
C215

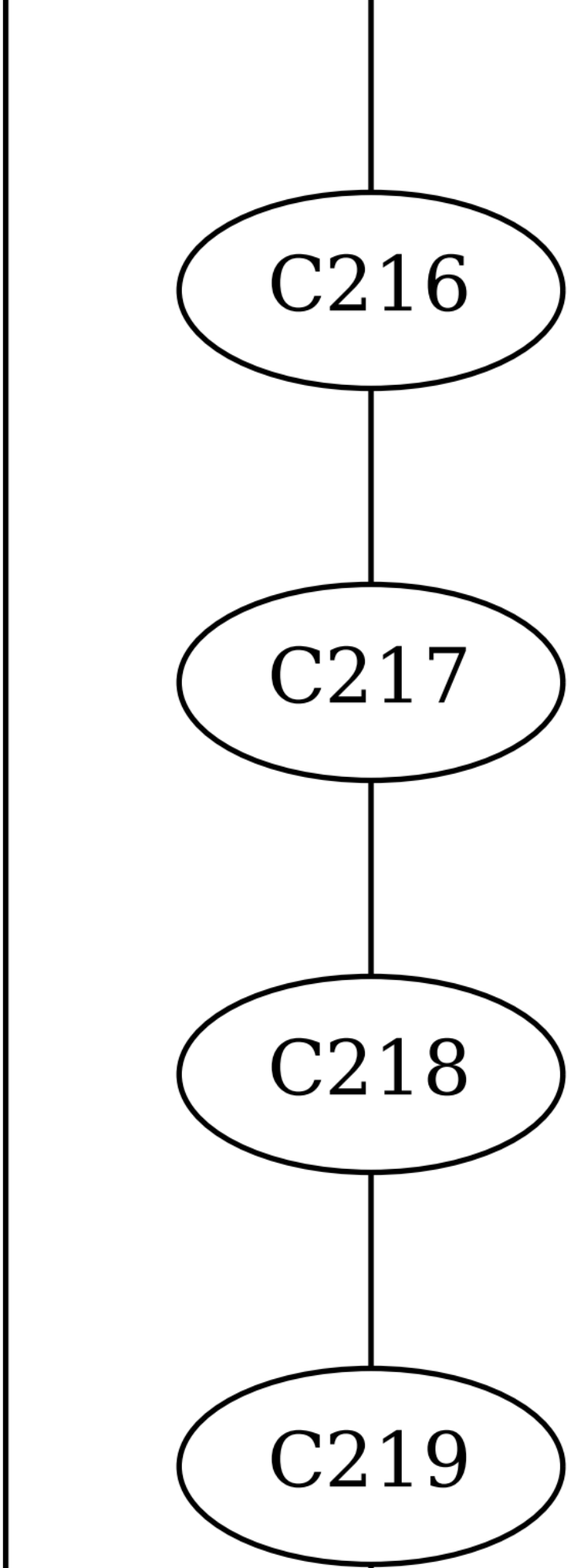
C216
C217
C218
C219

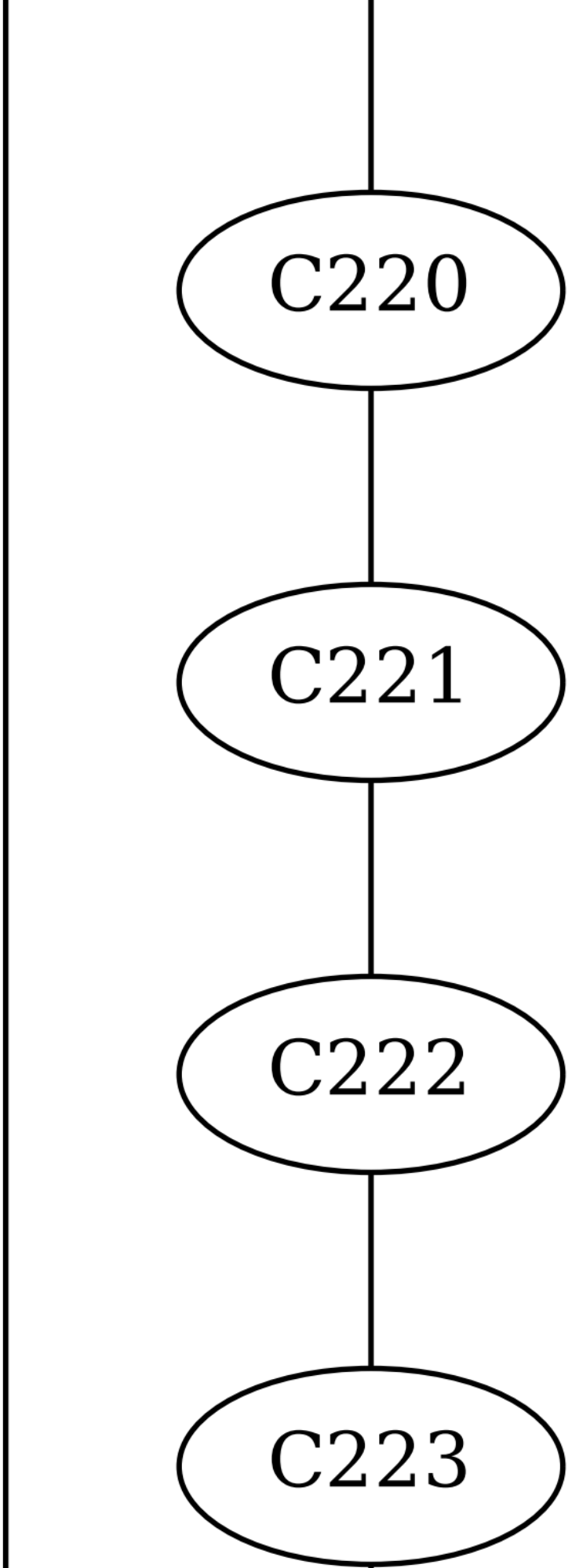
C220
C221
C222
C223

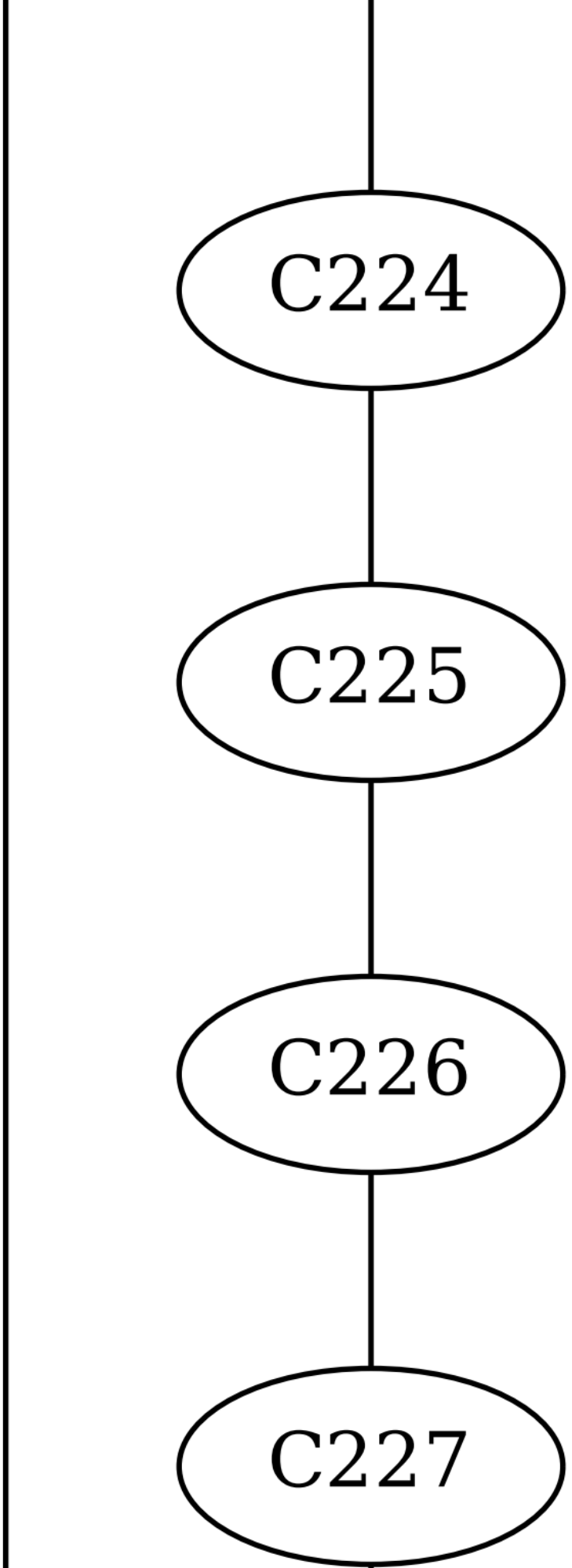
C224
C225
C226
C227

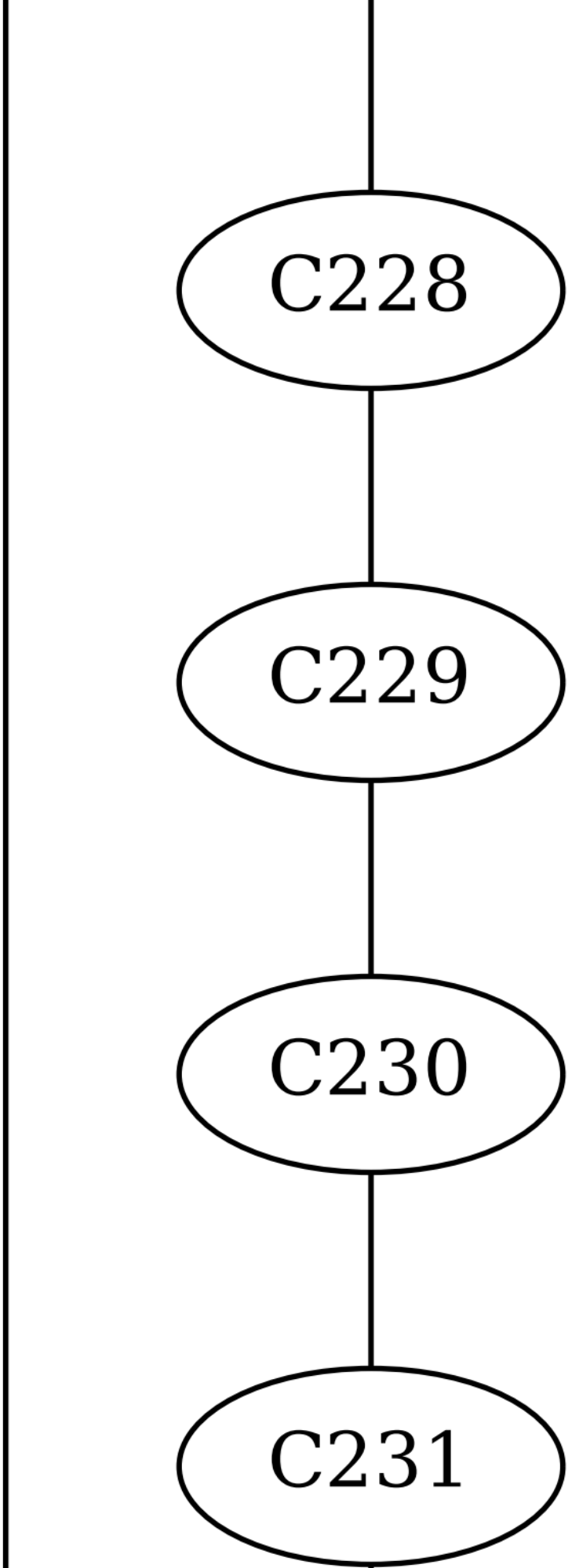
C228
C229
C230
C231

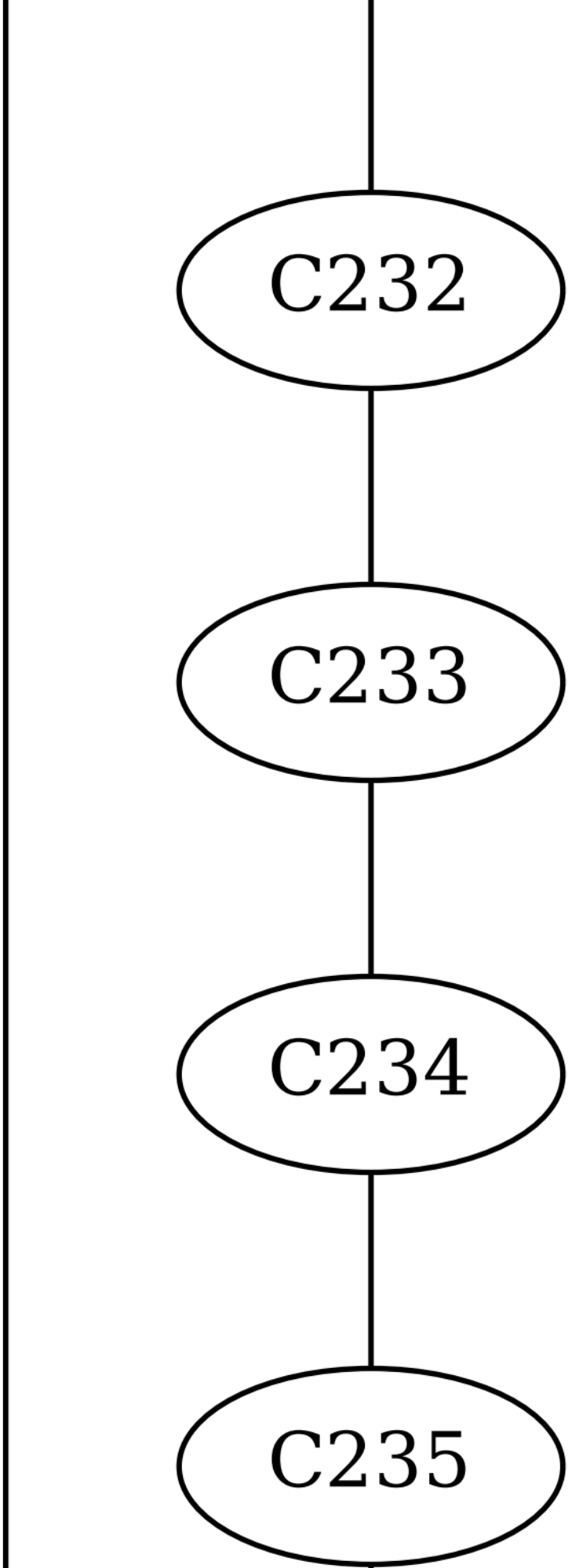
C232
C233
C234
C235

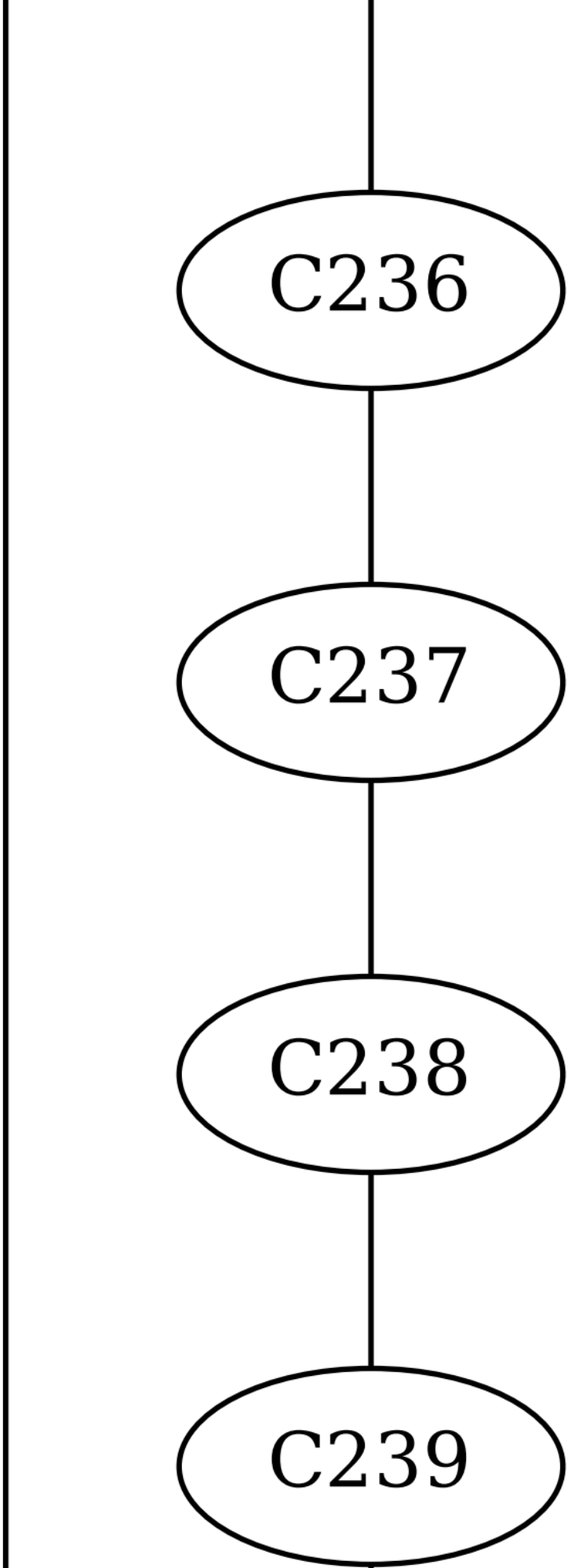
C236
C237
C238
C239

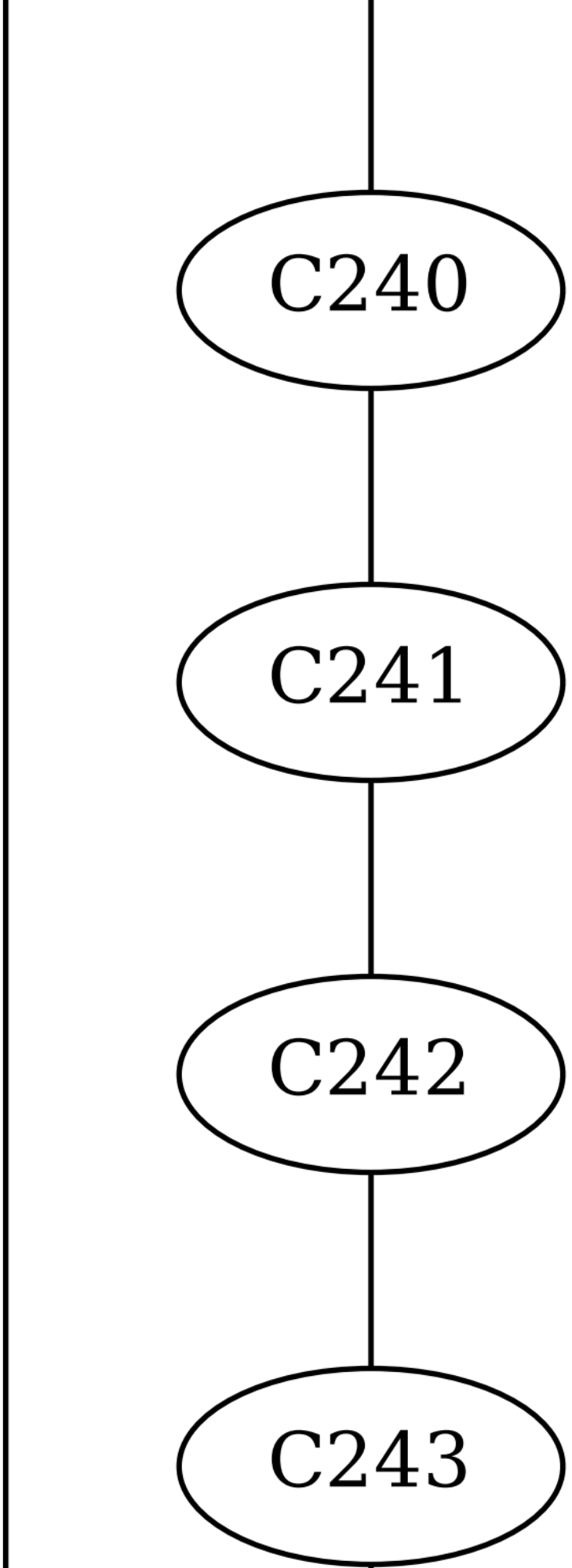
C240
C241
C242
C243

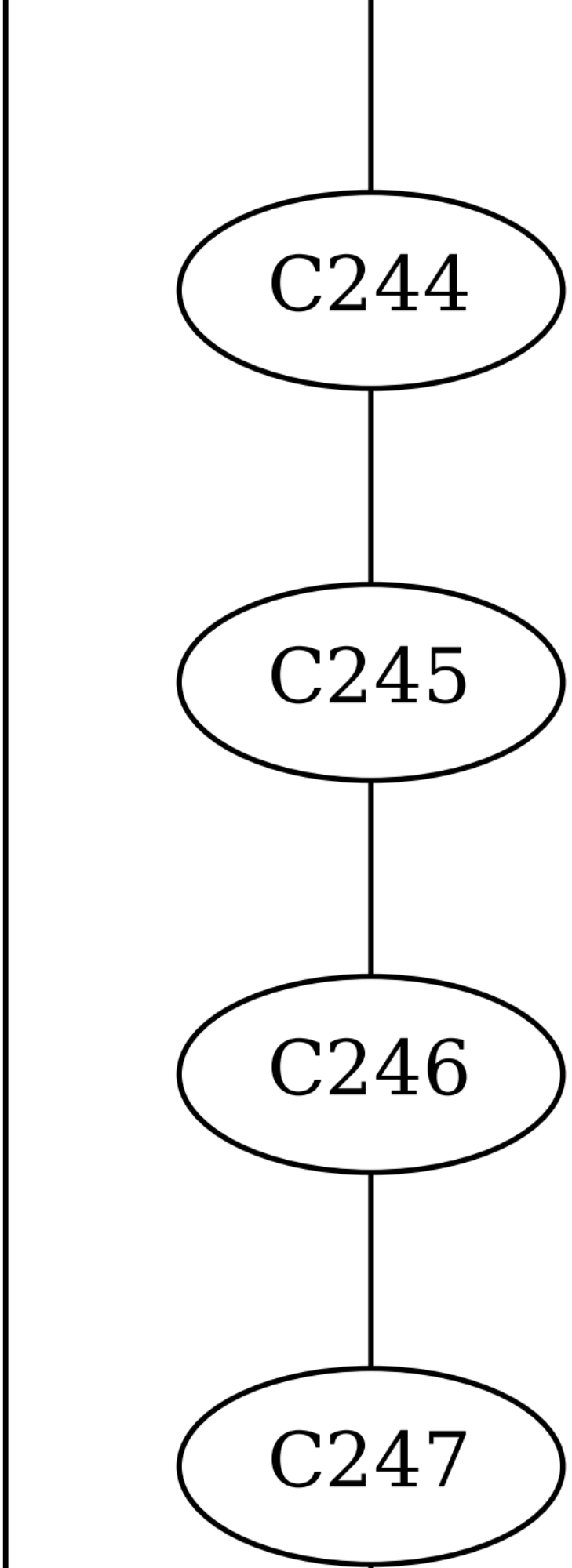
C244
C245
C246
C247

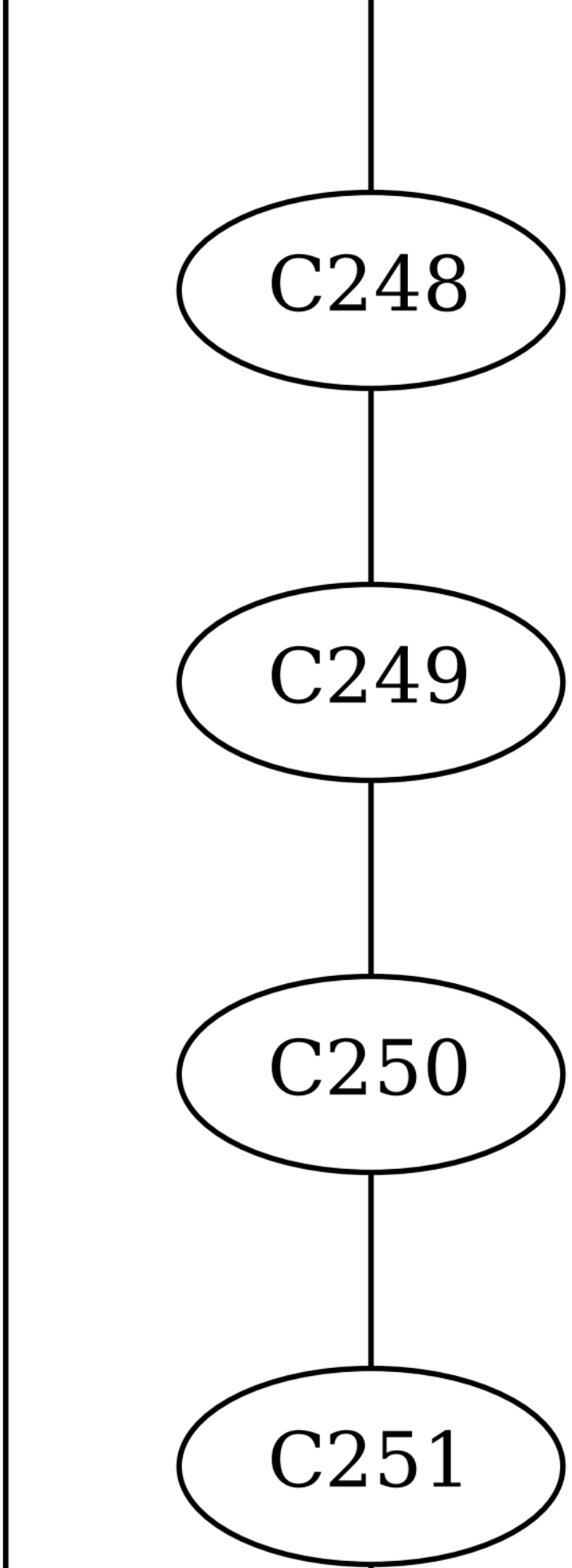
C248
C249
C250
C251

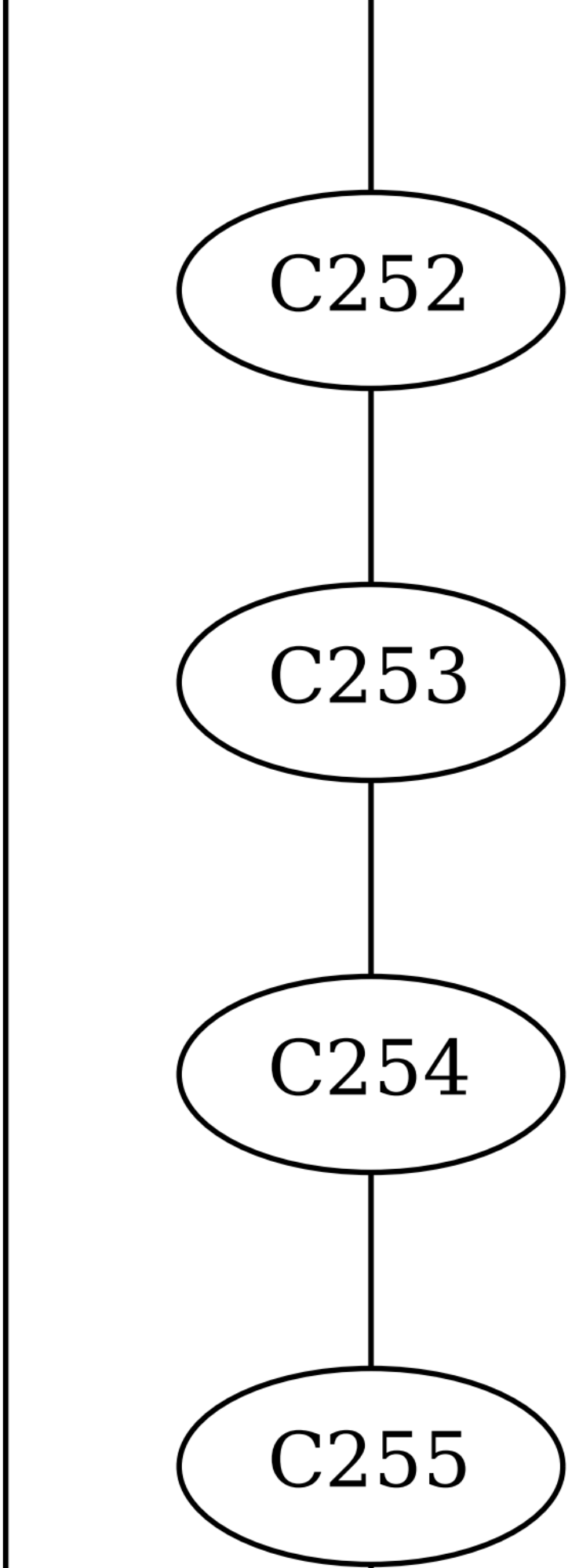
C252
C253
C254
C255

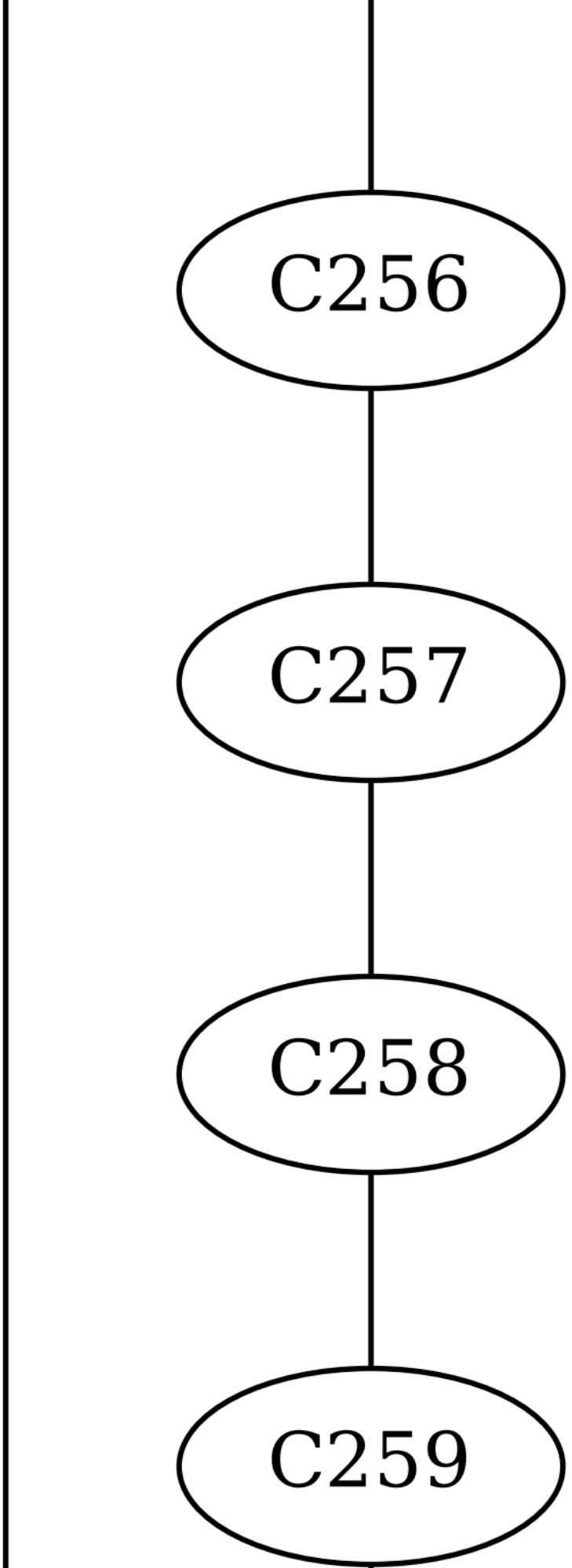
C256
C257
C258
C259

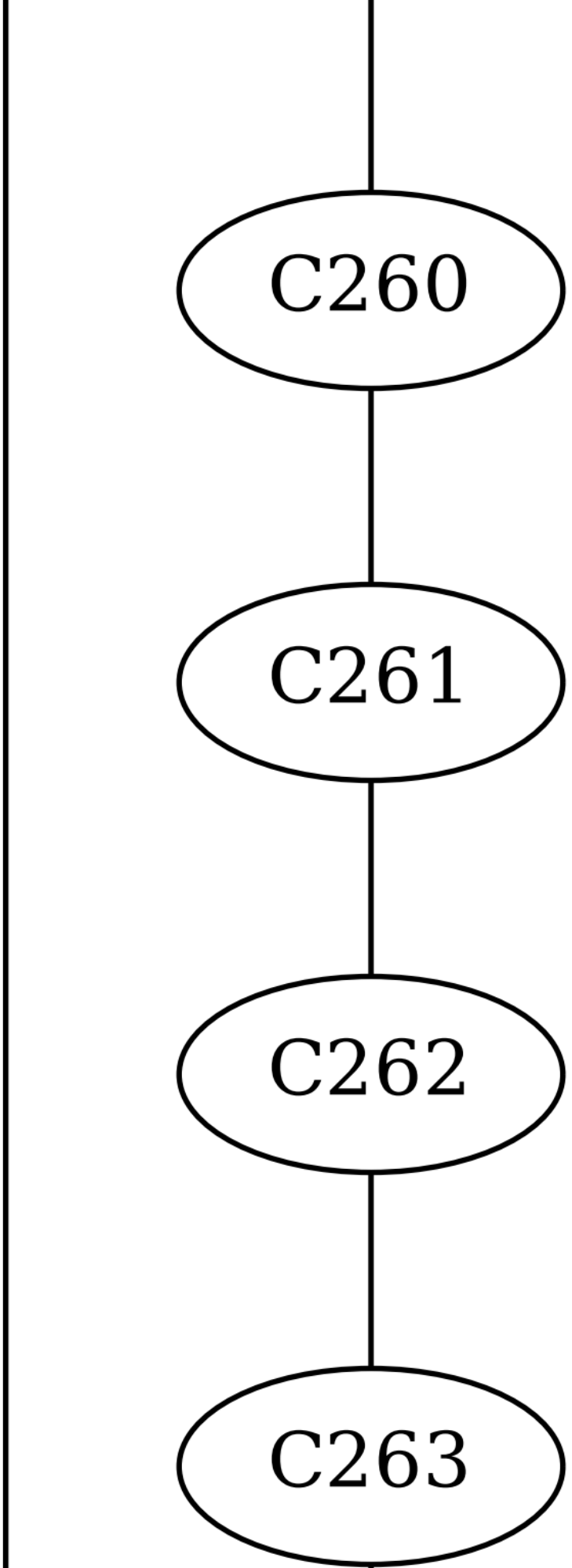
C260
C261
C262
C263

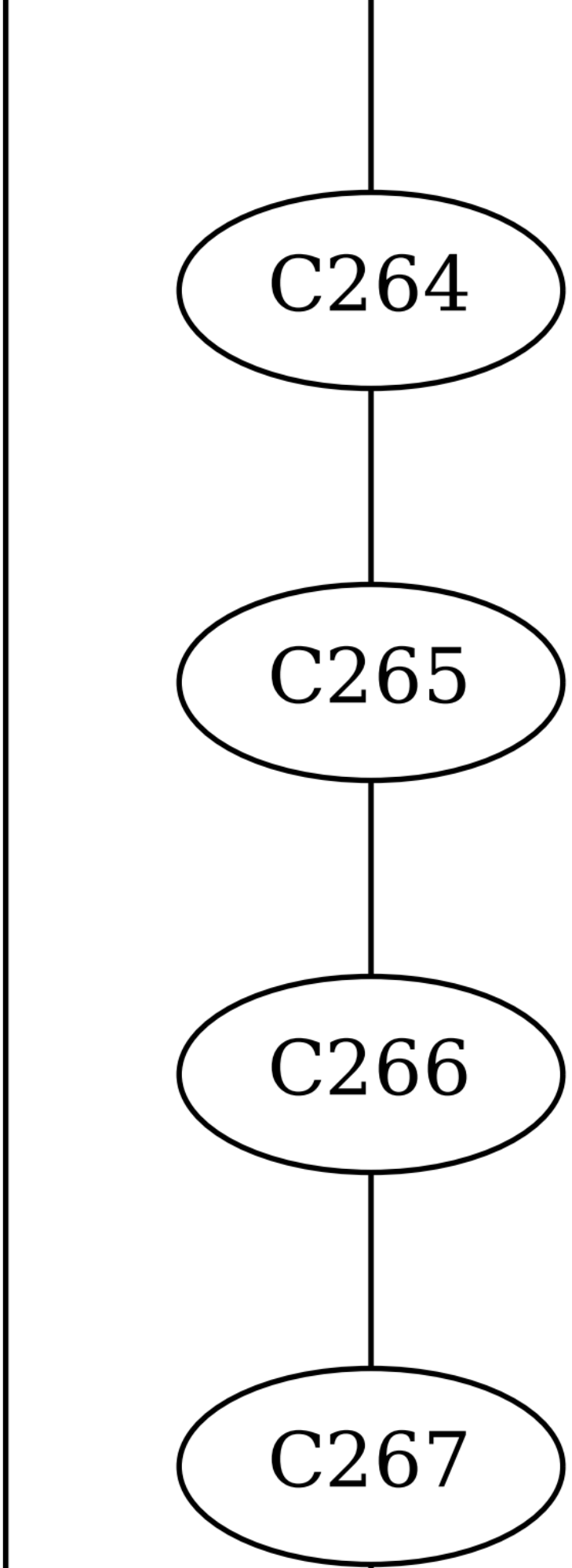
C264
C265
C266
C267

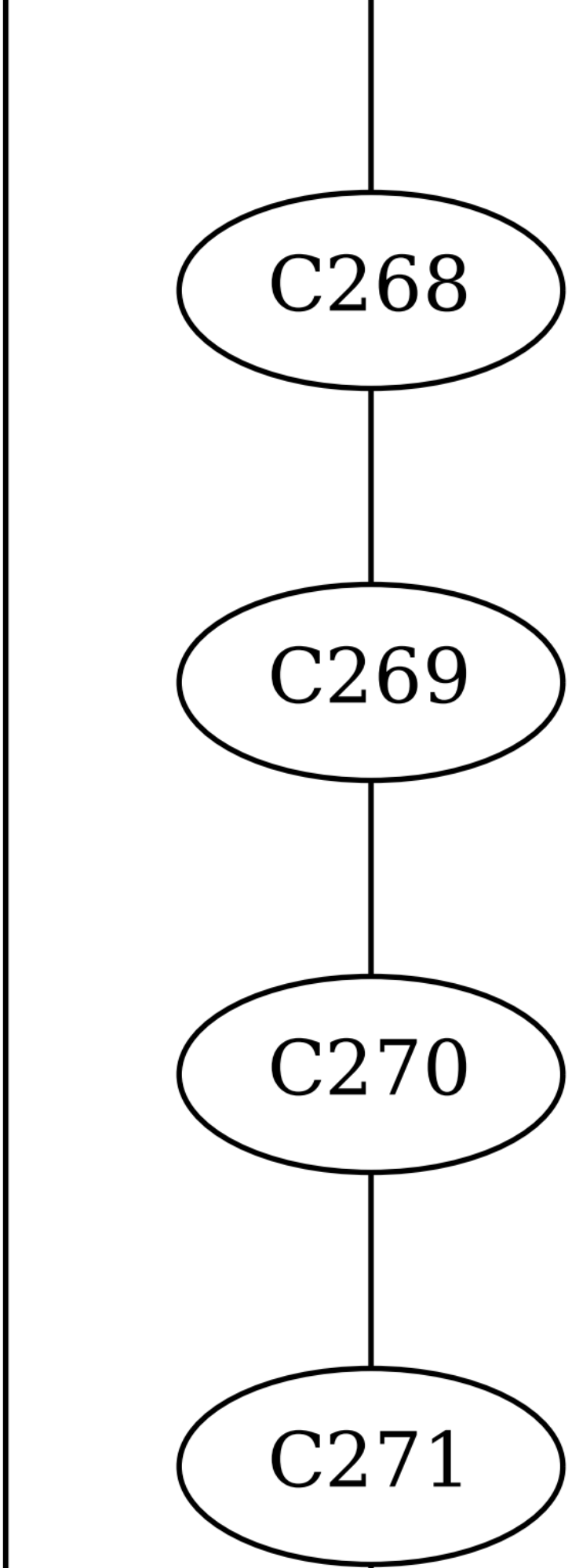
C268
C269
C270
C271

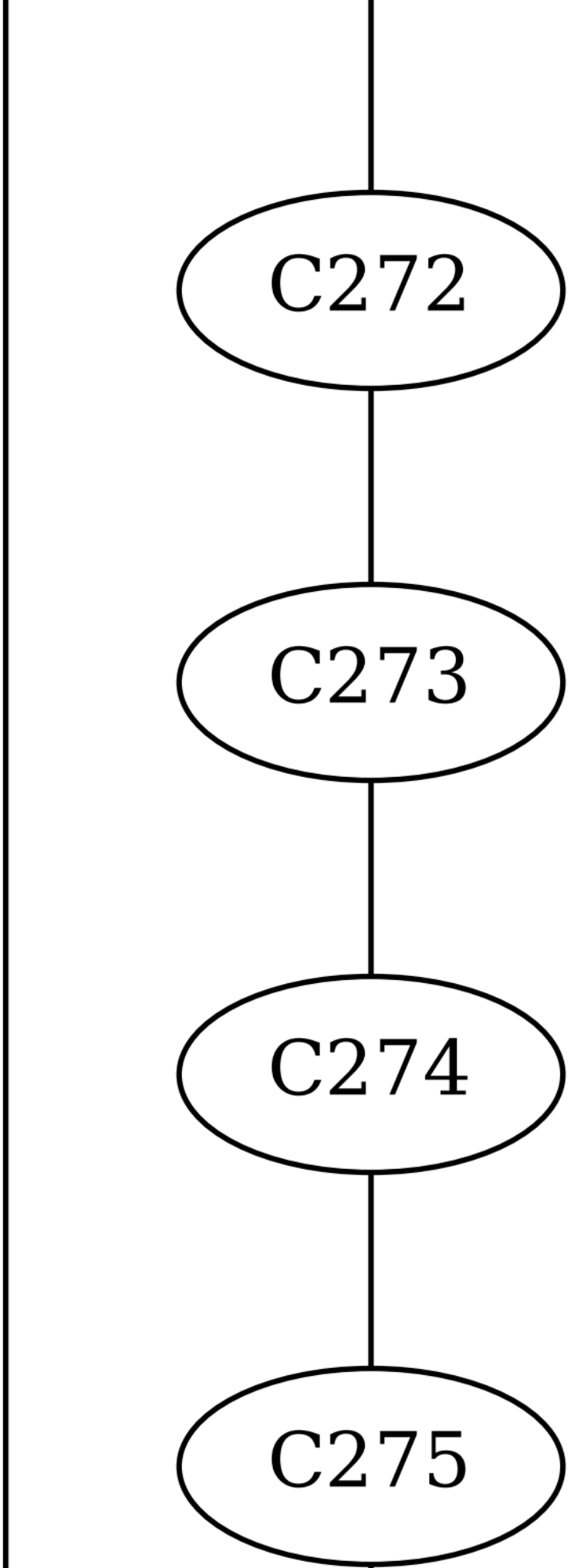
C272
C273
C274
C275

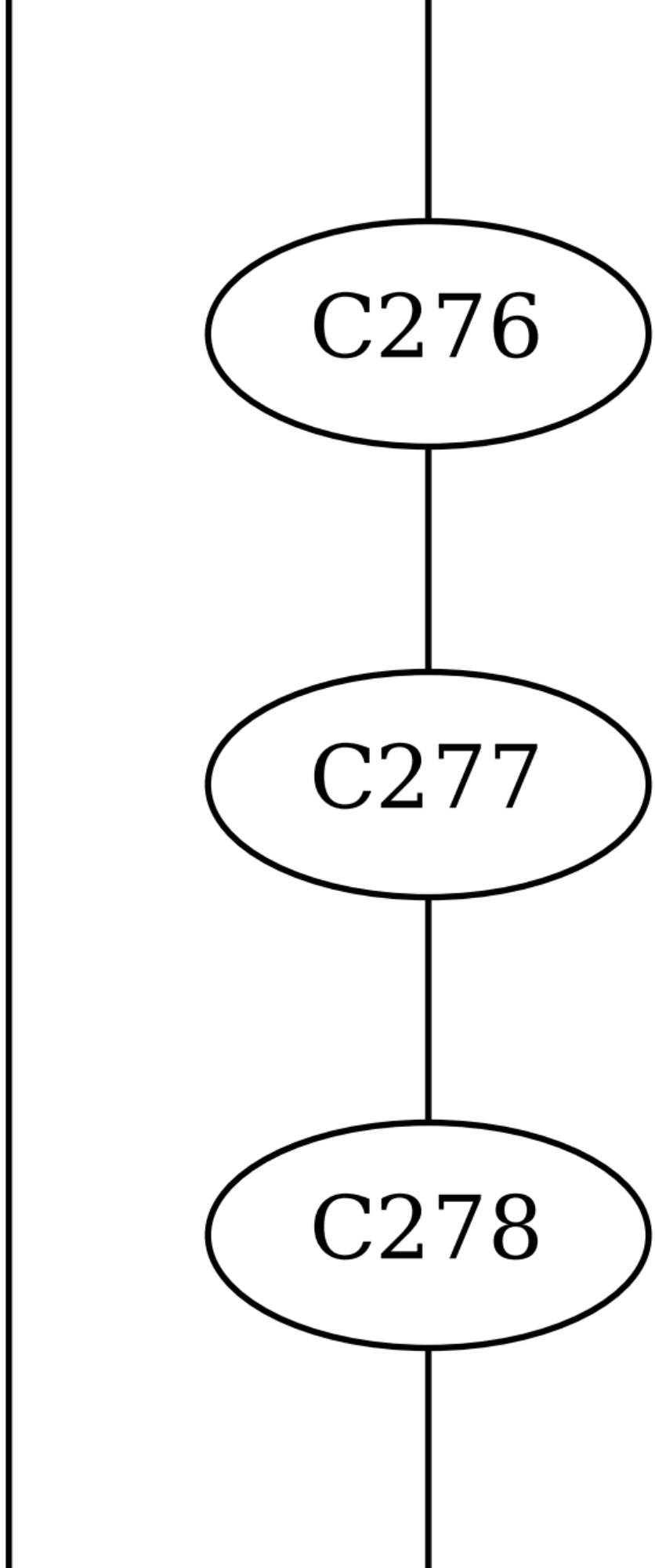
C276
C277
C278

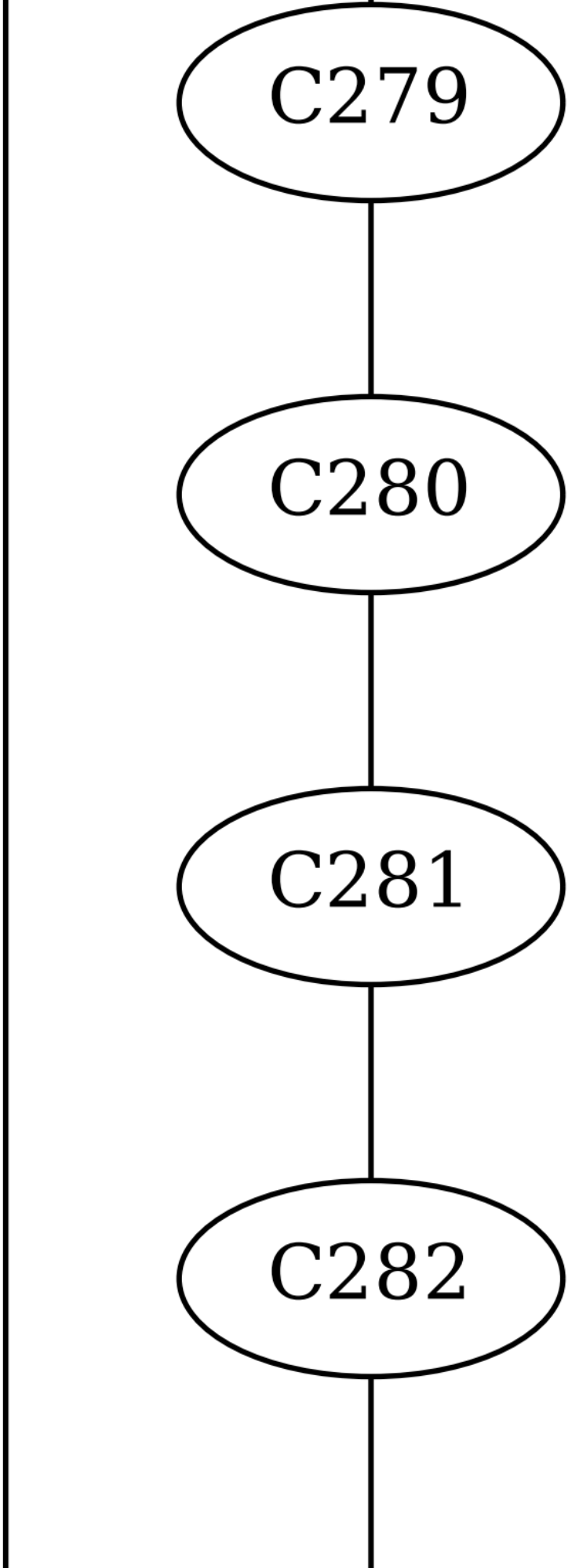
C279
C280
C281
C282

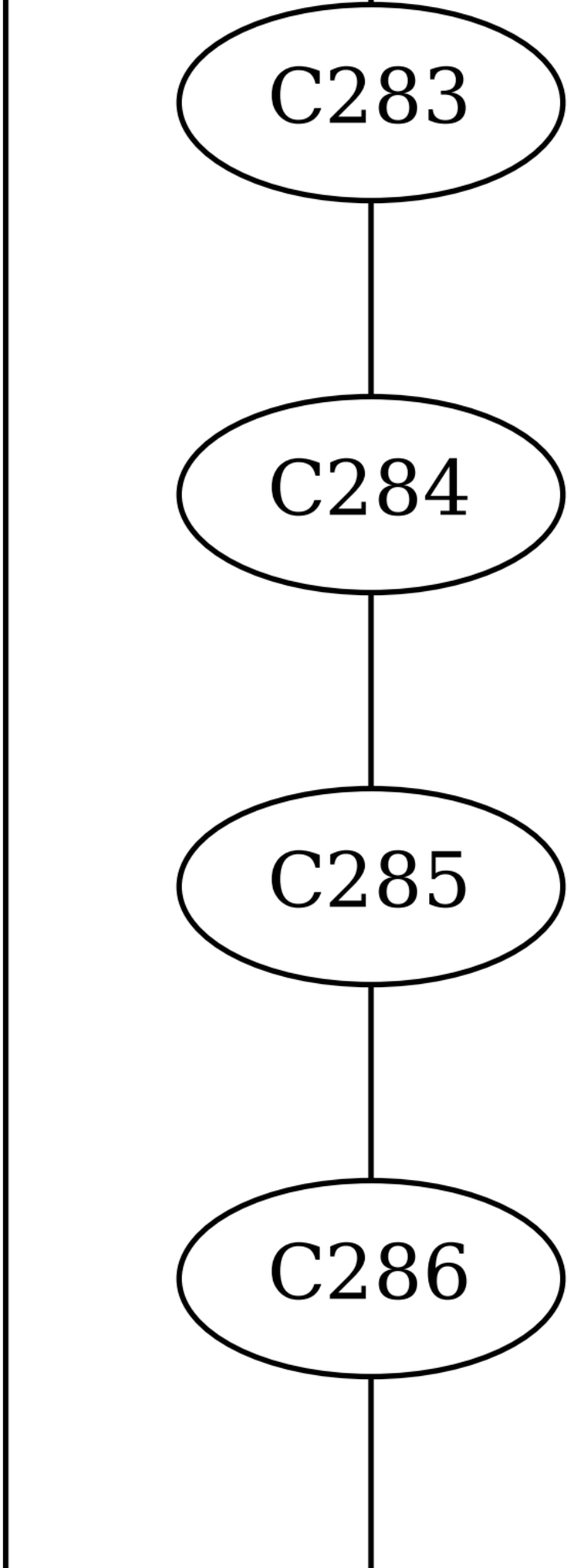
C283
C284
C285
C286

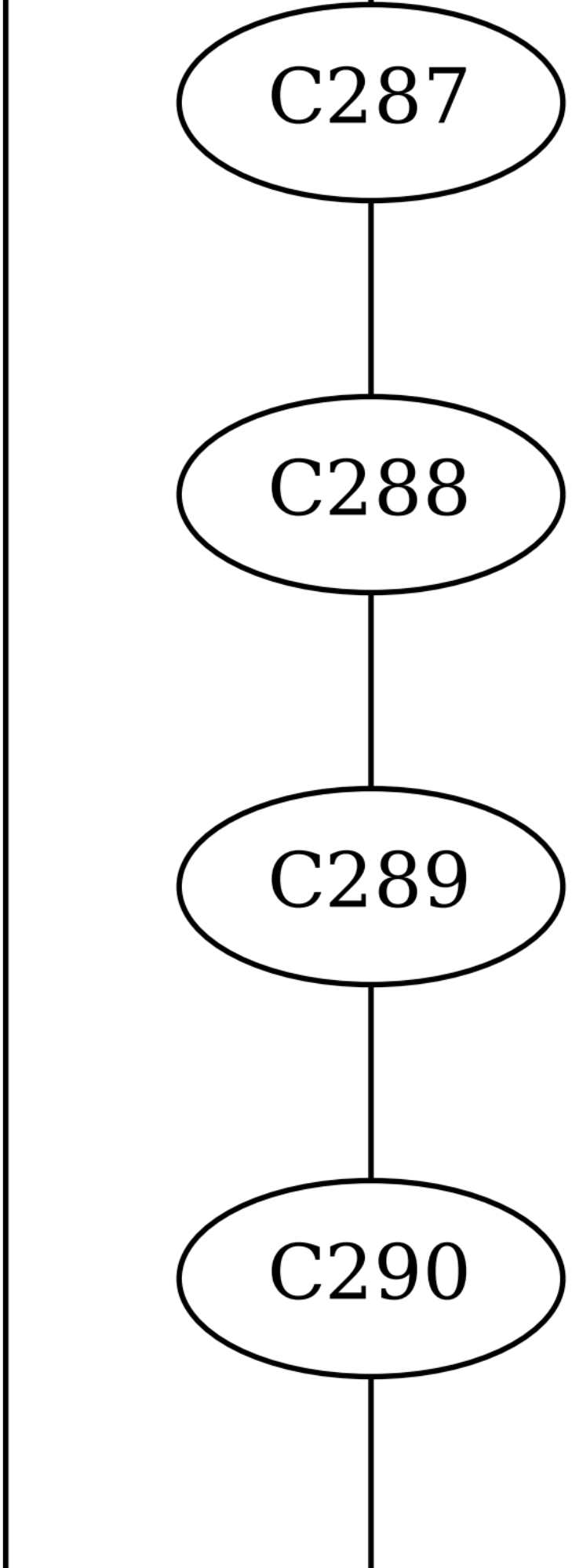
C287
C288
C289
C290

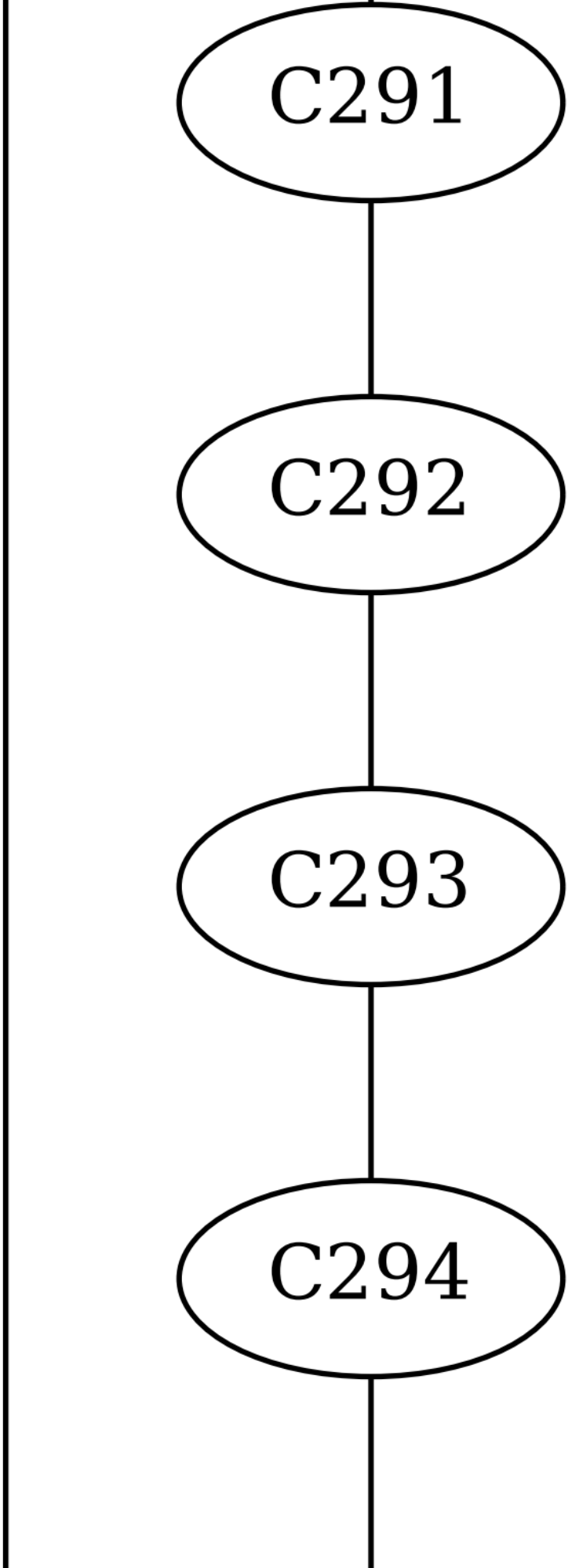
C291
C292
C293
C294

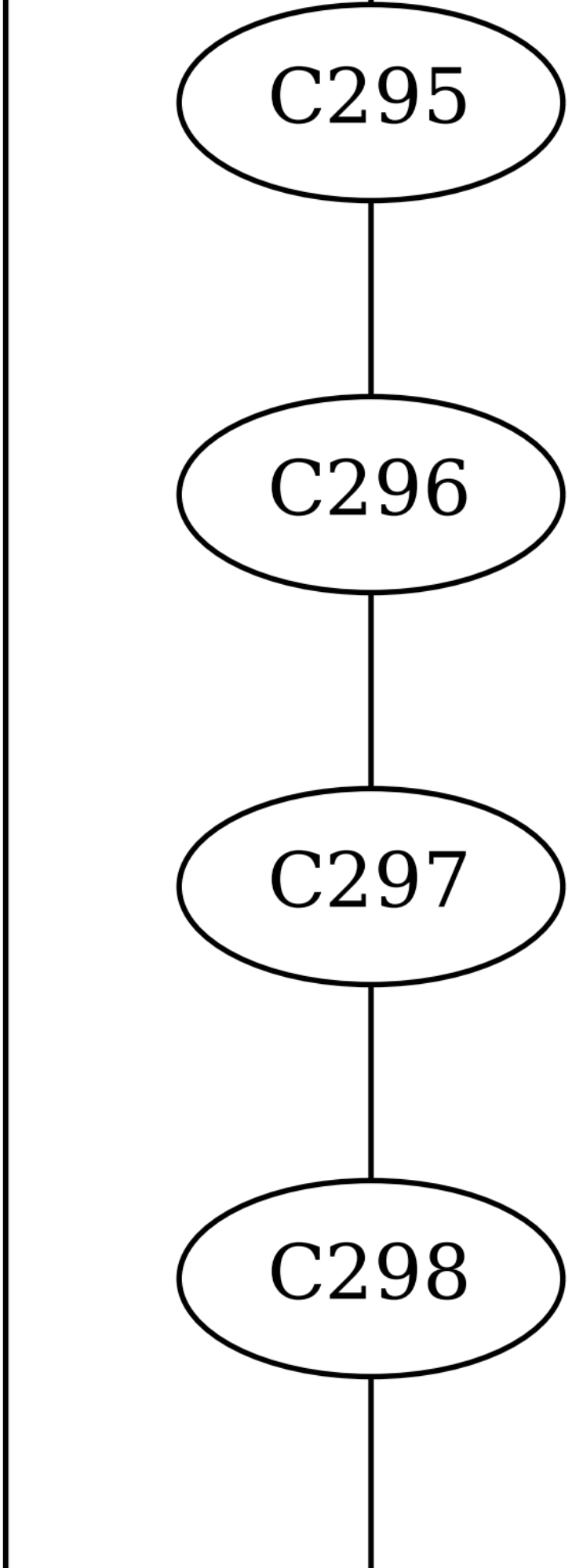
C295
C296
C297
C298

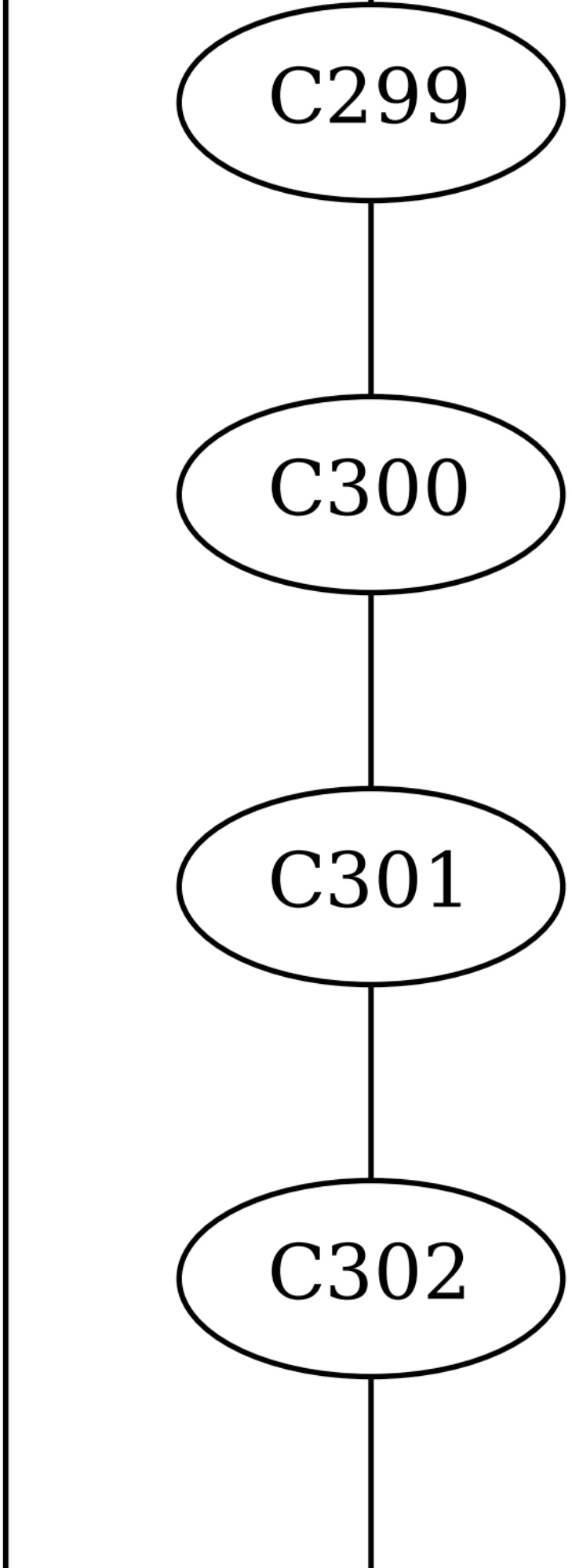
C299
C300
C301
C302

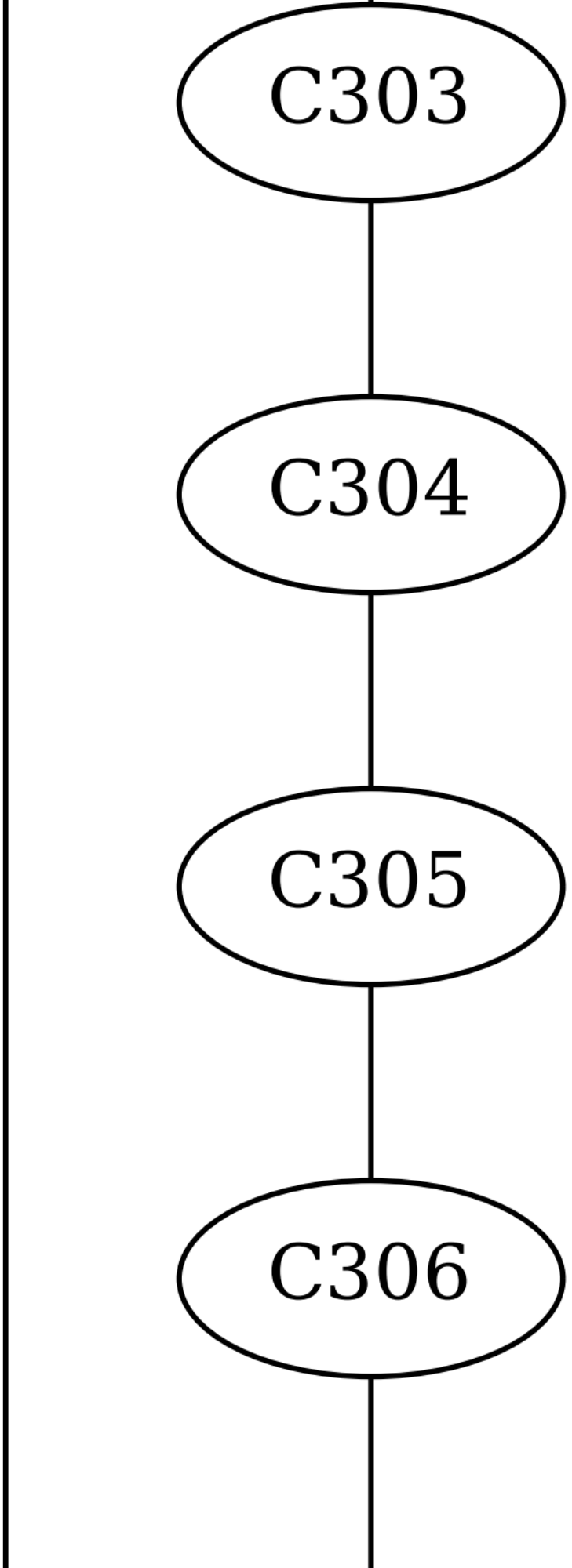
C303
C304
C305
C306

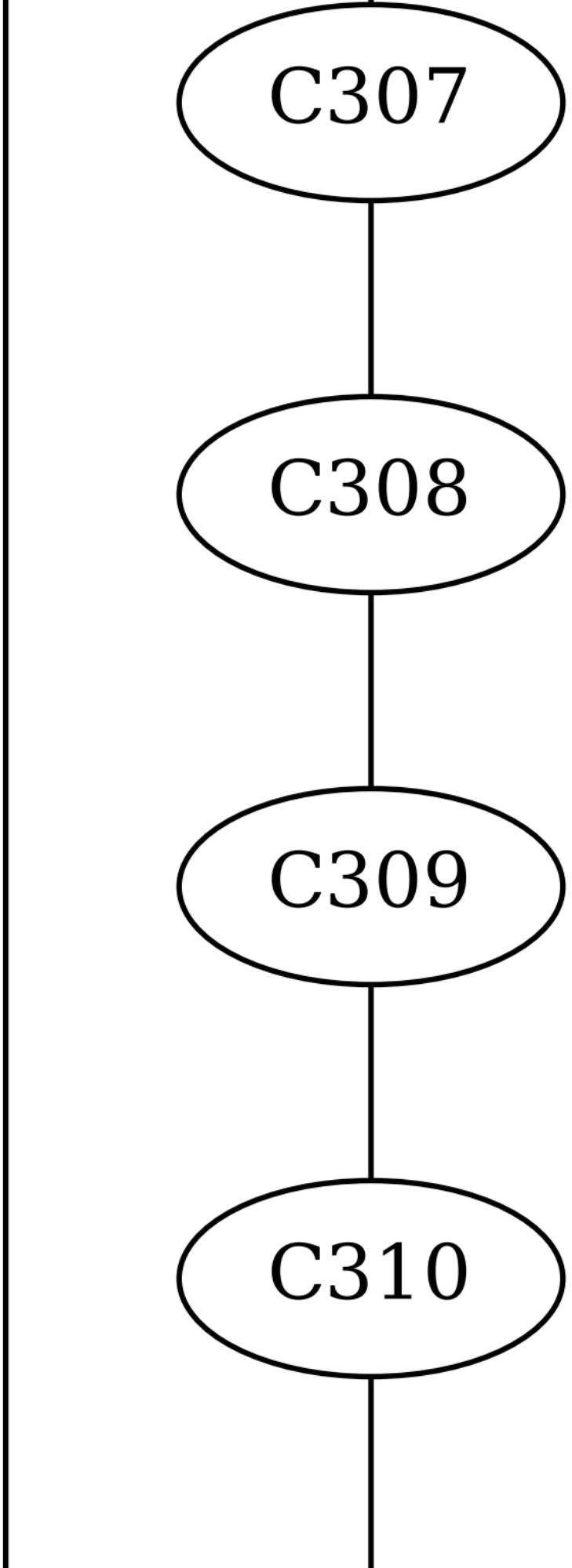
C307
C308
C309
C310

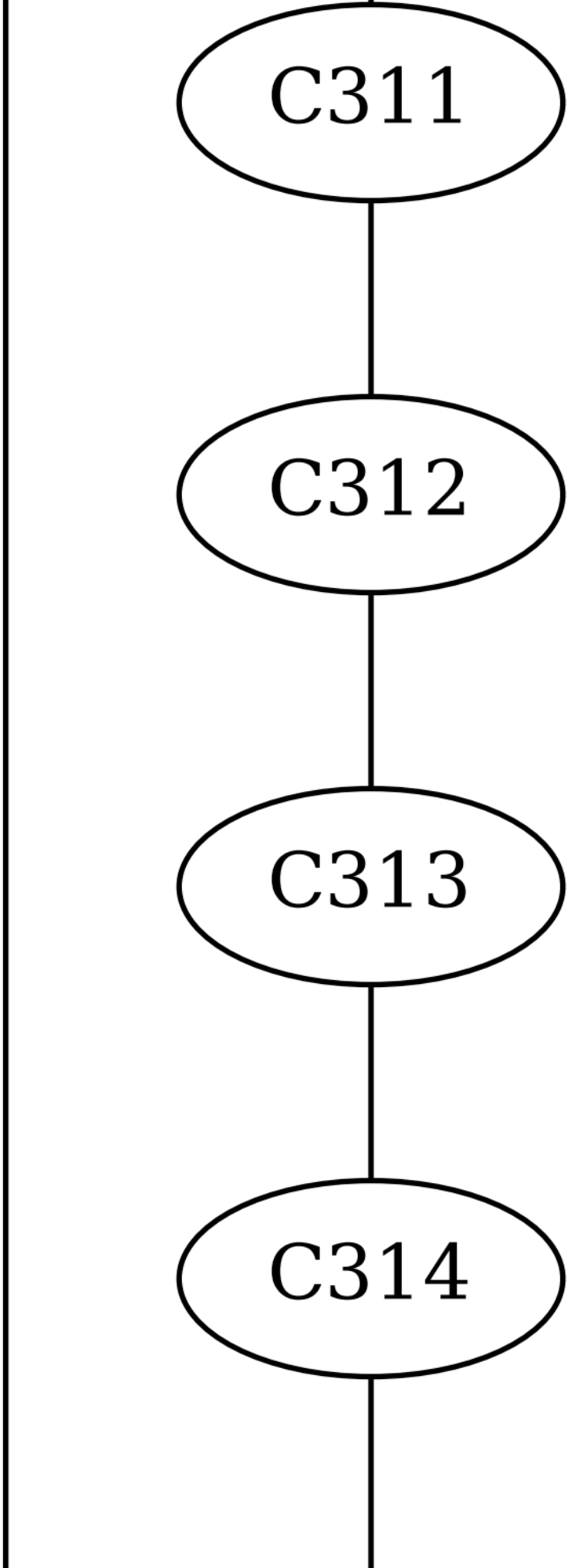
C311
C312
C313
C314

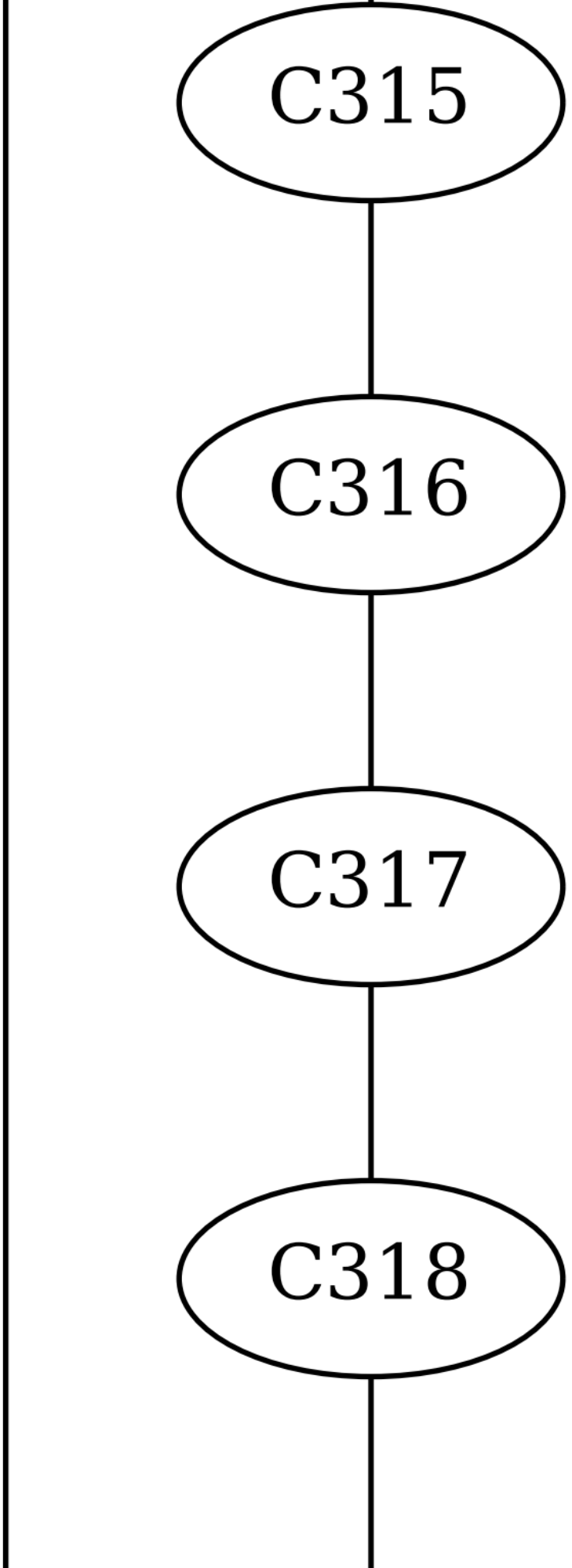
C315
C316
C317
C318

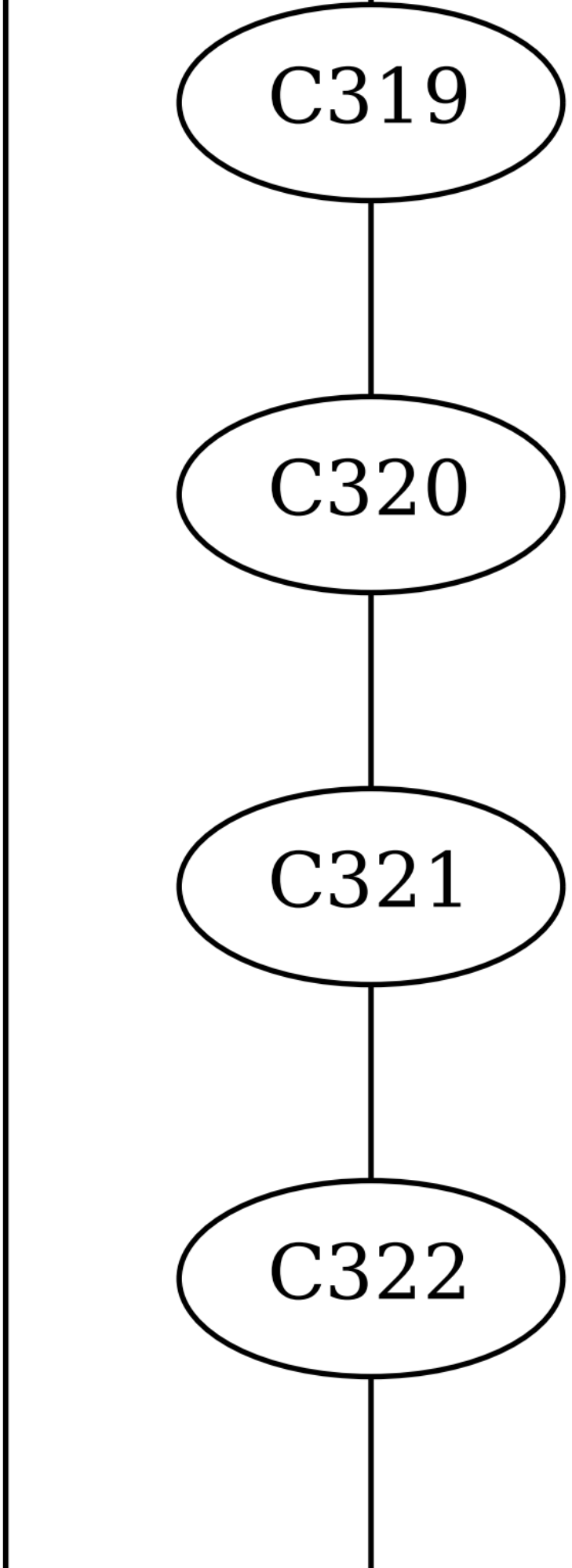
C319
C320
C321
C322

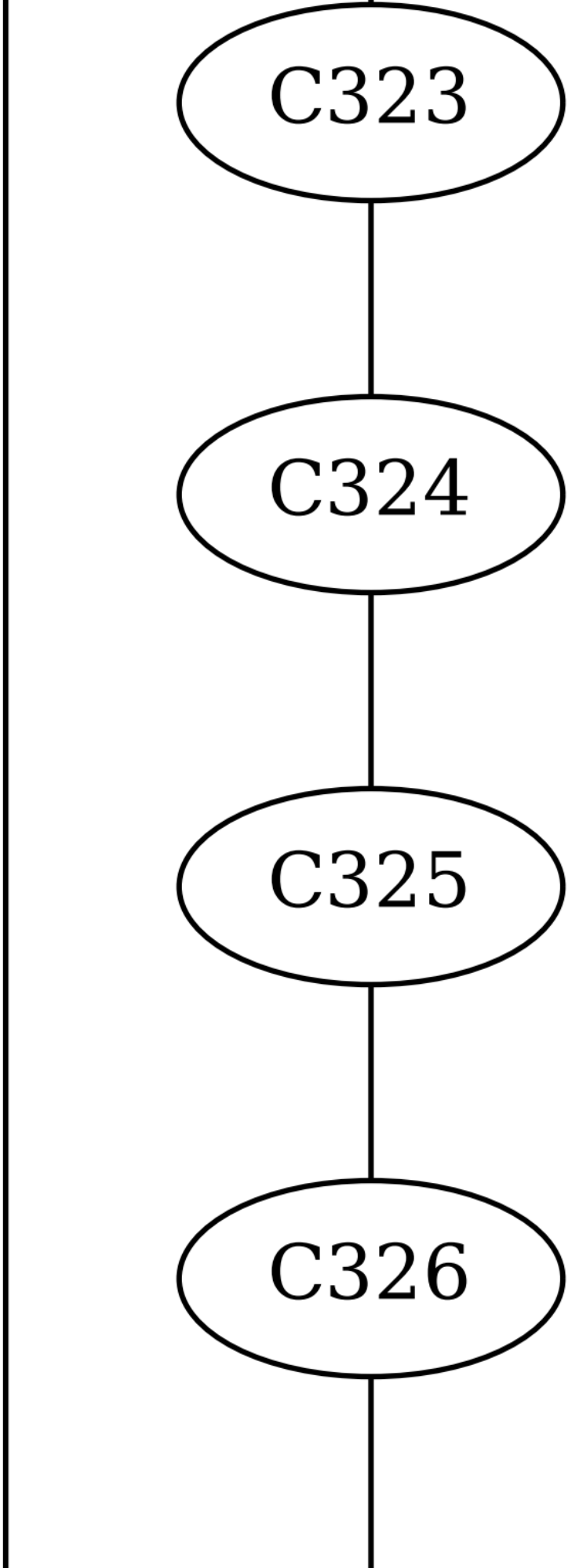
C323
C324
C325
C326

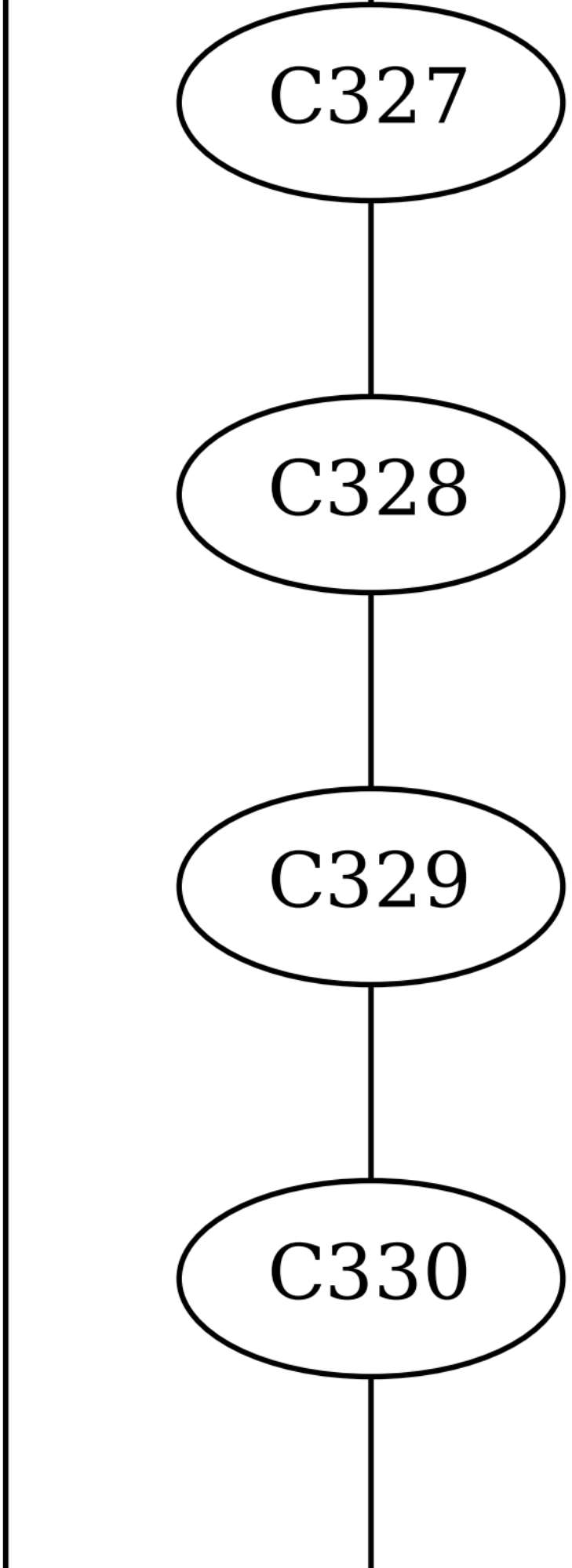
C327
C328
C329
C330

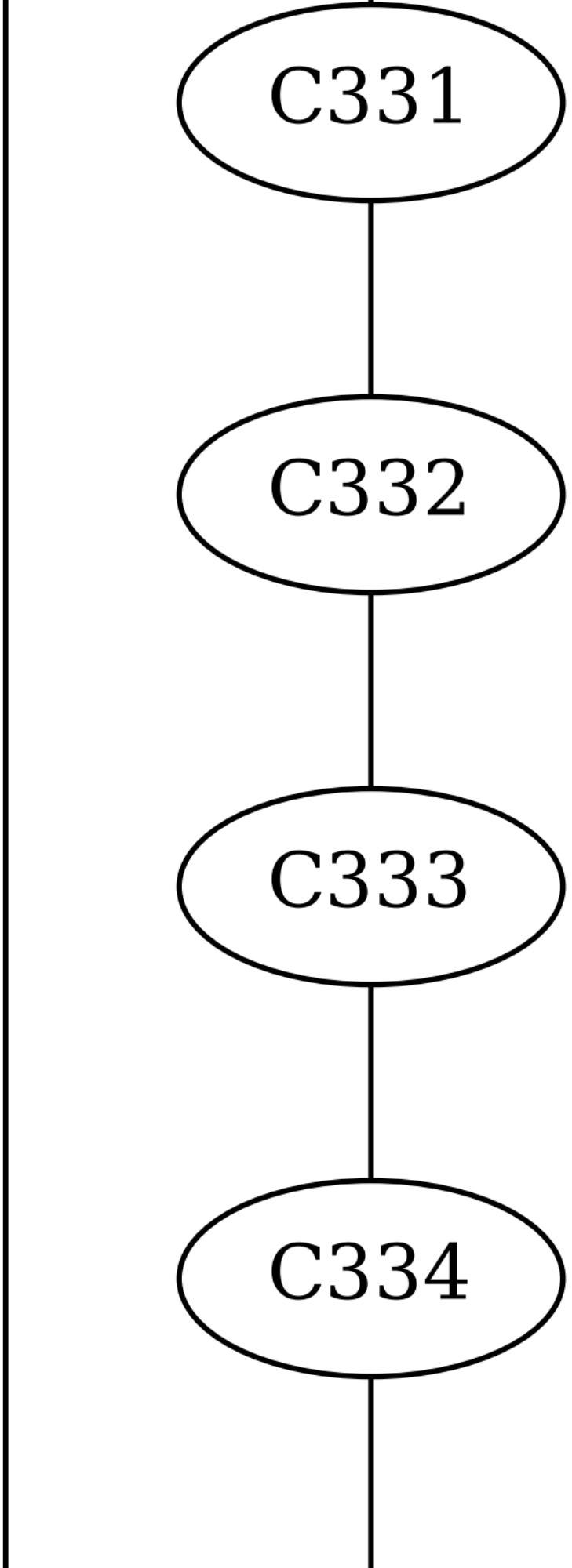
C331
C332
C333
C334

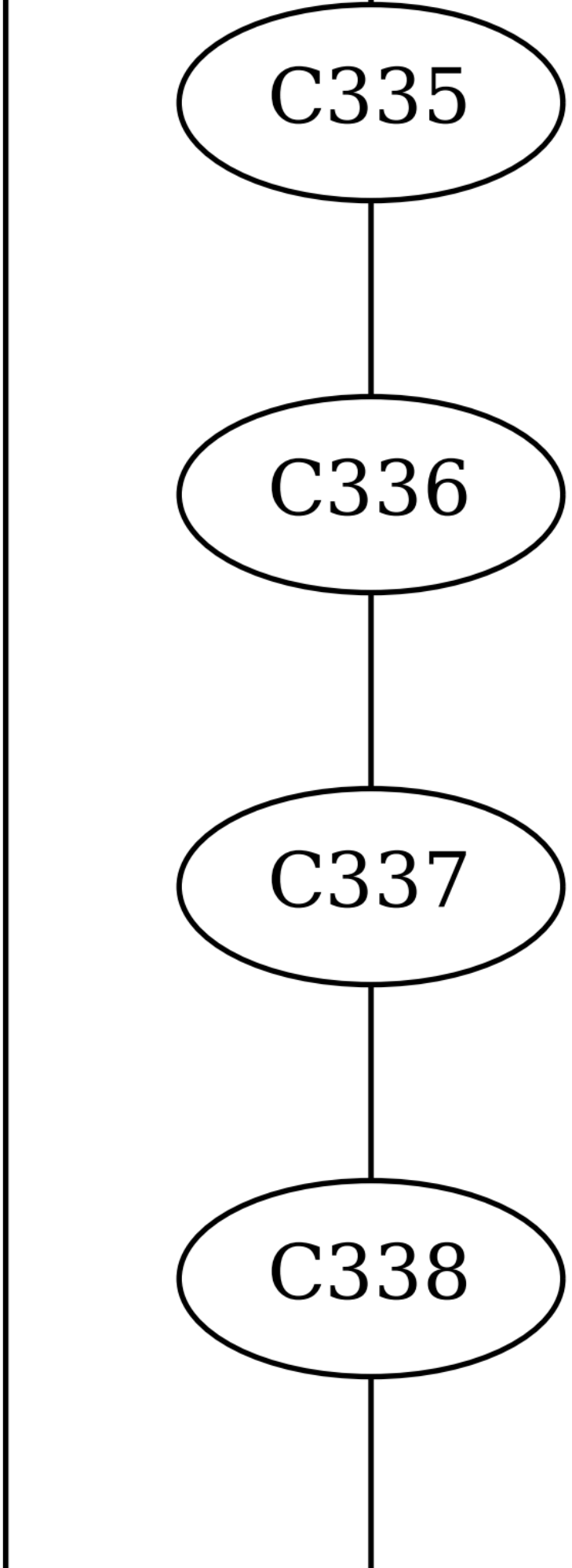
C335
C336
C337
C338

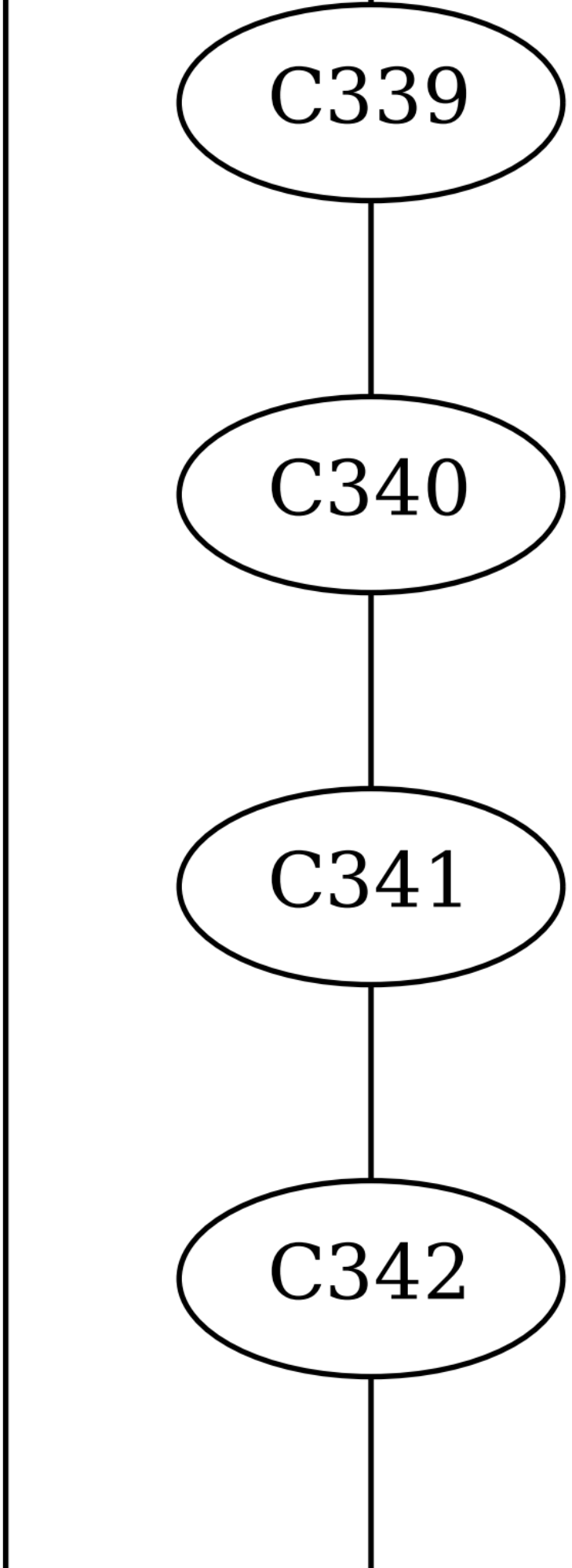
C339
C340
C341
C342

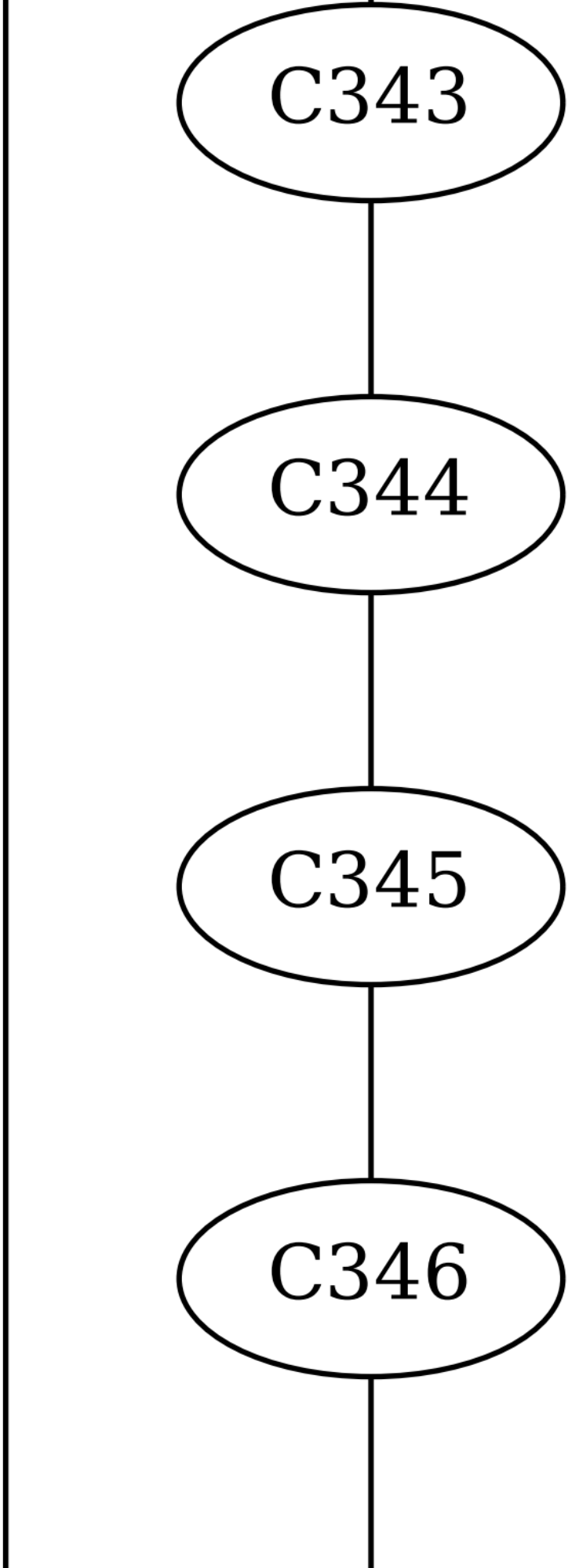
C343
C344
C345
C346

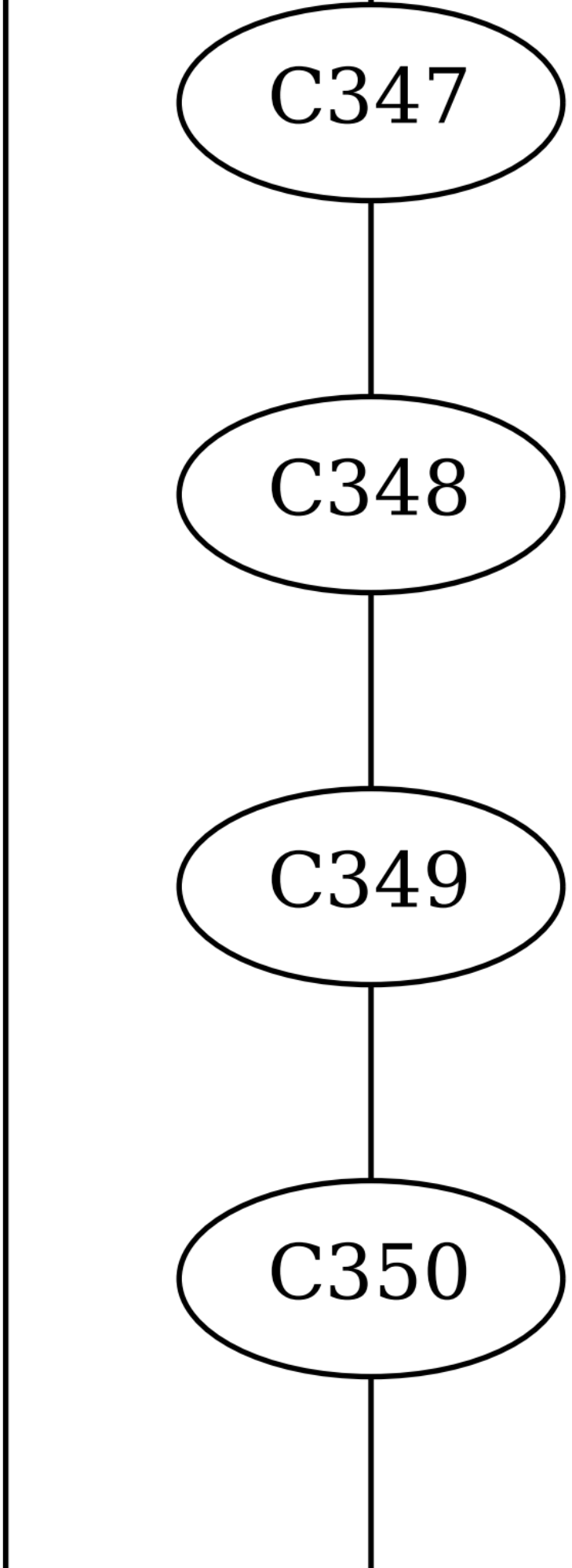
C347
C348
C349
C350

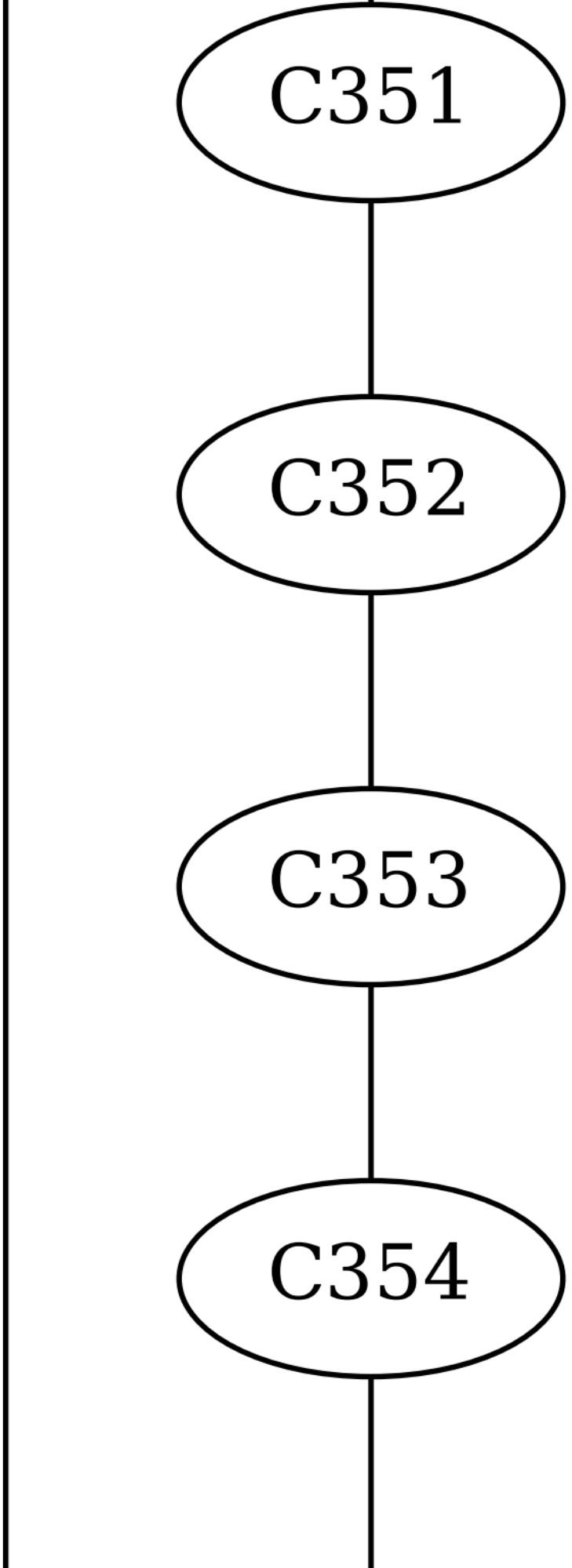
C351
C352
C353
C354

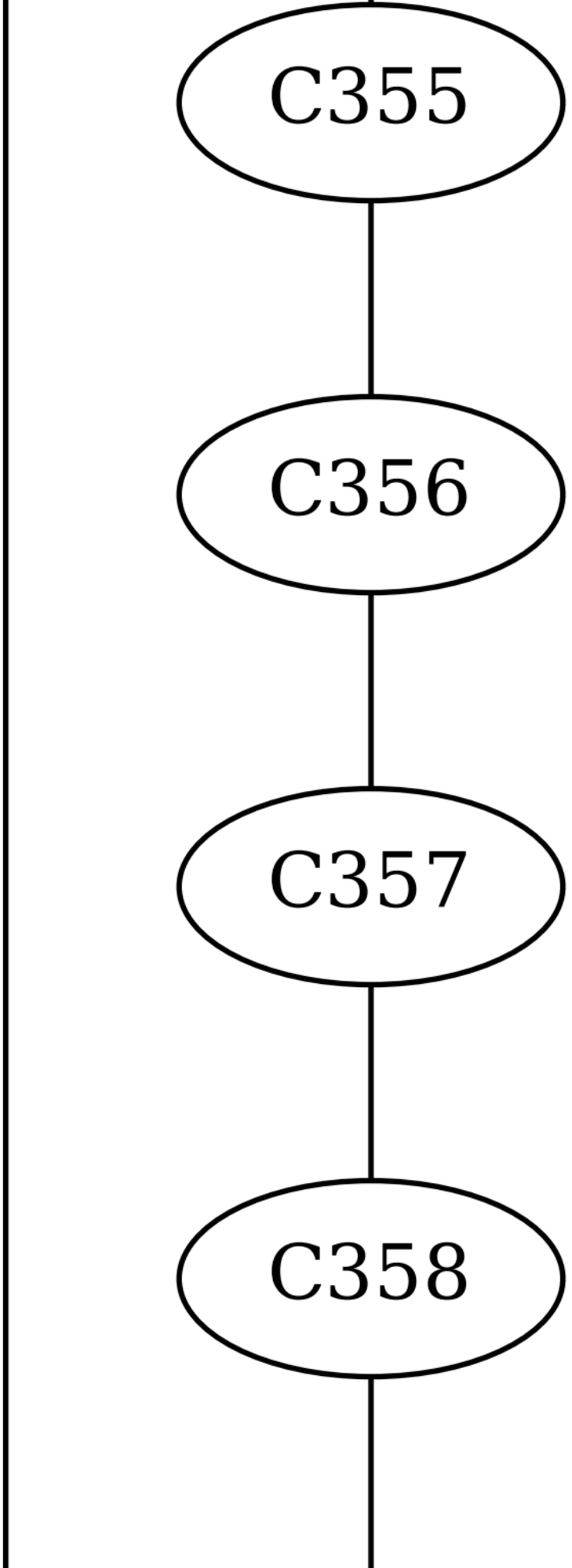
C355
C356
C357
C358

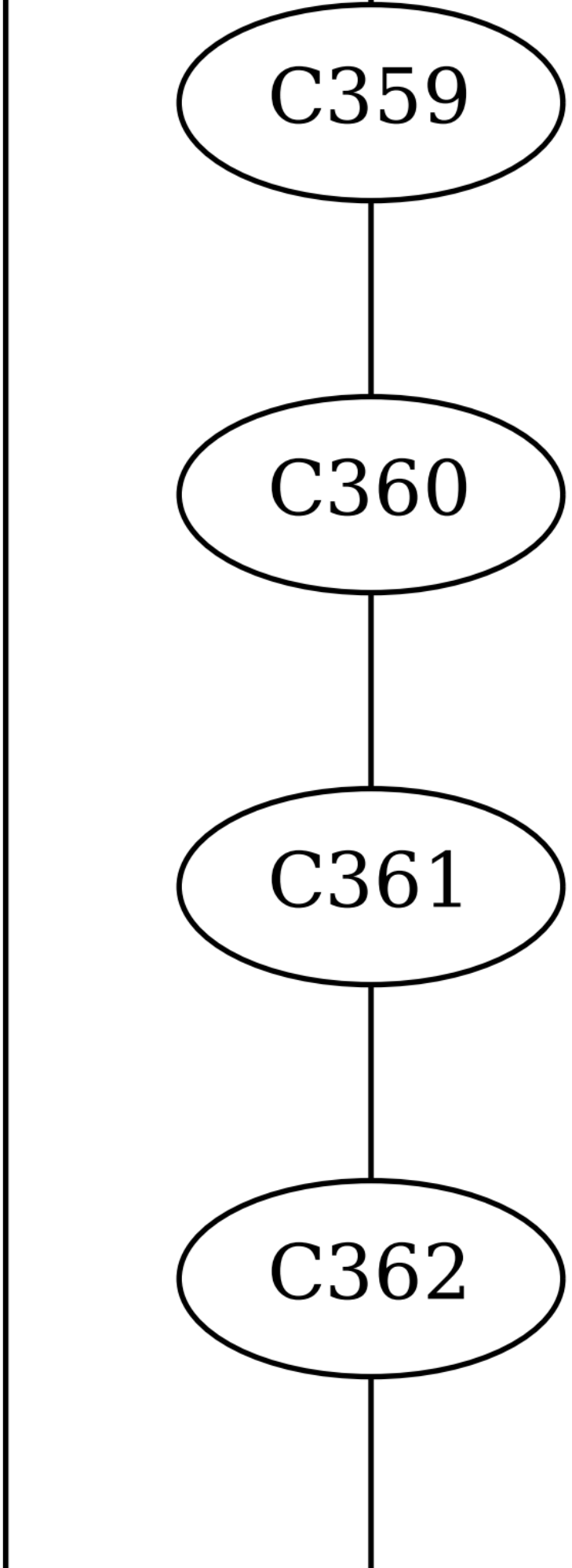
C359
C360
C361
C362

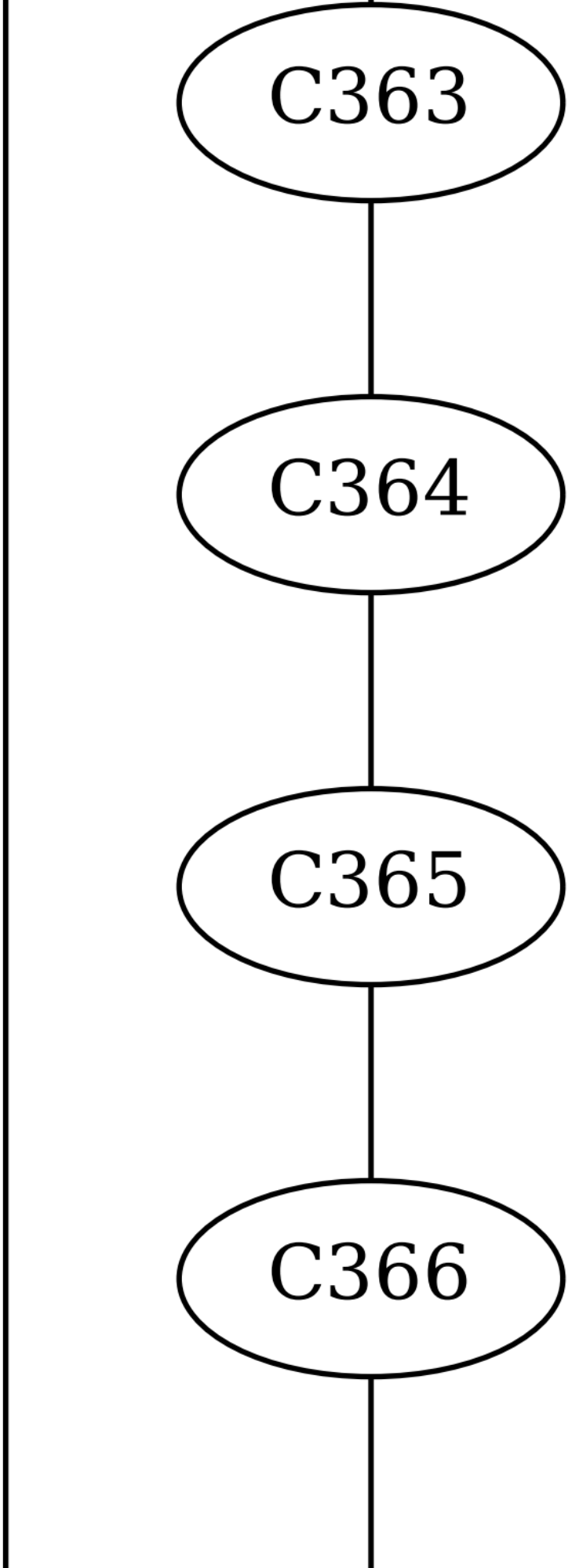
C363
C364
C365
C366

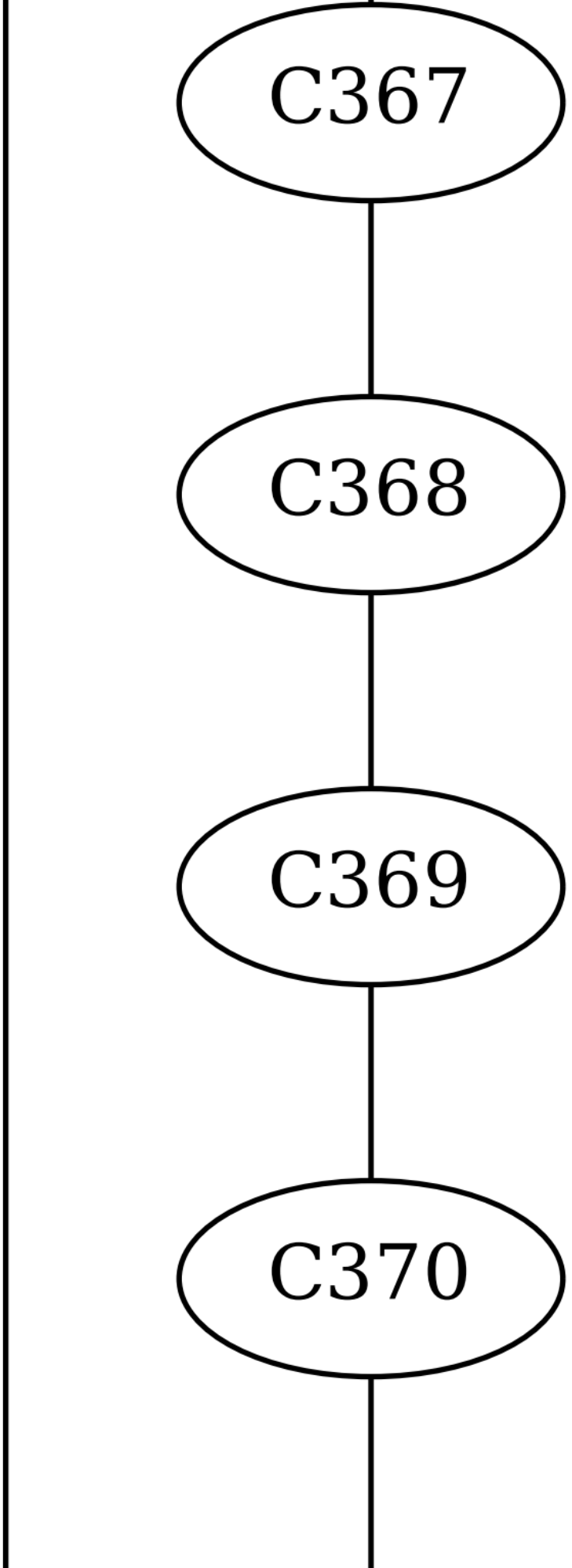
C367
C368
C369
C370

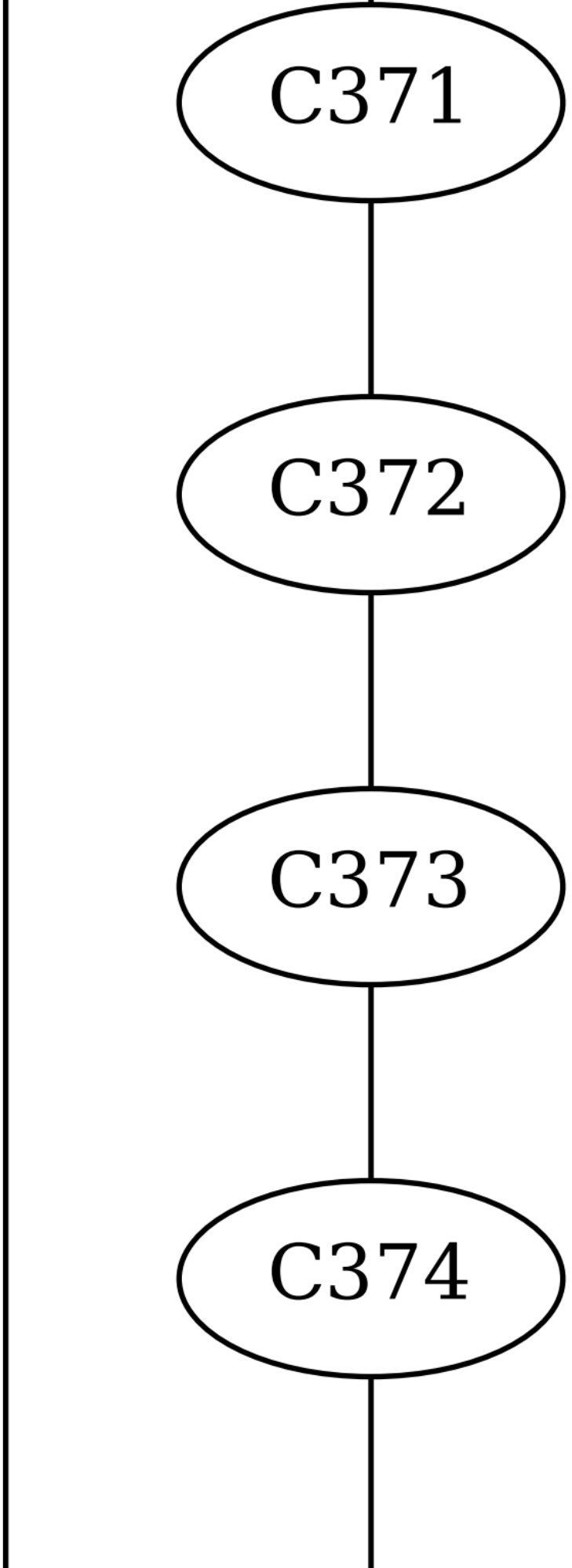
C371
C372
C373
C374

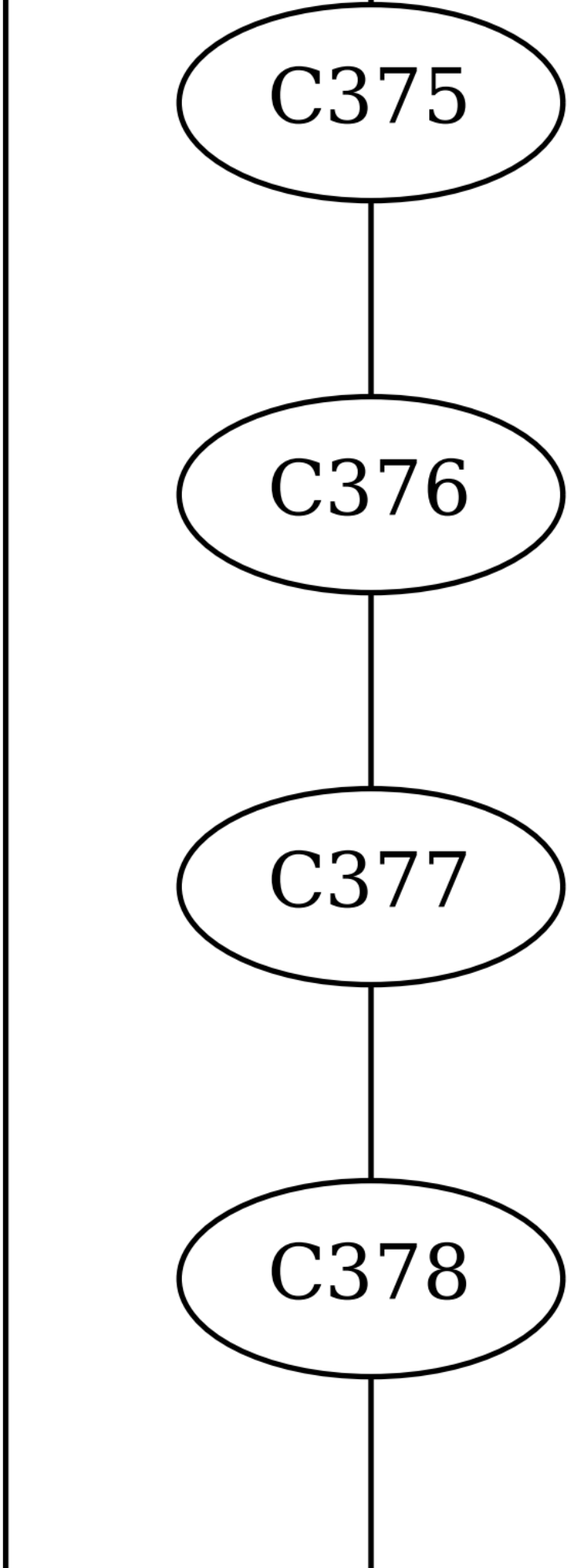
C375
C376
C377
C378

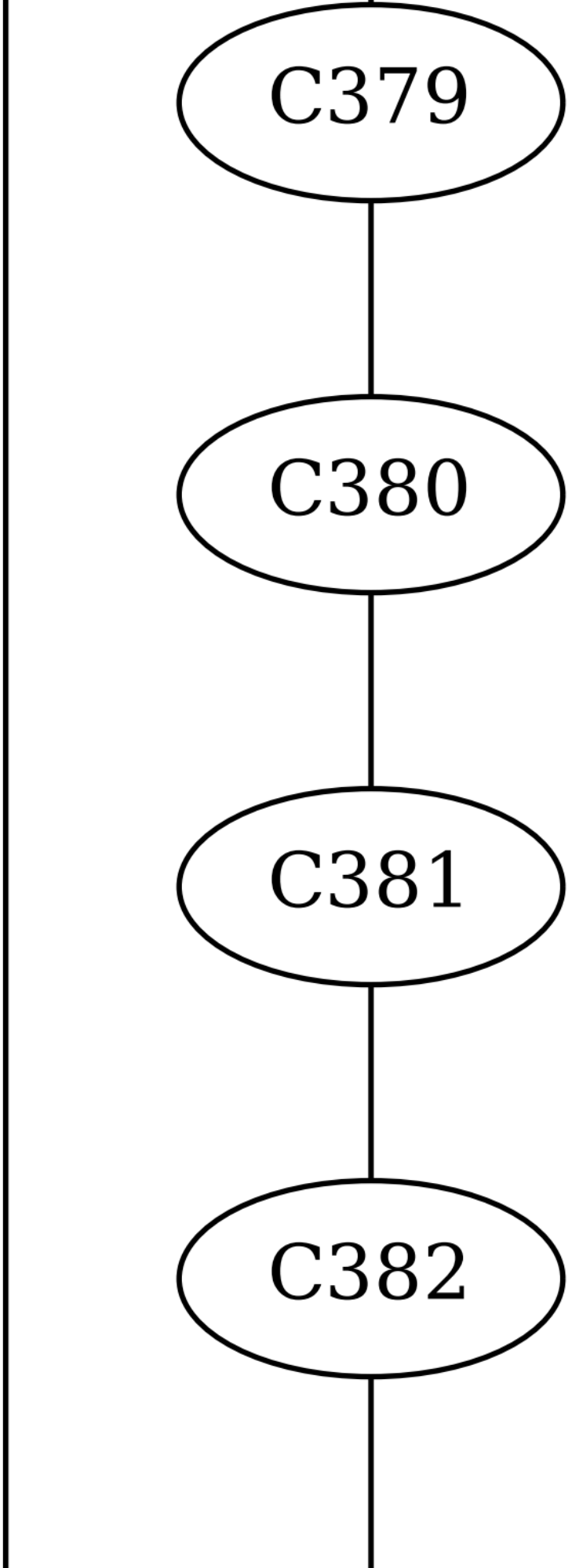
C379
C380
C381
C382

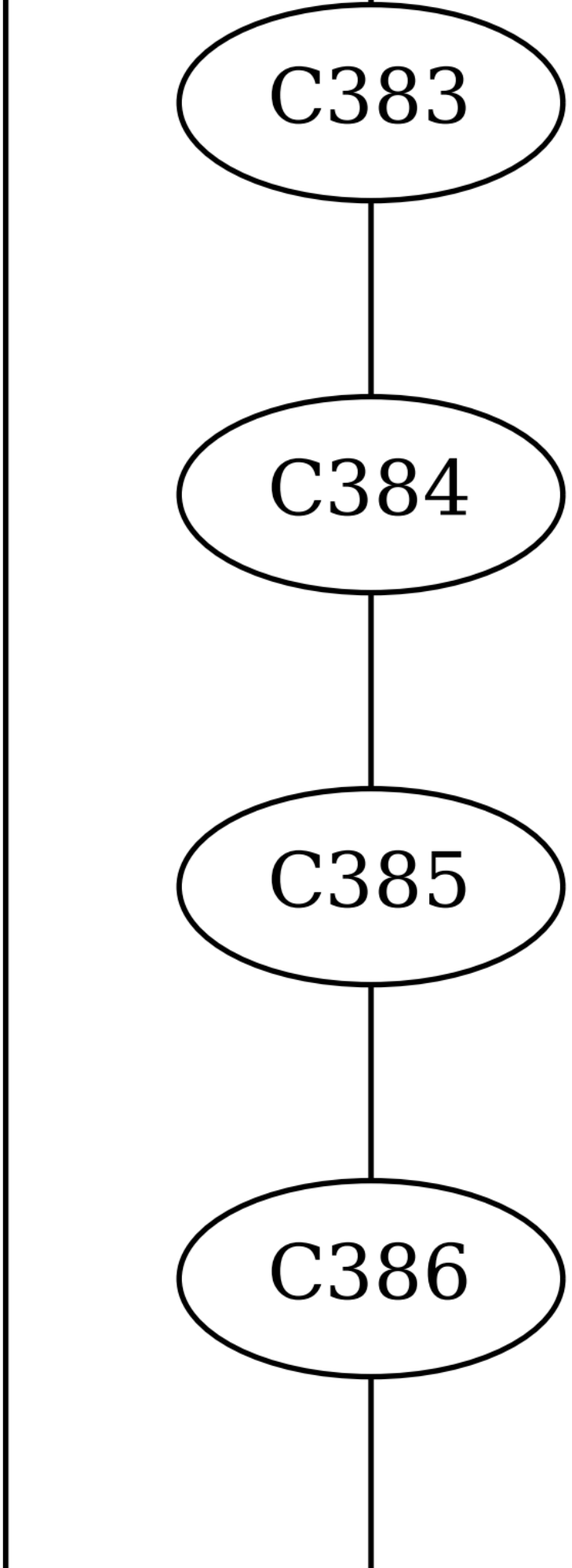
C383
C384
C385
C386

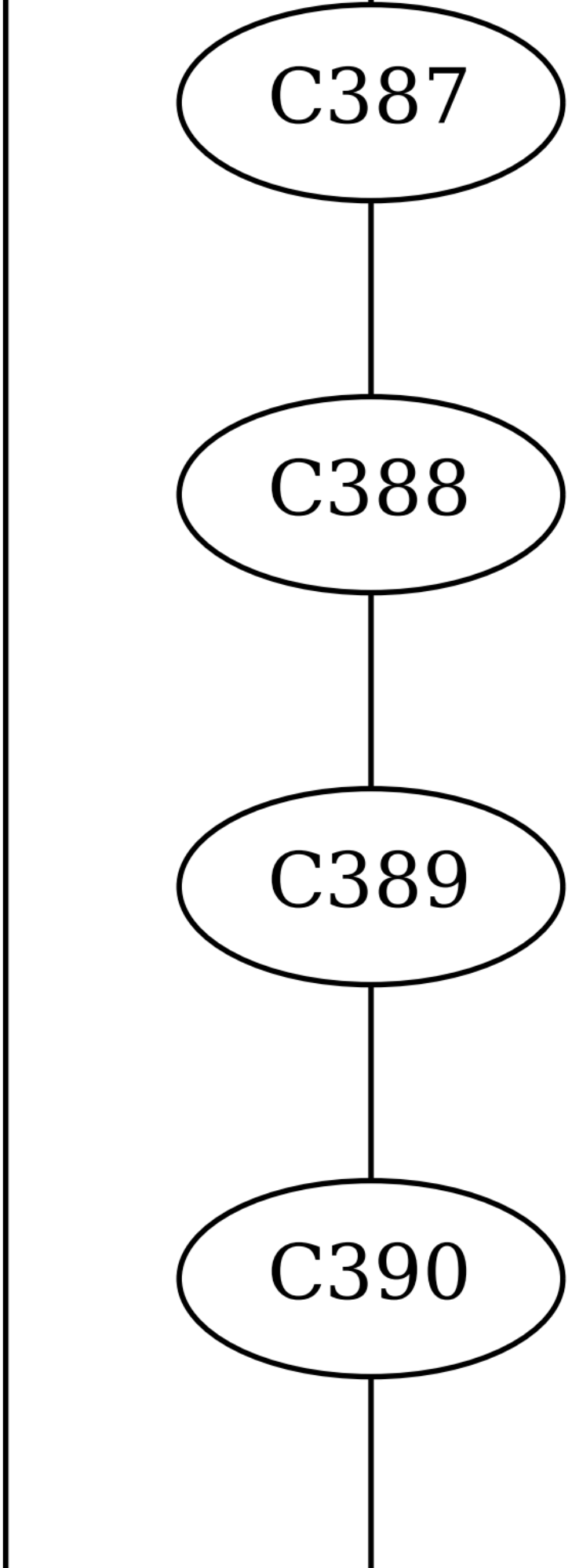
C387
C388
C389
C390

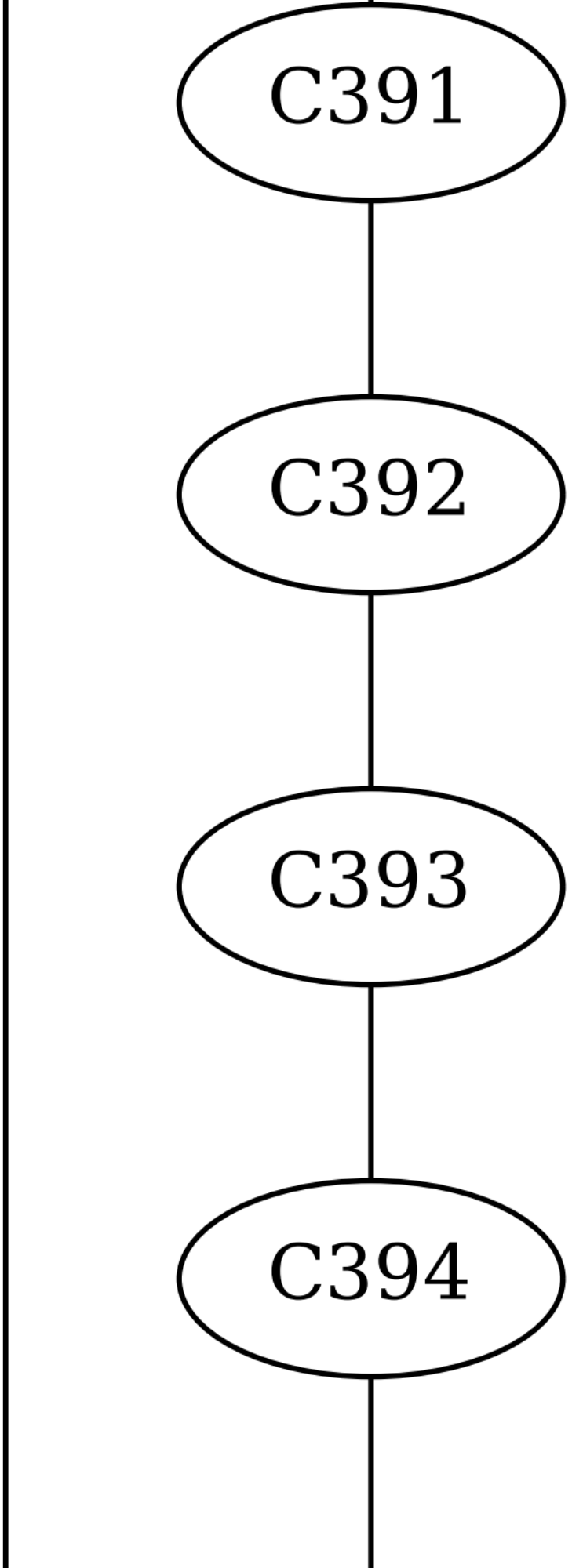
C391
C392
C393
C394

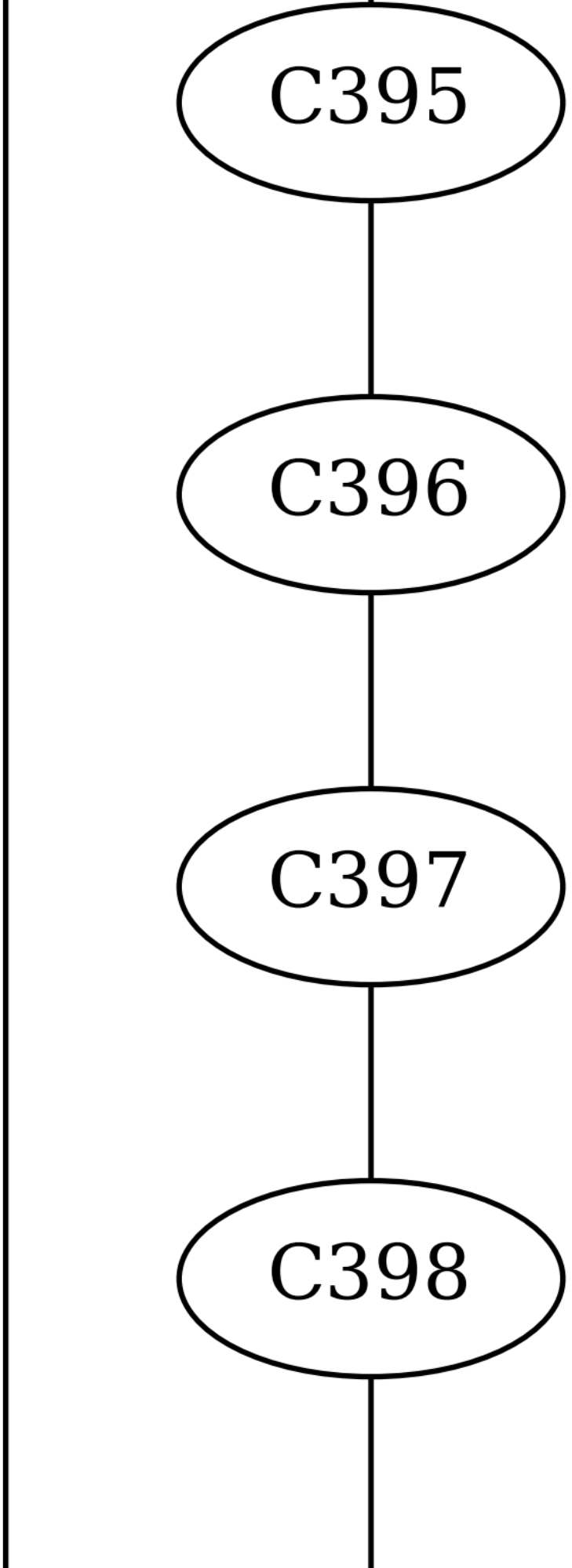
C395
C396
C397
C398

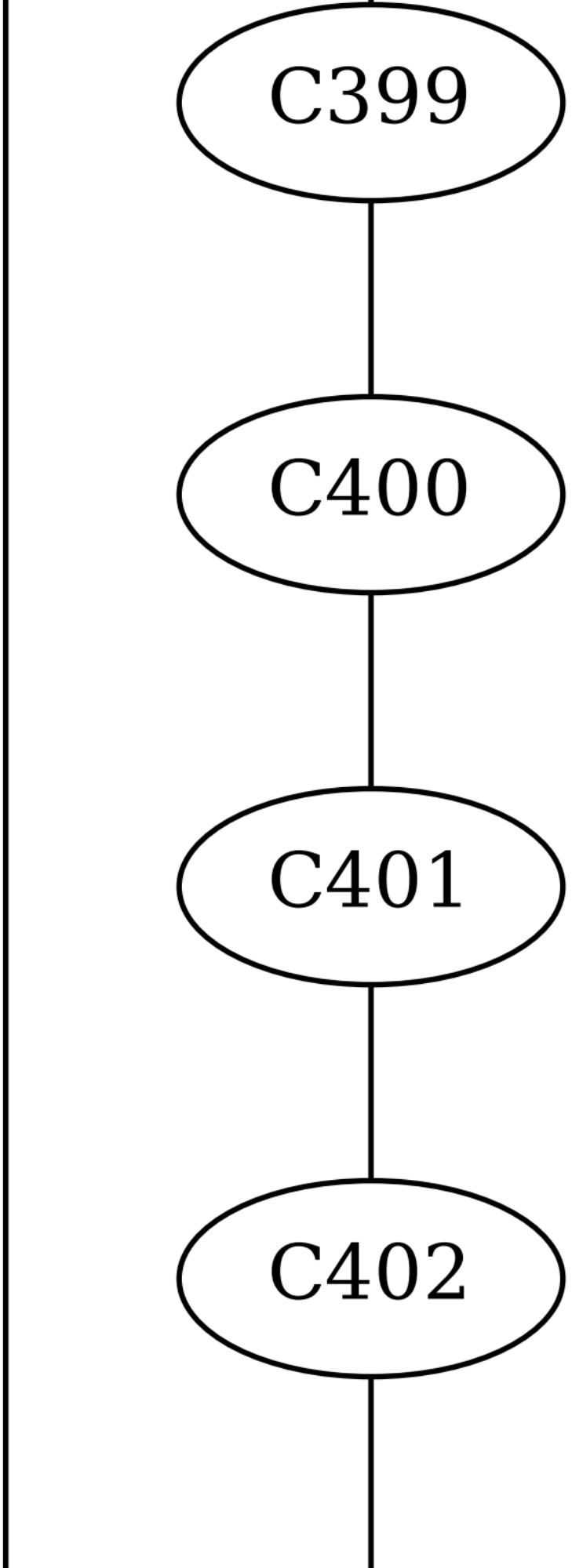
C399
C400
C401
C402

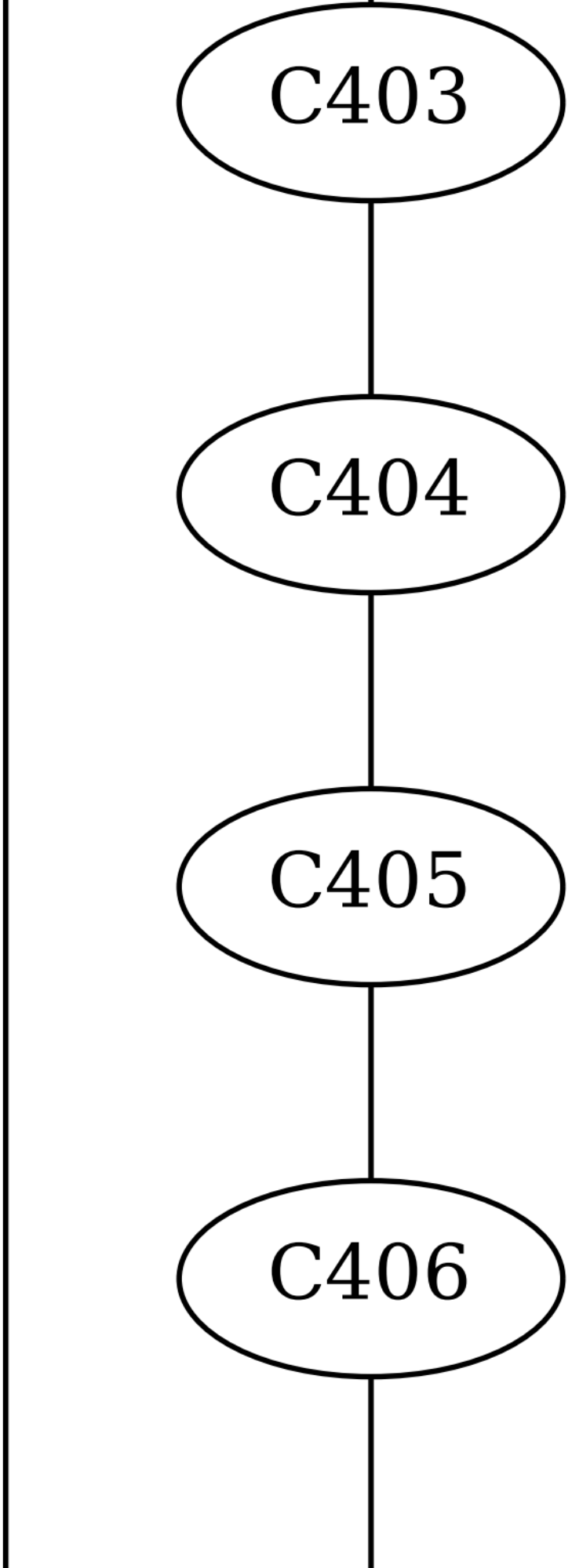
C403
C404
C405
C406

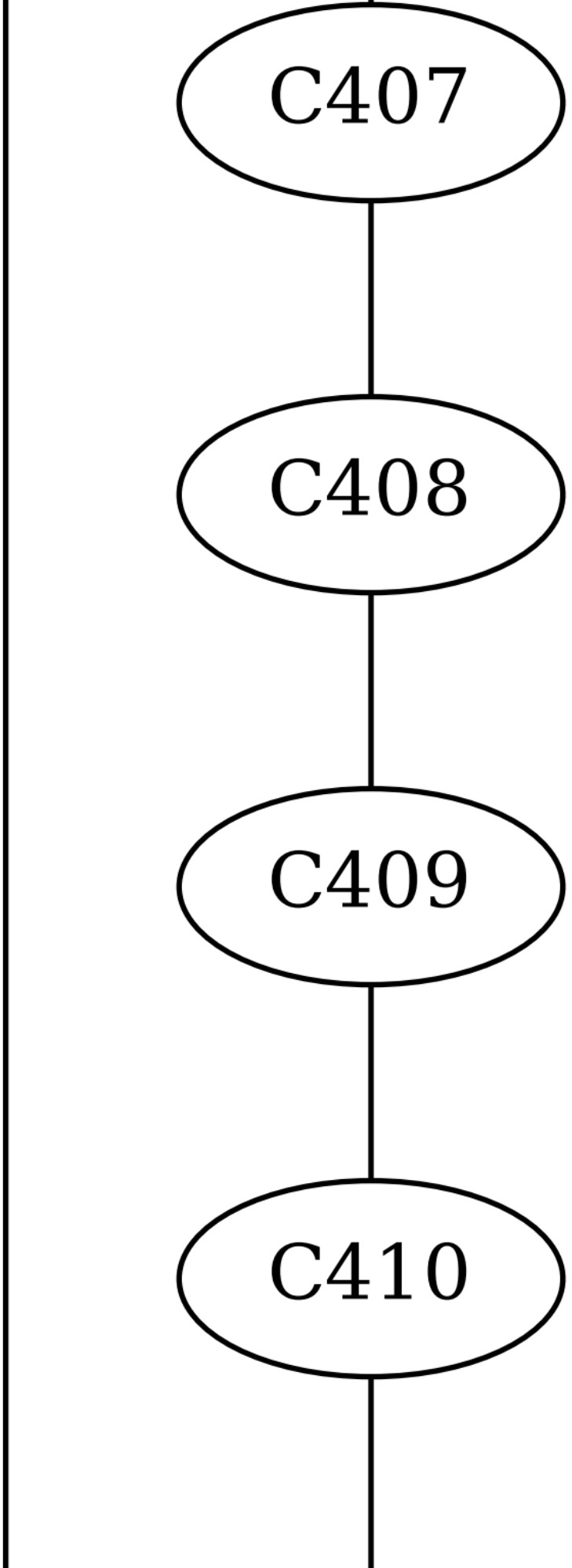
C407
C408
C409
C410

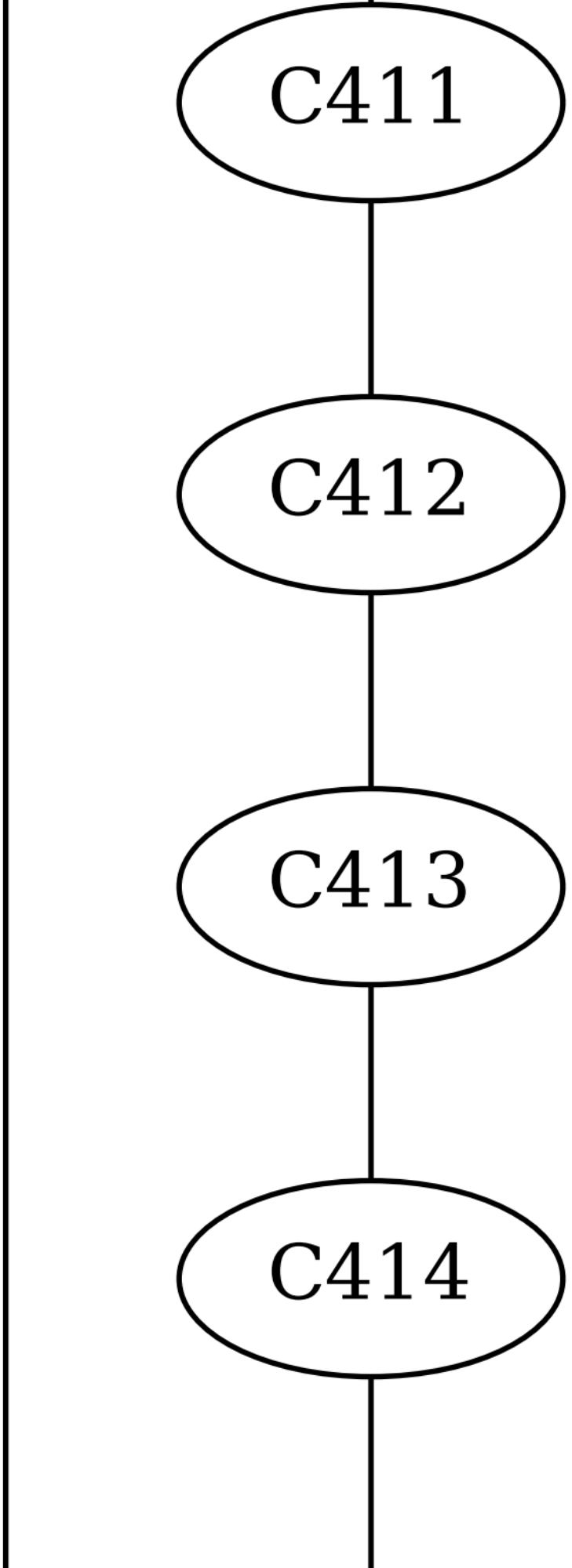
C411
C412
C413
C414

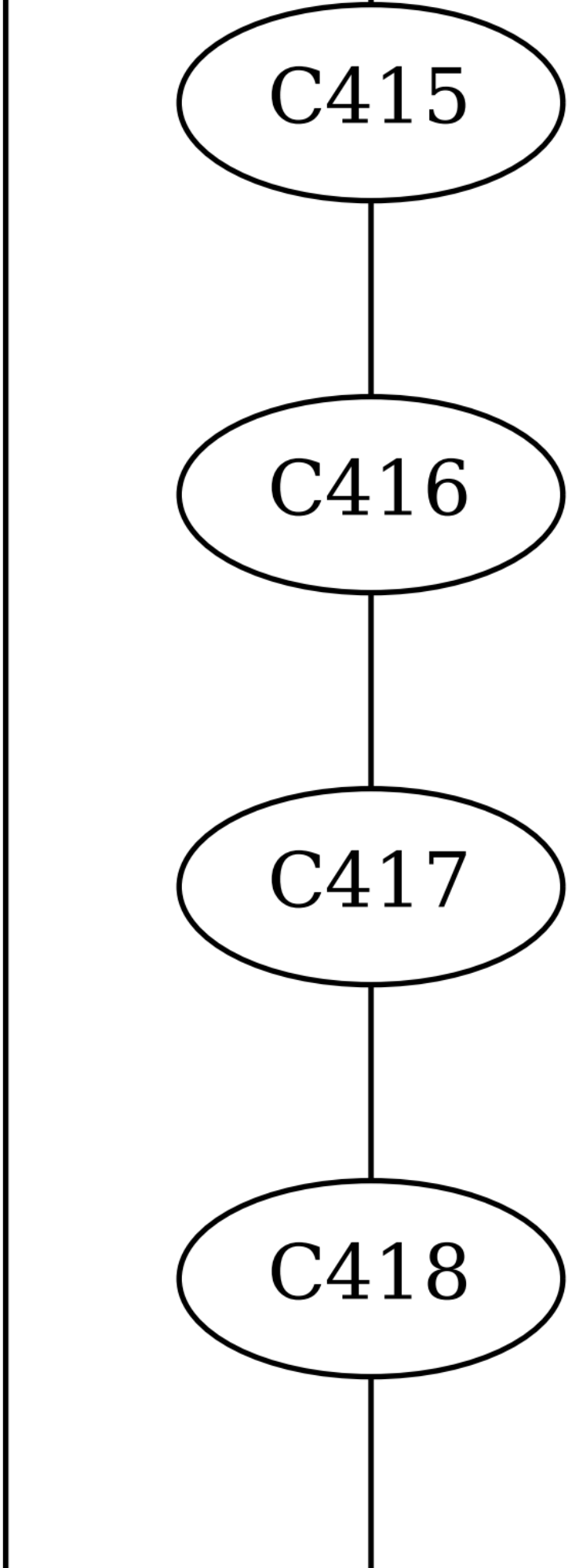
C415
C416
C417
C418

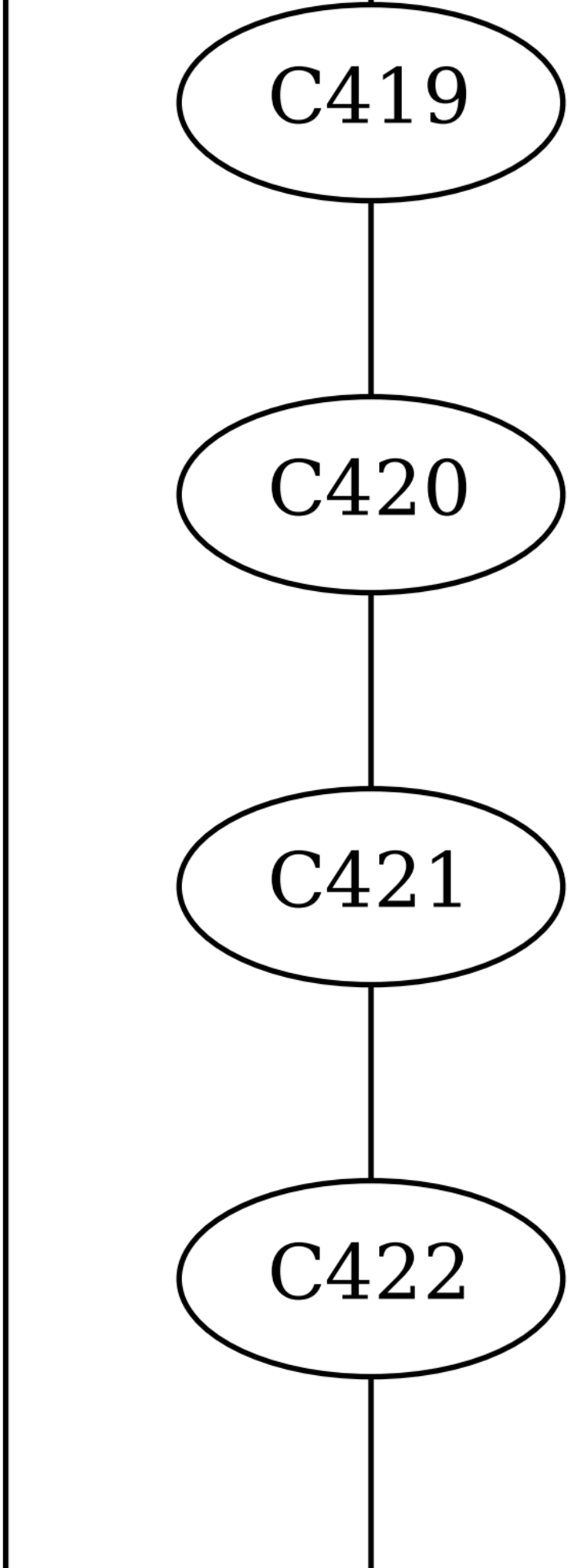
C419
C420
C421
C422

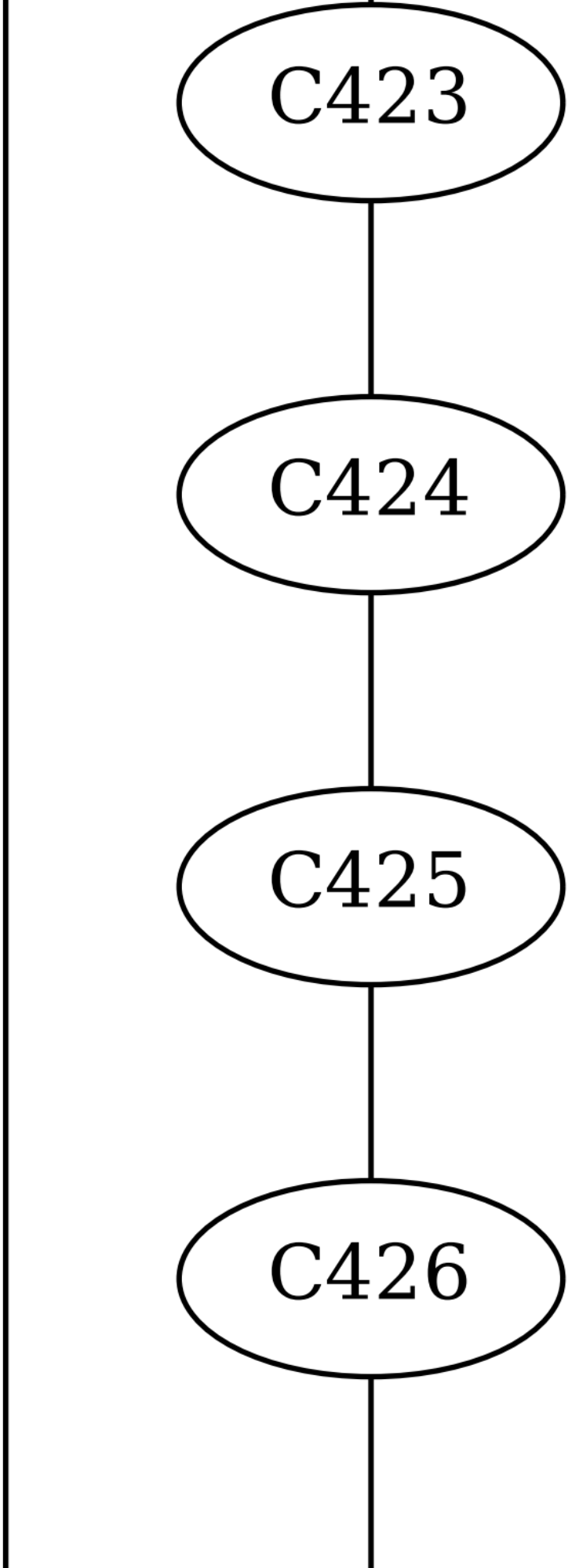
C423
C424
C425
C426

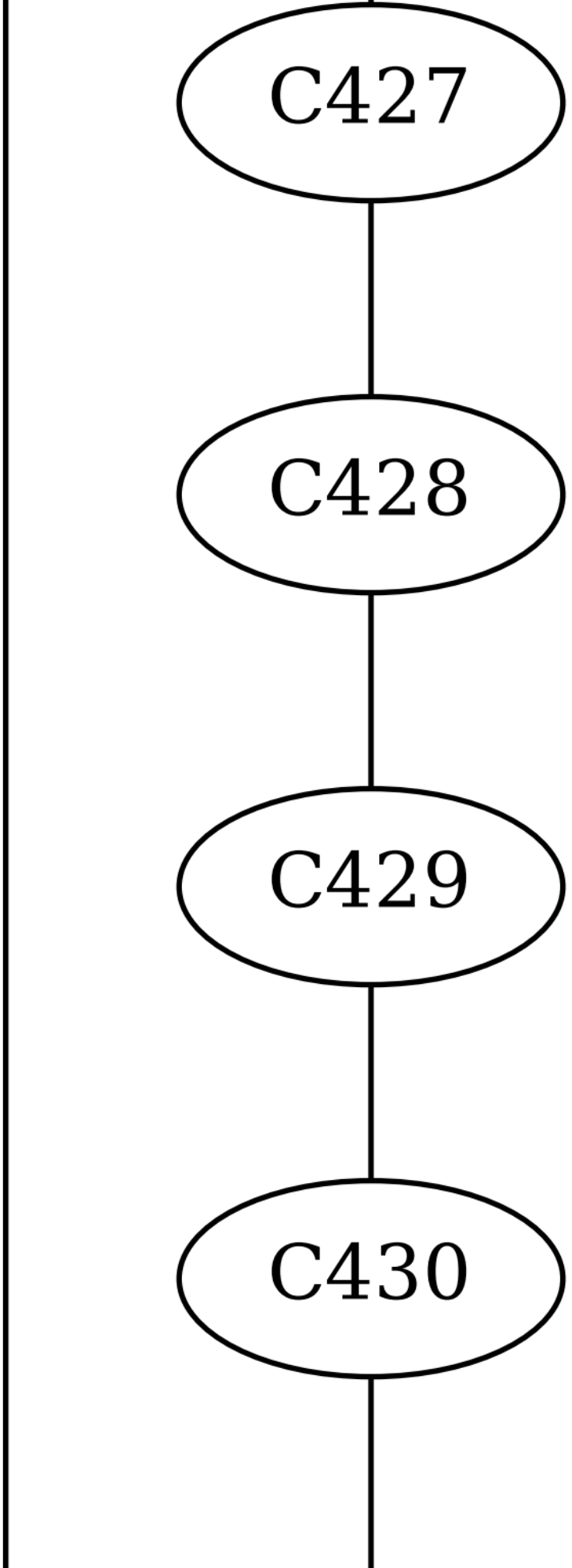
C427
C428
C429
C430

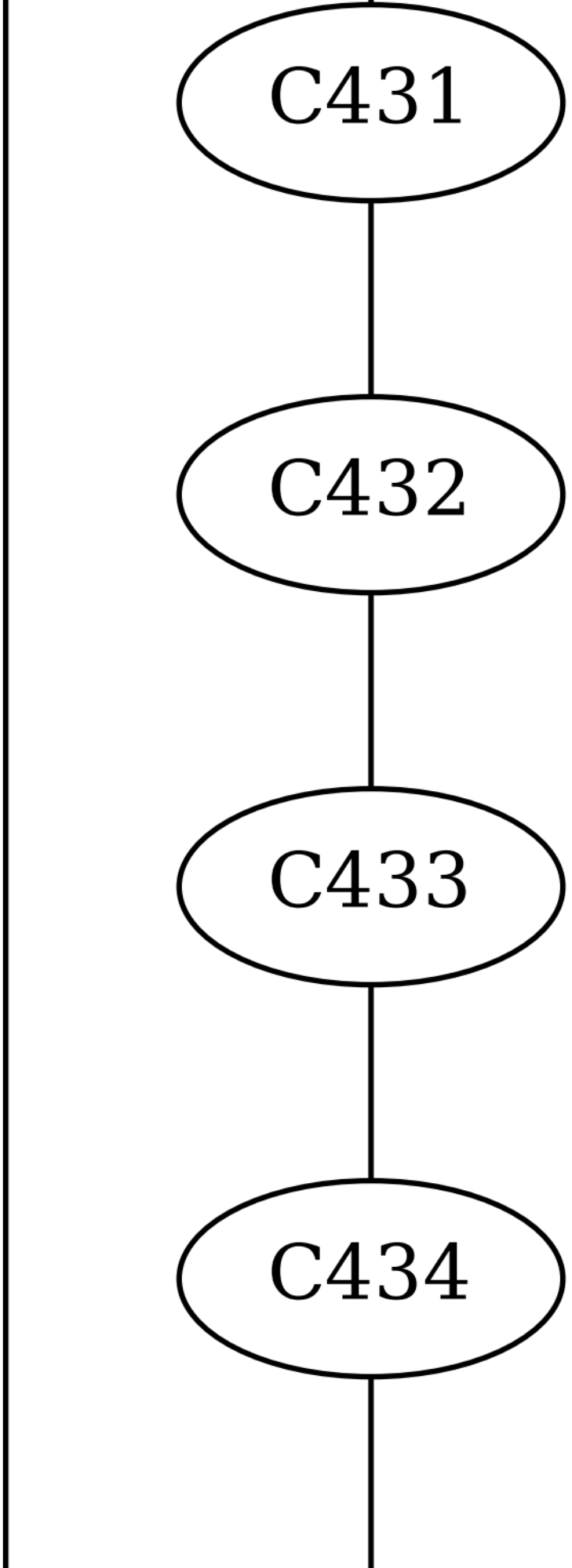
C431
C432
C433
C434

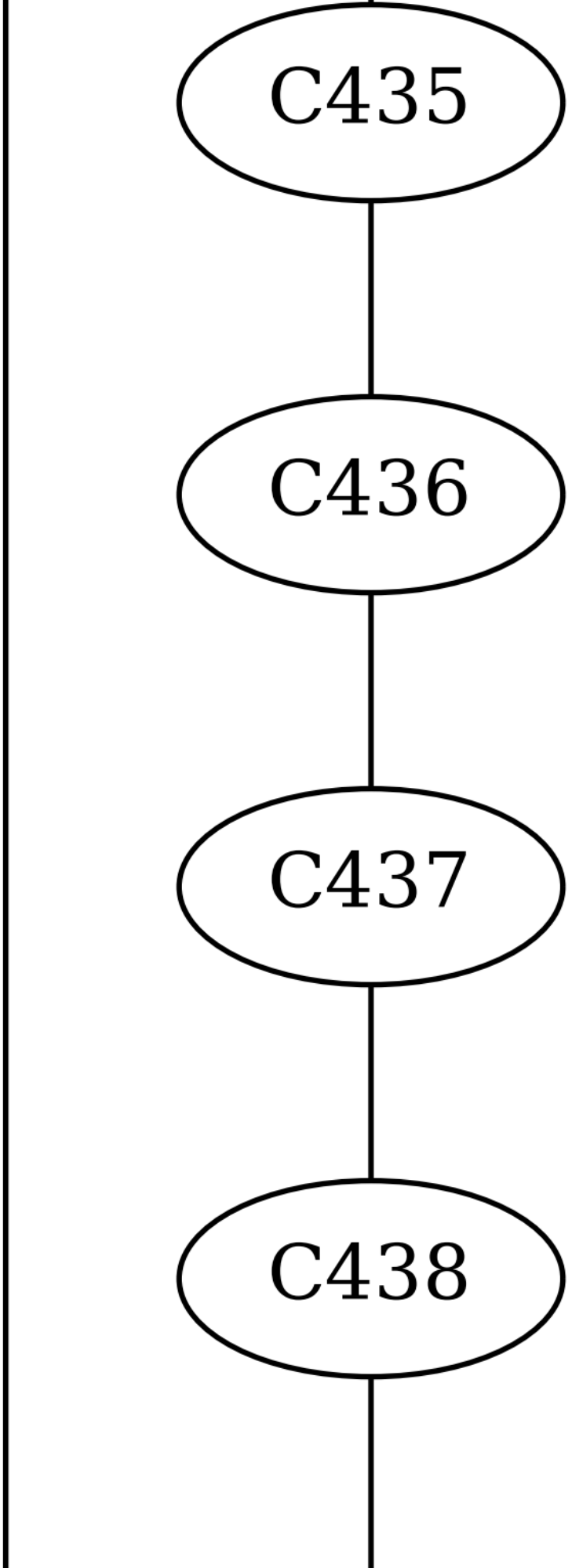
C435
C436
C437
C438

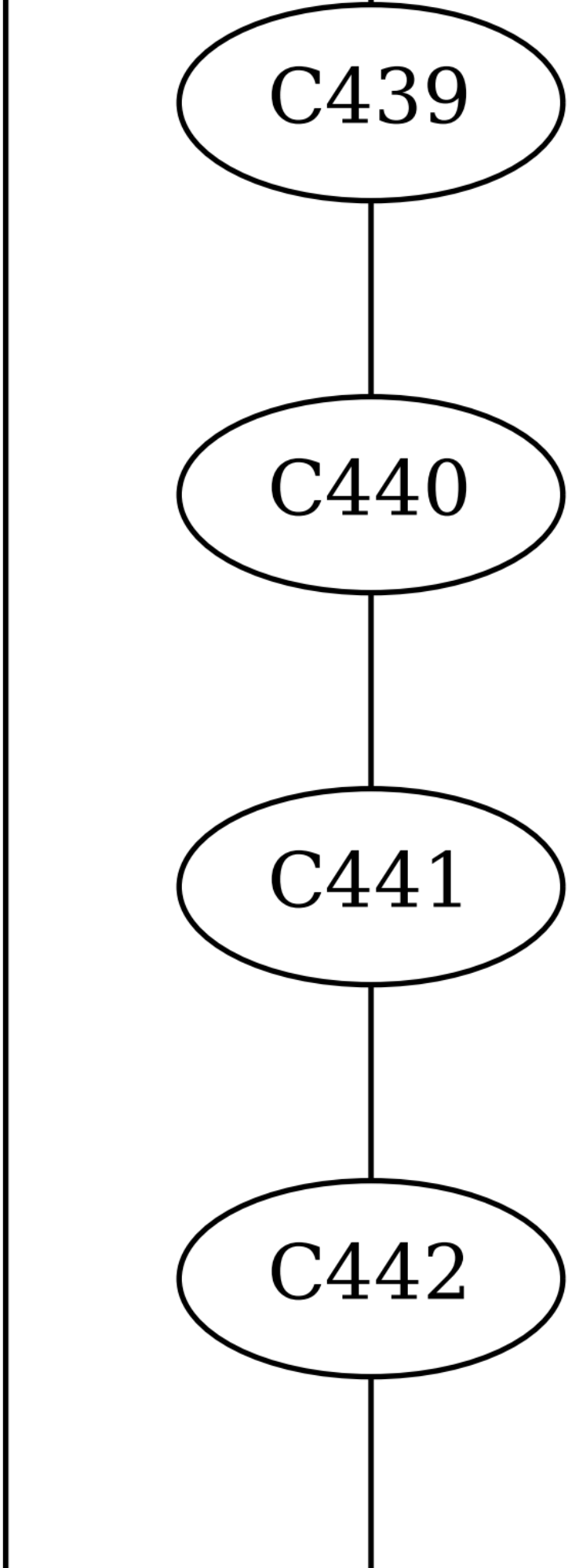
C439
C440
C441
C442

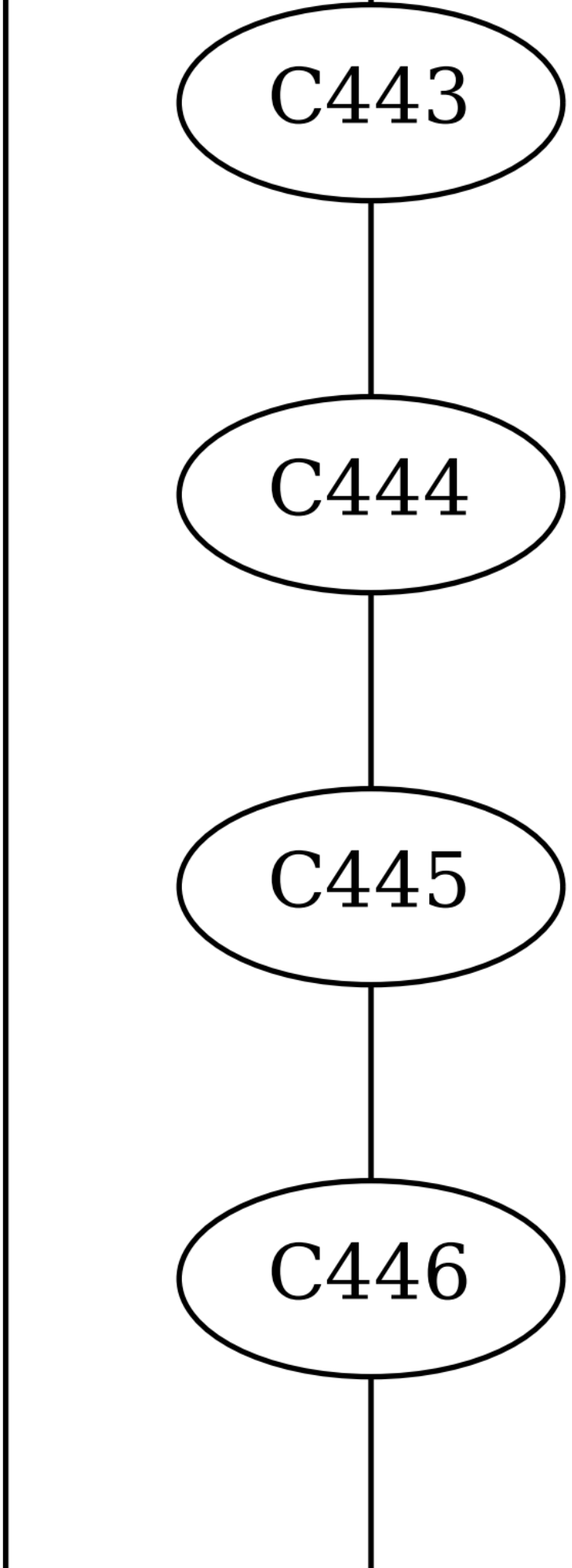
C443
C444
C445
C446

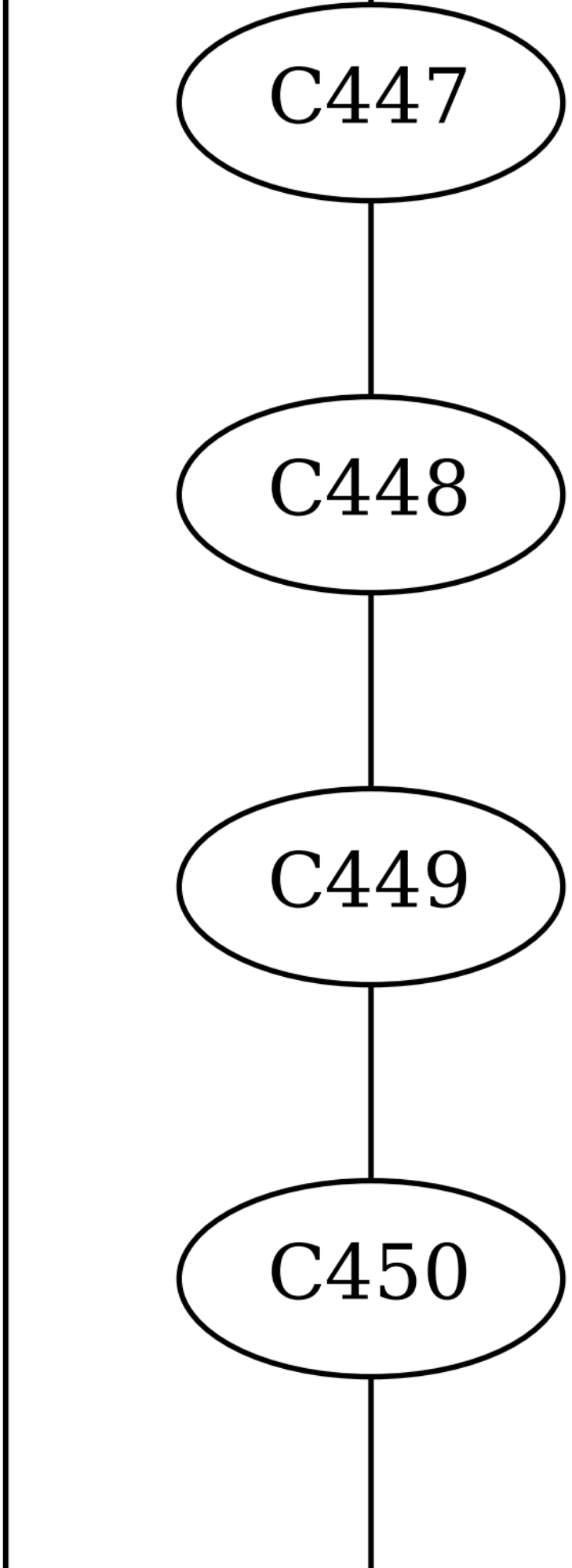
C447
C448
C449
C450

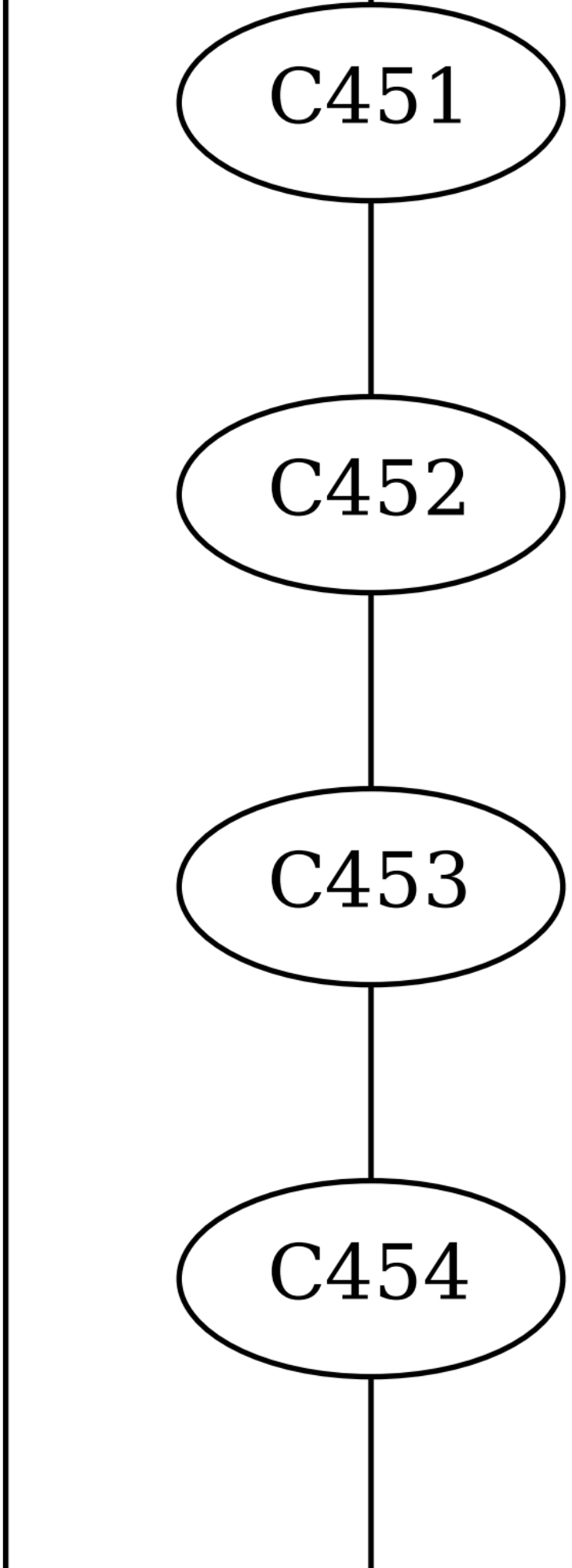
C451
C452
C453
C454

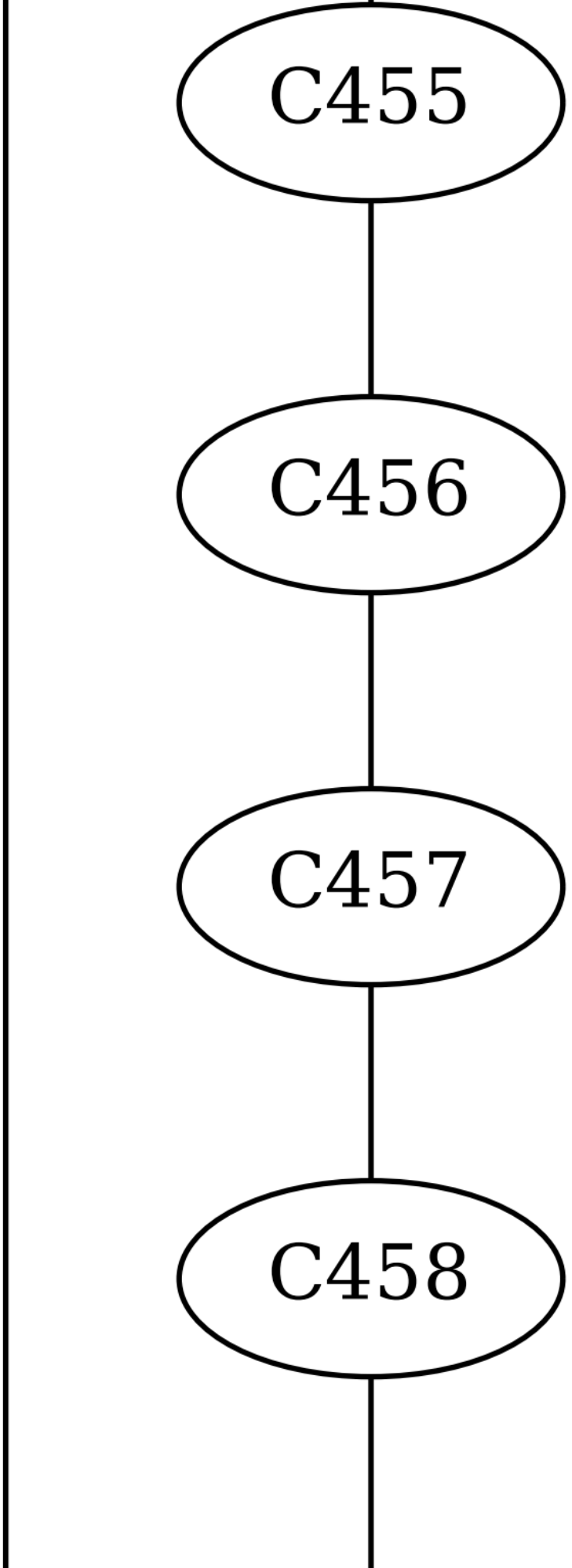
C455
C456
C457
C458

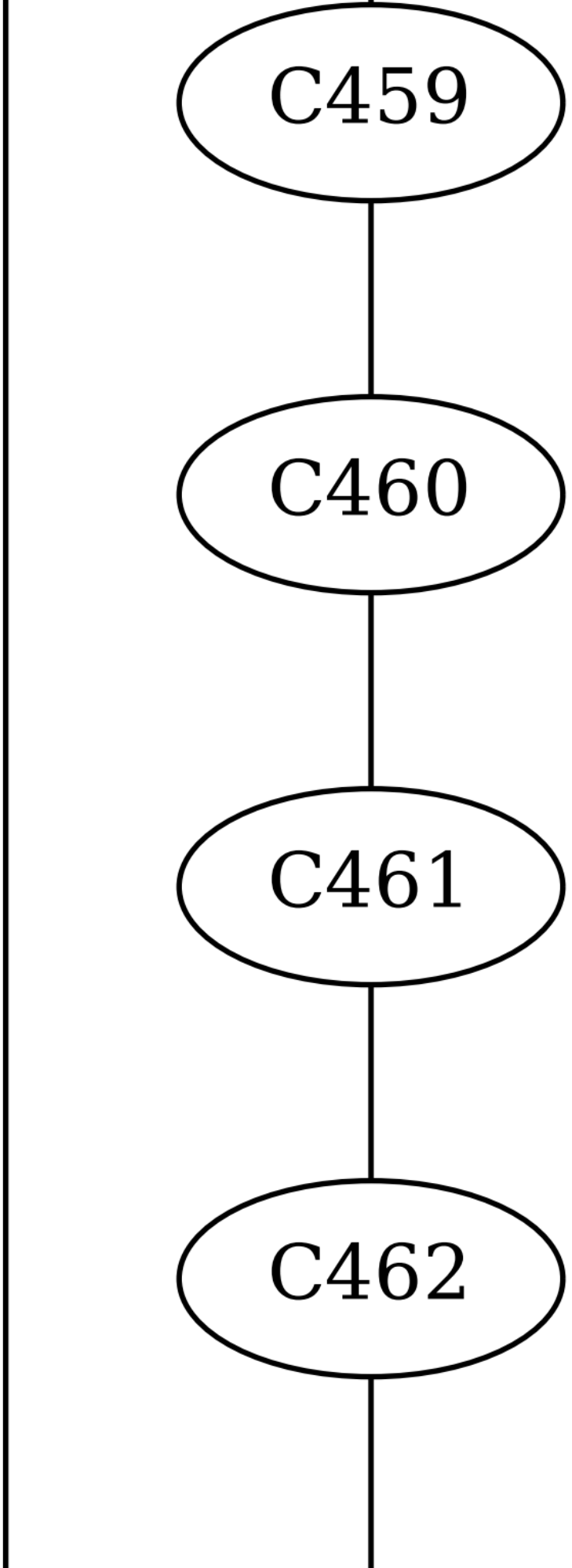
C459
C460
C461
C462

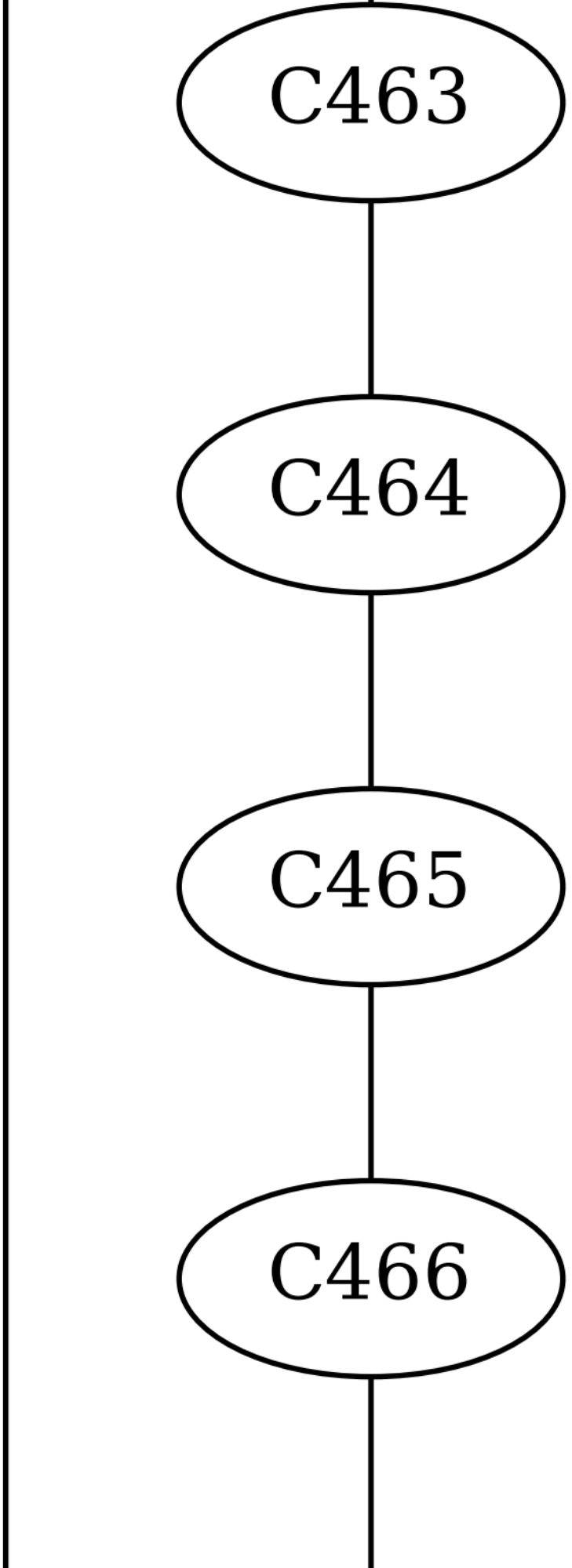
C463
C464
C465
C466

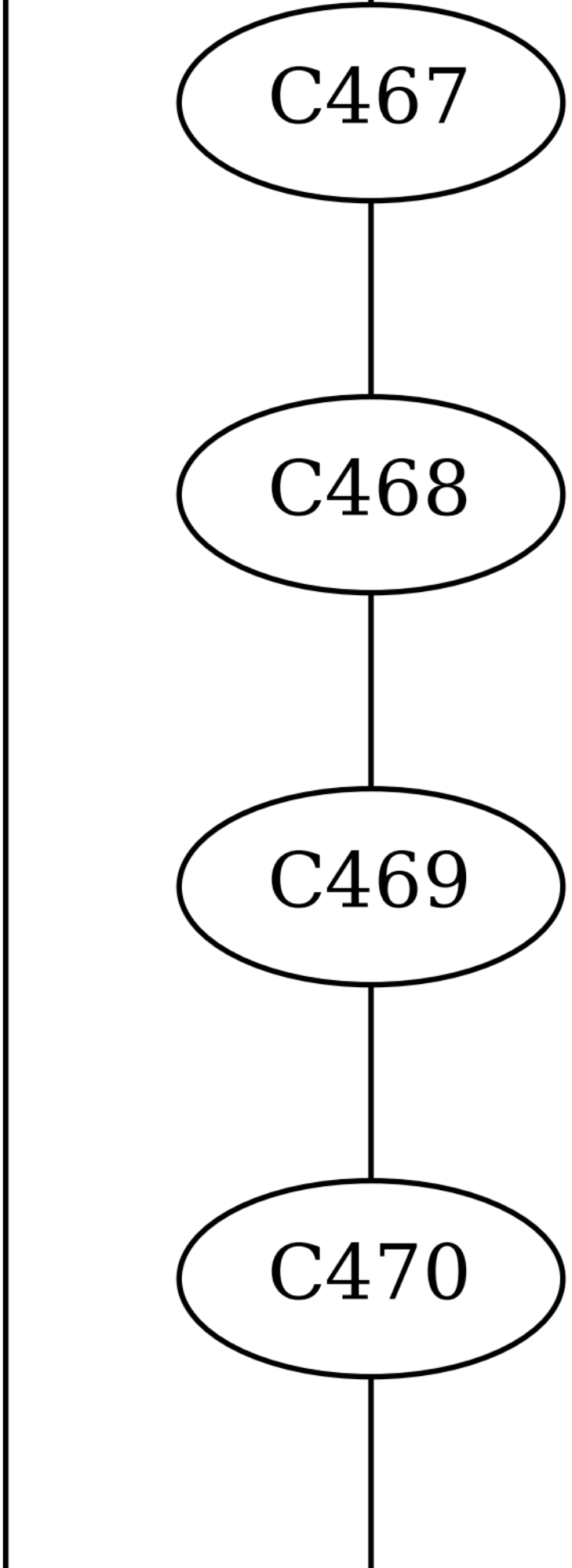
C467
C468
C469
C470

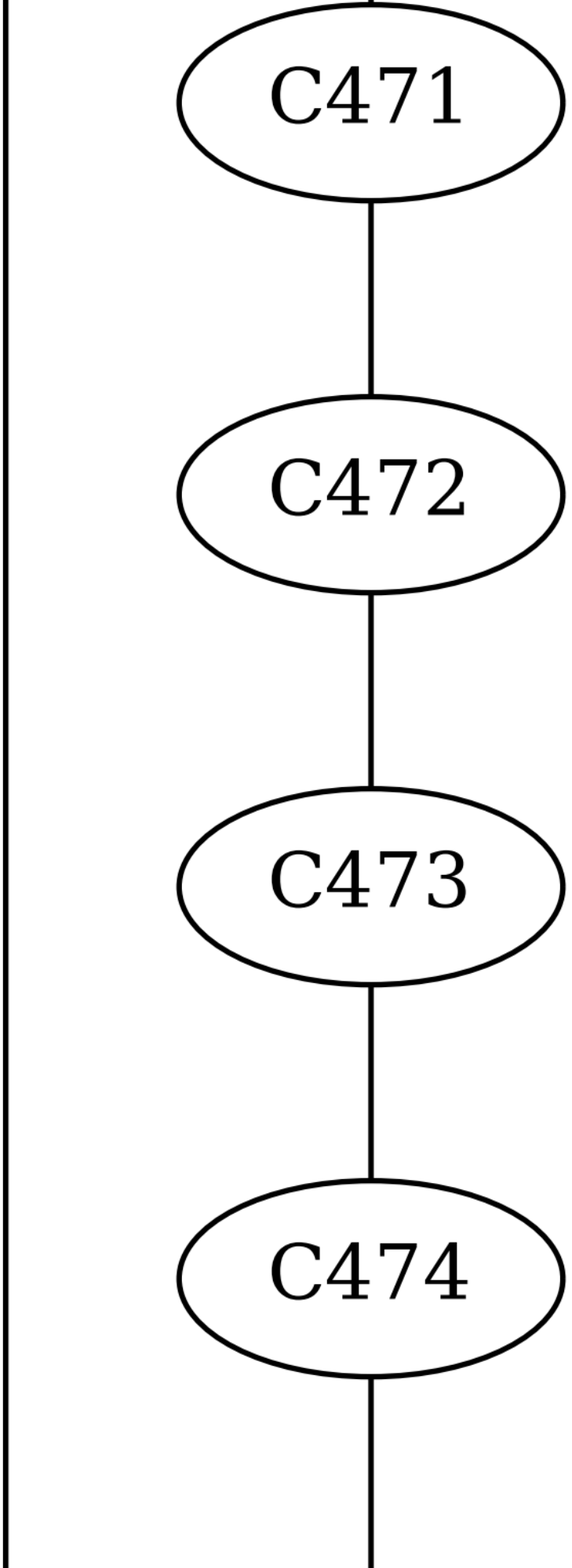
C471
C472
C473
C474

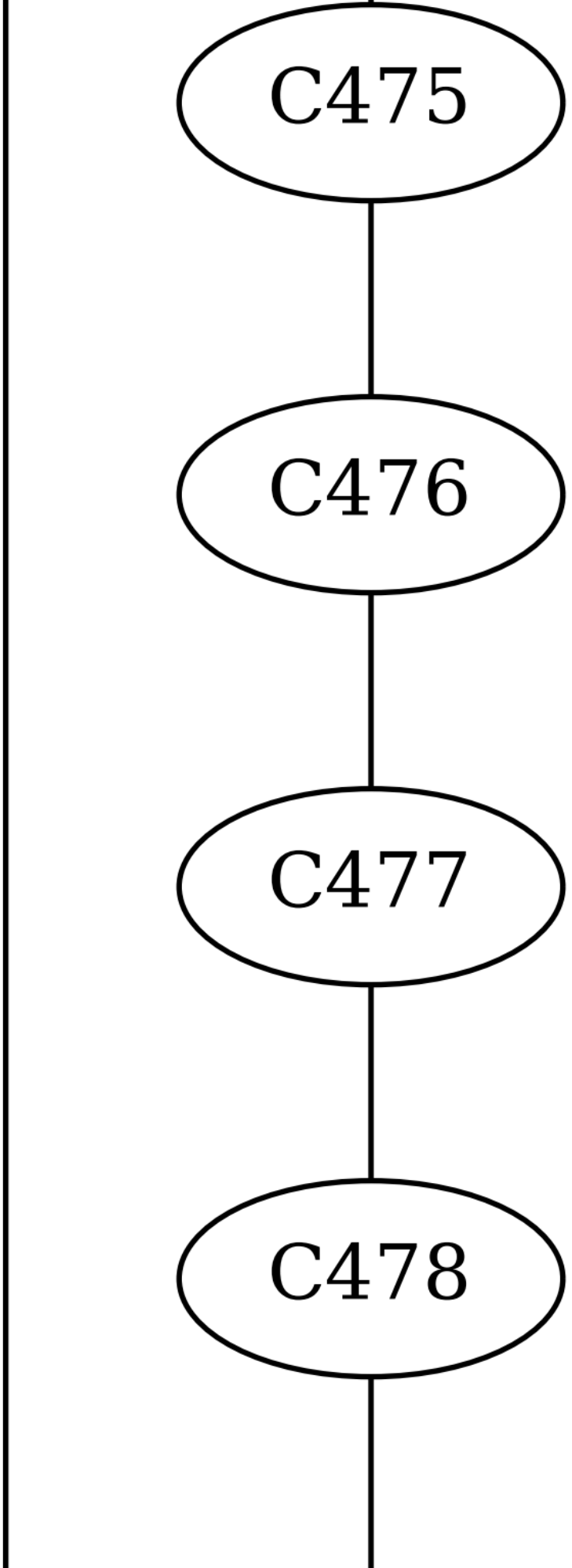
C475
C476
C477
C478

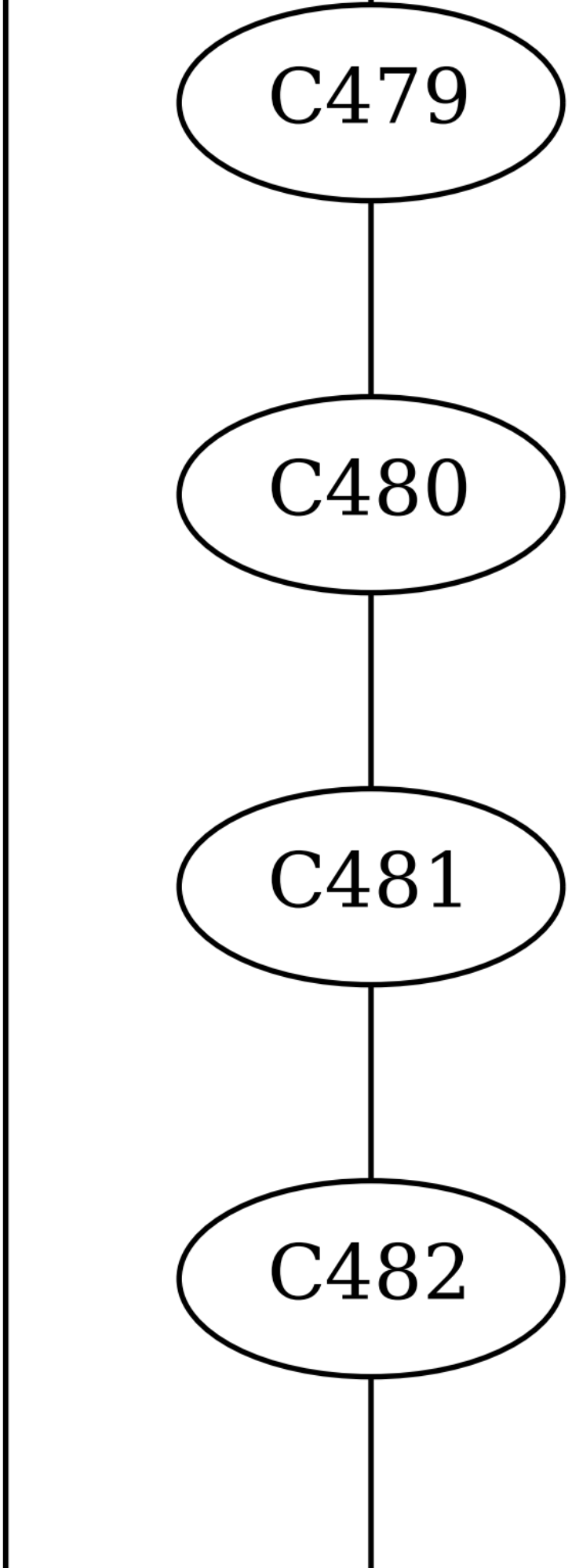
C479
C480
C481
C482

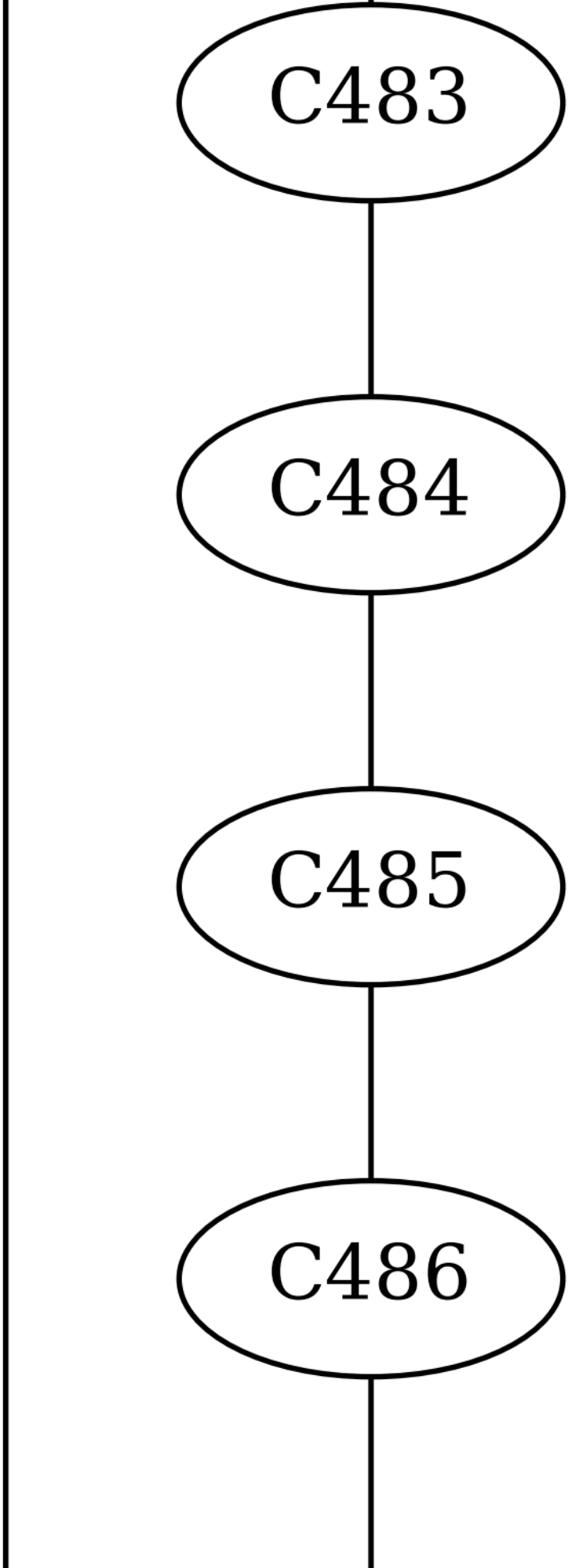
C483
C484
C485
C486

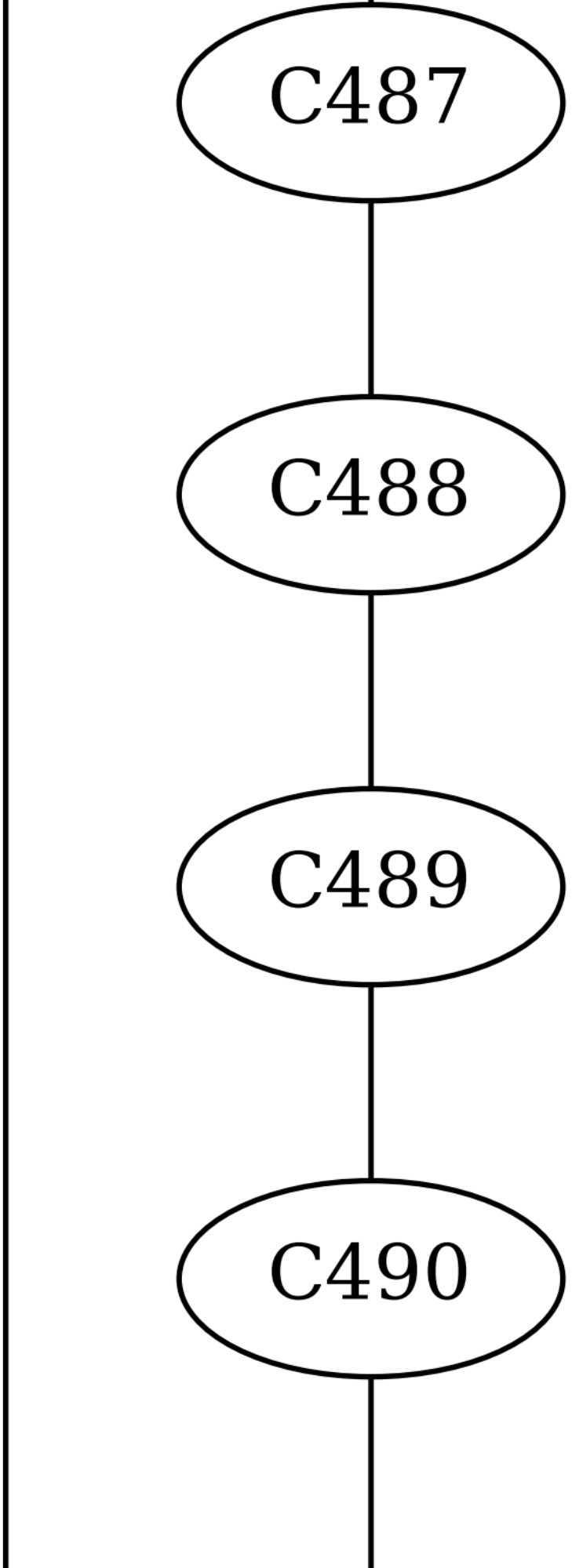
C487
C488
C489
C490

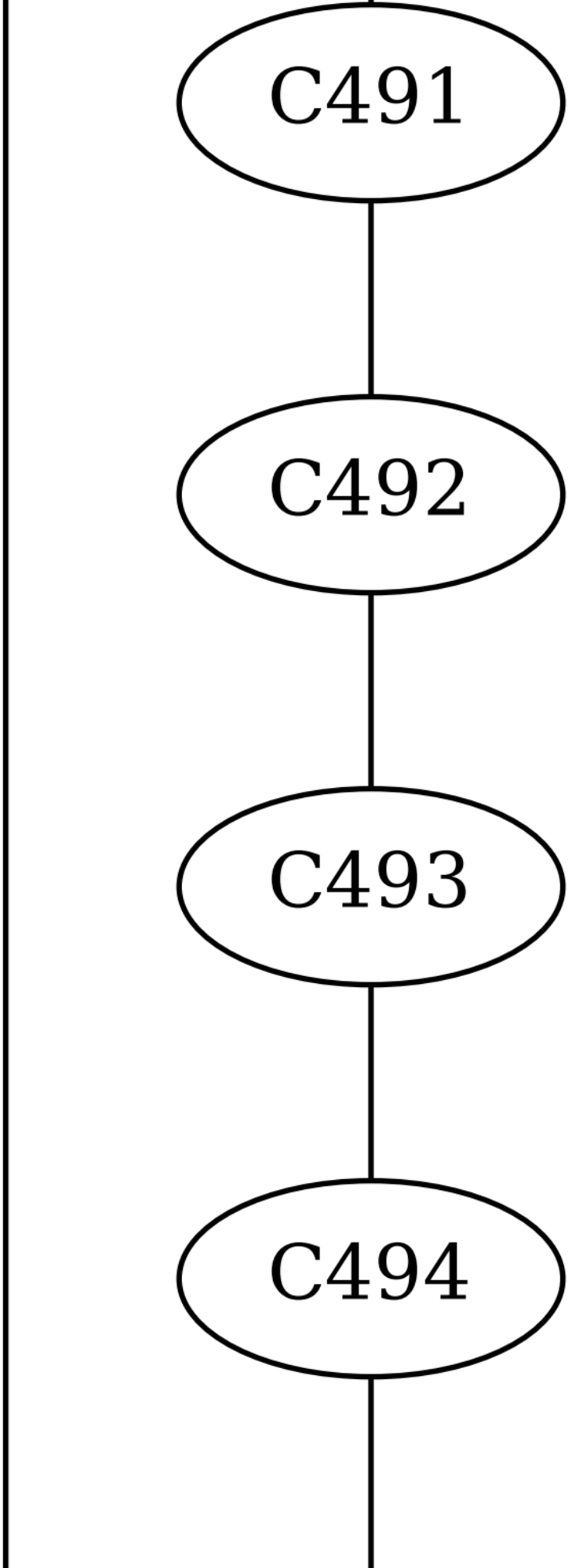
C491
C492
C493
C494

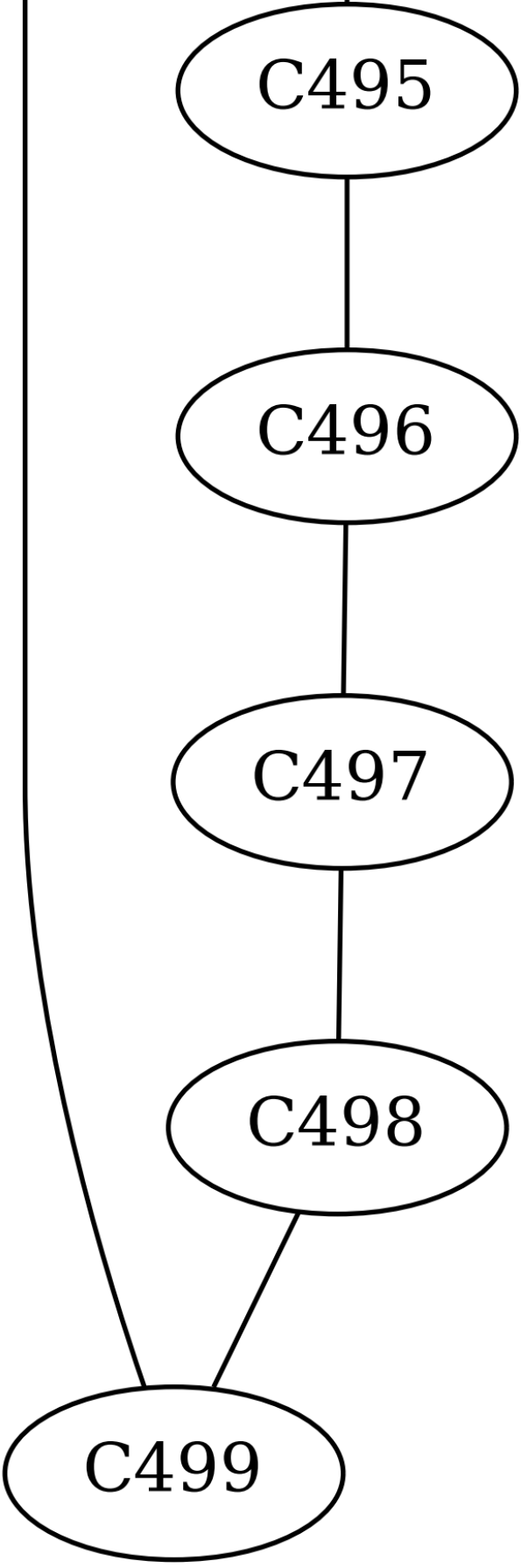
C495
C496
C497
C498
C499