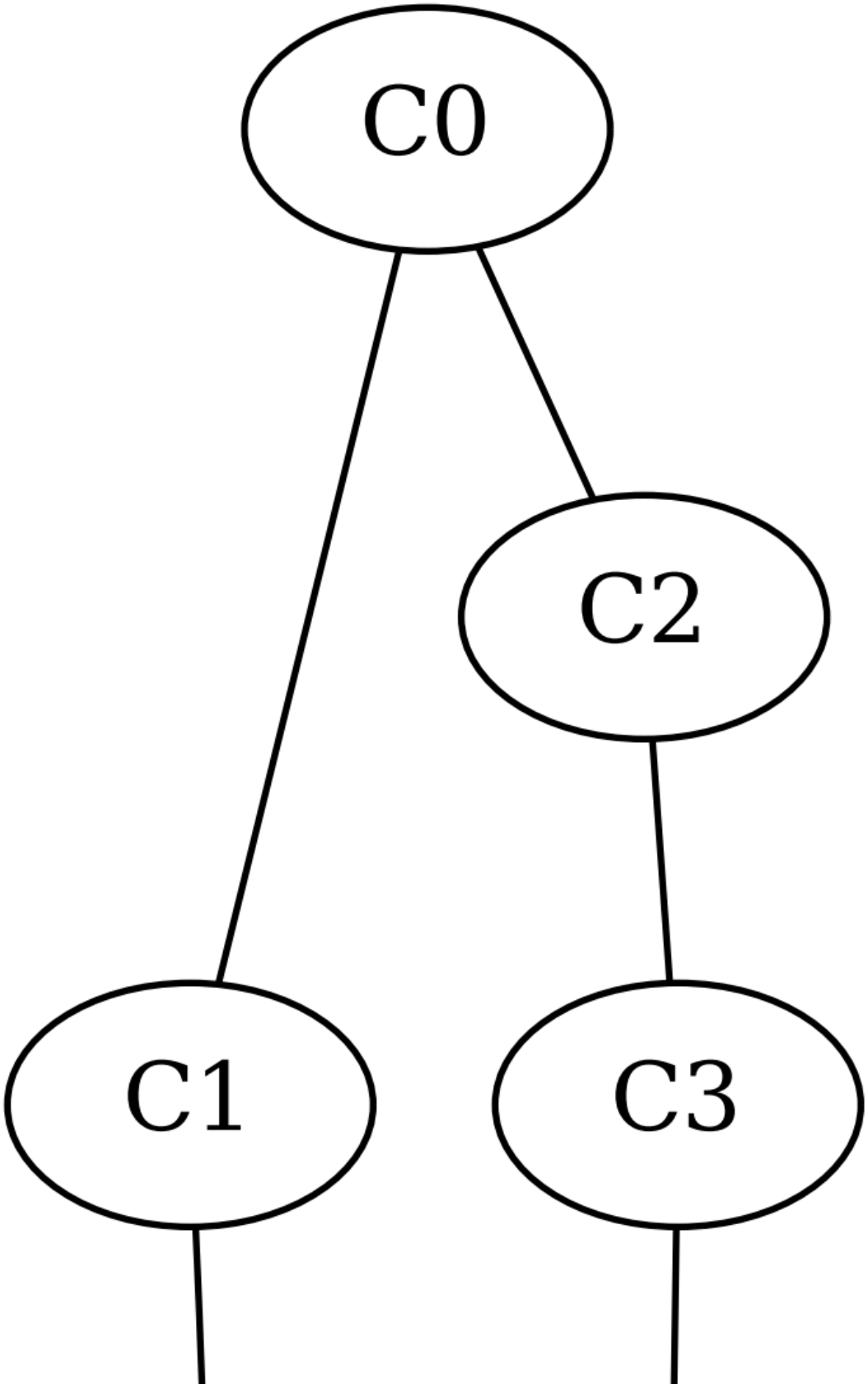
C0
C2
C1
C3

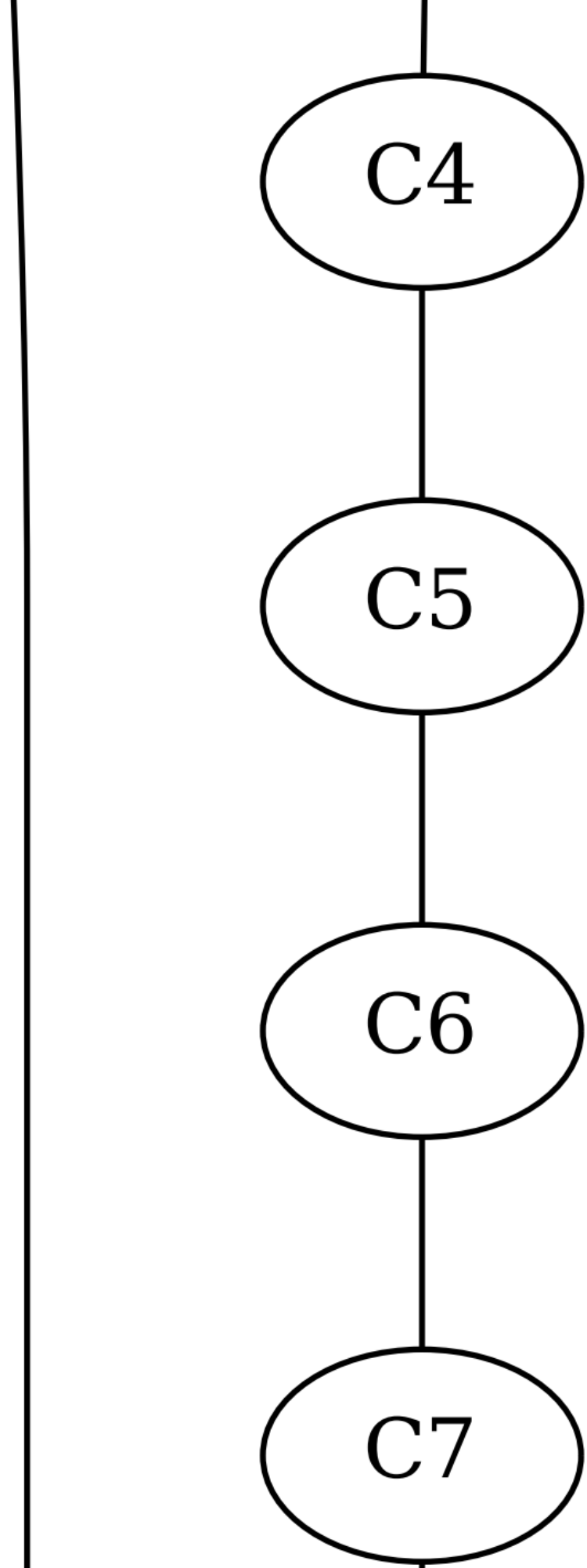
C4
C5
C6
C7

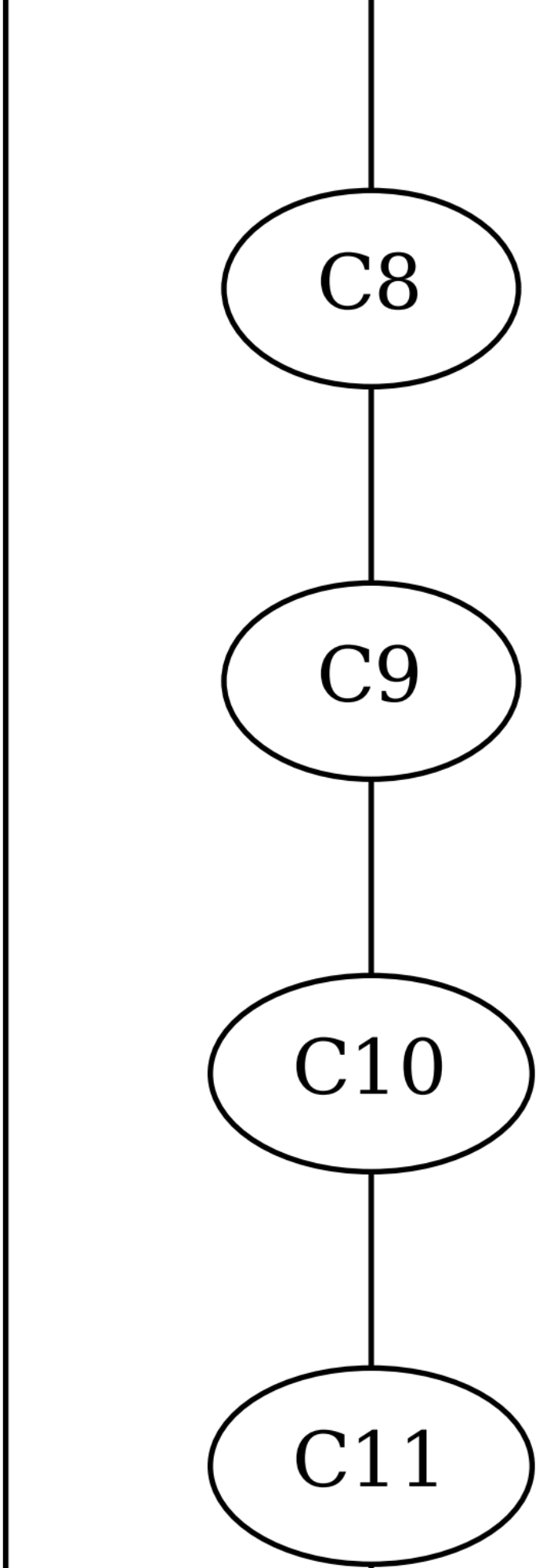
C8
C9
C10
C11

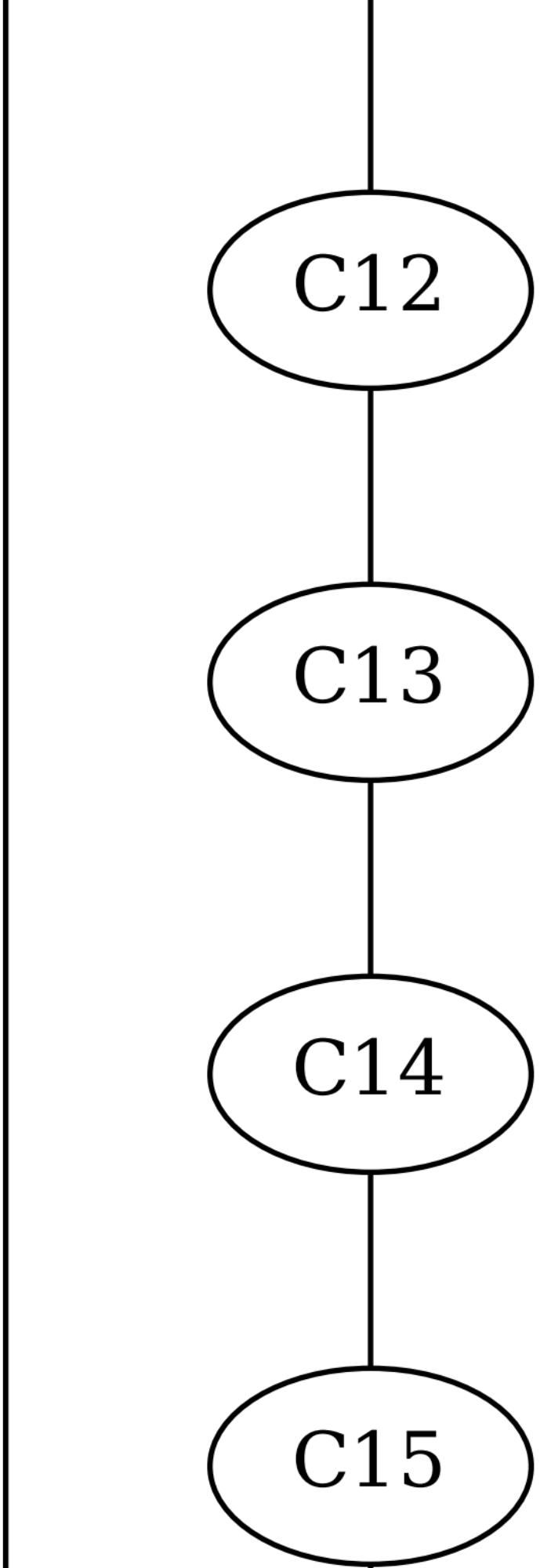
C12
C13
C14
C15

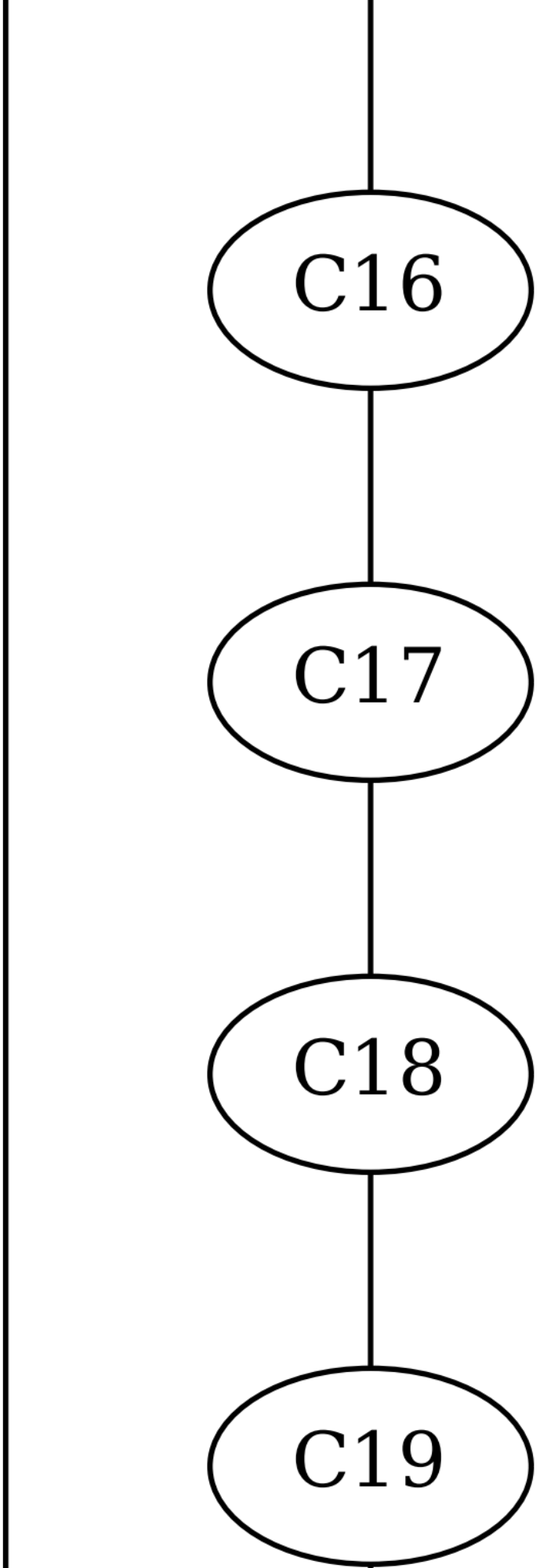
C16
C17
C18
C19

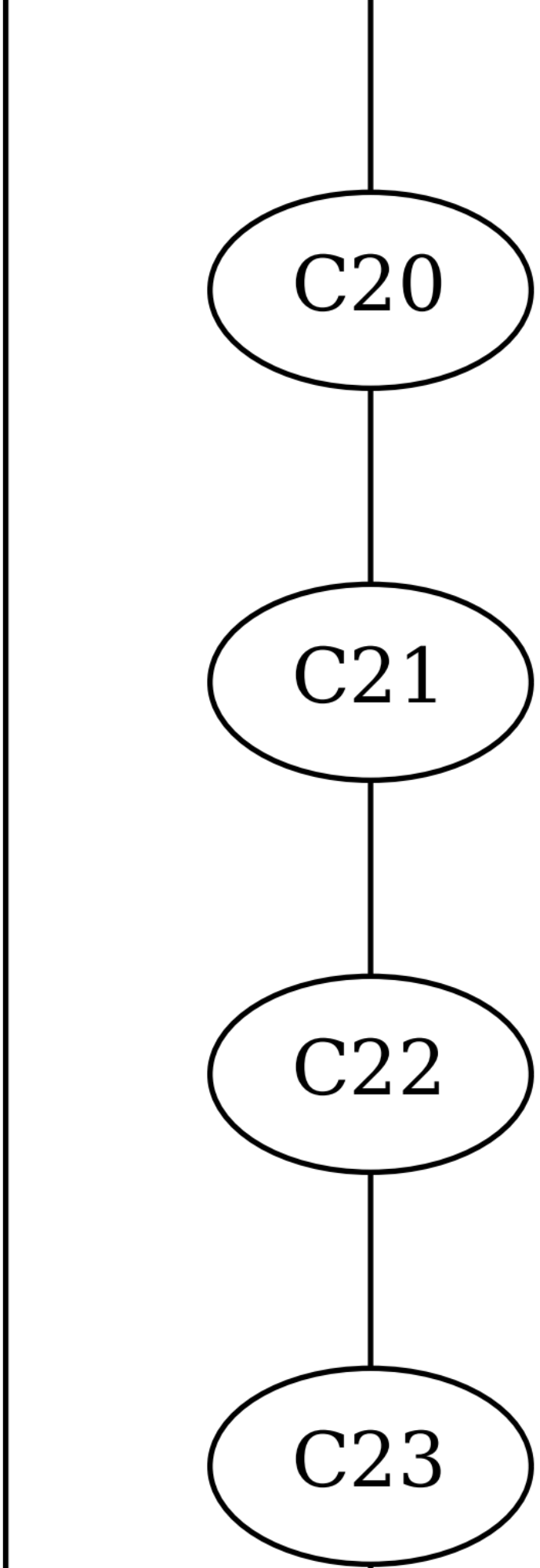
C20
C21
C22
C23

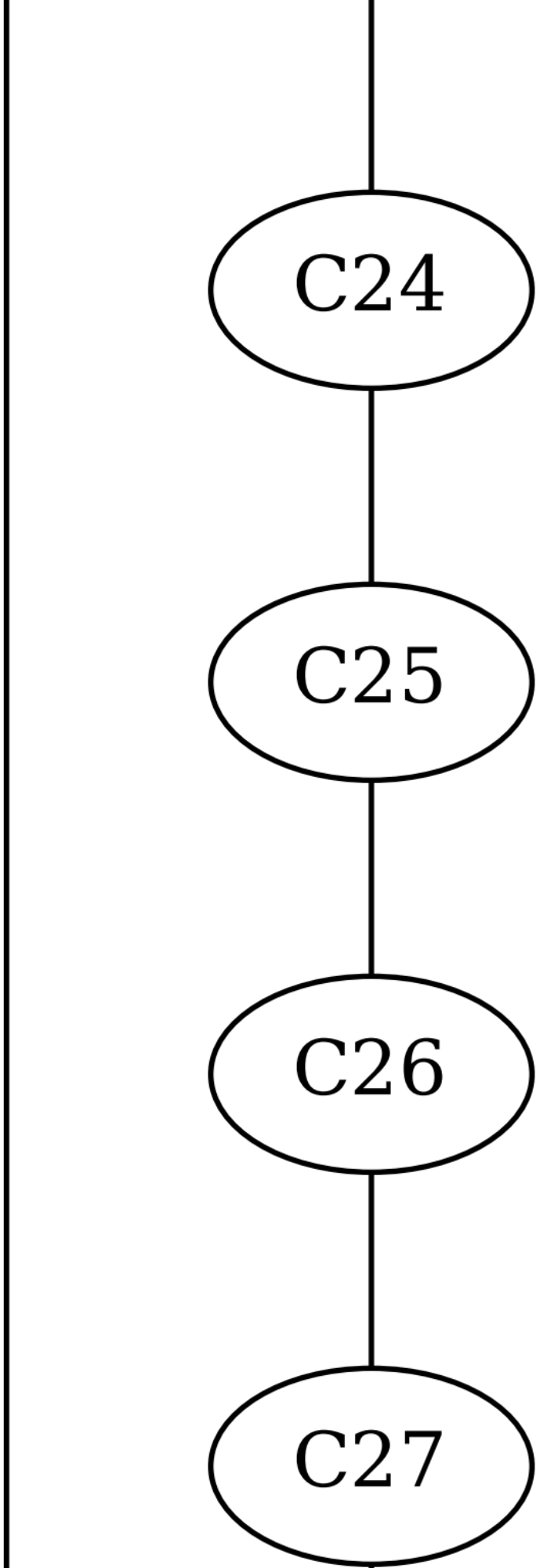
C24
C25
C26
C27

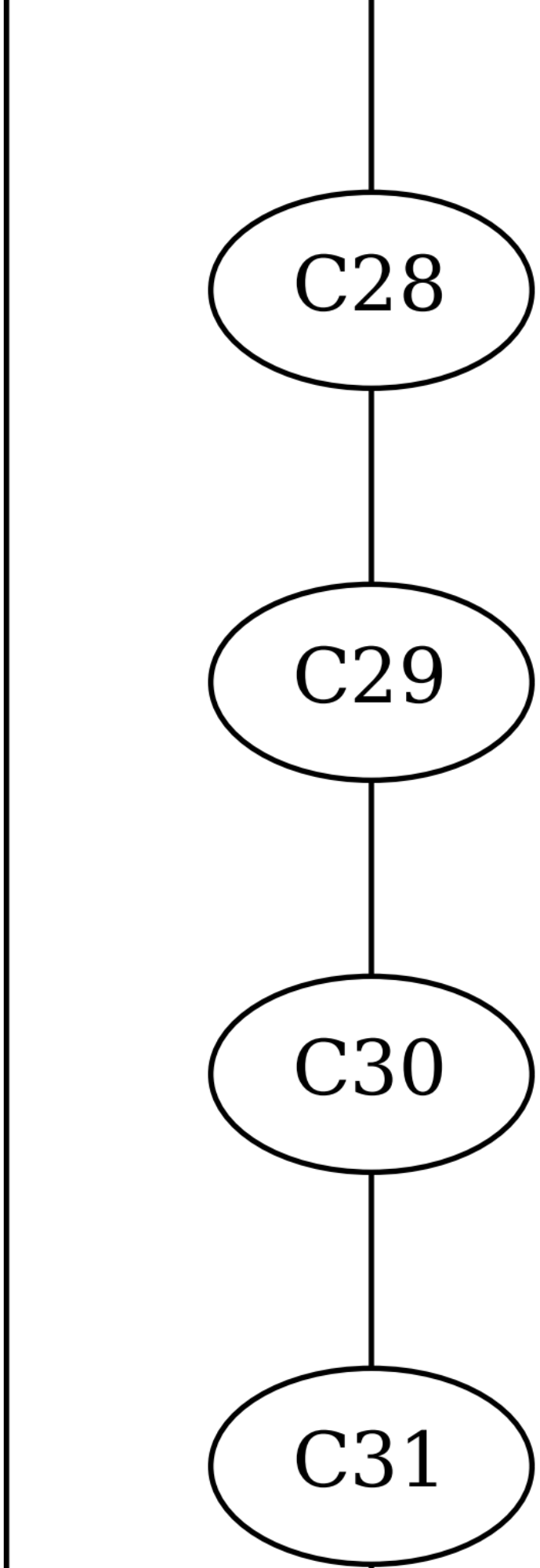
C28
C29
C30
C31

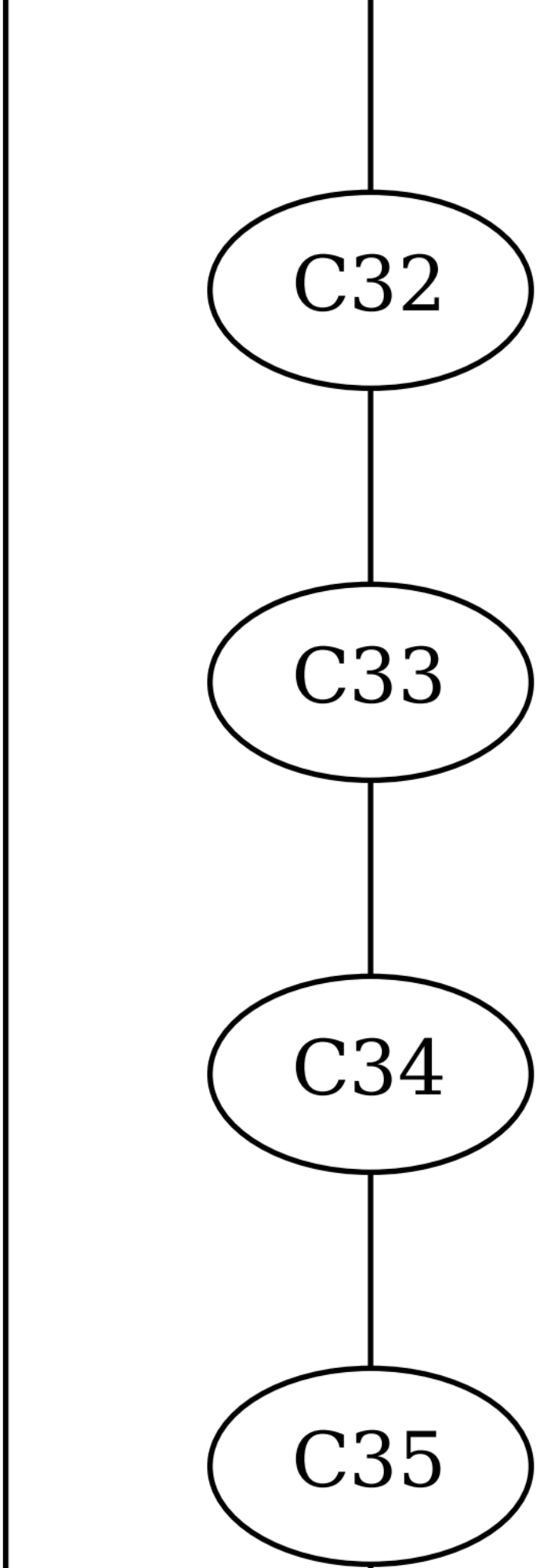
C32
C33
C34
C35

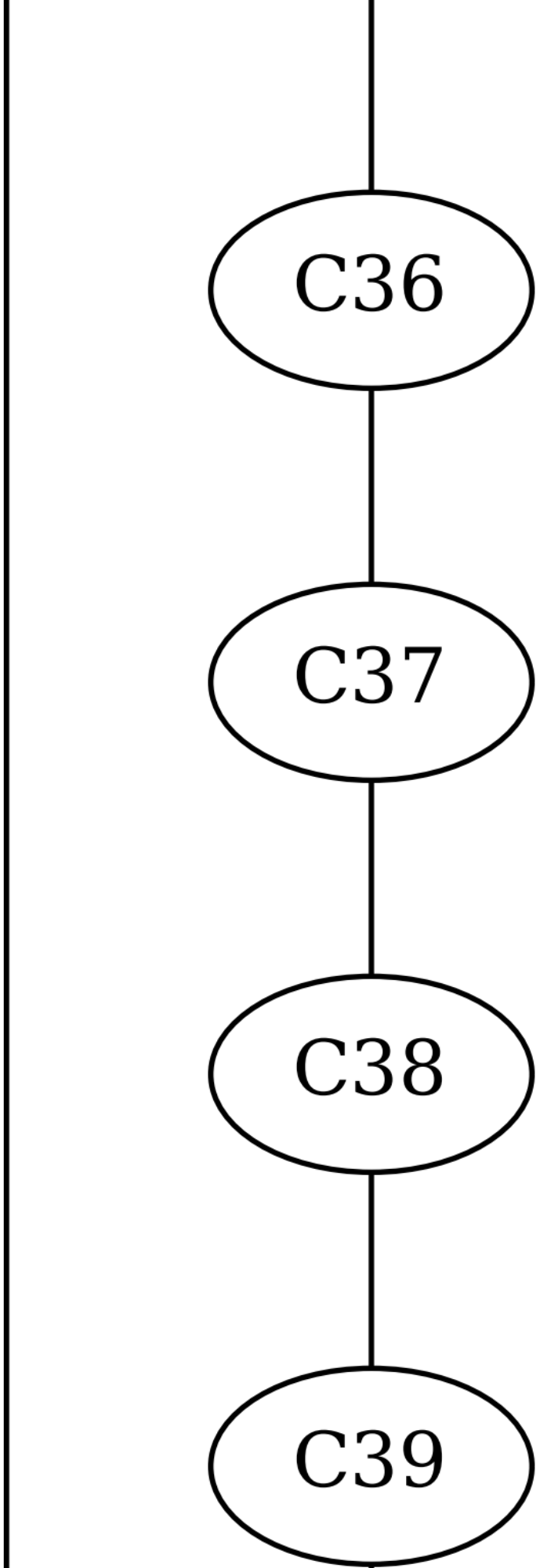
C36
C37
C38
C39

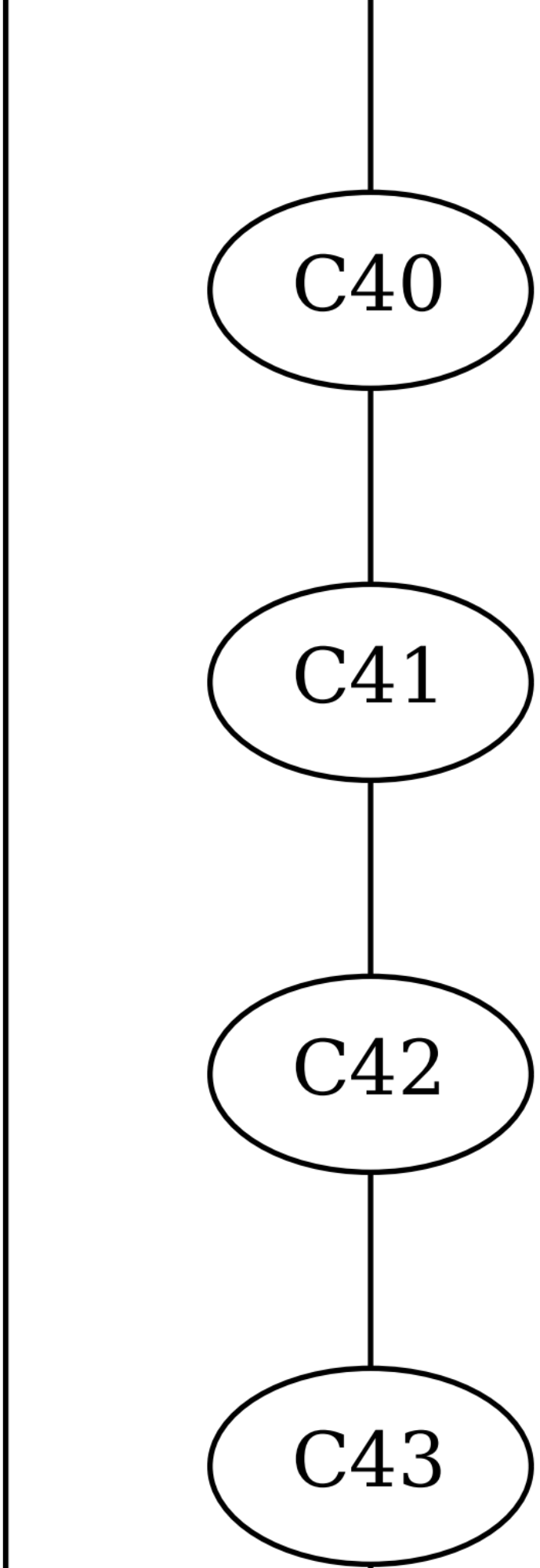
C40
C41
C42
C43

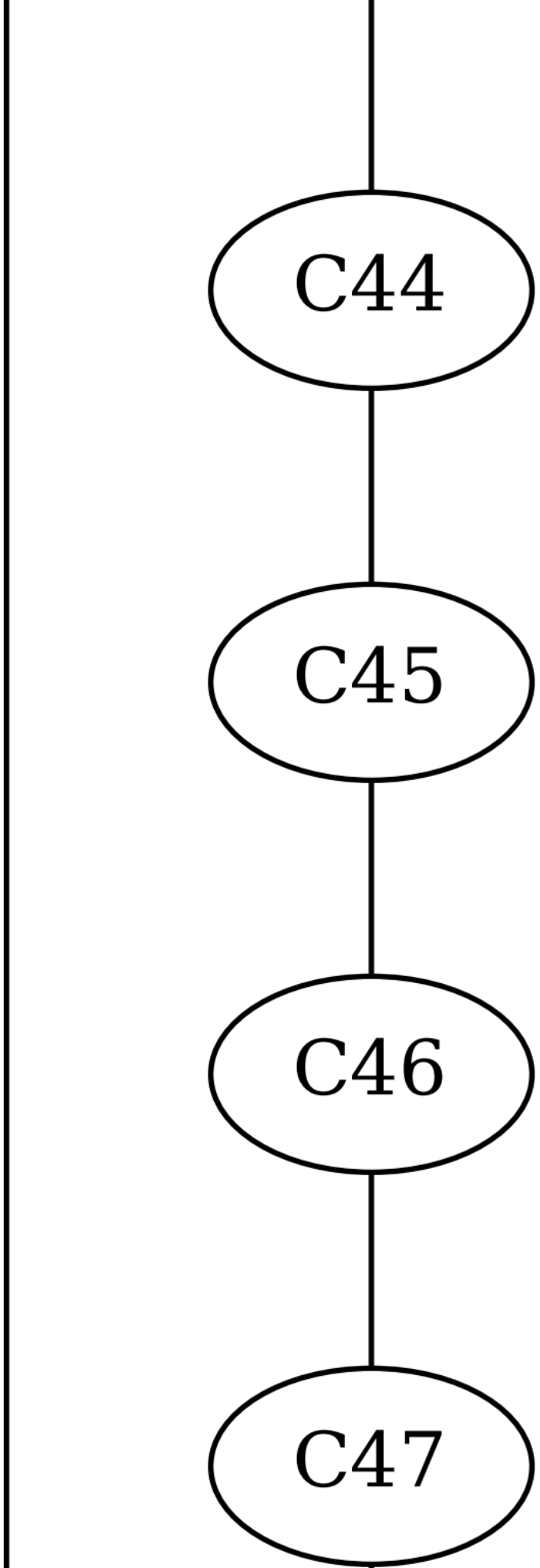
C44
C45
C46
C47

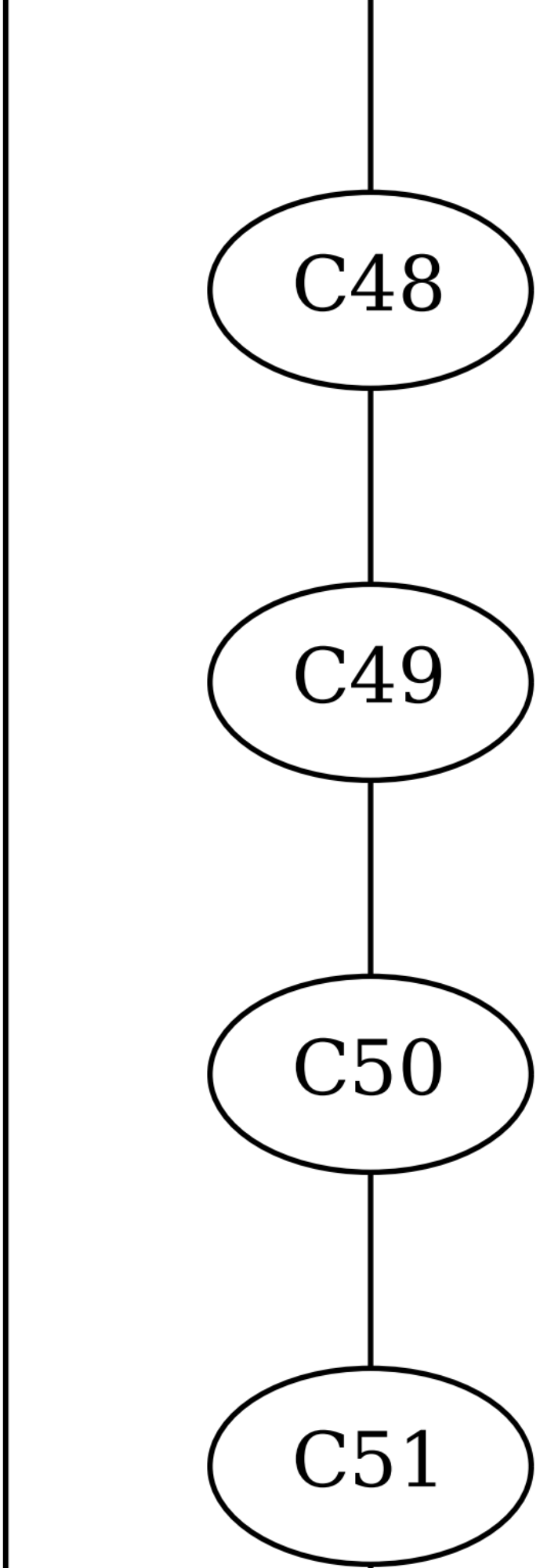
C48
C49
C50
C51

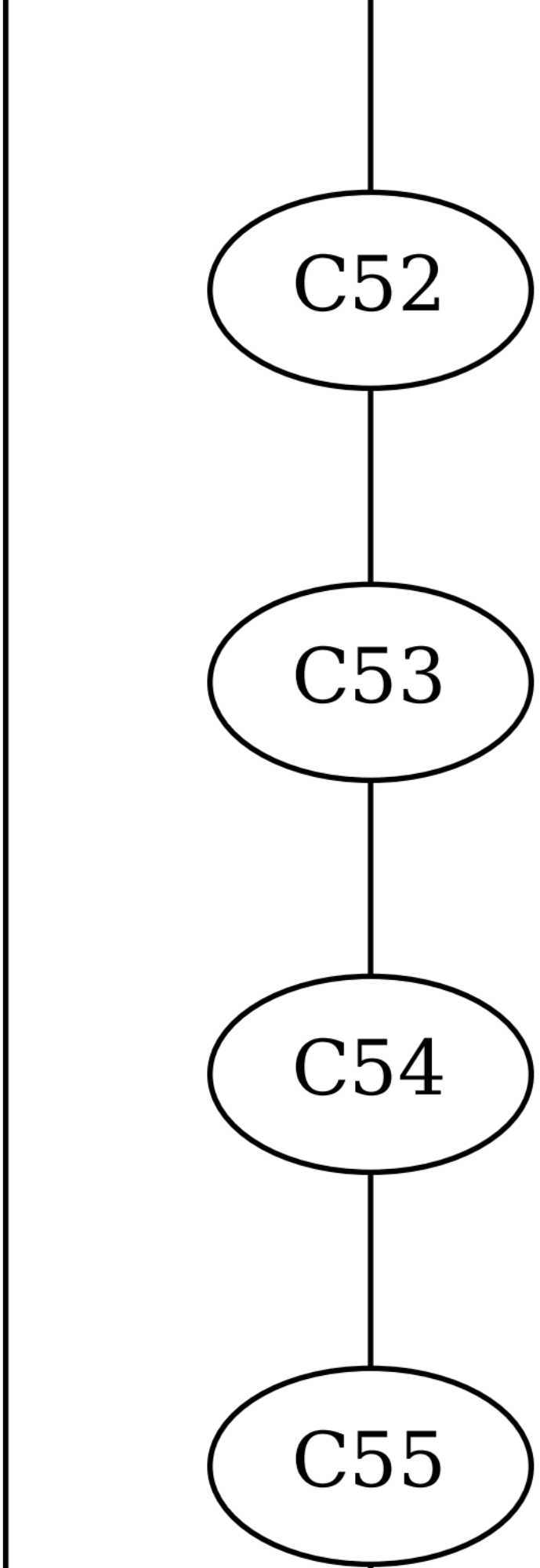
C52
C53
C54
C55

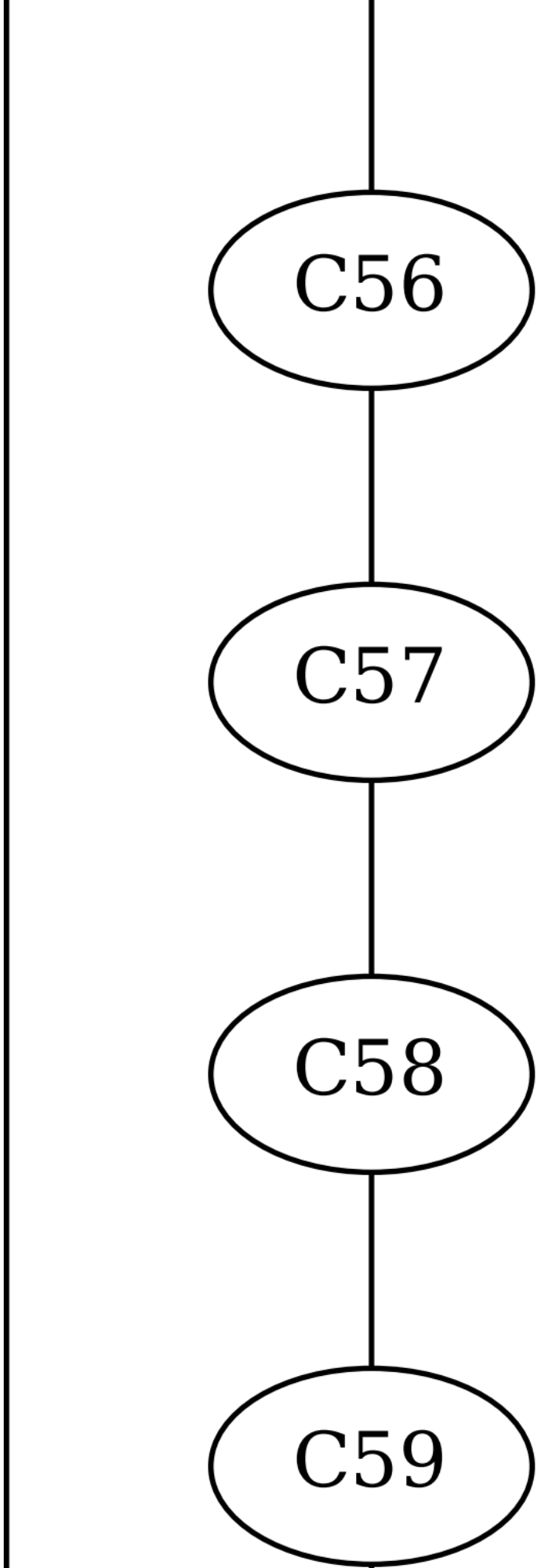
C56
C57
C58
C59

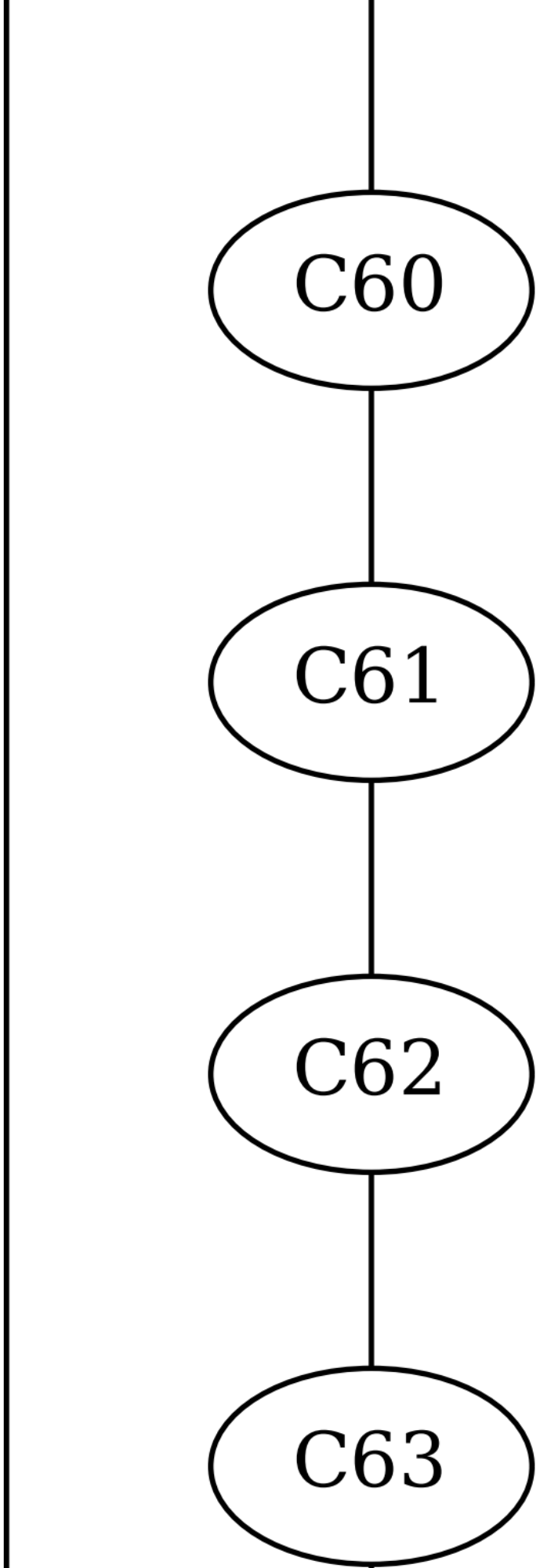
C60
C61
C62
C63

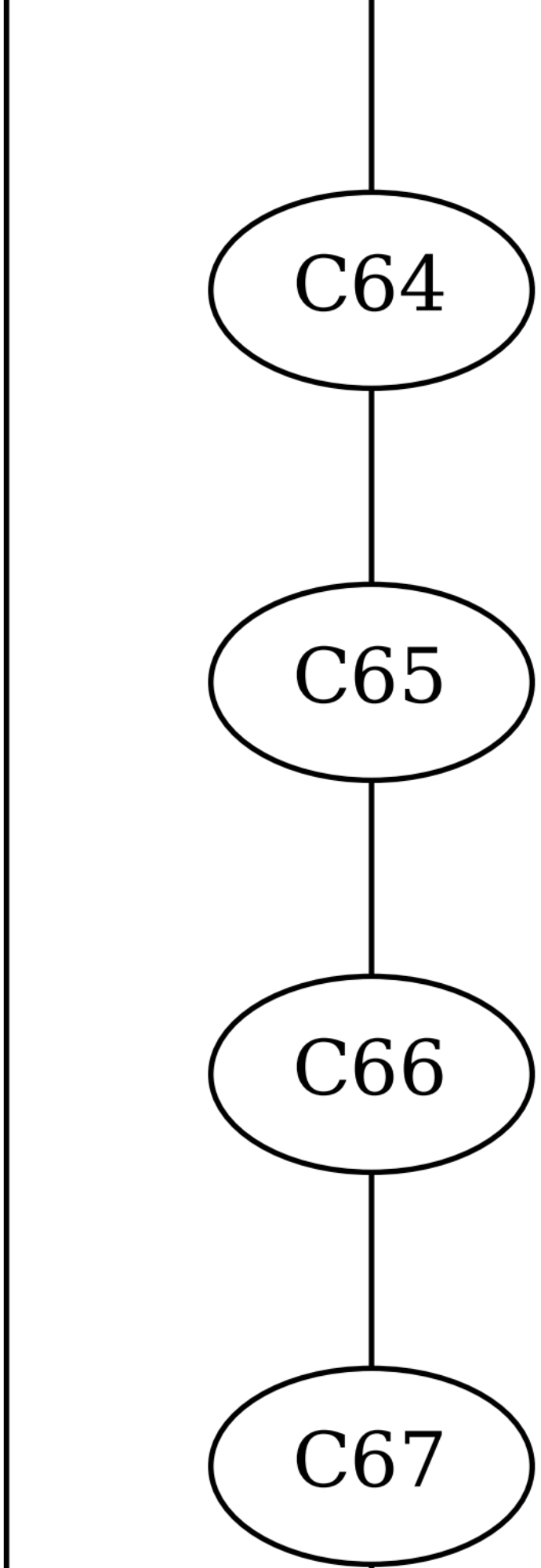
C64
C65
C66
C67

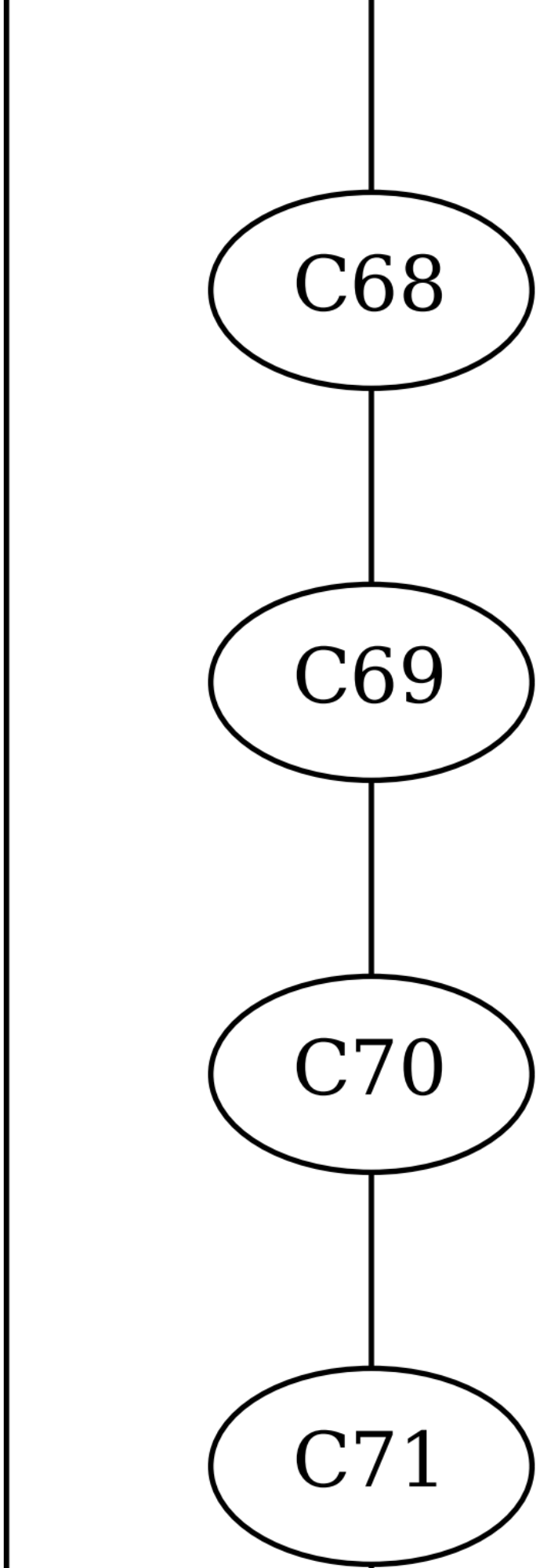
C68
C69
C70
C71

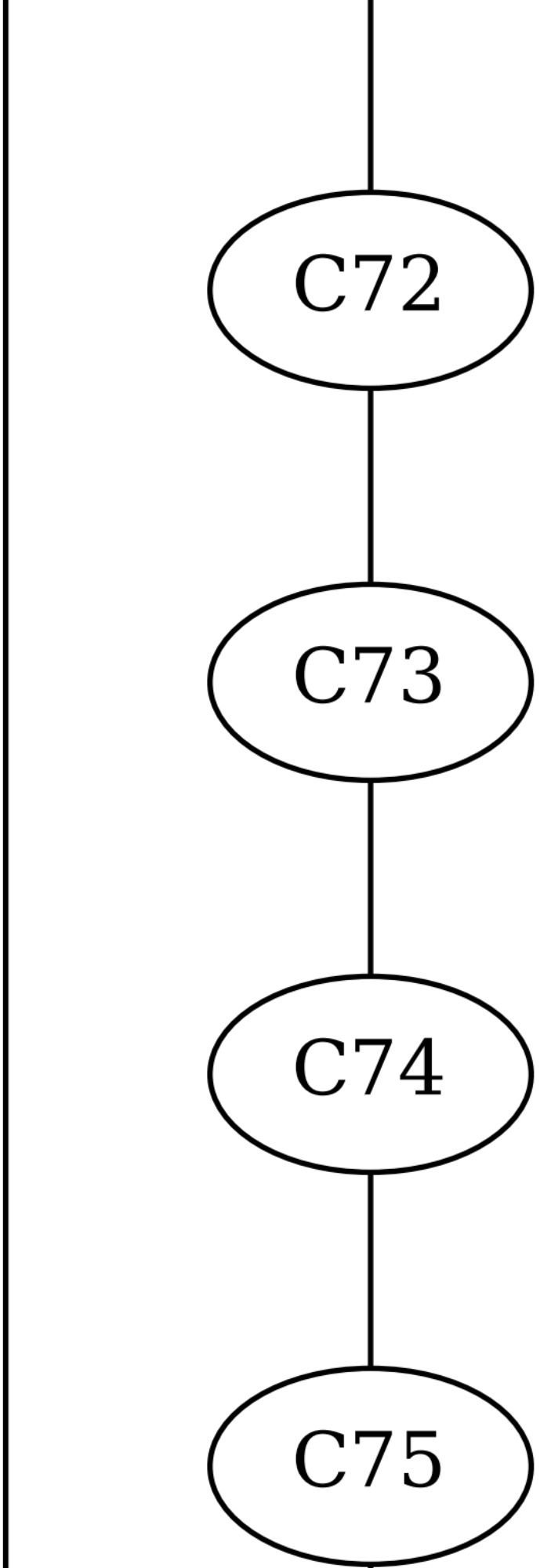
C72
C73
C74
C75

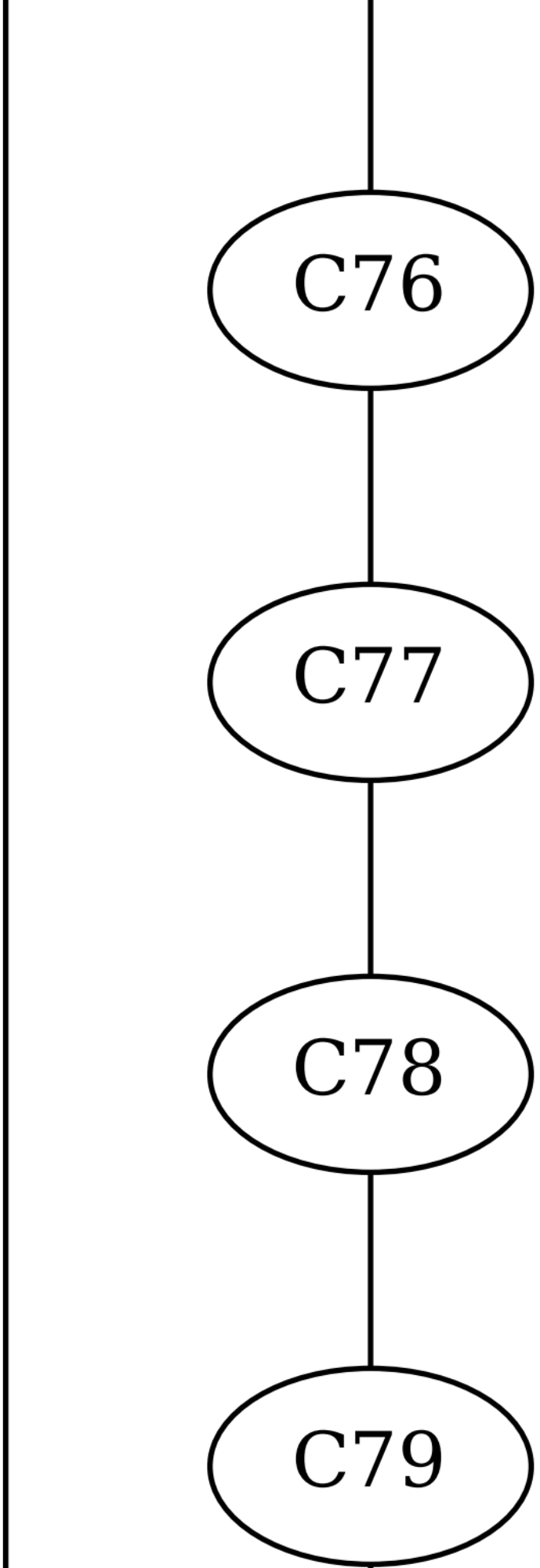
C76
C77
C78
C79

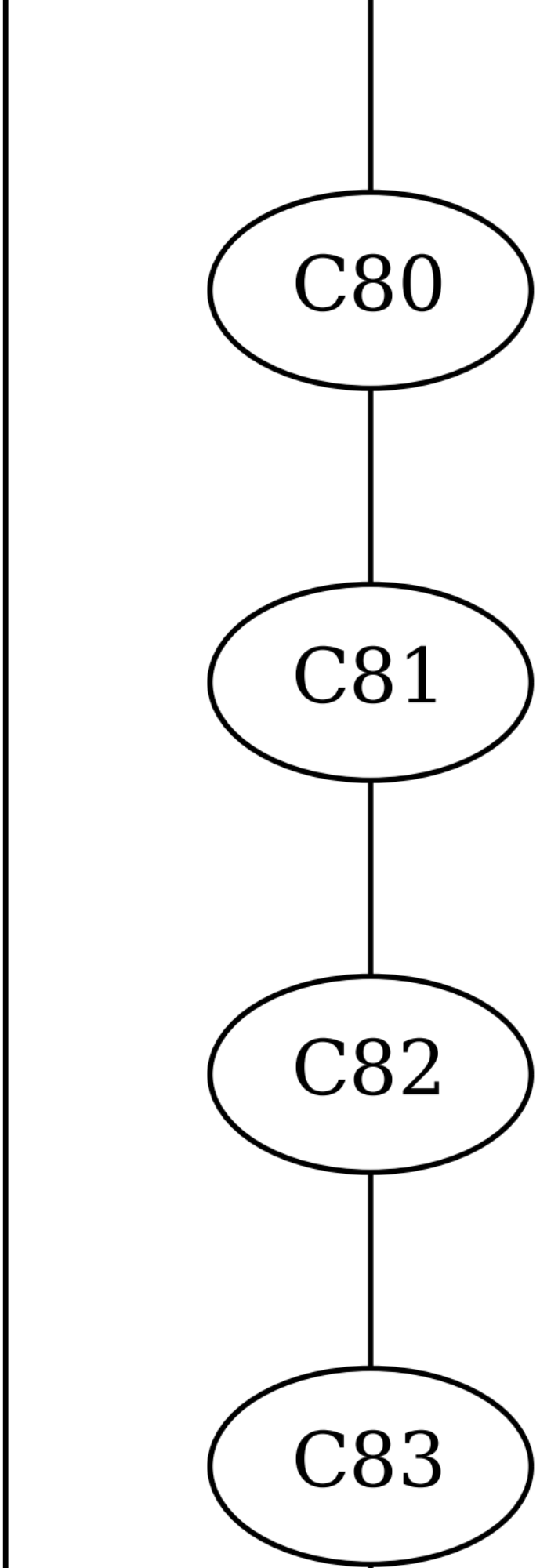
C80
C81
C82
C83

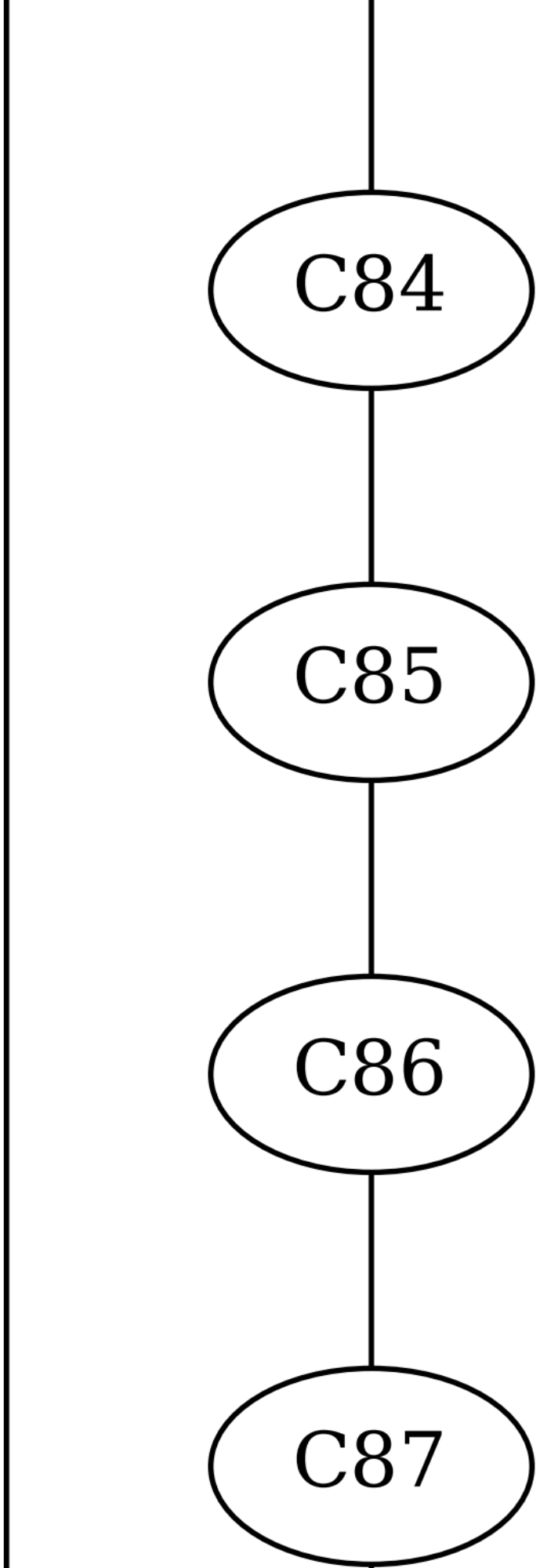
C84
C85
C86
C87

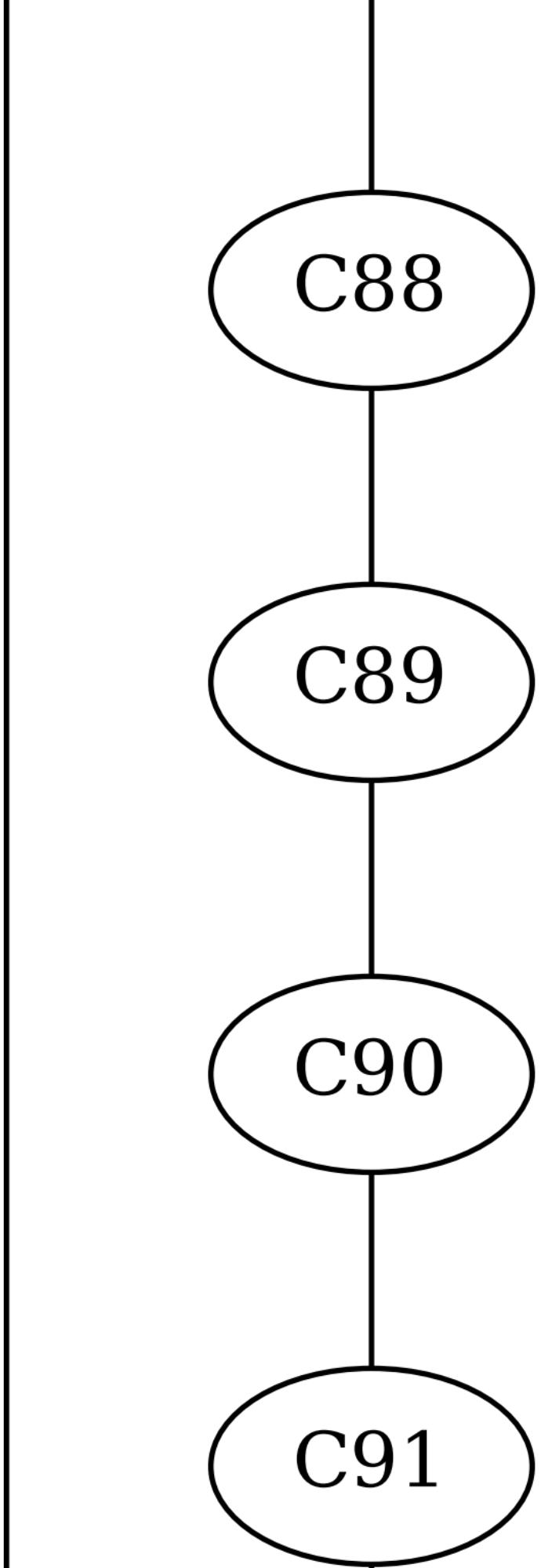
C88
C89
C90
C91

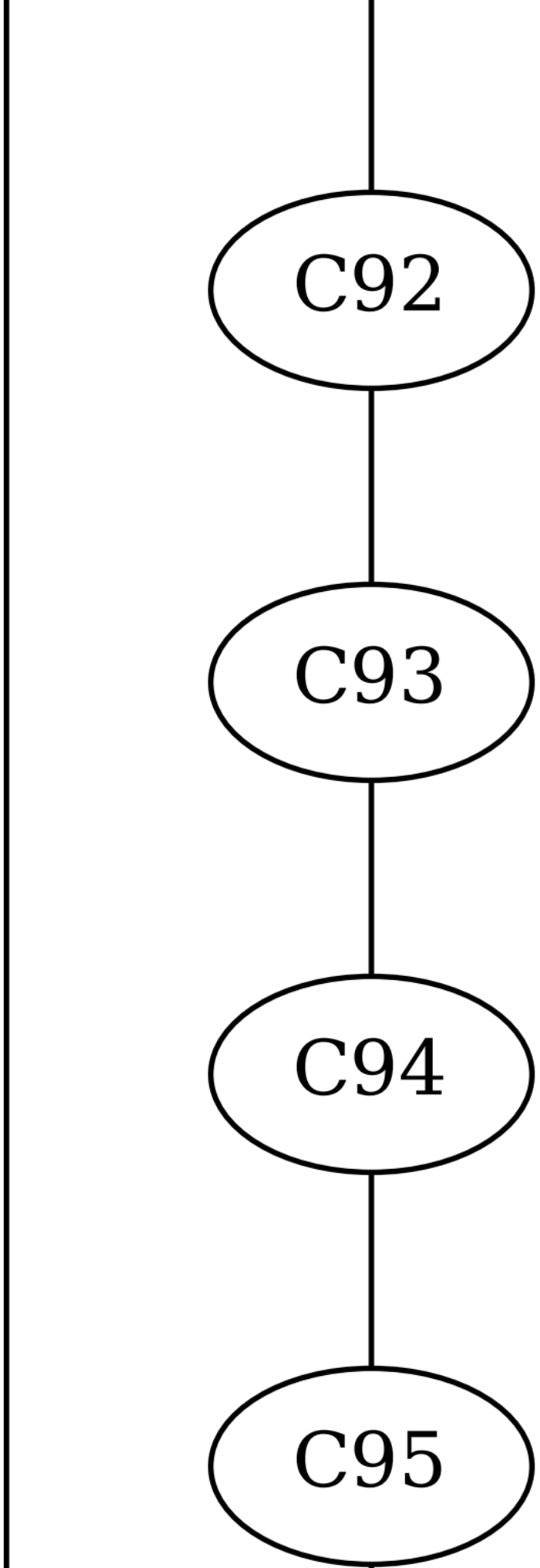
C92
C93
C94
C95

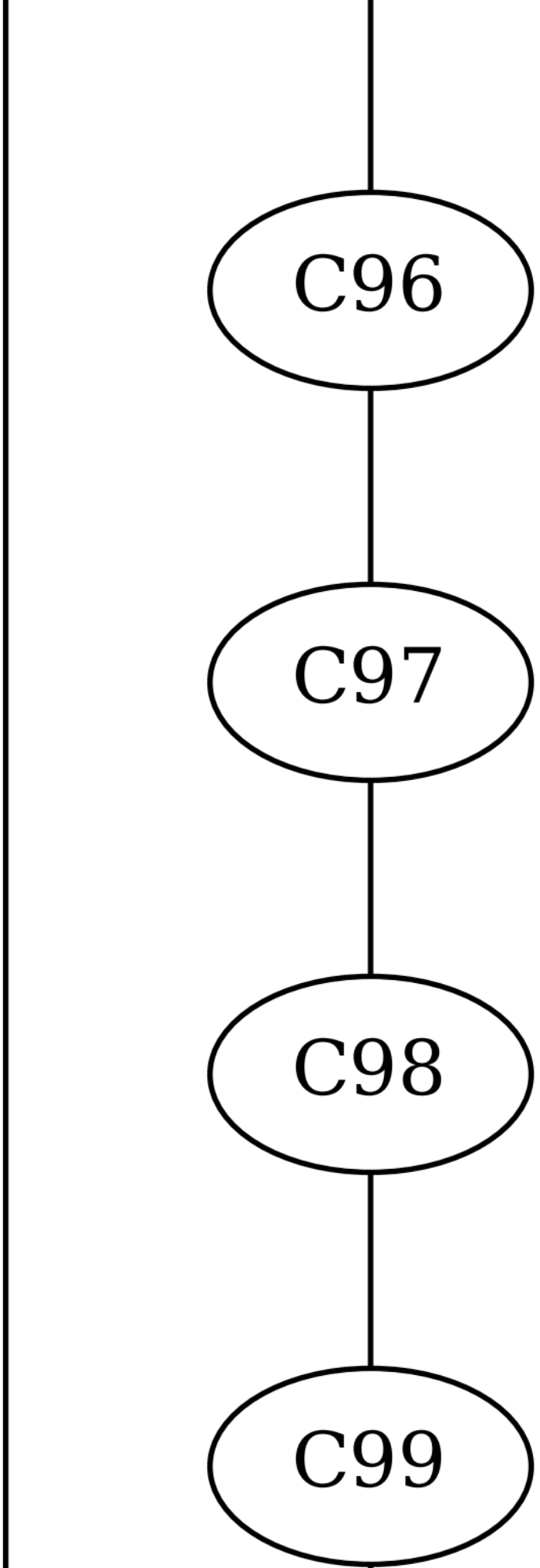
C96
C97
C98
C99

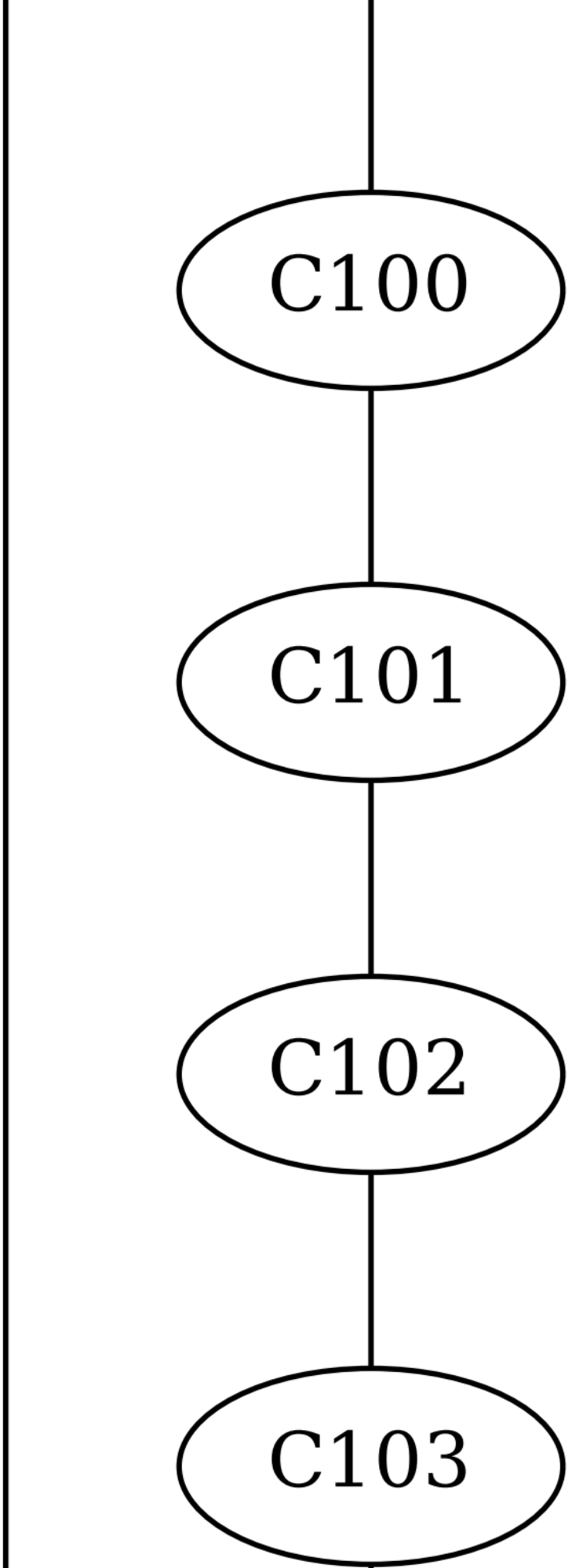
C100
C101
C102
C103

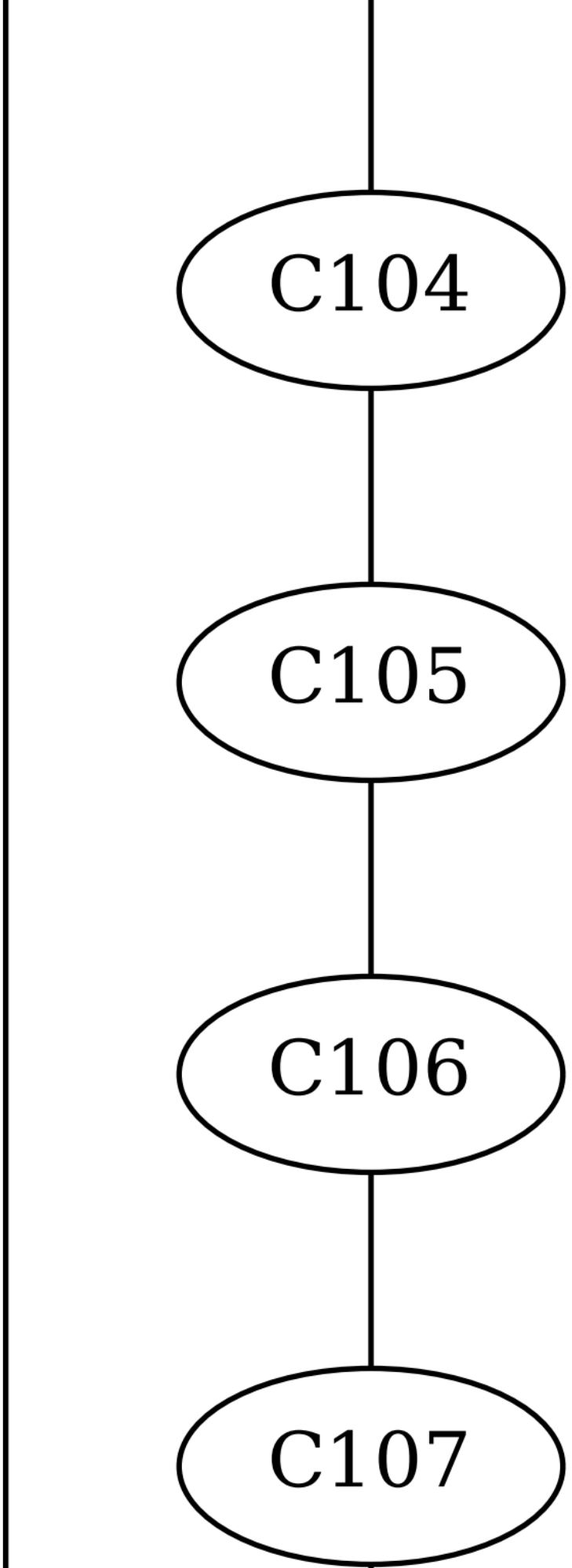
C104
C105
C106
C107

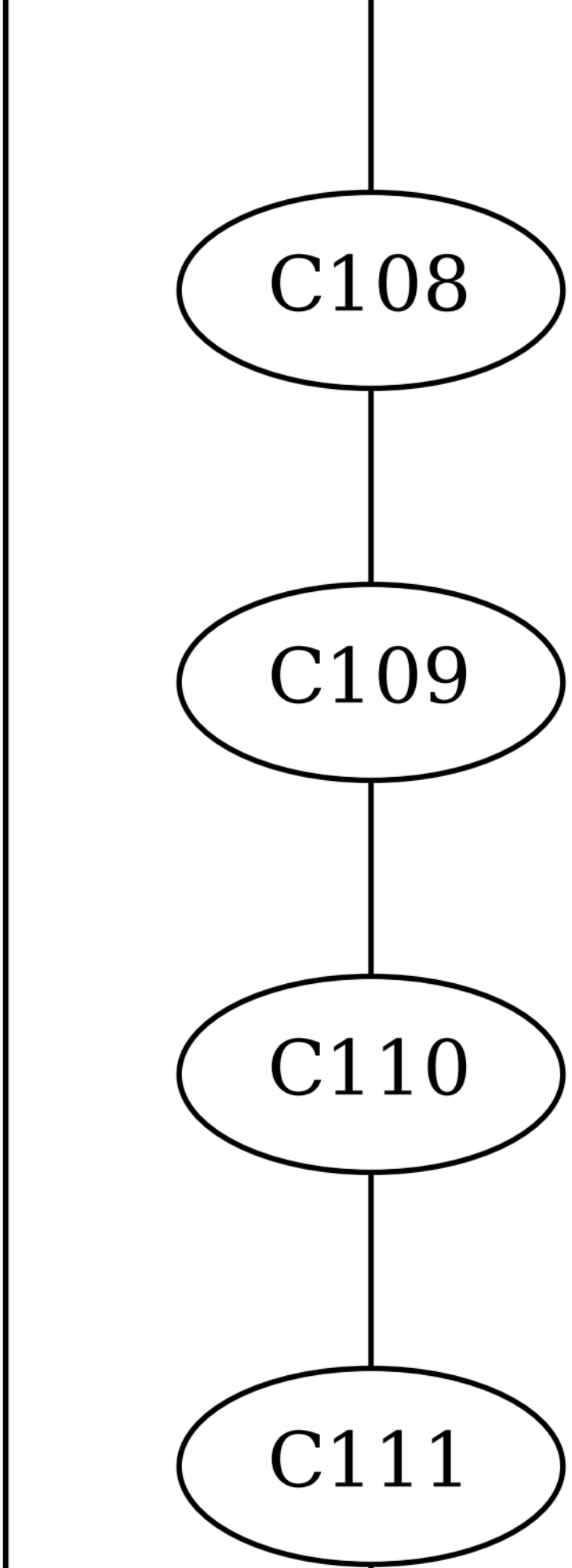
C108
C109
C110
C111

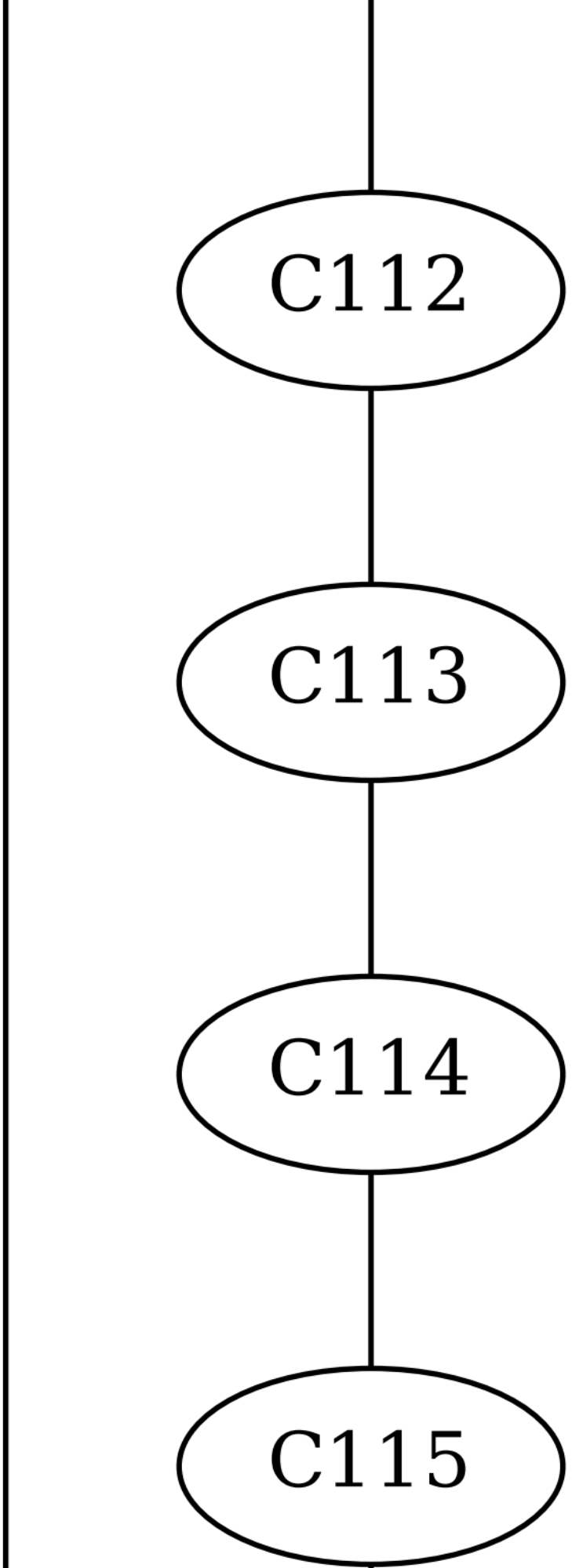
C112
C113
C114
C115

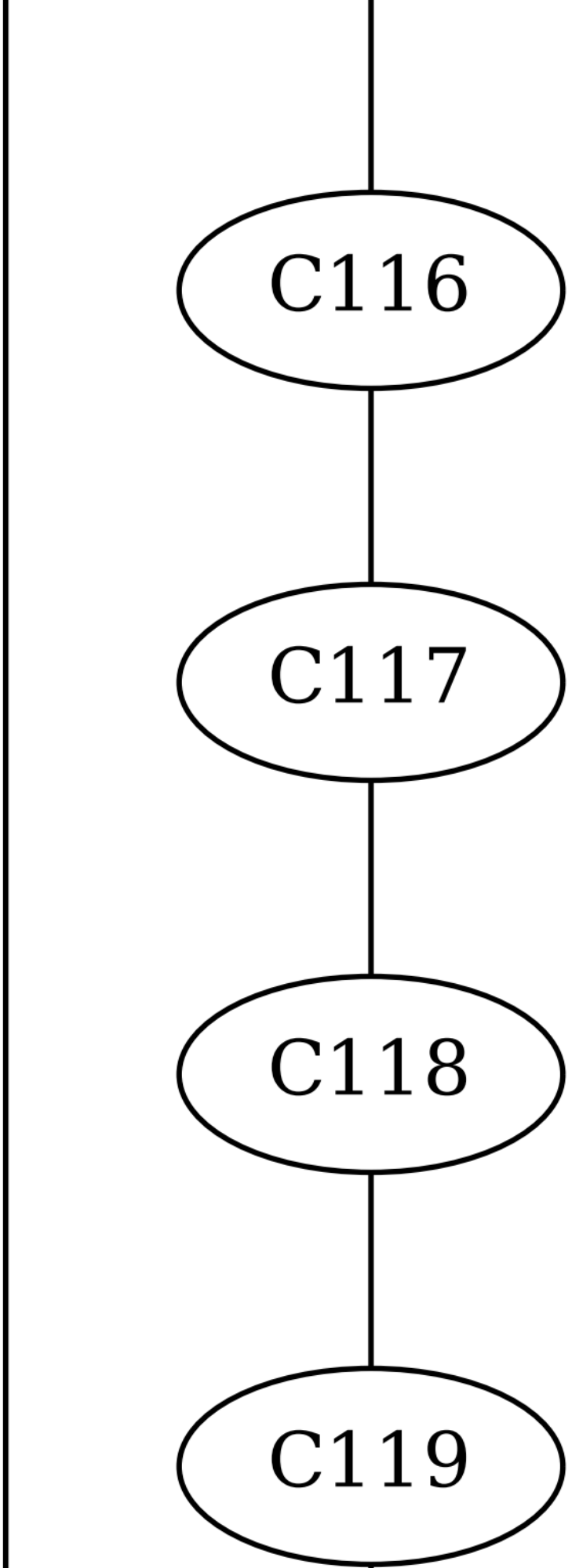
C116
C117
C118
C119

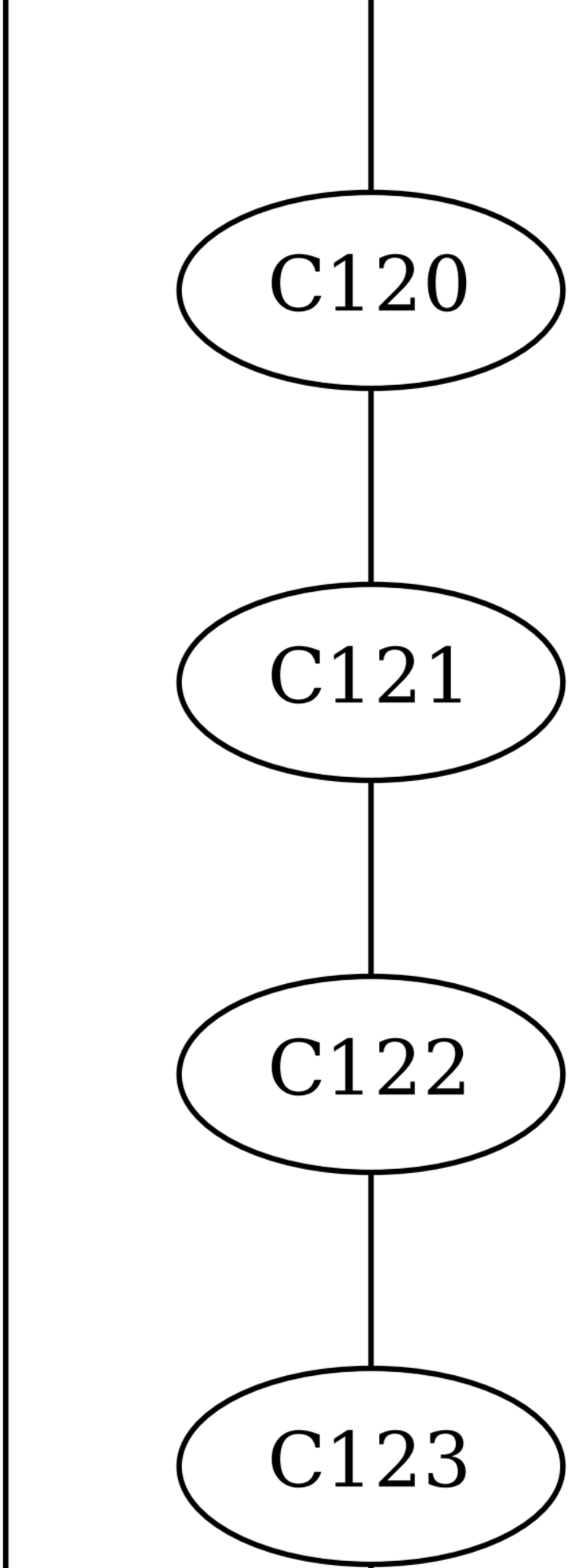
C120
C121
C122
C123

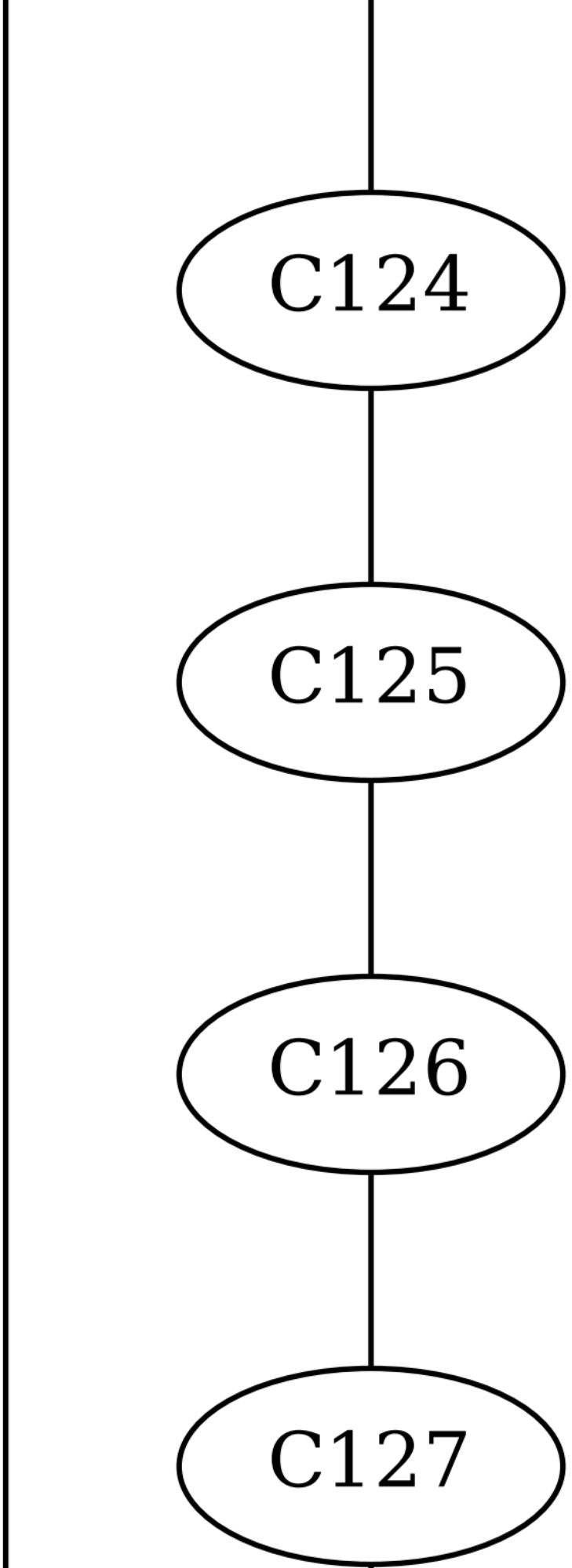
C124
C125
C126
C127

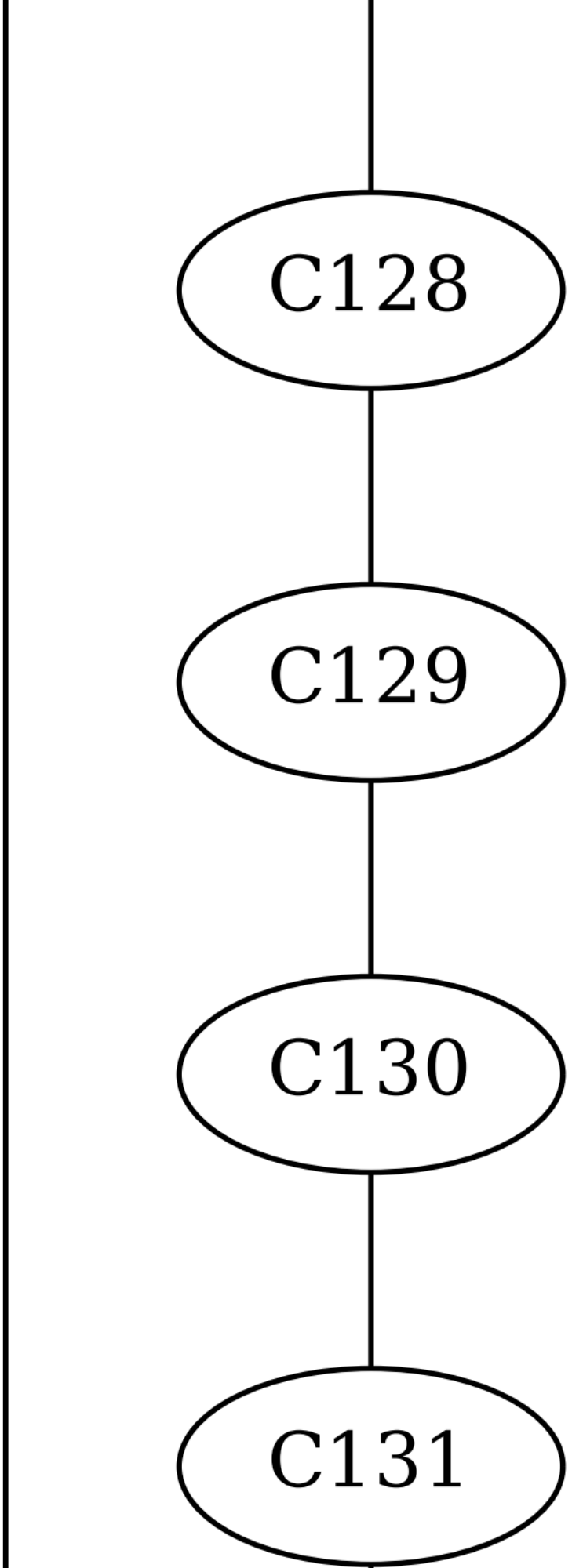
C128
C129
C130
C131

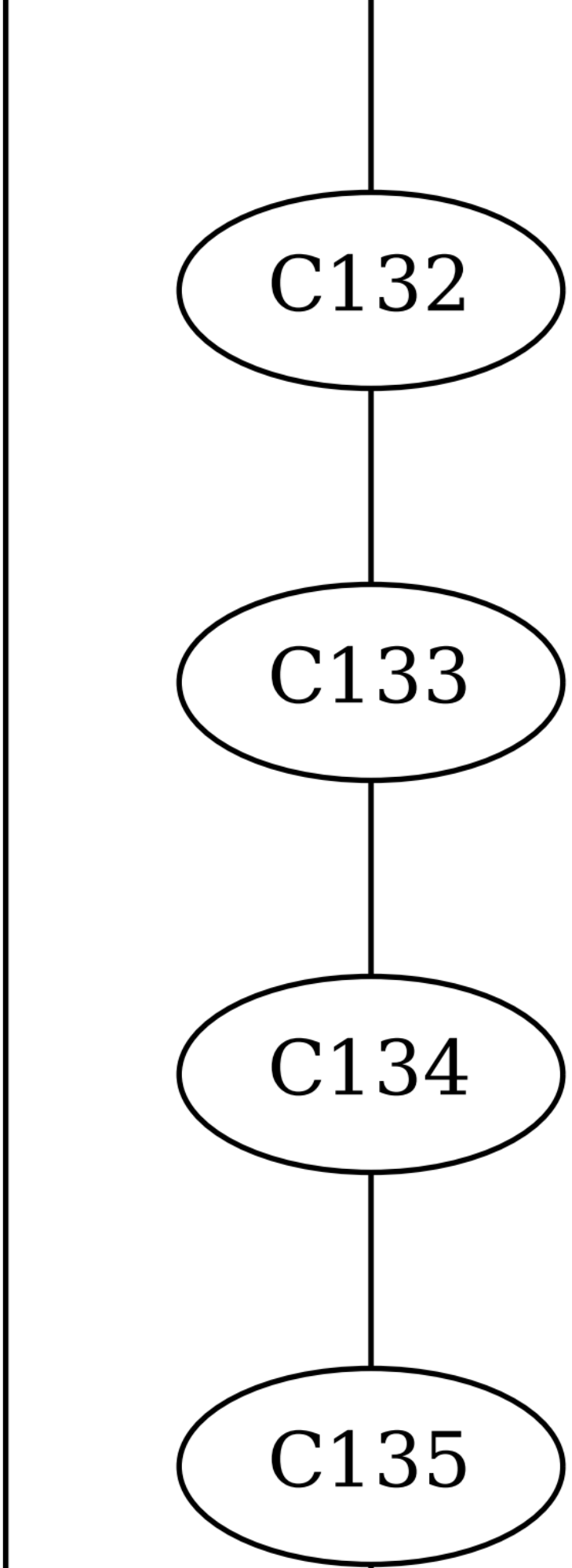
C132
C133
C134
C135

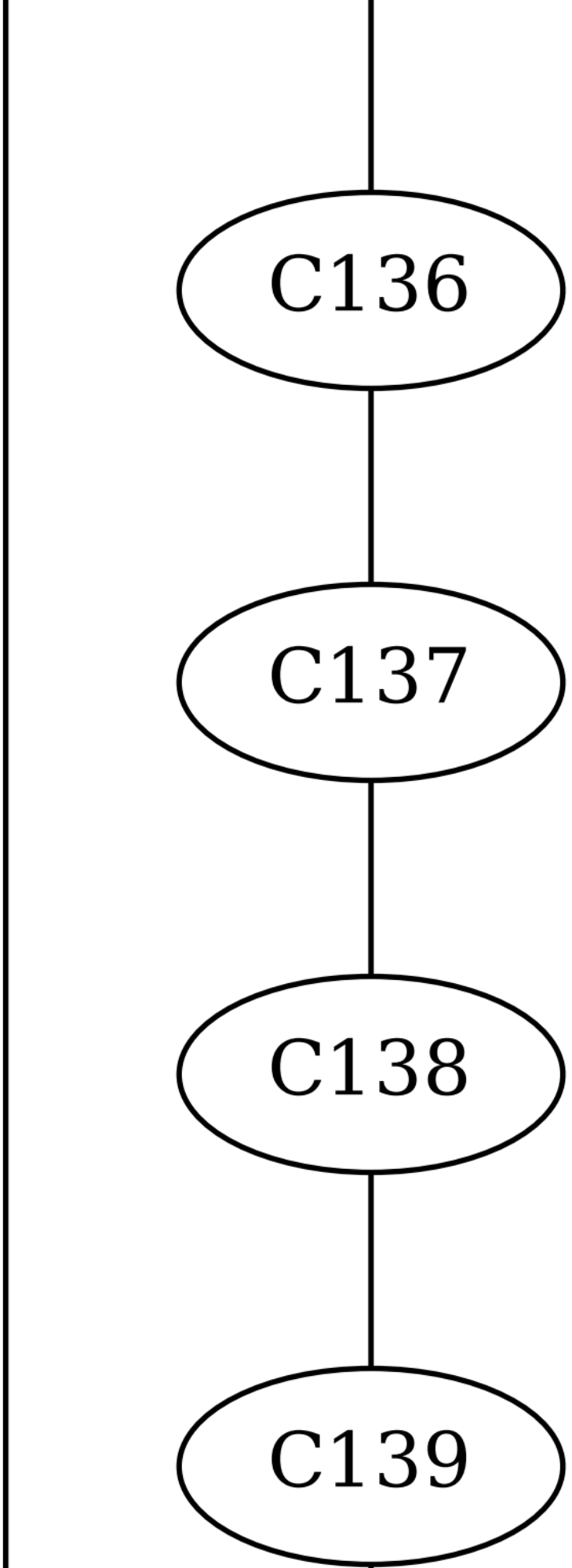
C136
C137
C138
C139

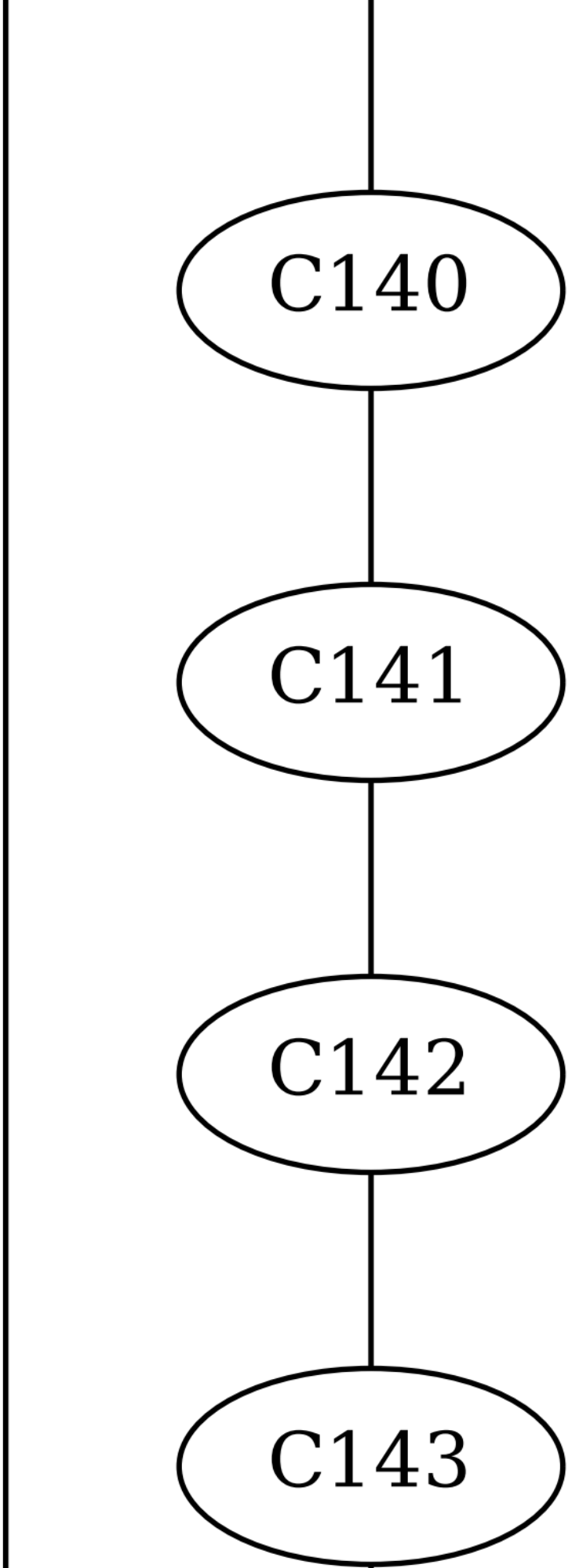
C140
C141
C142
C143

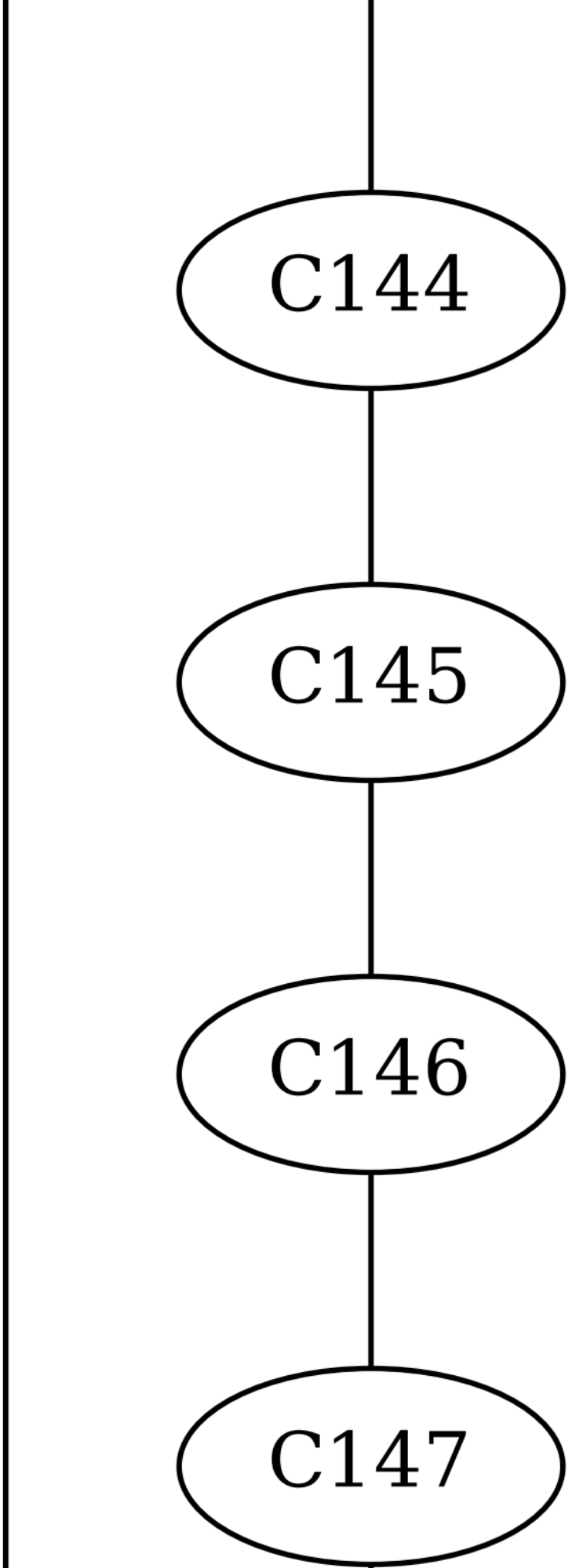
C144
C145
C146
C147

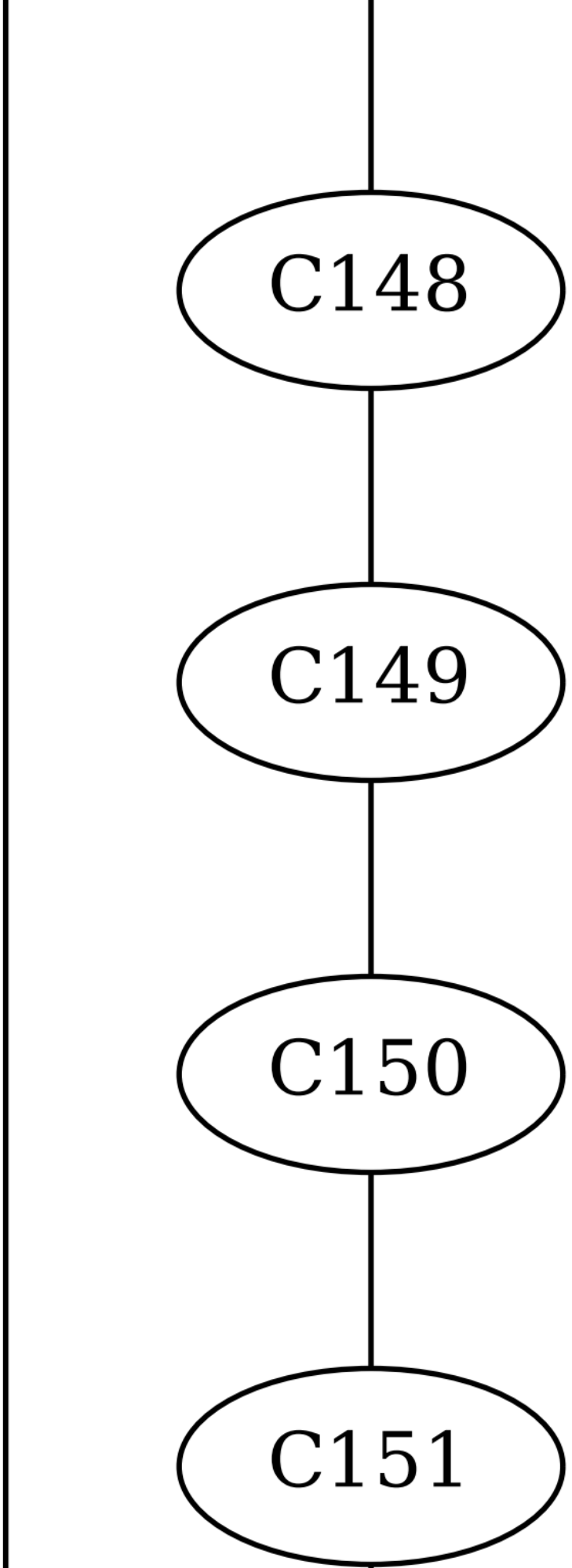
C148
C149
C150
C151

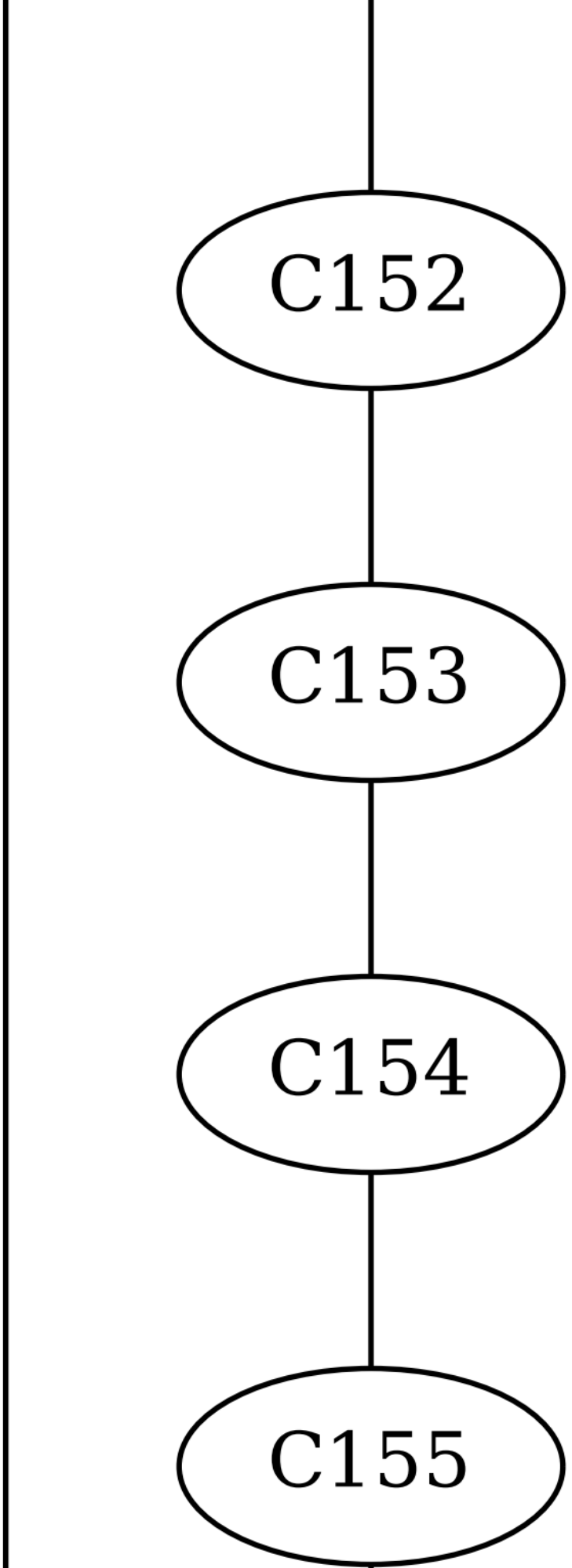
C152
C153
C154
C155

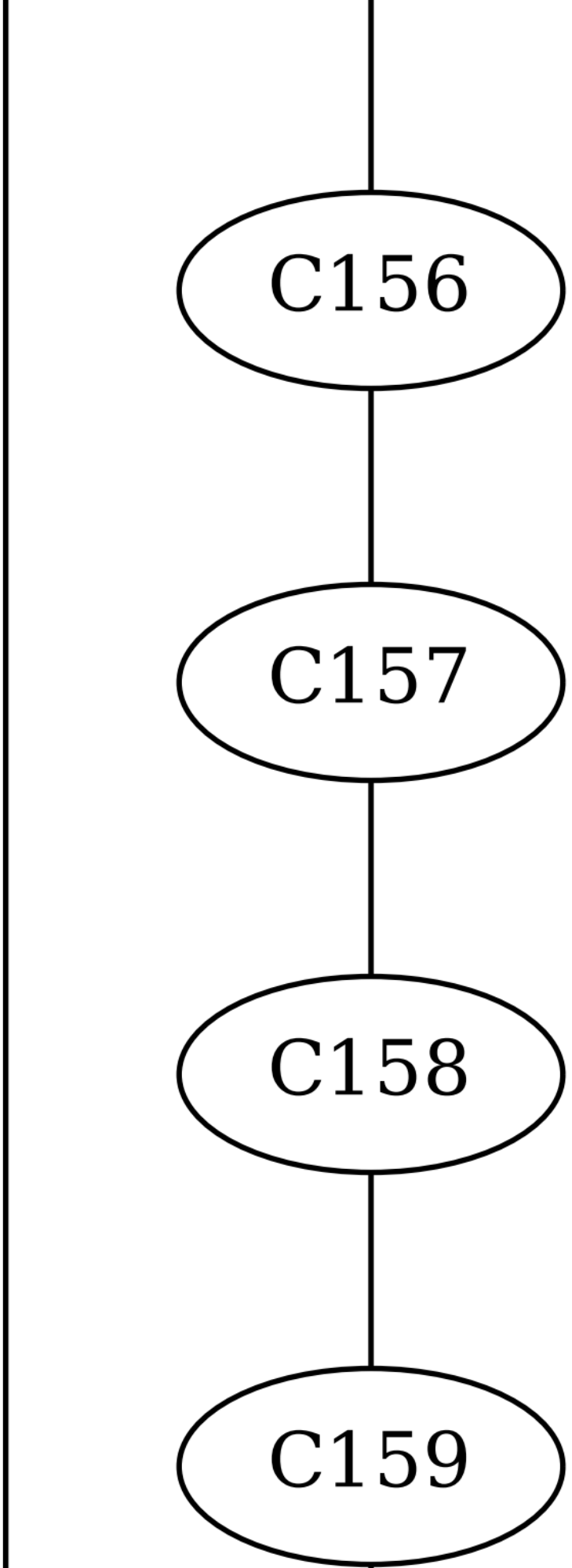
C156
C157
C158
C159

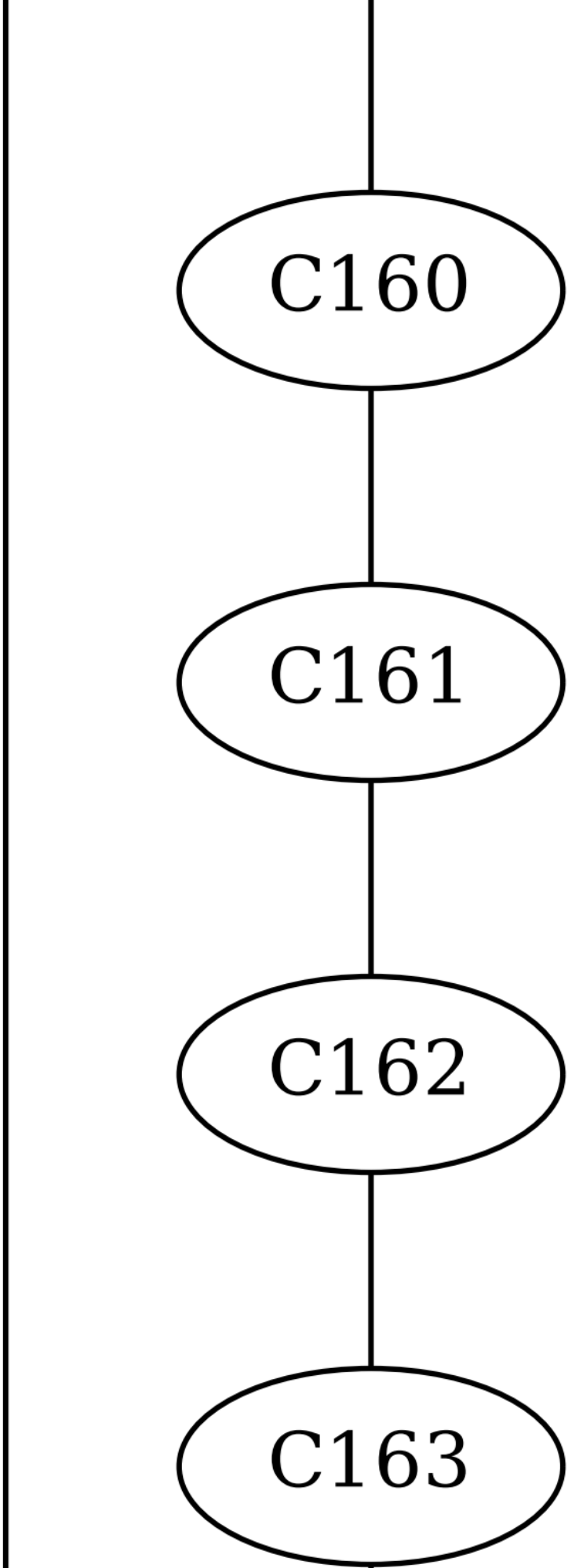
C160
C161
C162
C163

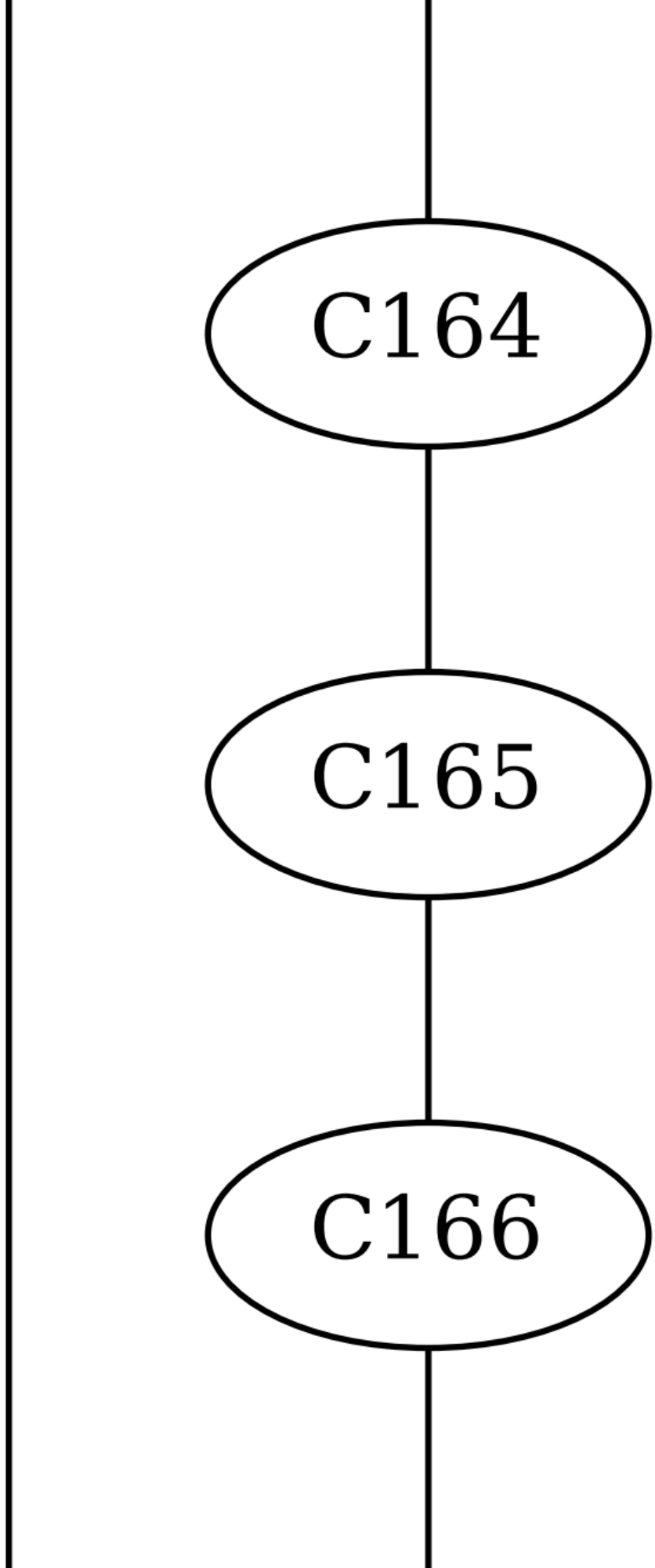
C164
C165
C166

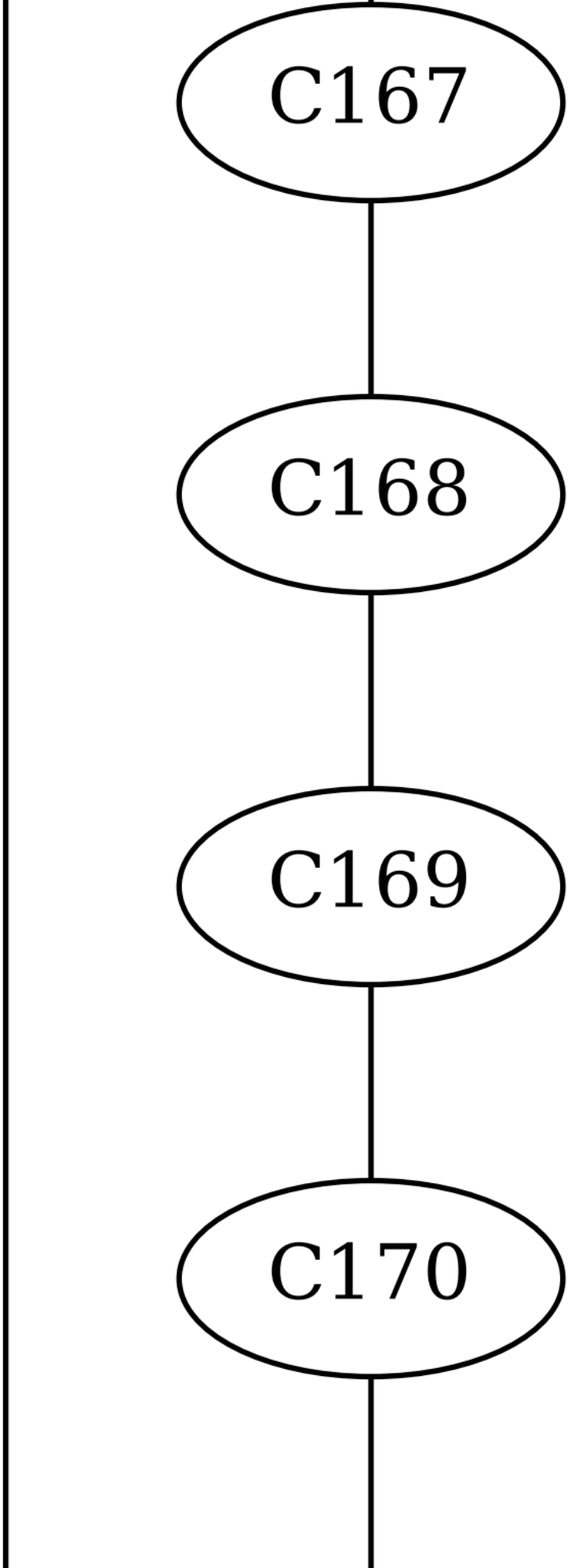
C167
C168
C169
C170

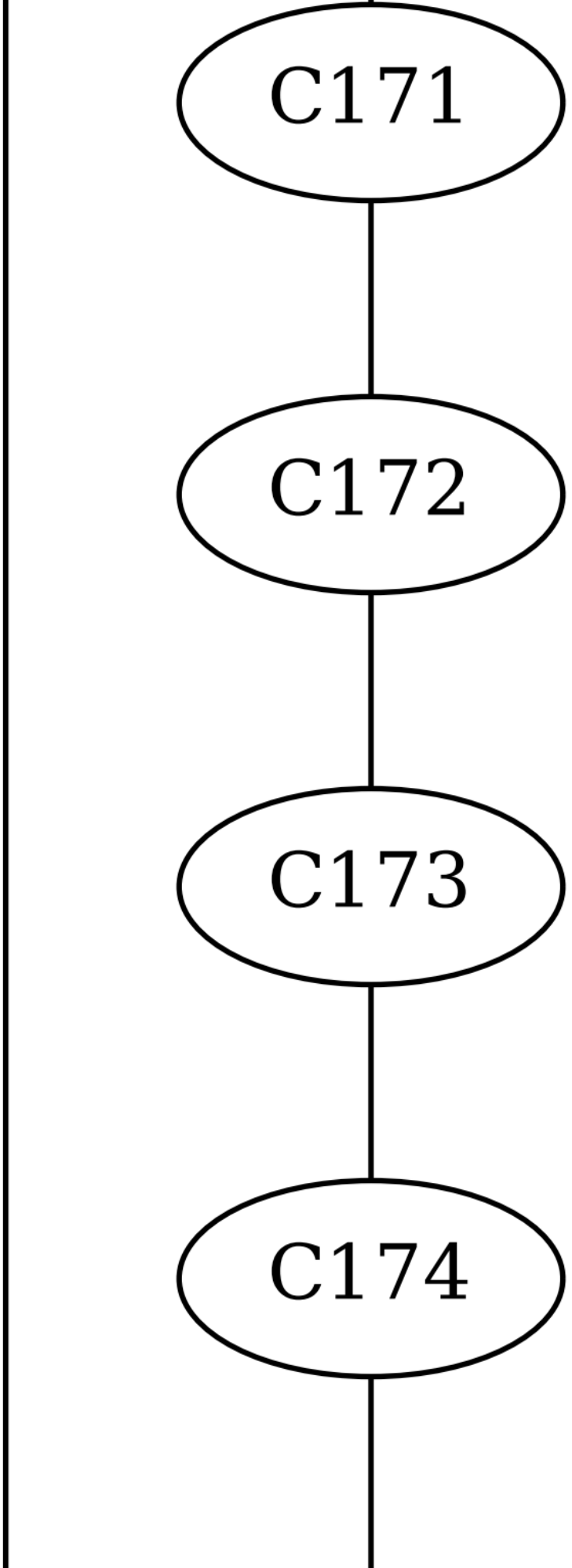
C171
C172
C173
C174

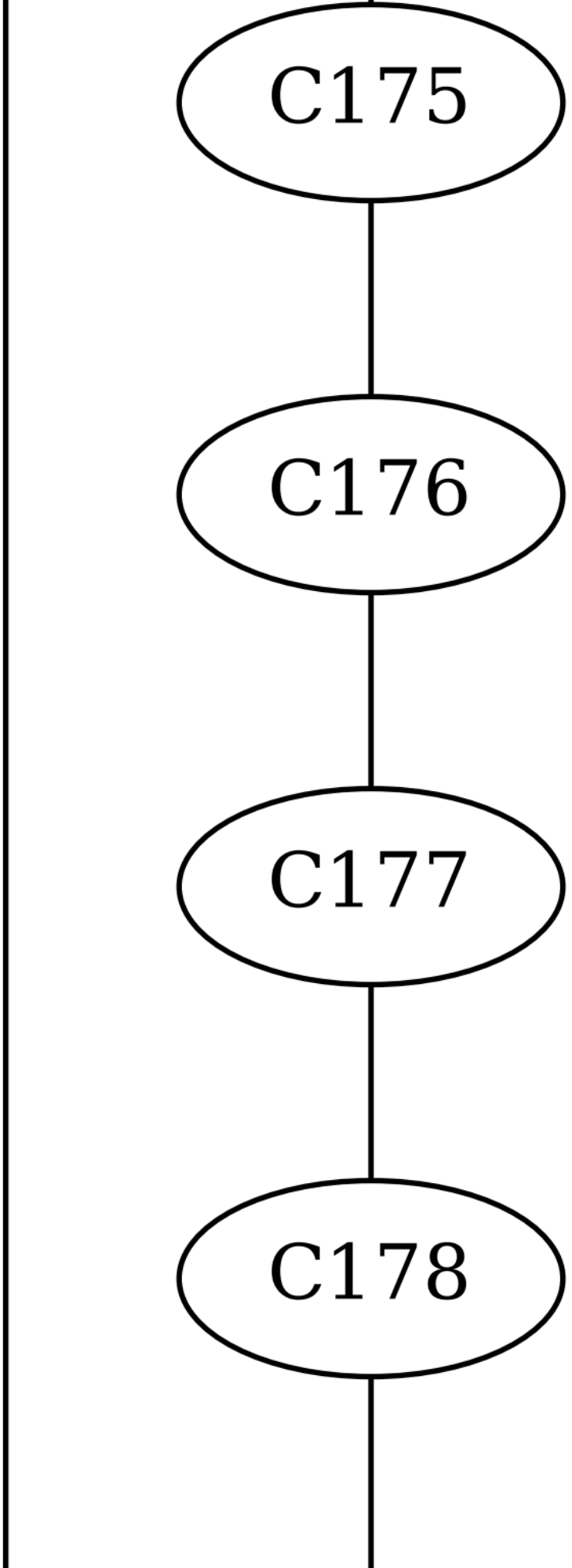
C175
C176
C177
C178

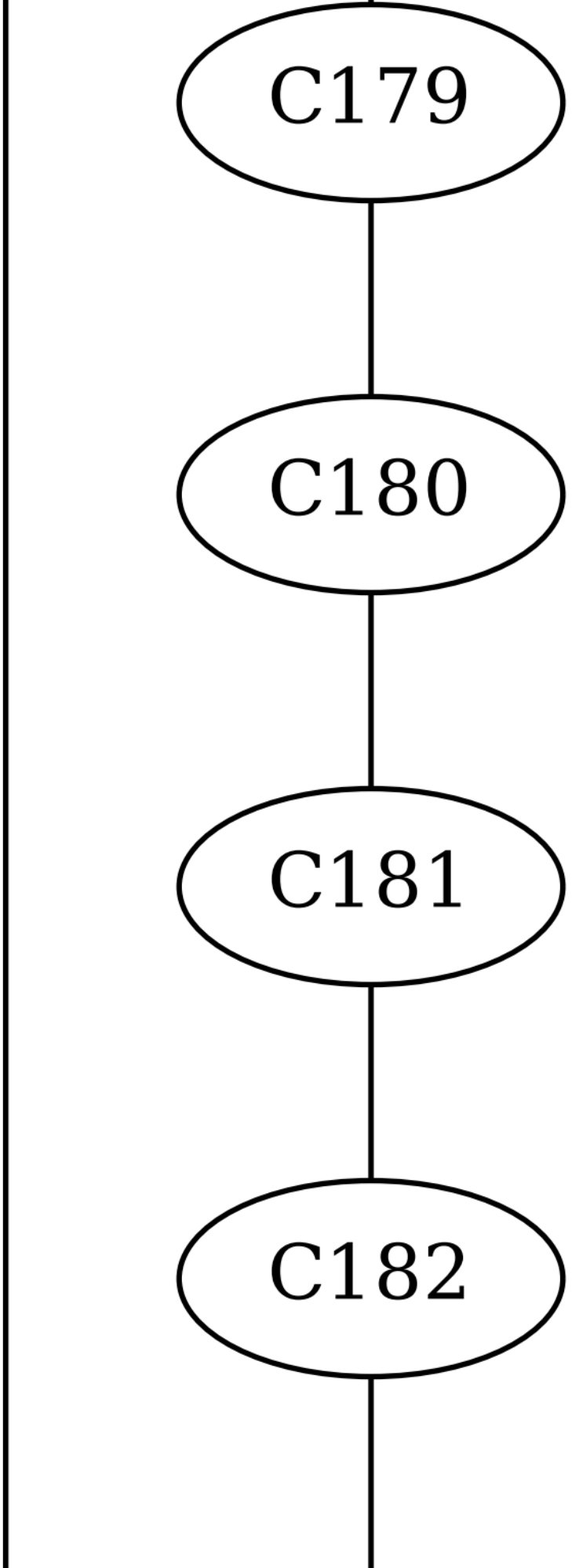
C179
C180
C181
C182

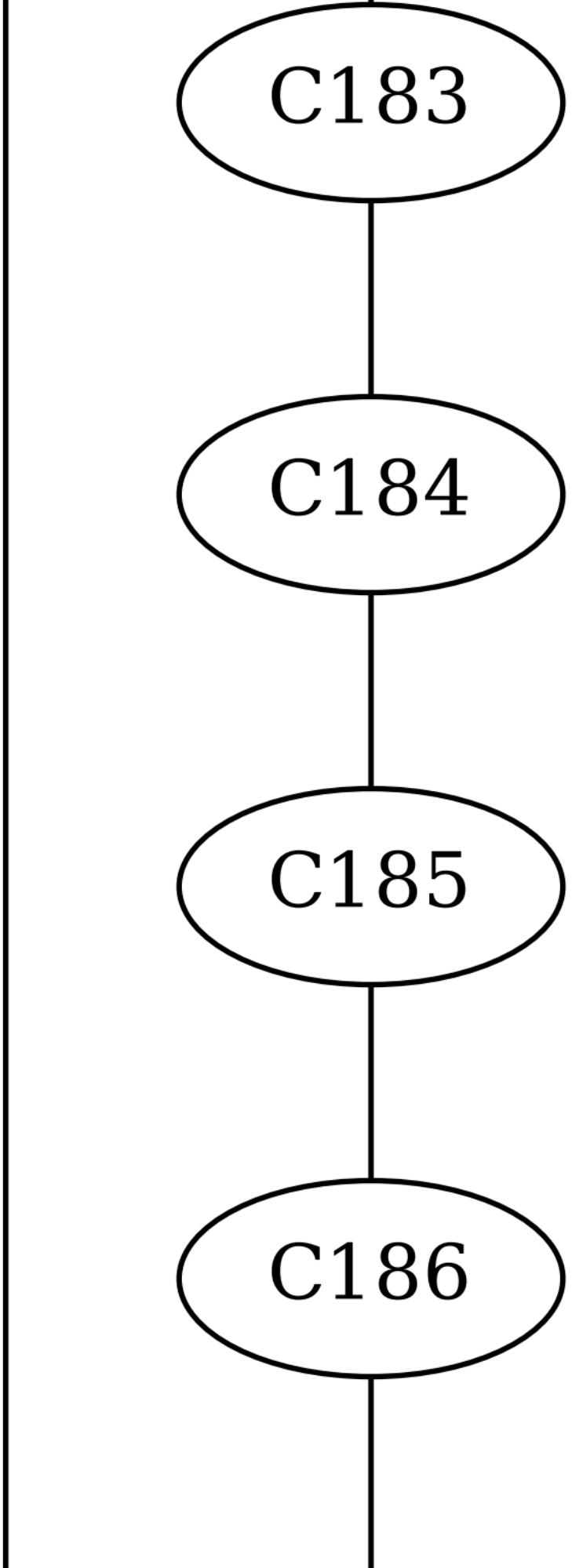
C183
C184
C185
C186

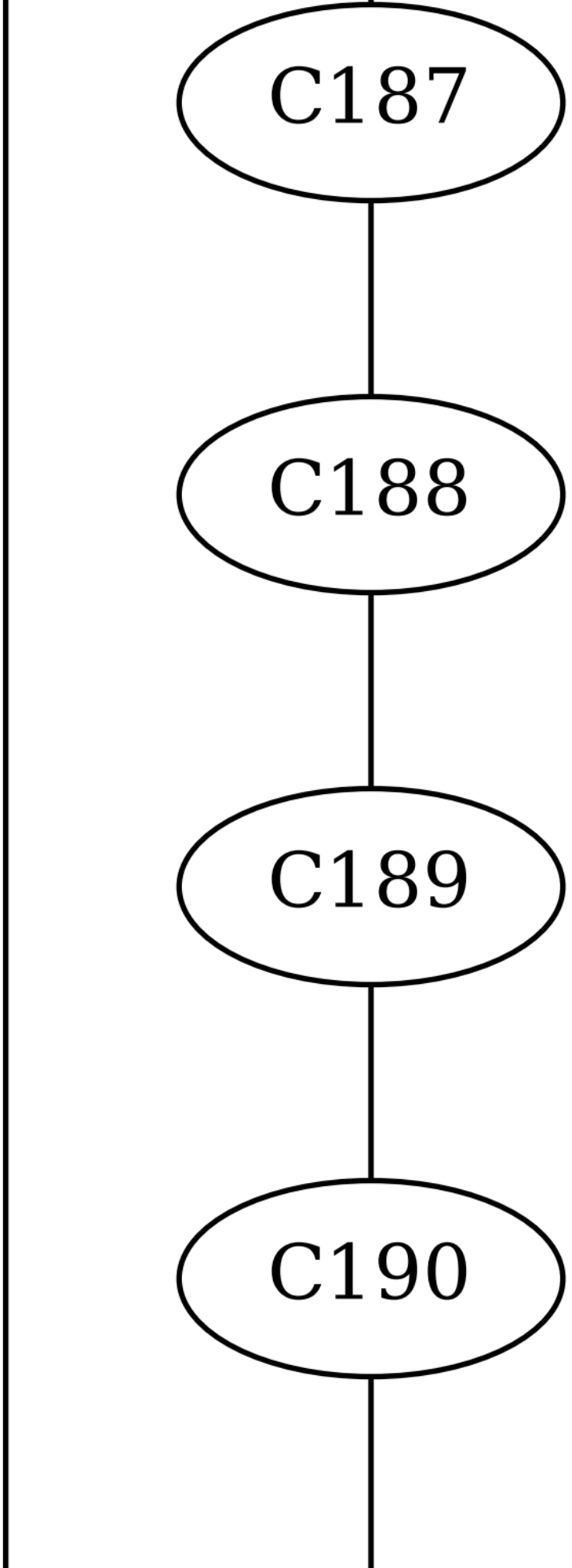
C187
C188
C189
C190

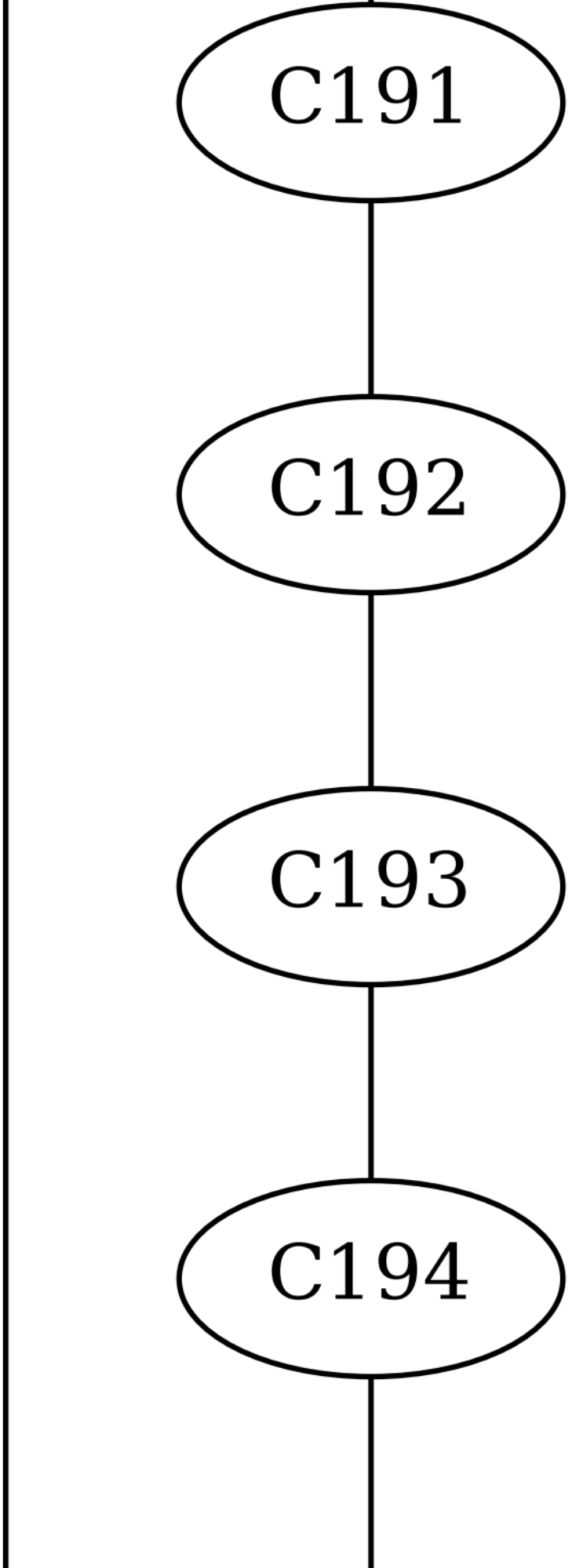
C191
C192
C193
C194

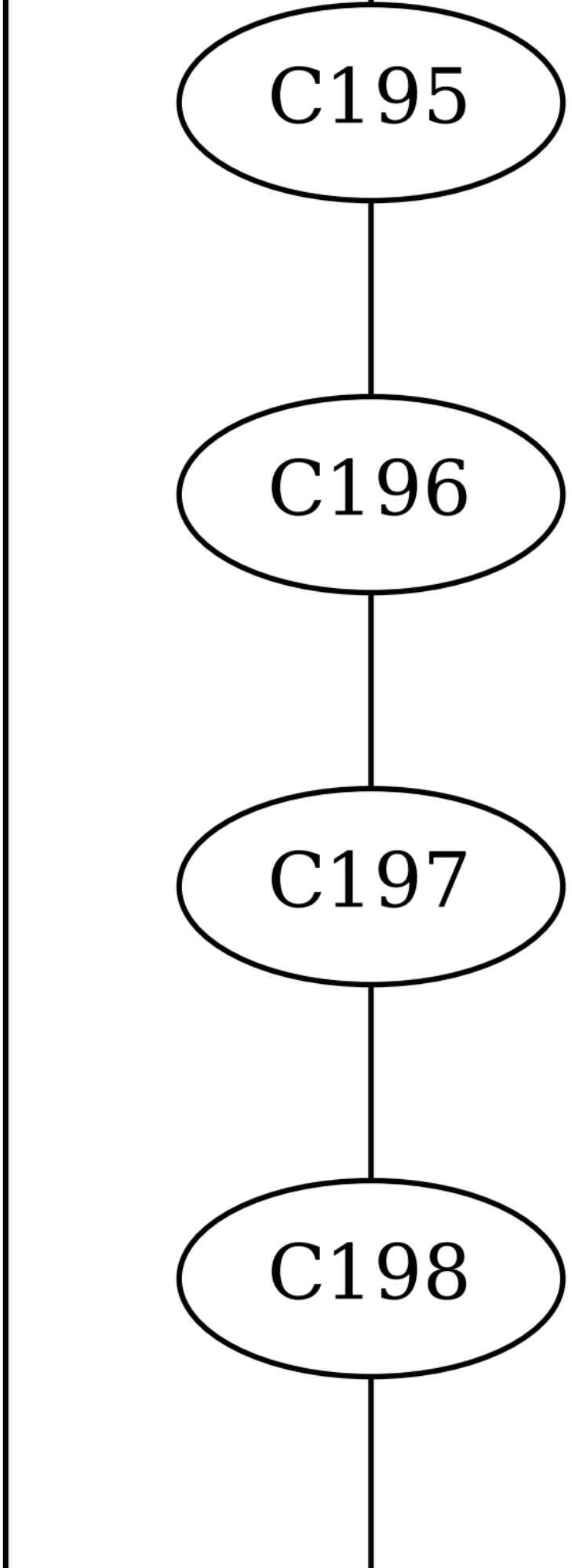
C195
C196
C197
C198

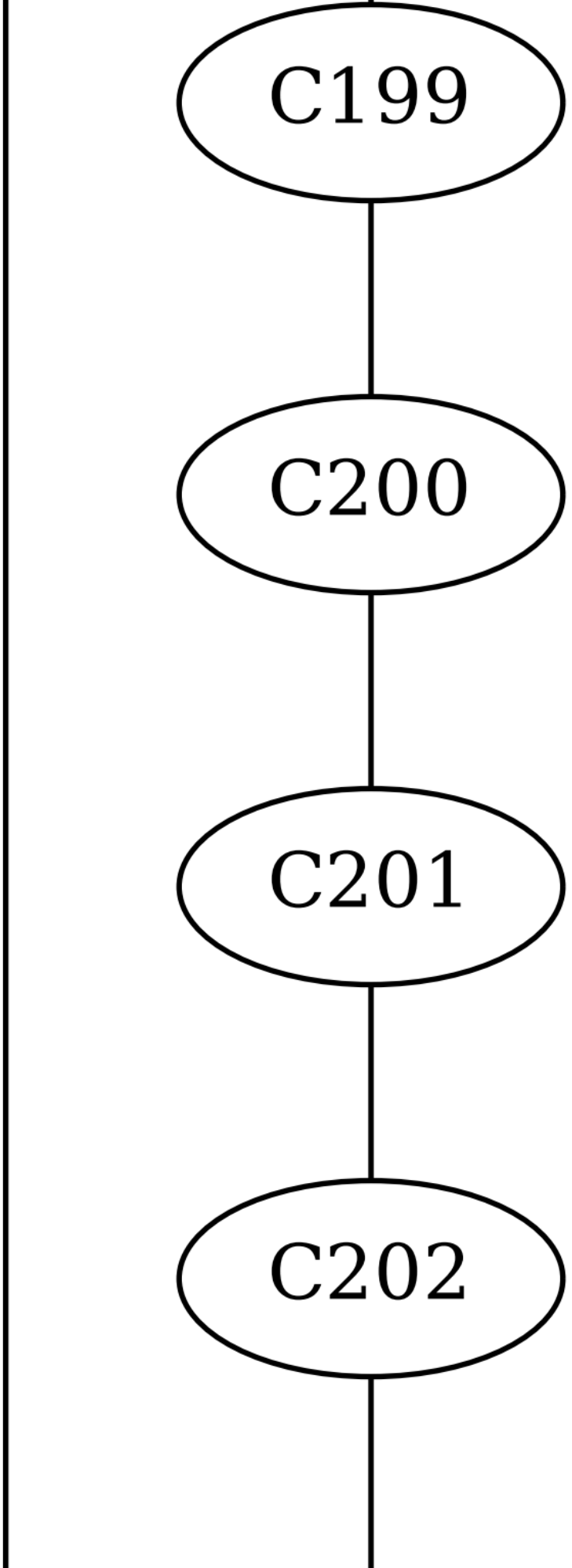
C199
C200
C201
C202

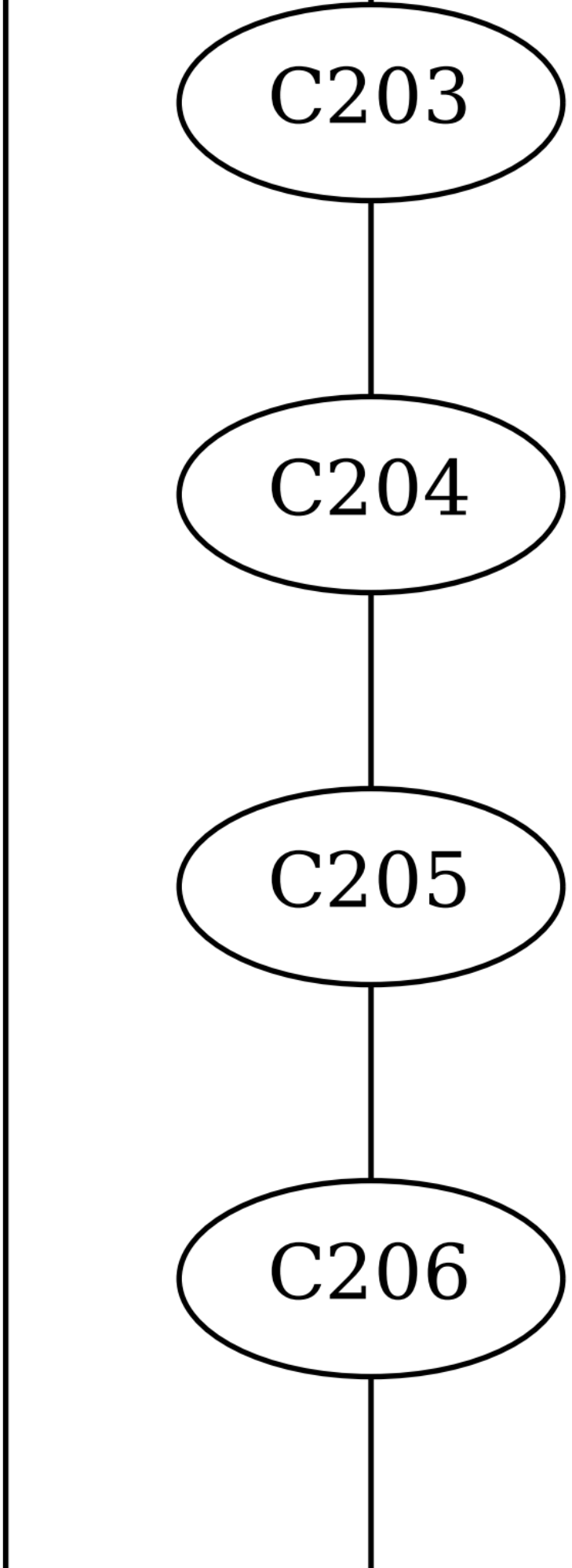
C203
C204
C205
C206

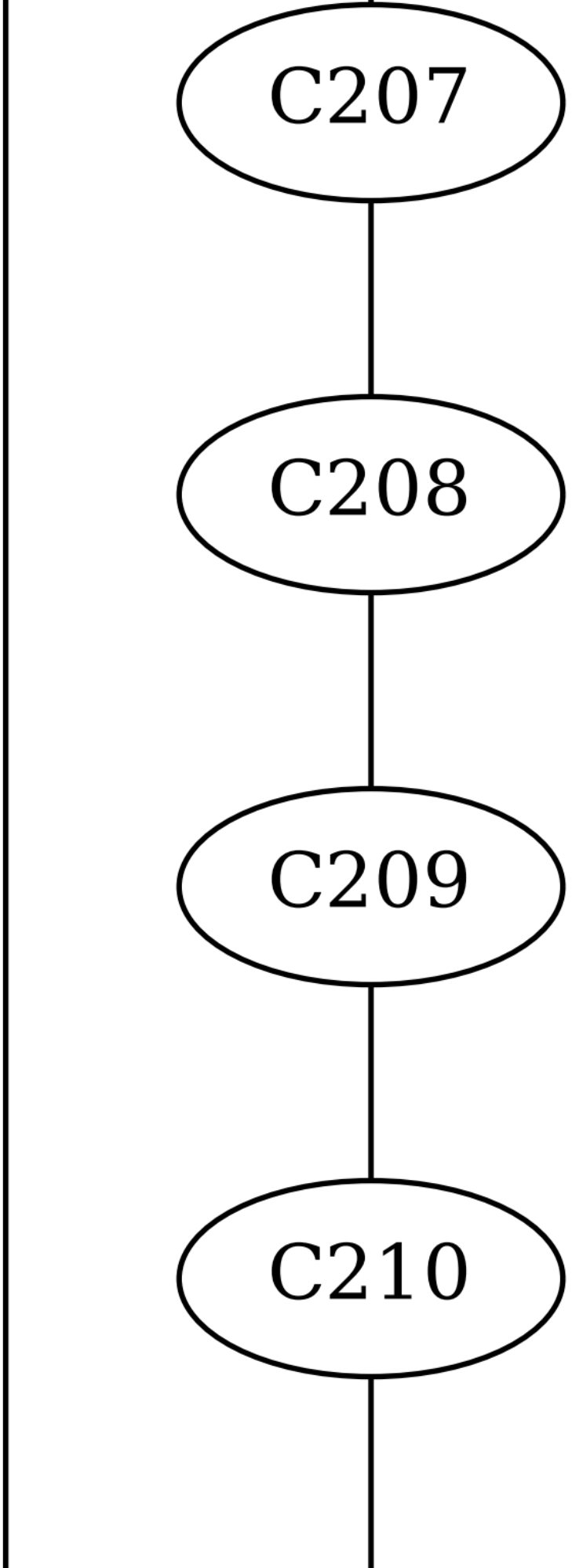
C207
C208
C209
C210

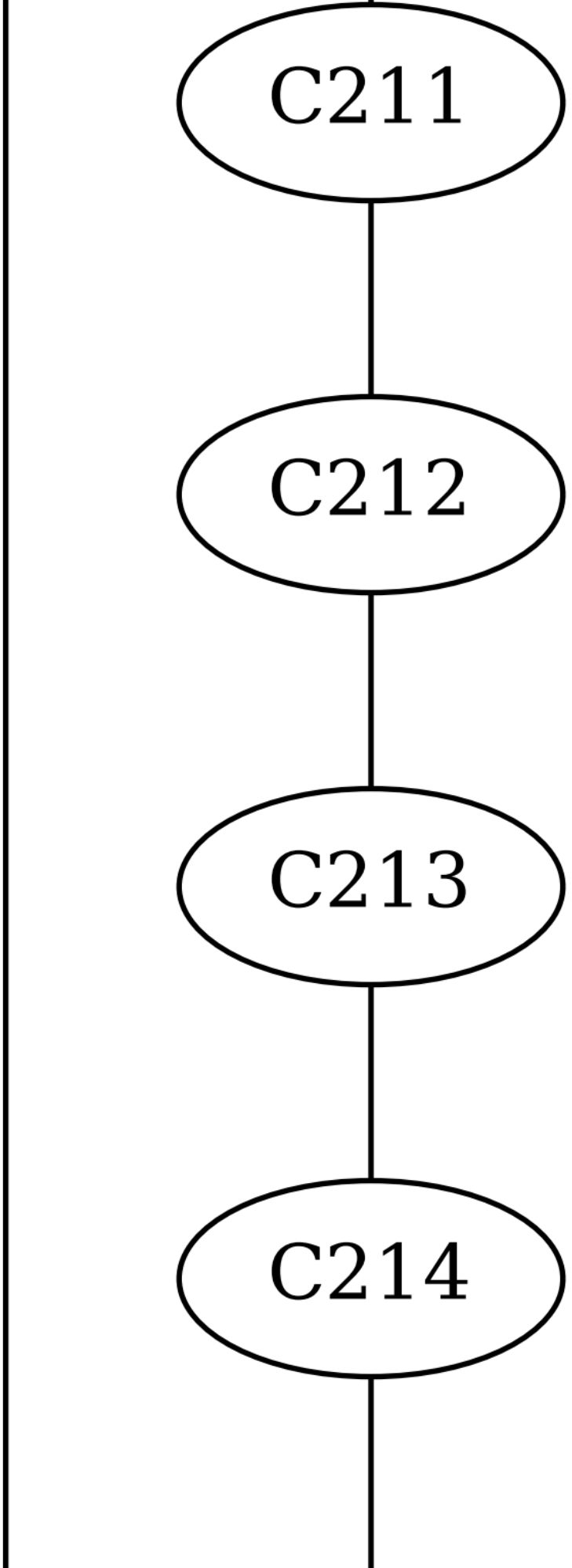
C211
C212
C213
C214

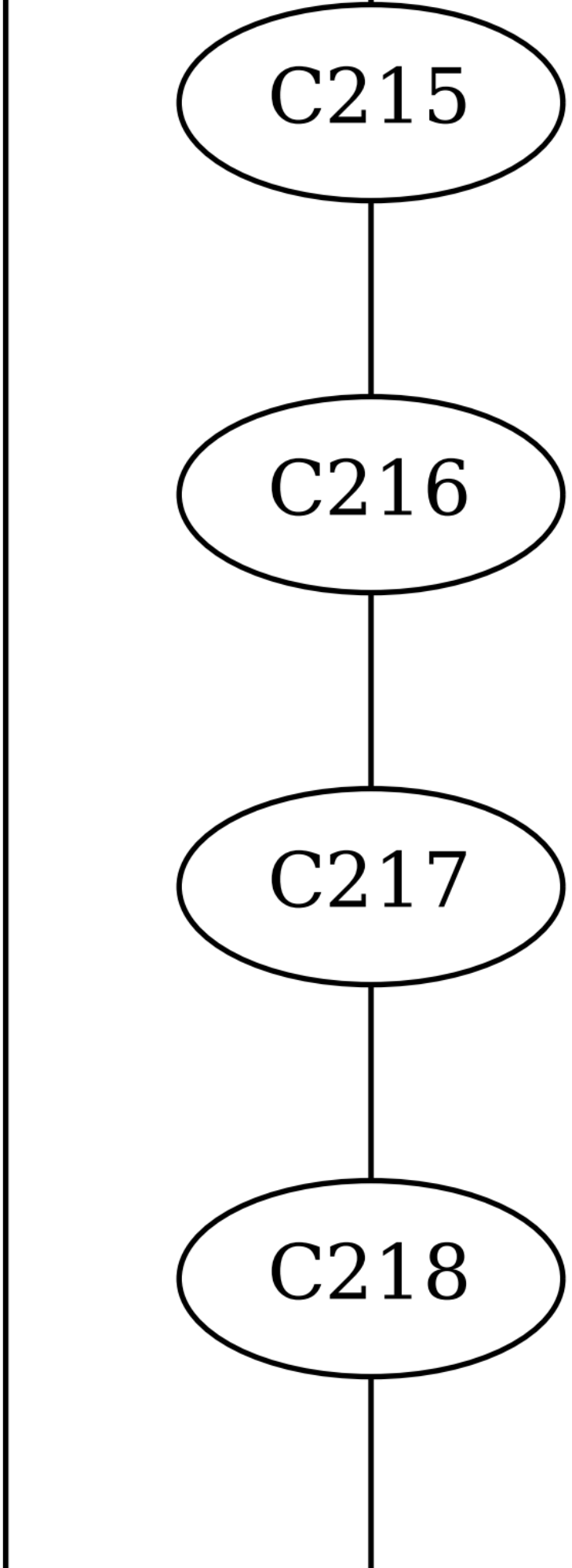
C215
C216
C217
C218

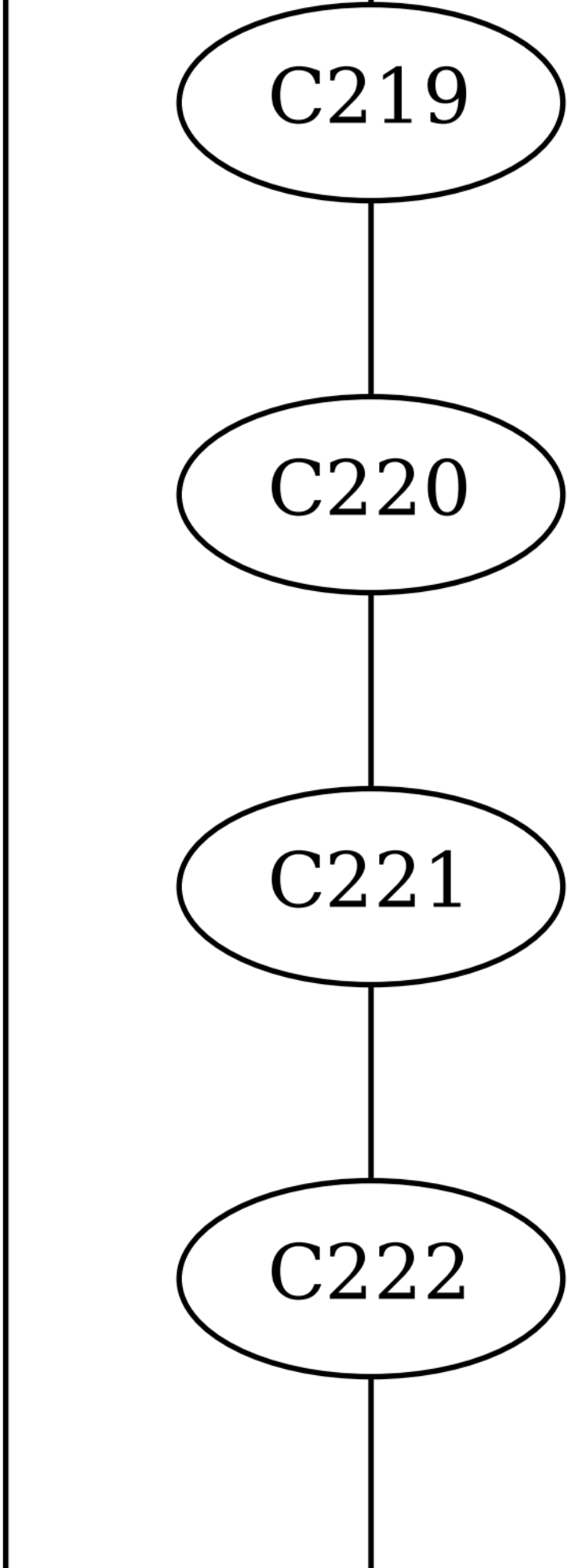
C219
C220
C221
C222

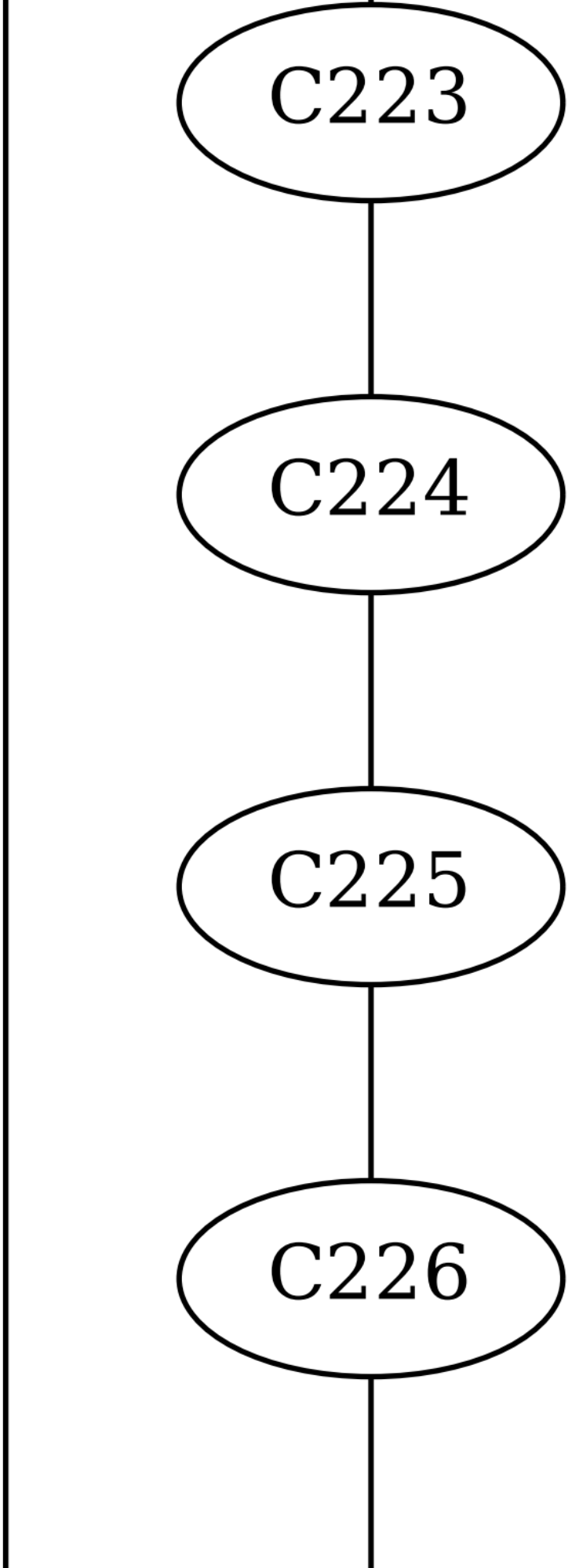
C223
C224
C225
C226

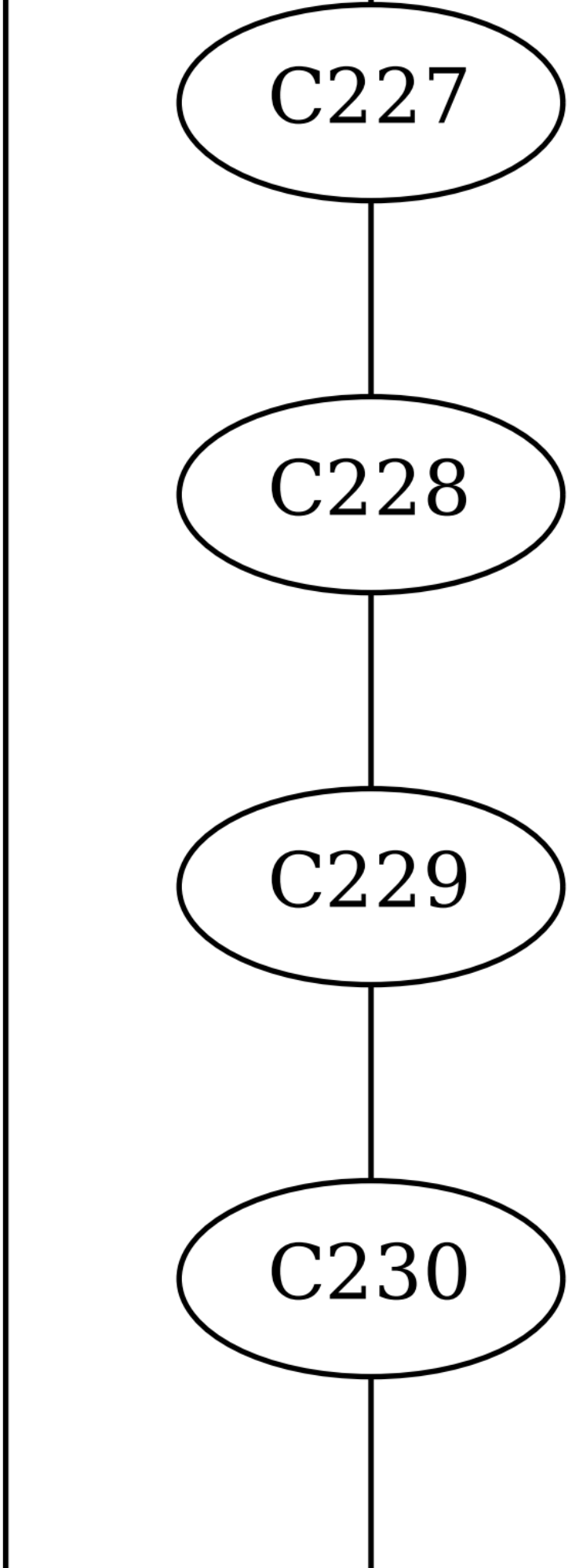
C227
C228
C229
C230

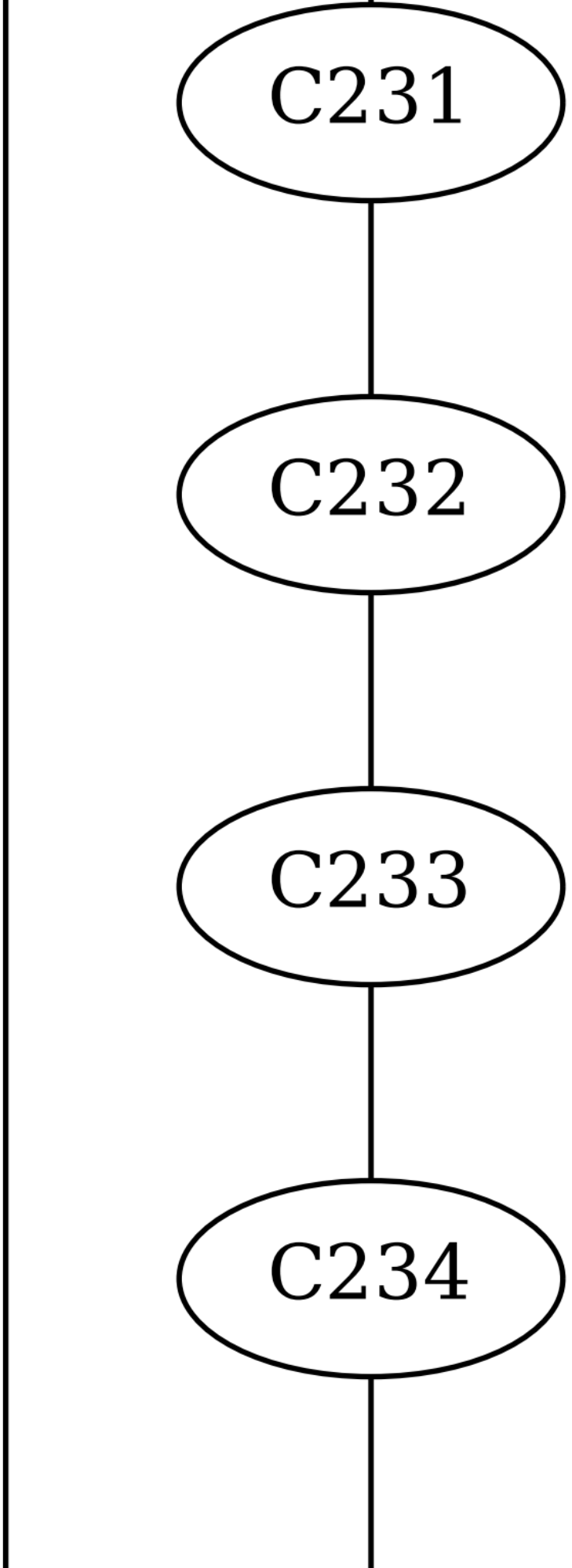
C231
C232
C233
C234

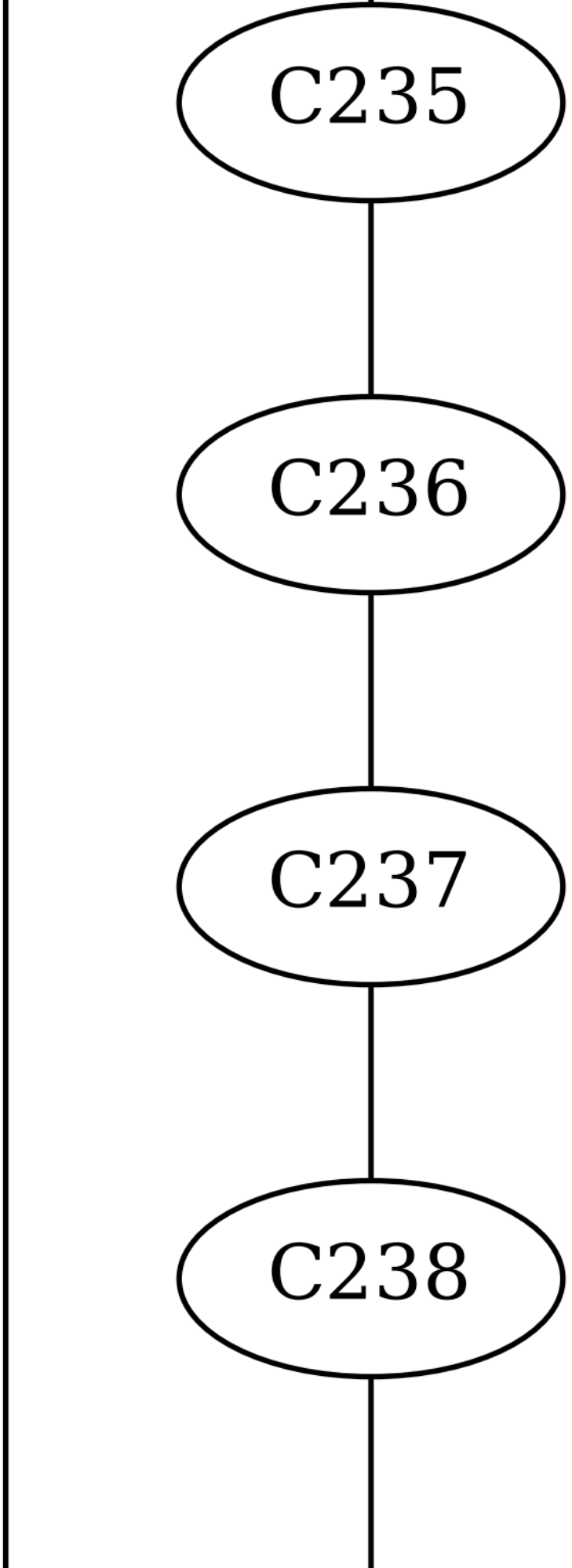
C235
C236
C237
C238

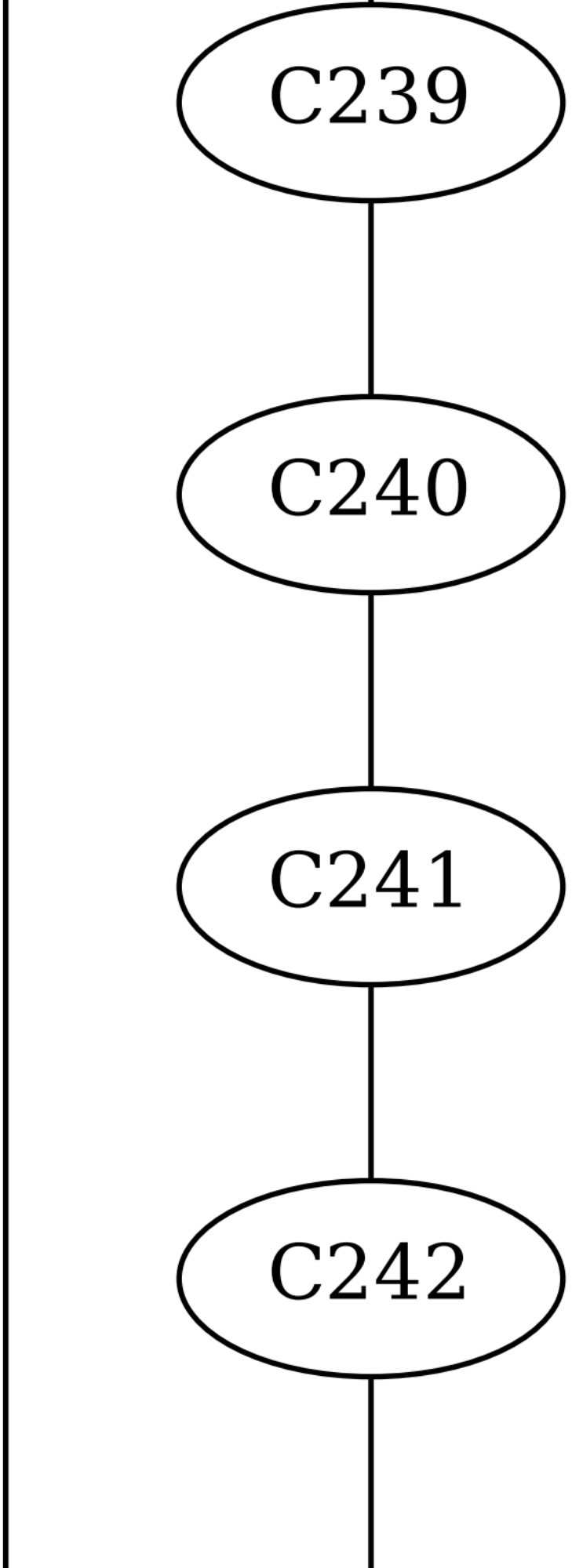
C239
C240
C241
C242

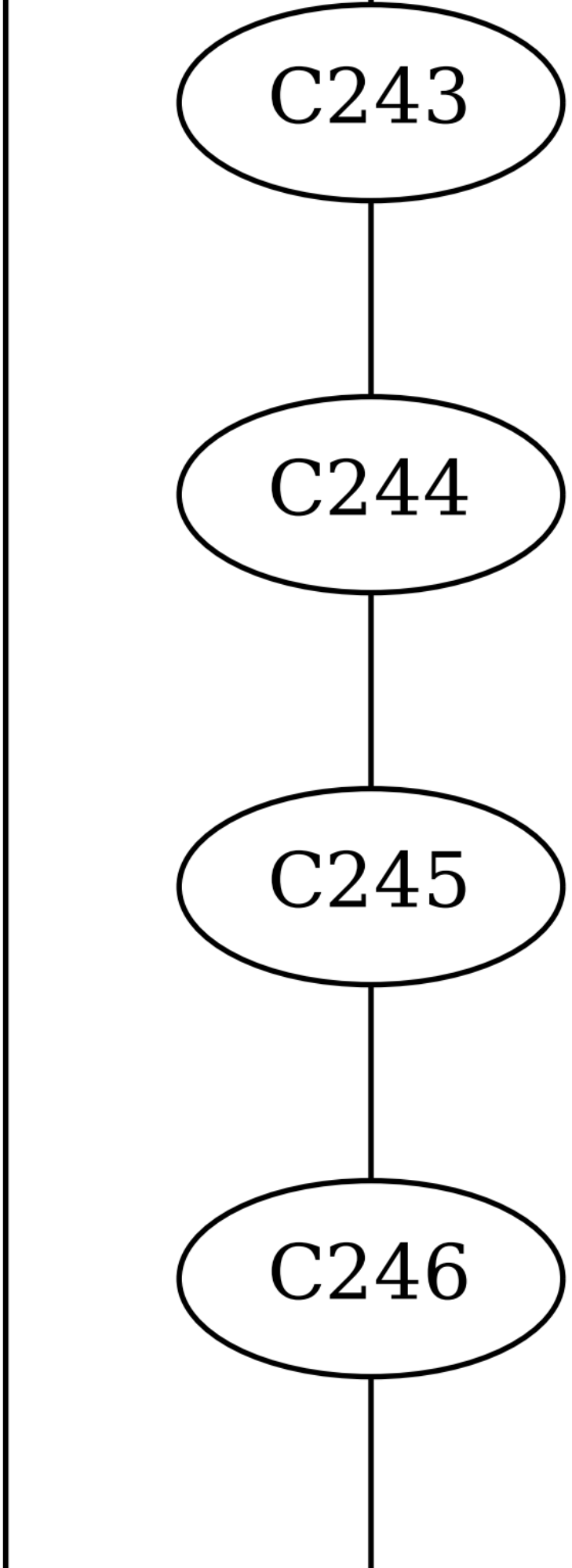
C243
C244
C245
C246

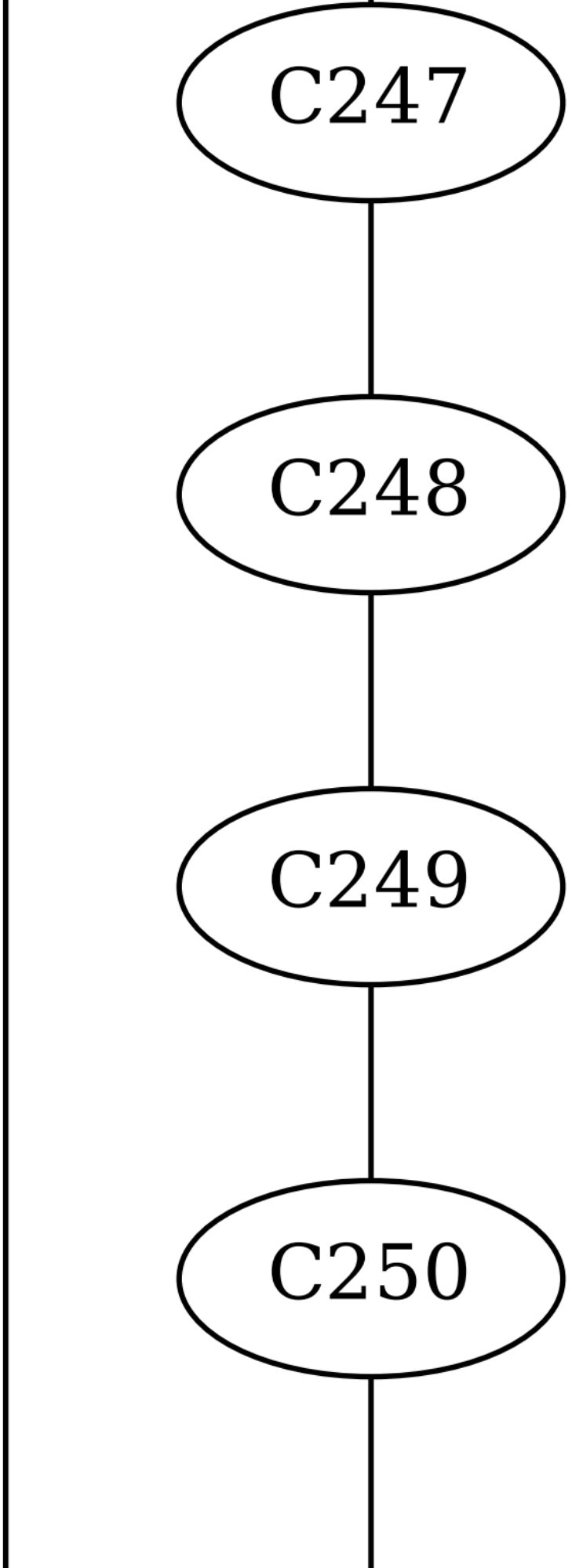
C247
C248
C249
C250

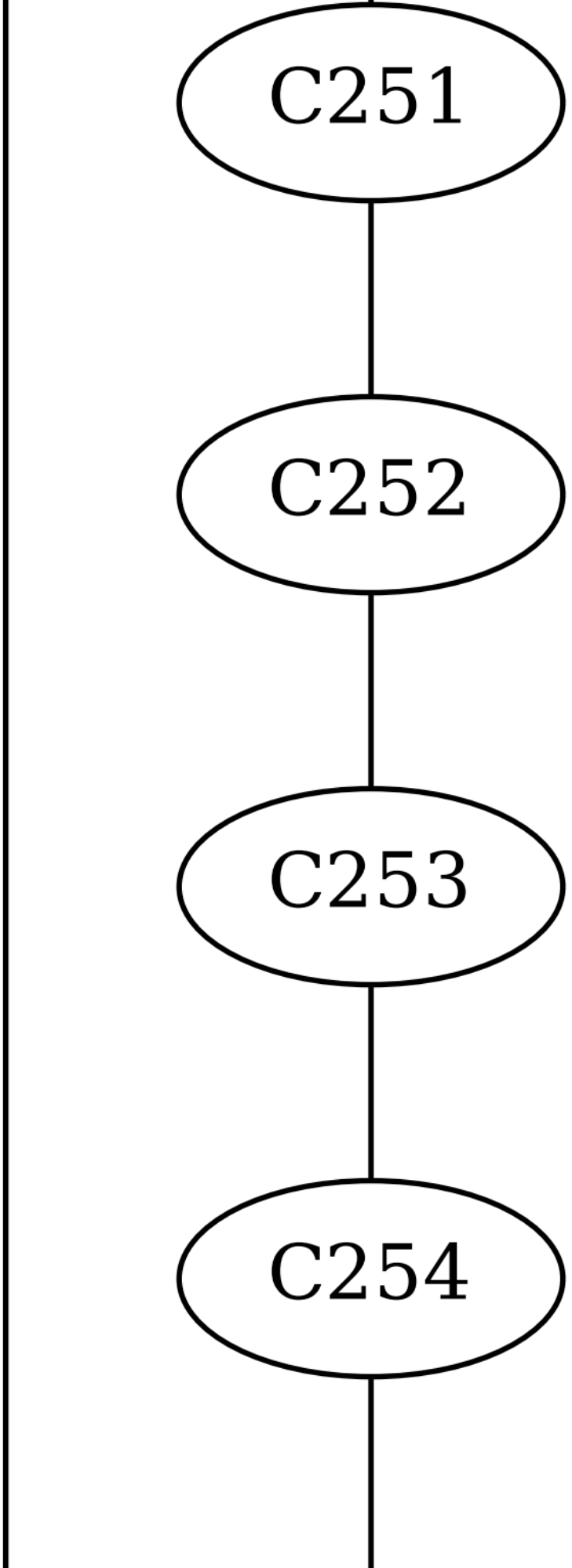
C251
C252
C253
C254

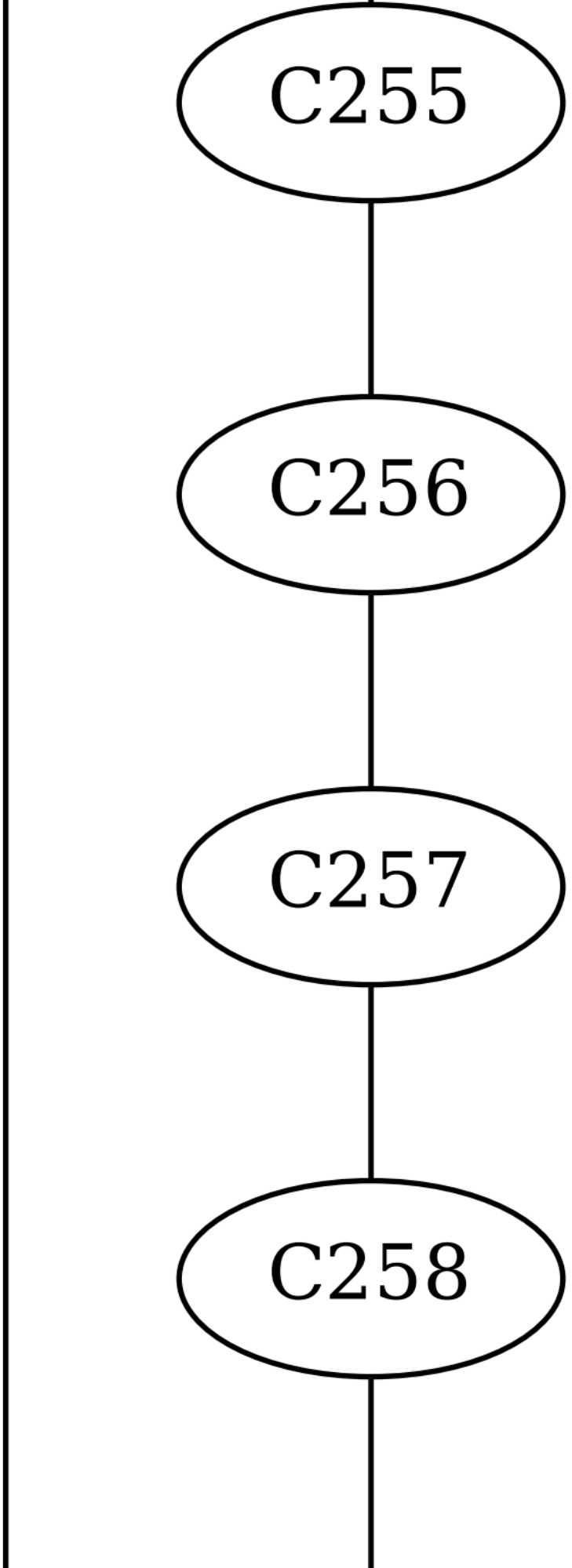
C255
C256
C257
C258

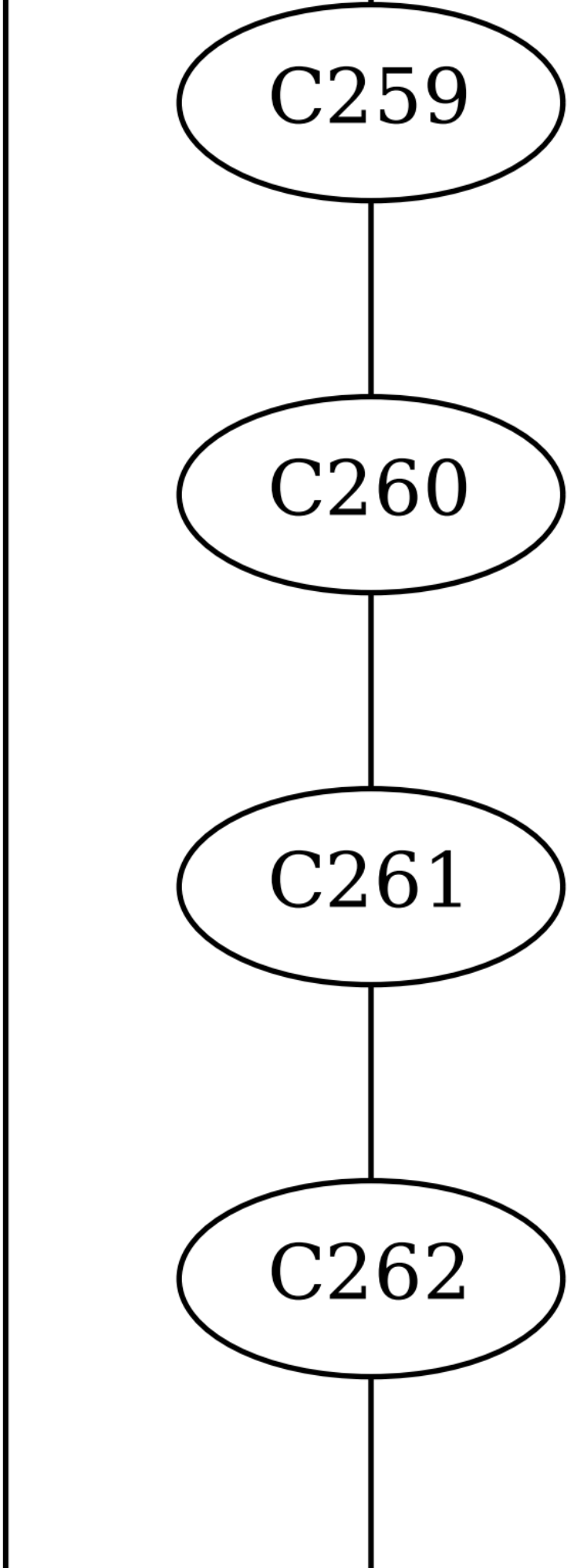
C259
C260
C261
C262

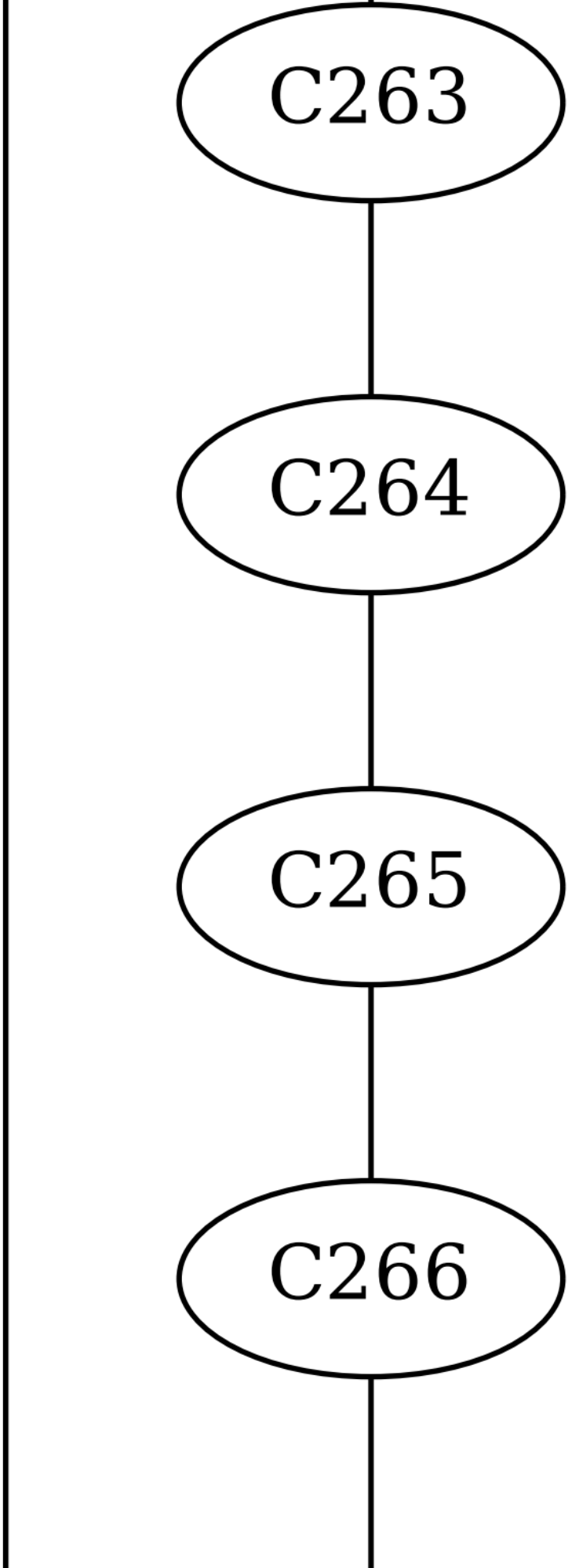
C263
C264
C265
C266

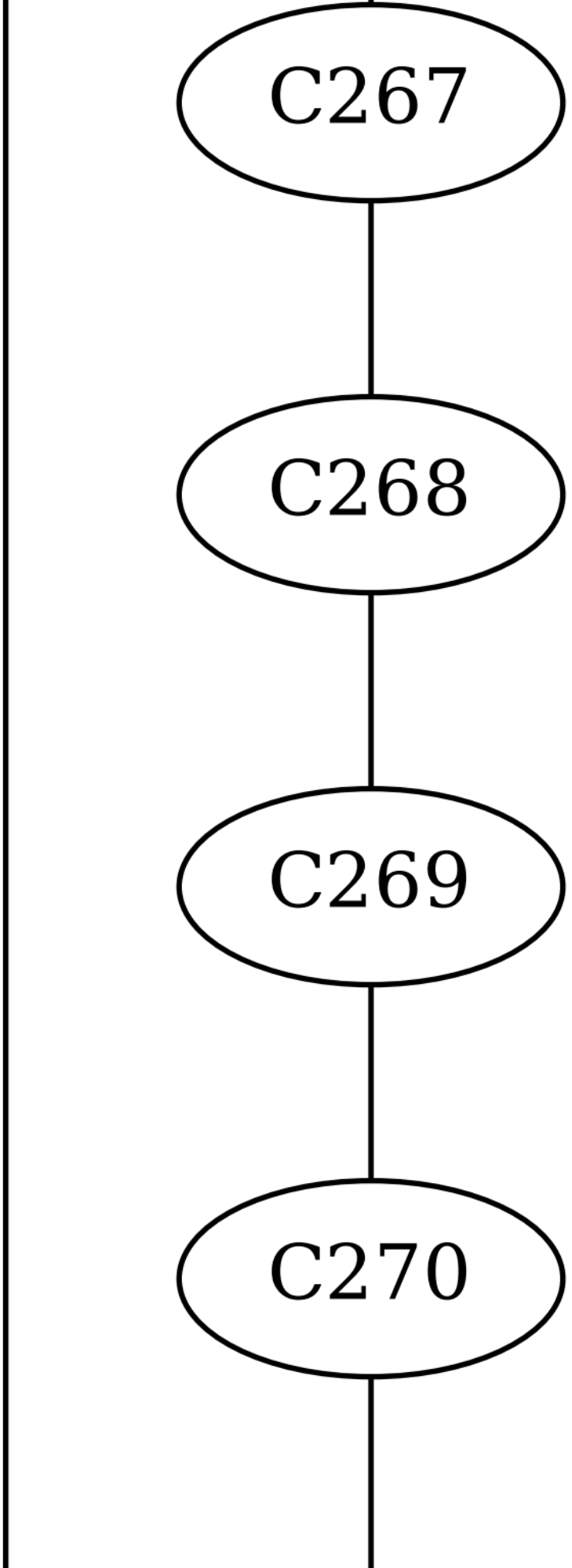
C267
C268
C269
C270

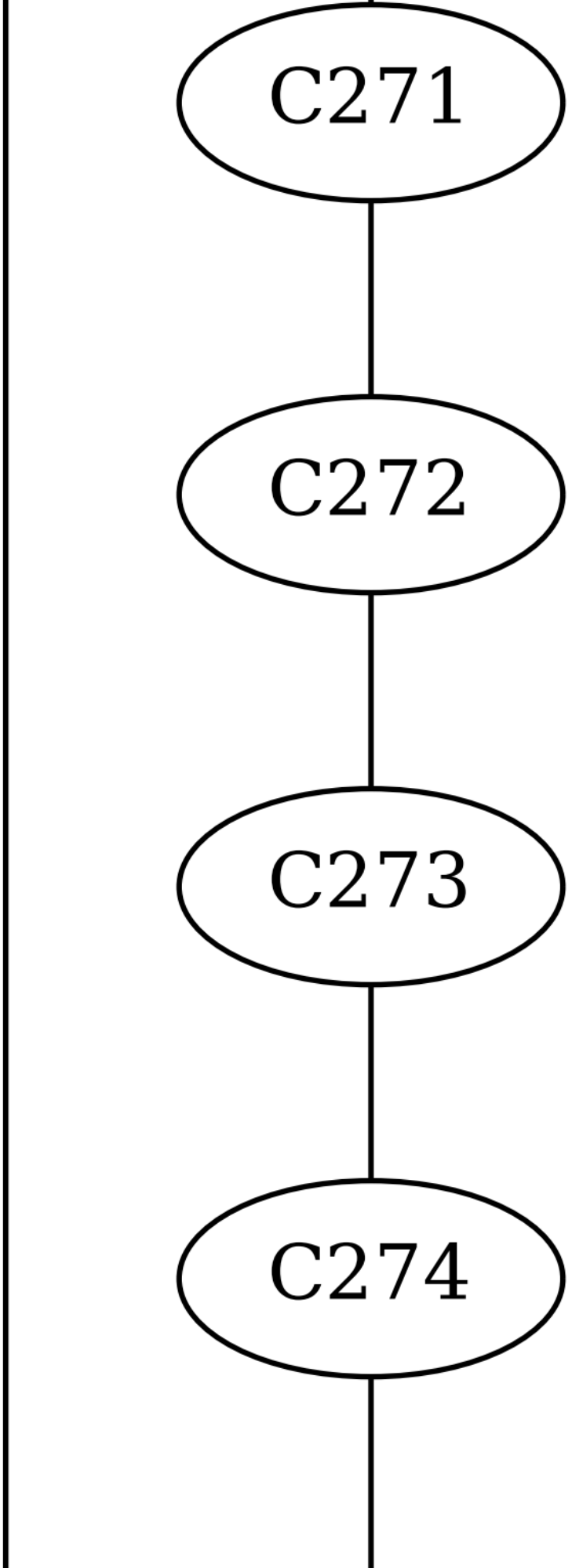
C271
C272
C273
C274

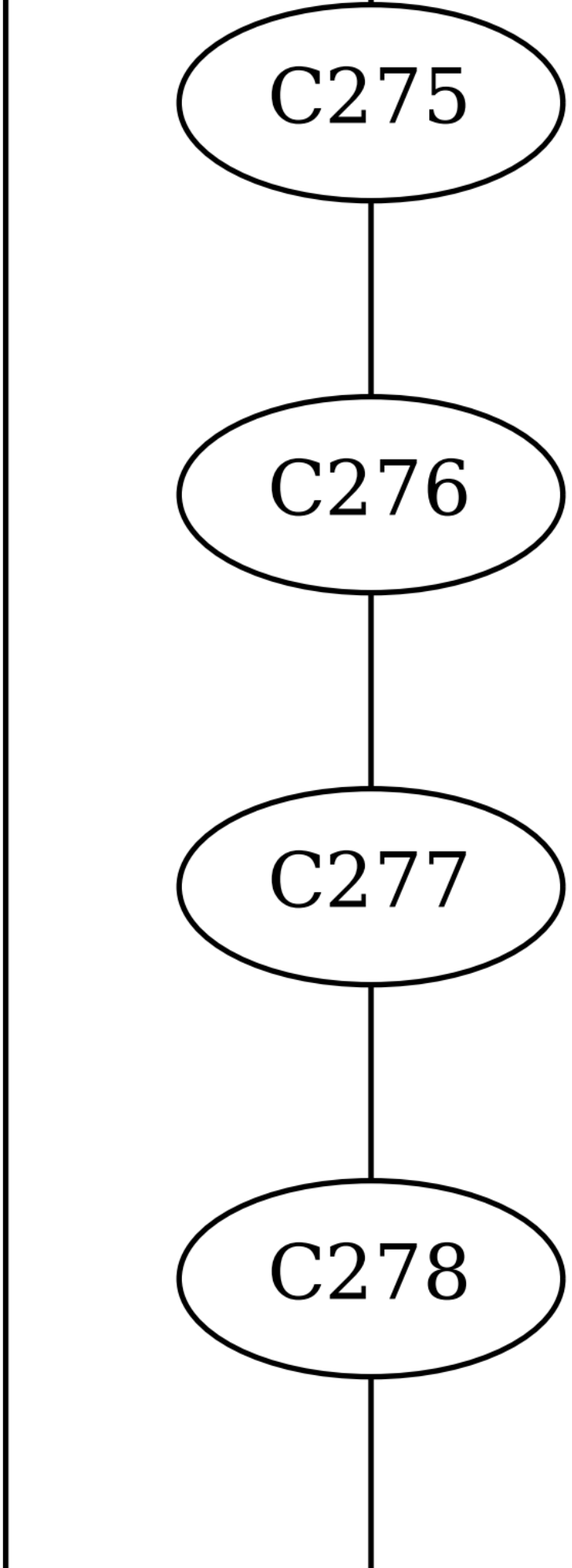
C275
C276
C277
C278

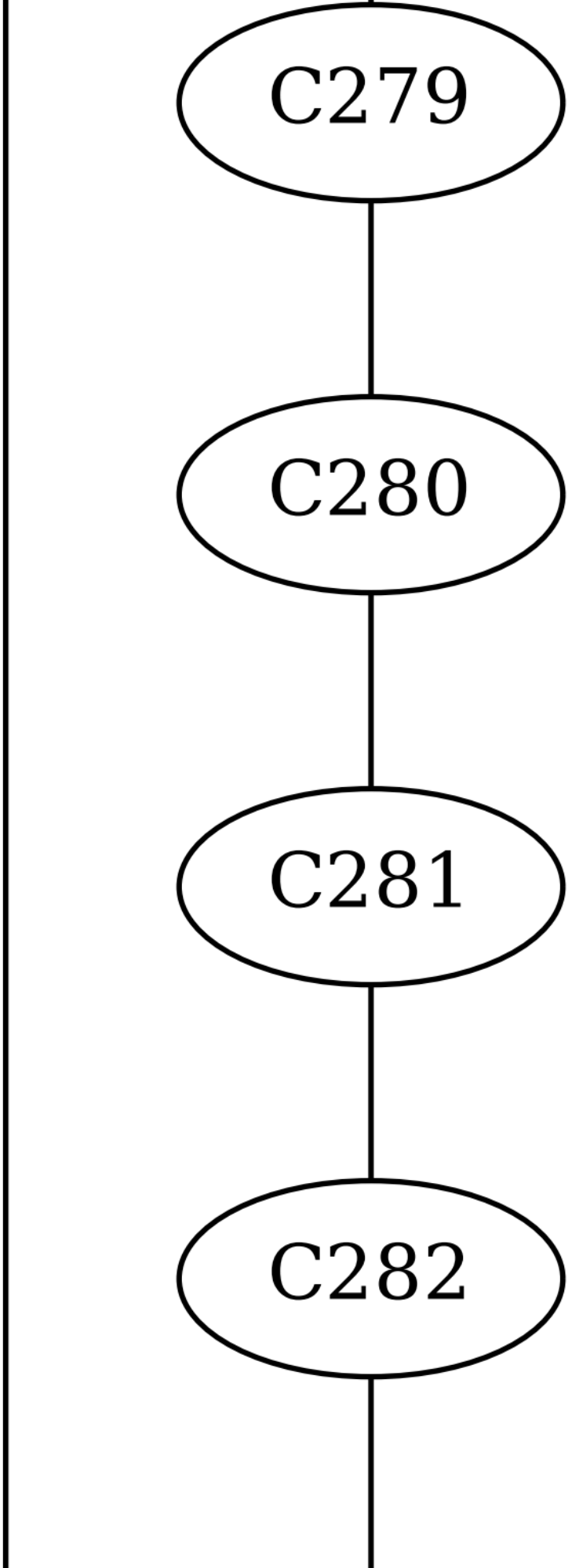
C279
C280
C281
C282

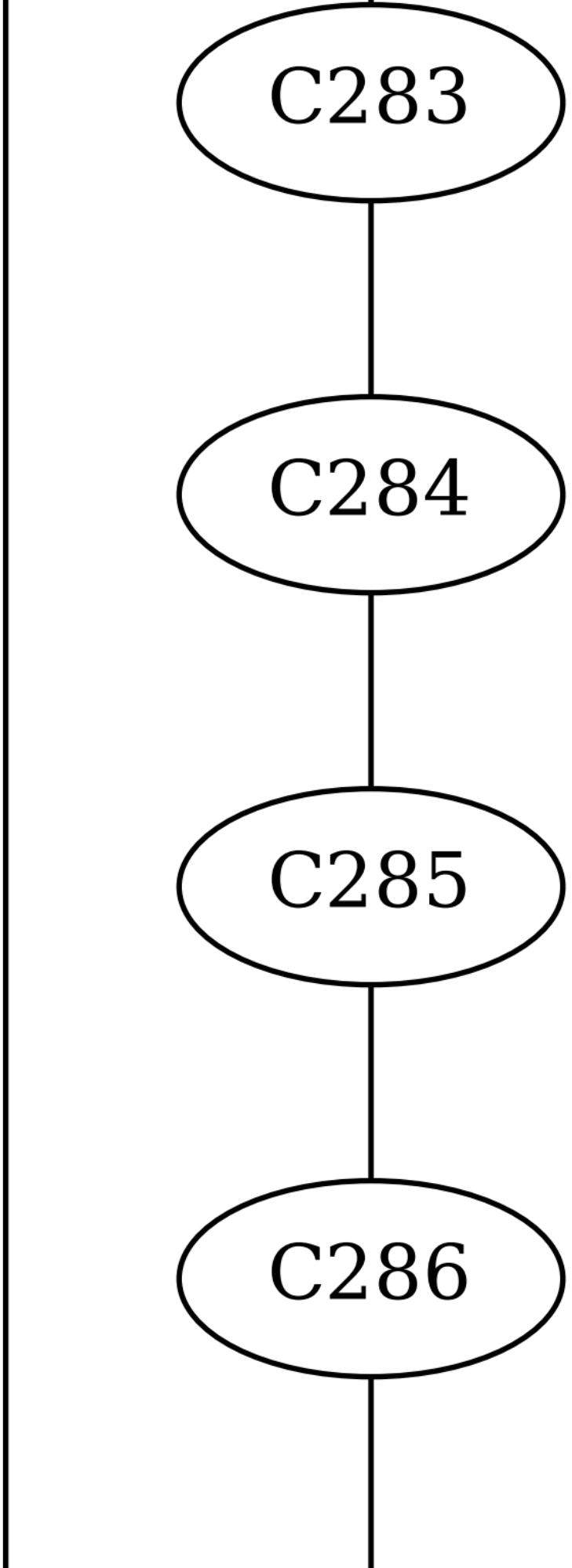
C283
C284
C285
C286

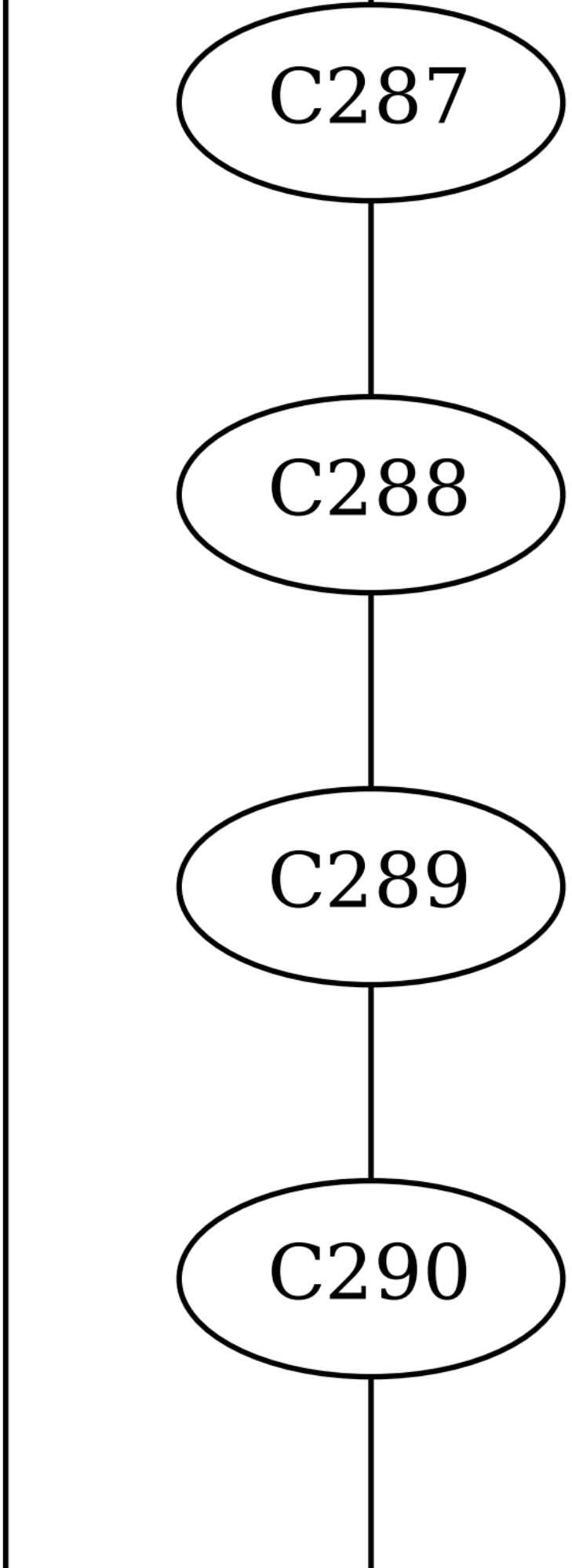
C287
C288
C289
C290

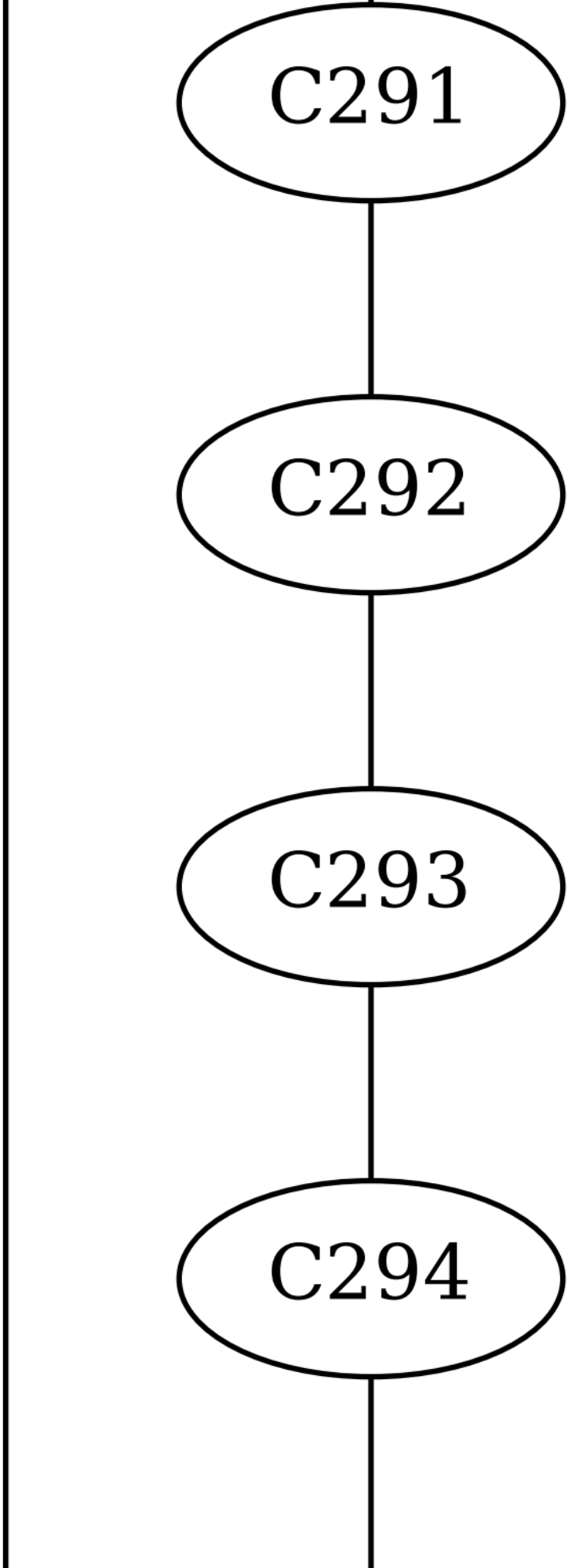
C291
C292
C293
C294

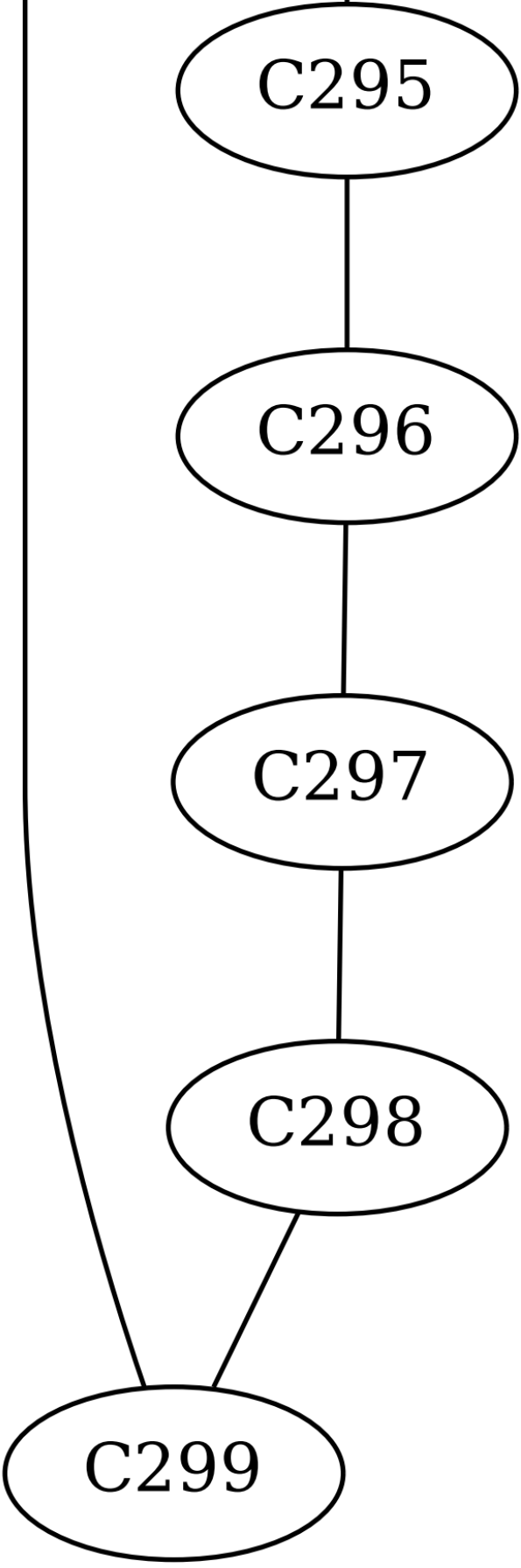
C295
C296
C297
C298
C299