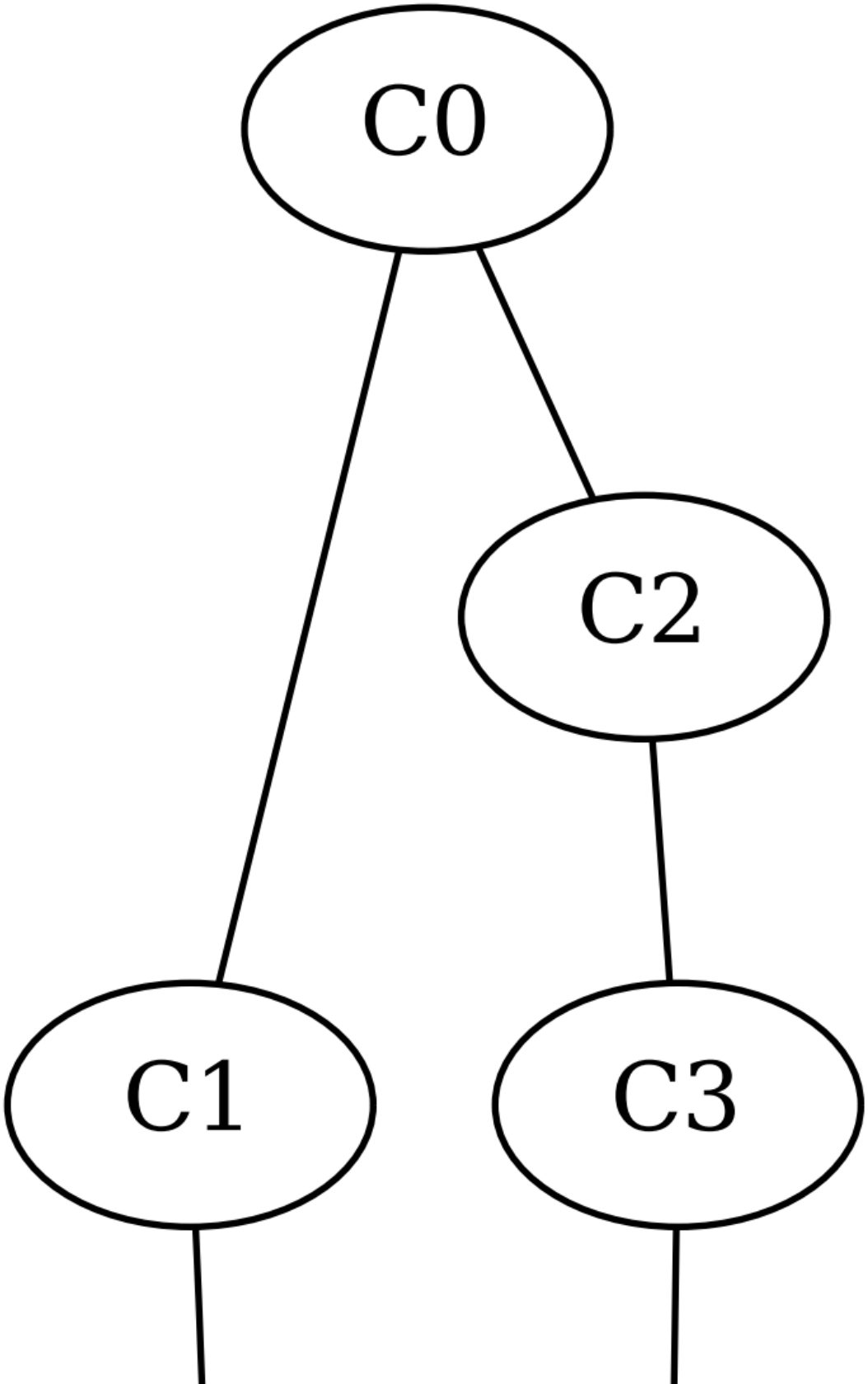
C0
C2
C1
C3

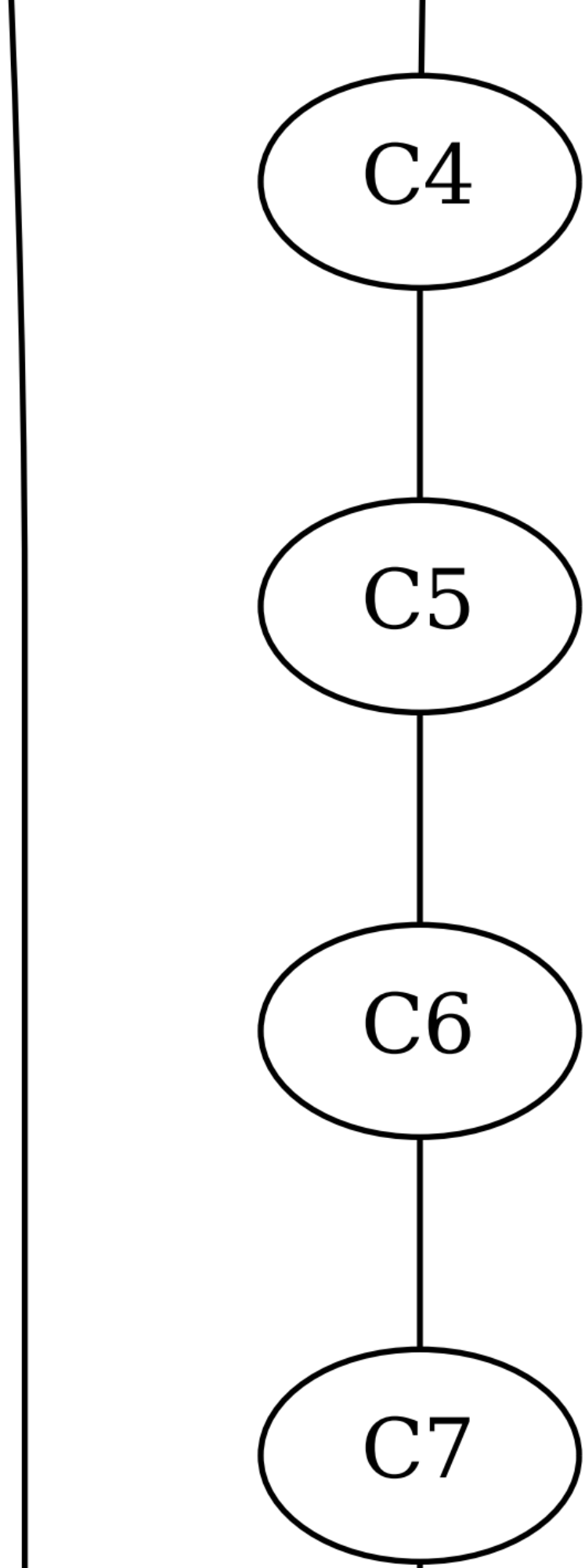
C4
C5
C6
C7

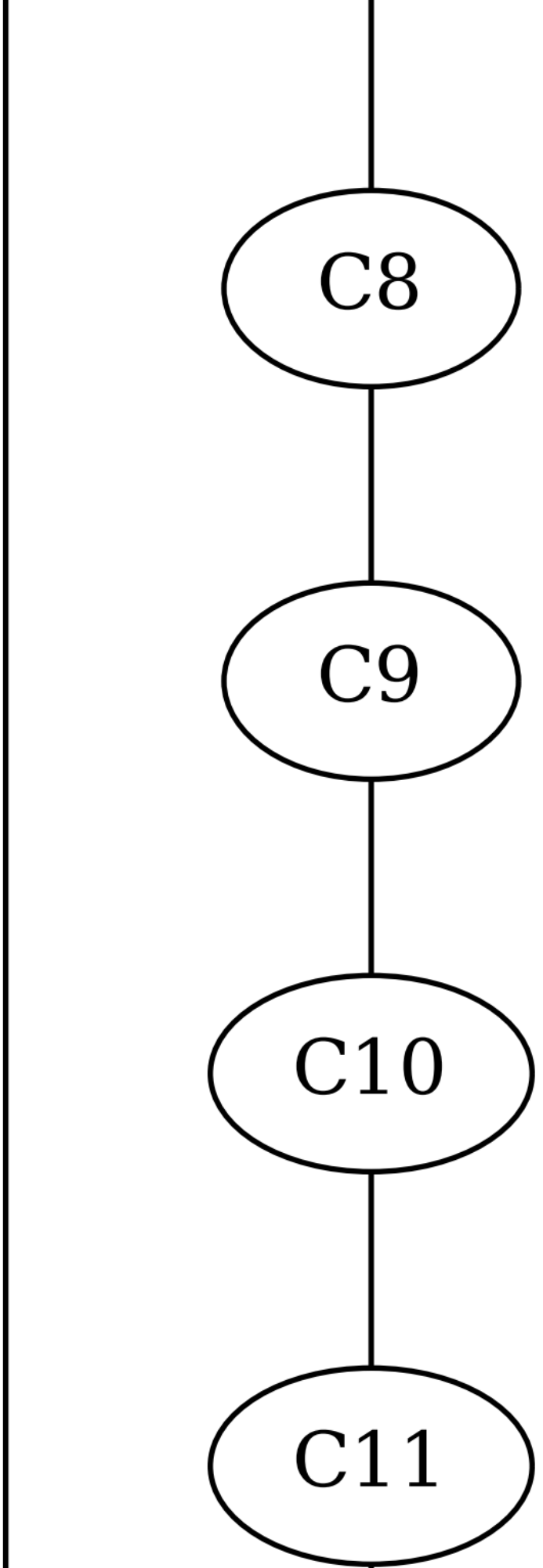
C8
C9
C10
C11

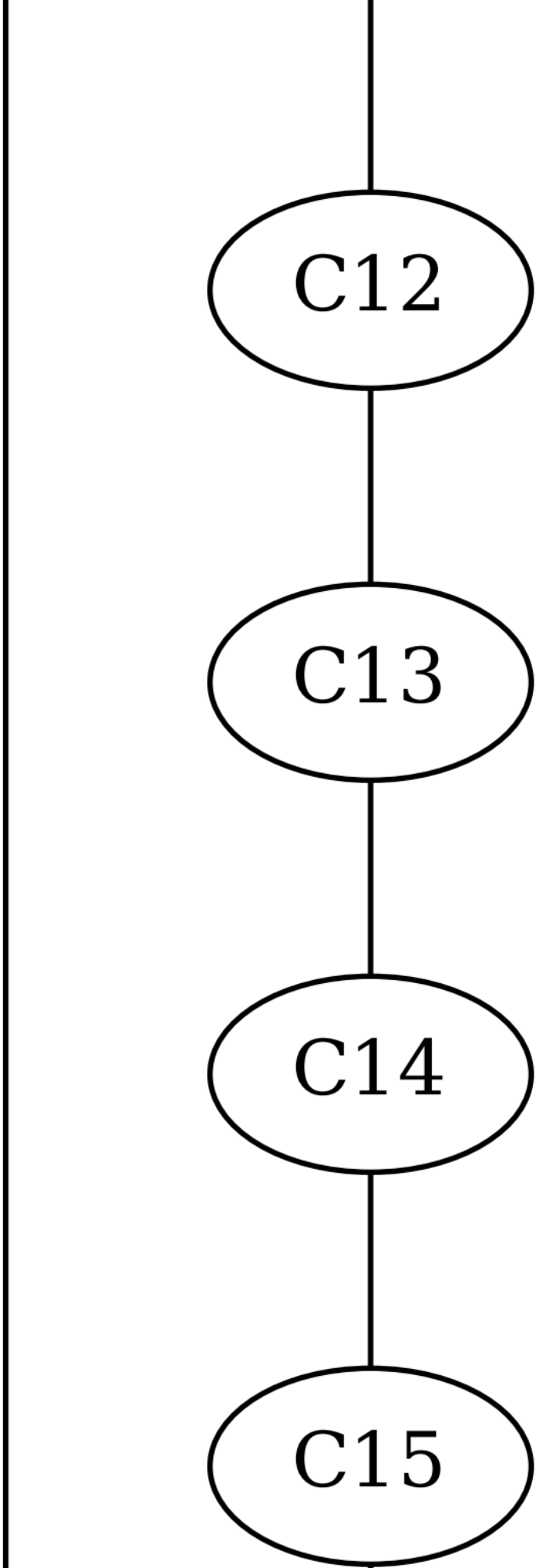
C12
C13
C14
C15

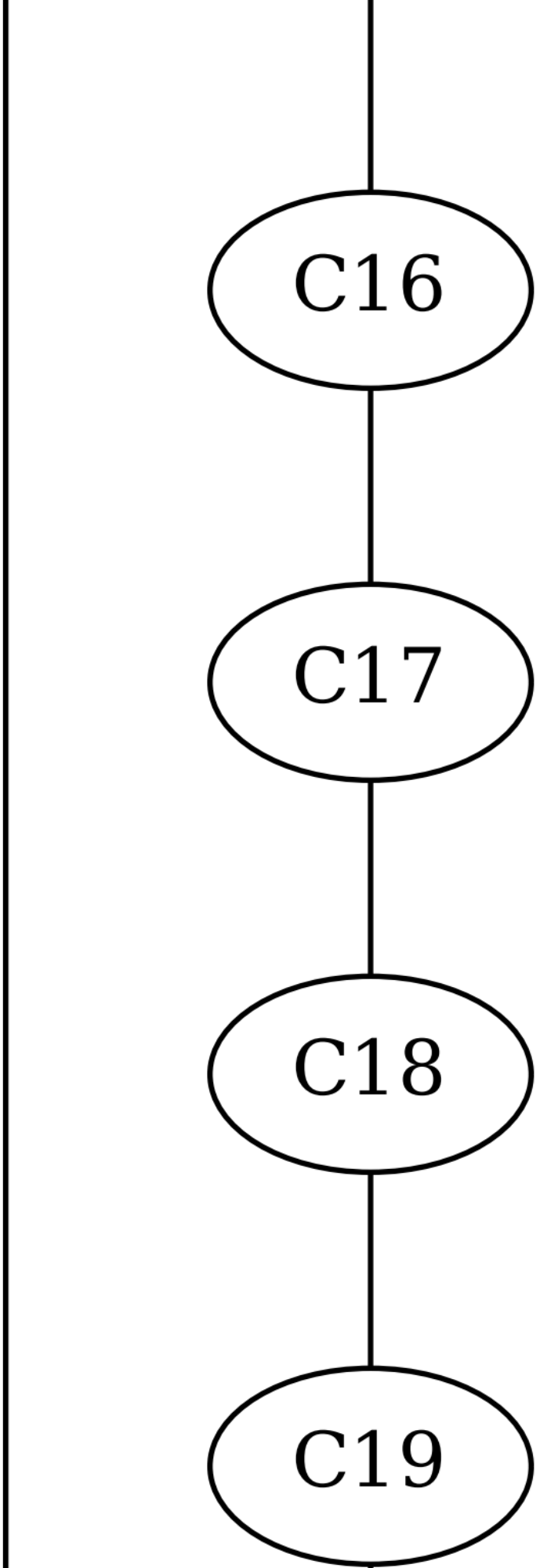
C16
C17
C18
C19

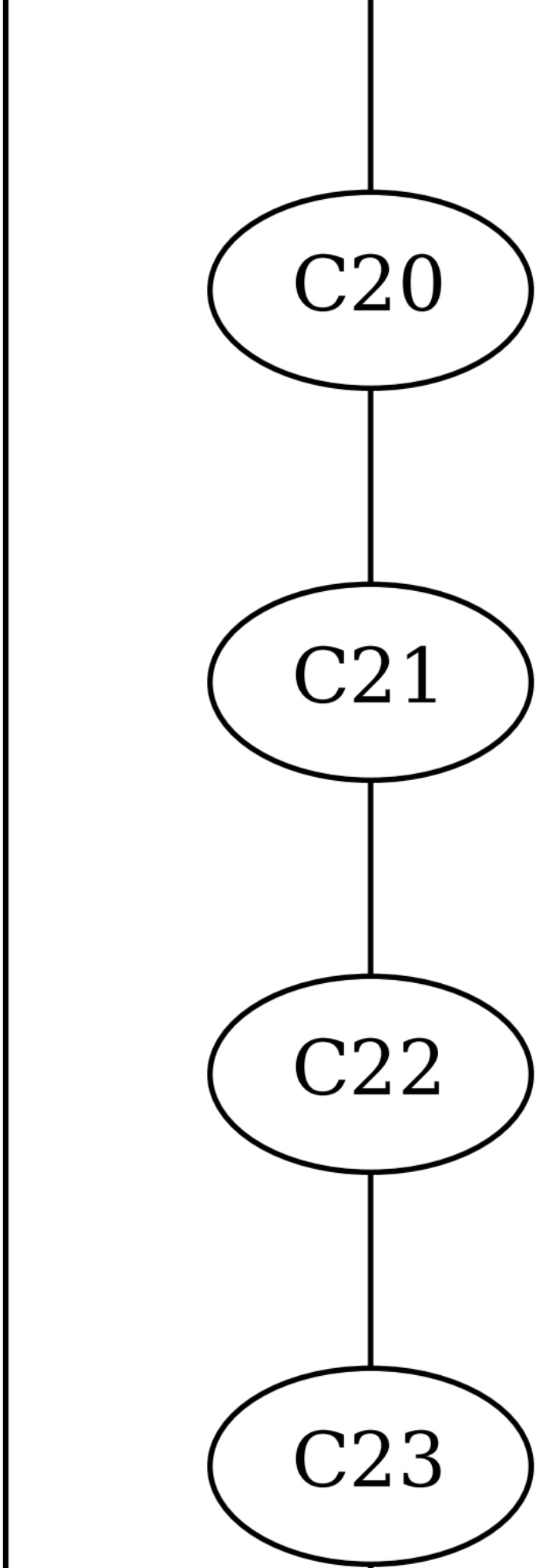
C20
C21
C22
C23

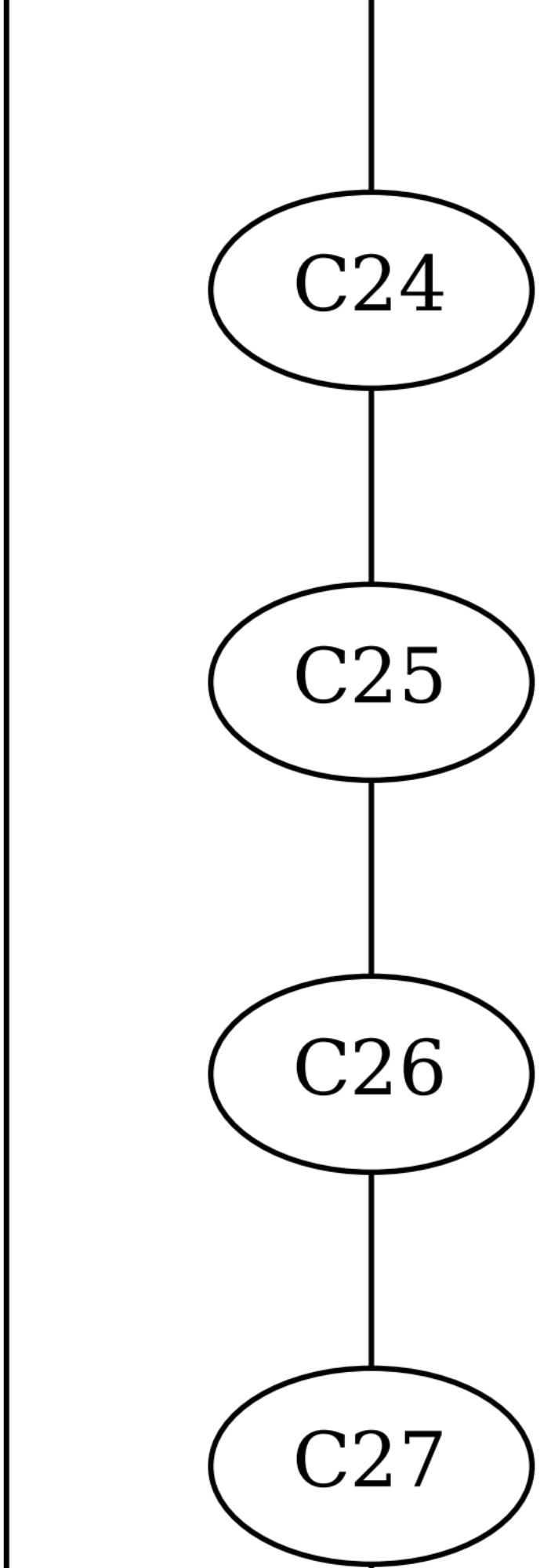
C24
C25
C26
C27

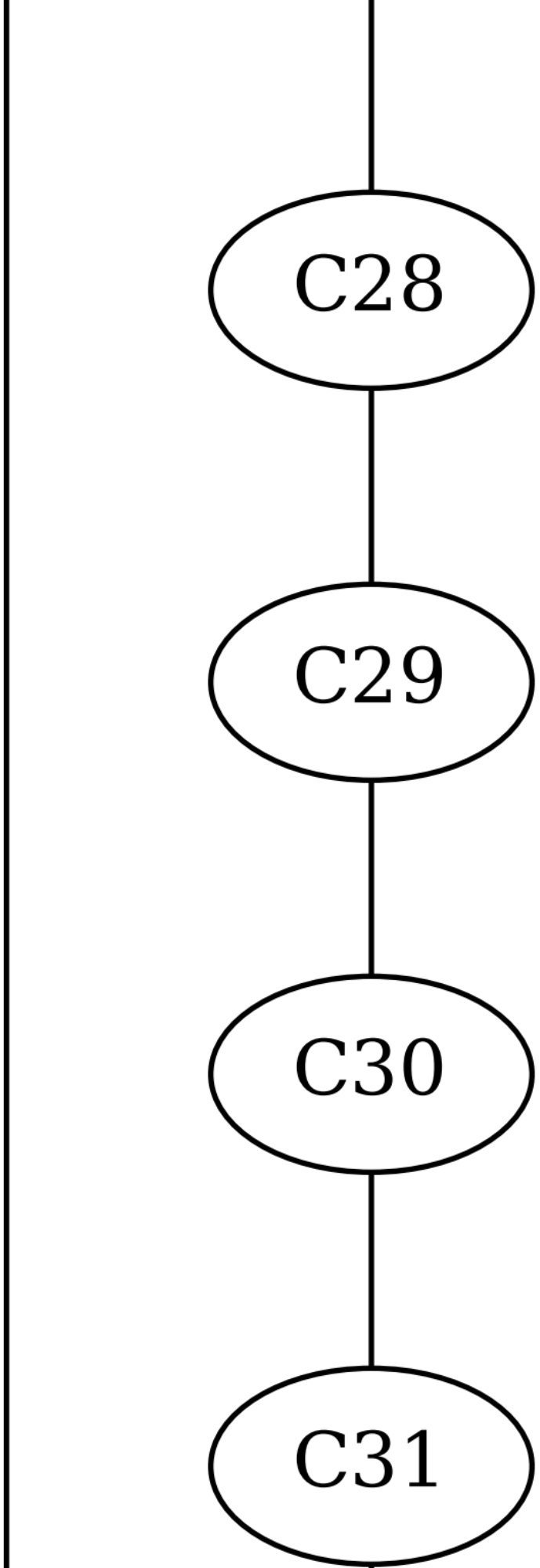
C28
C29
C30
C31

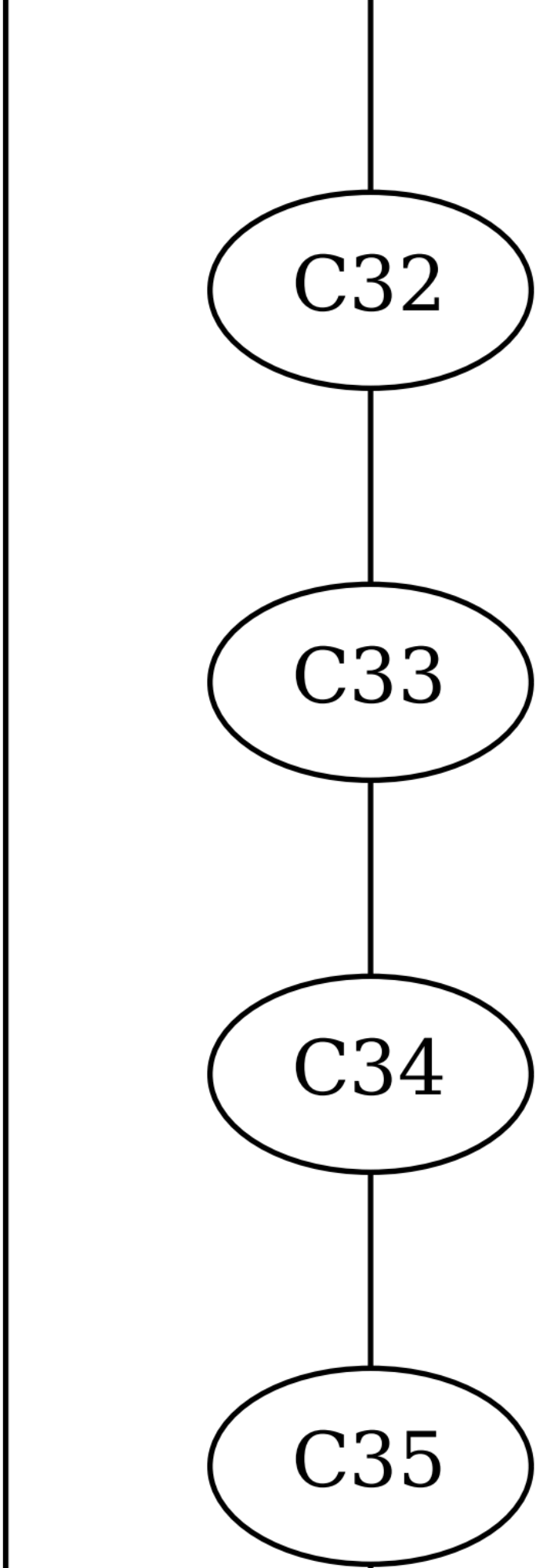
C32
C33
C34
C35

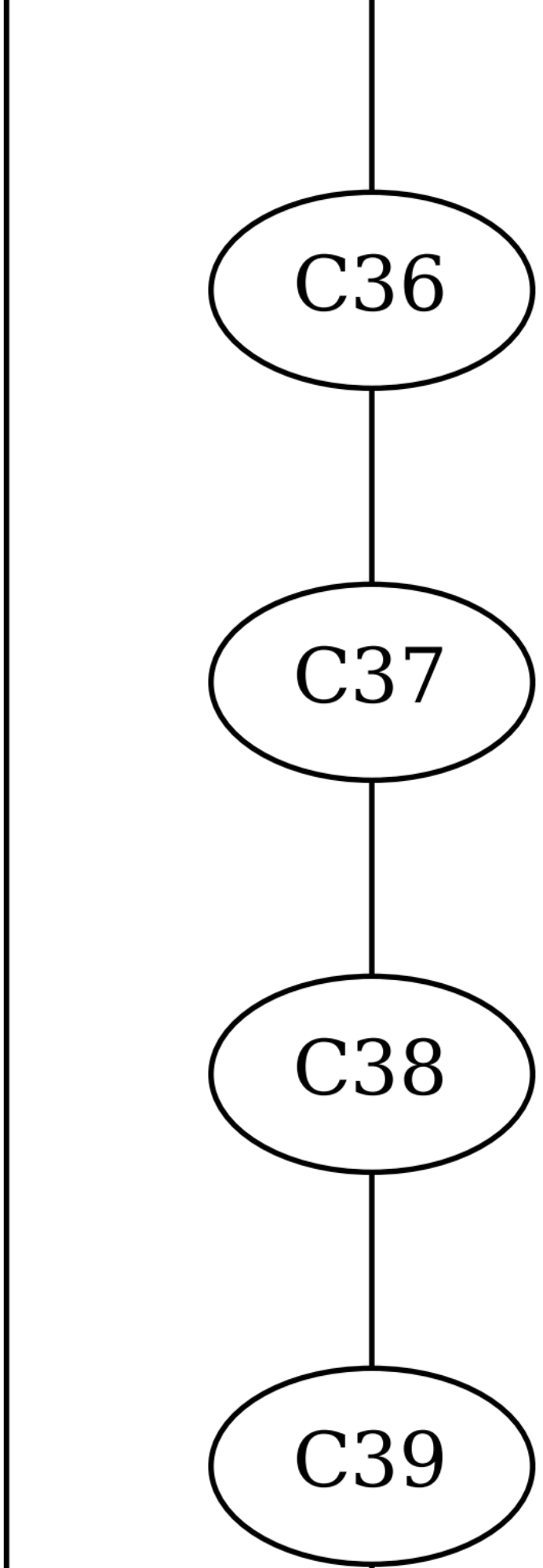
C36
C37
C38
C39

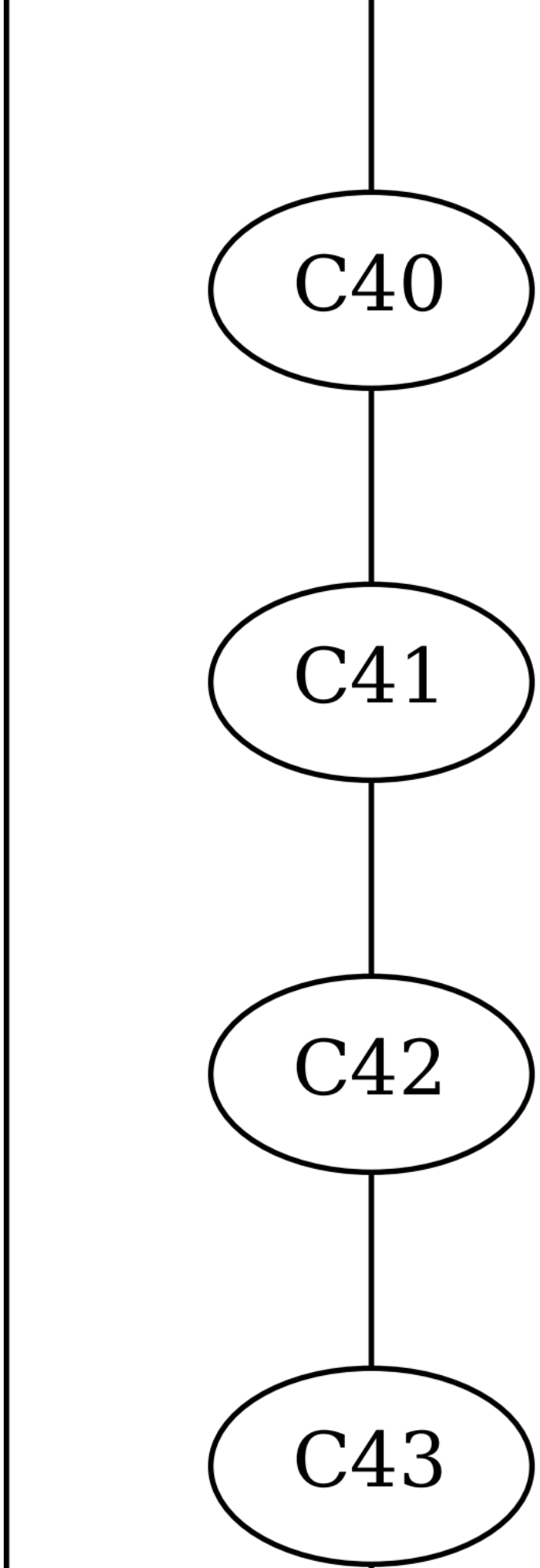
C40
C41
C42
C43

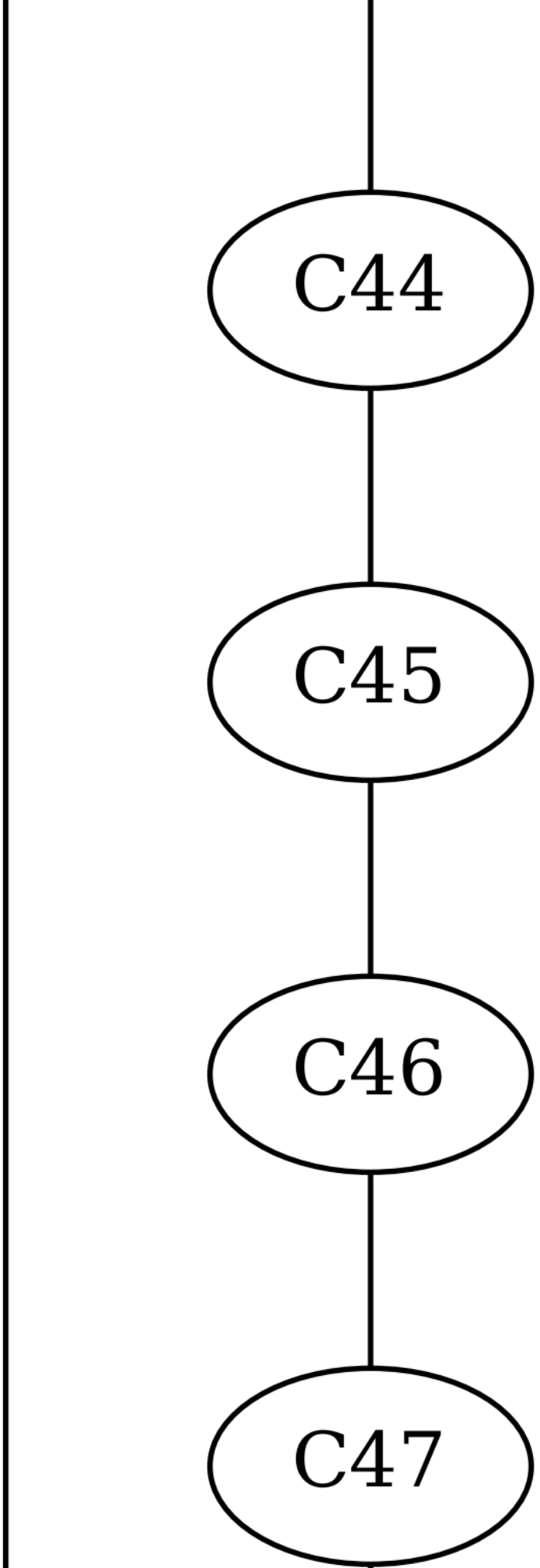
C44
C45
C46
C47

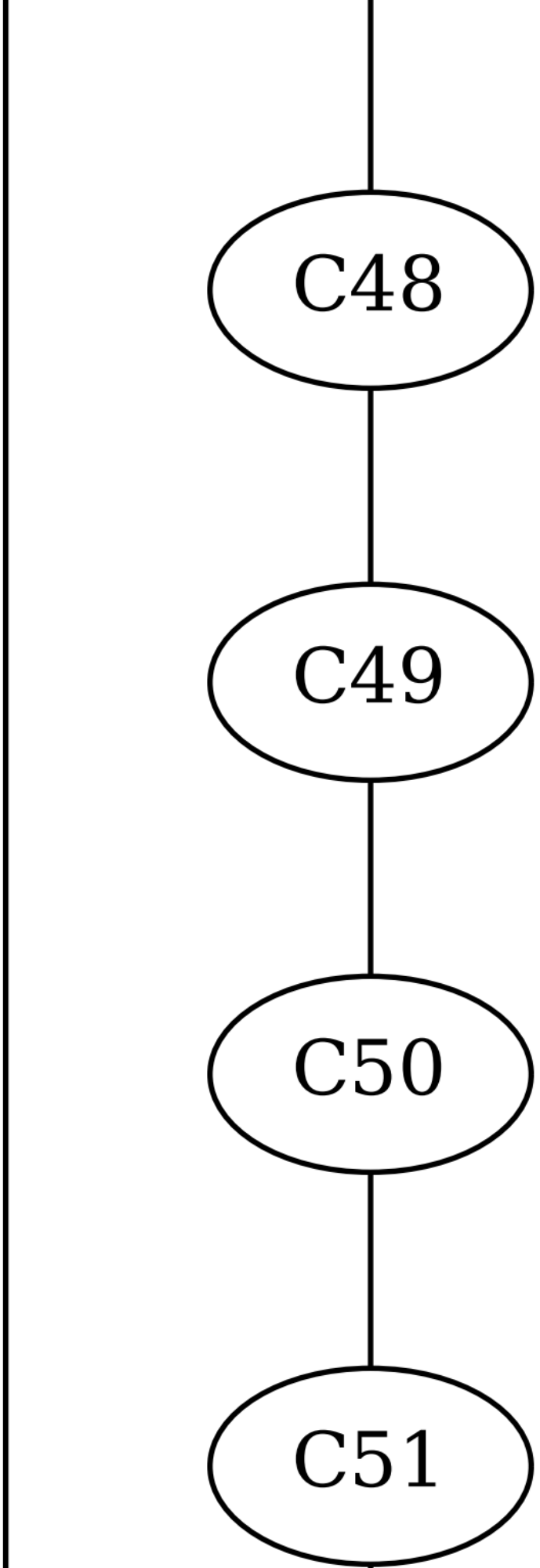
C48
C49
C50
C51

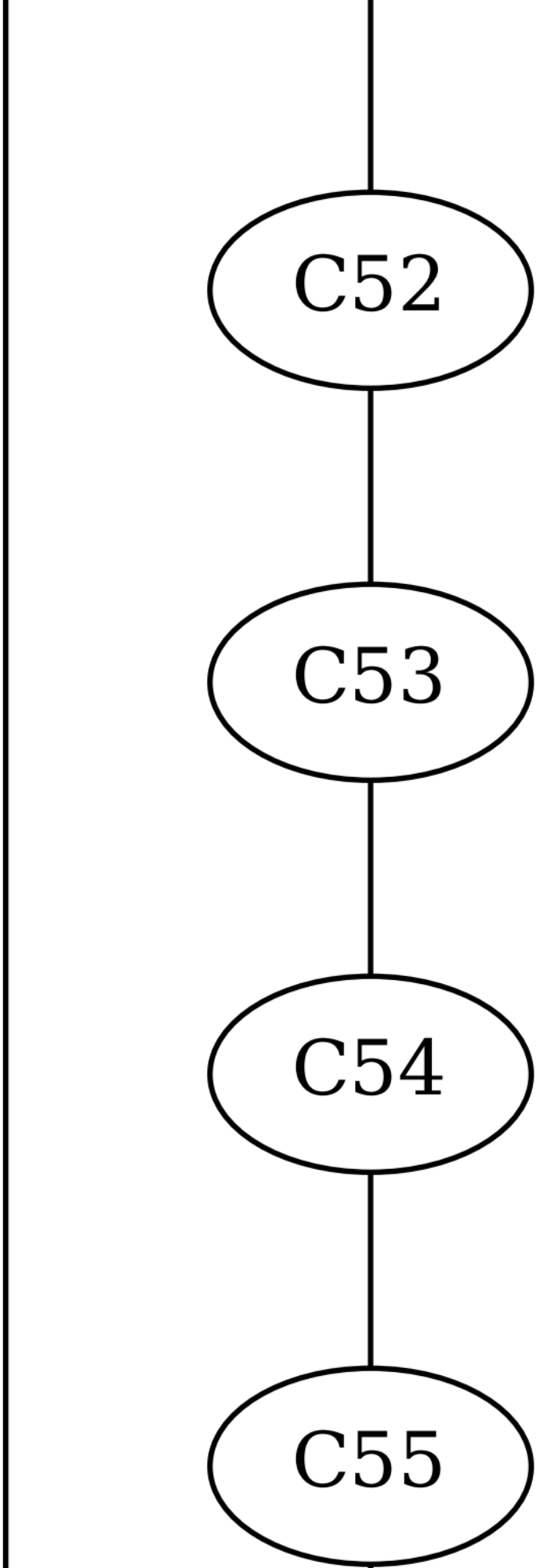
C52
C53
C54
C55

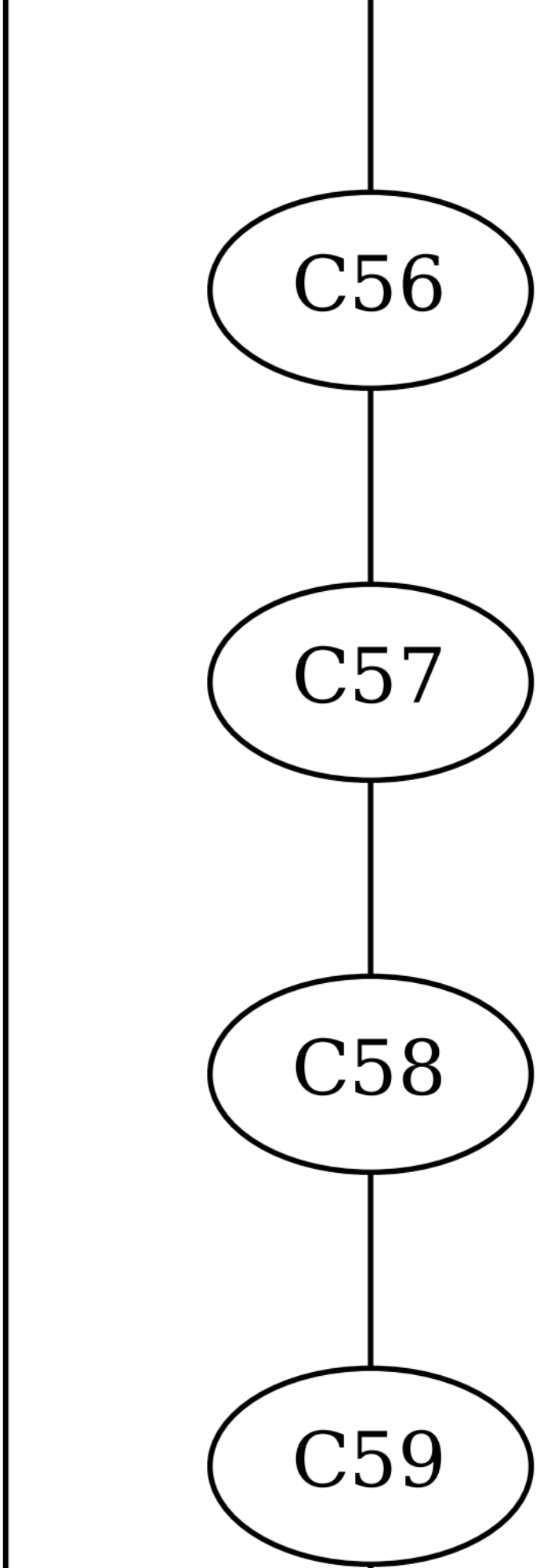
C56
C57
C58
C59

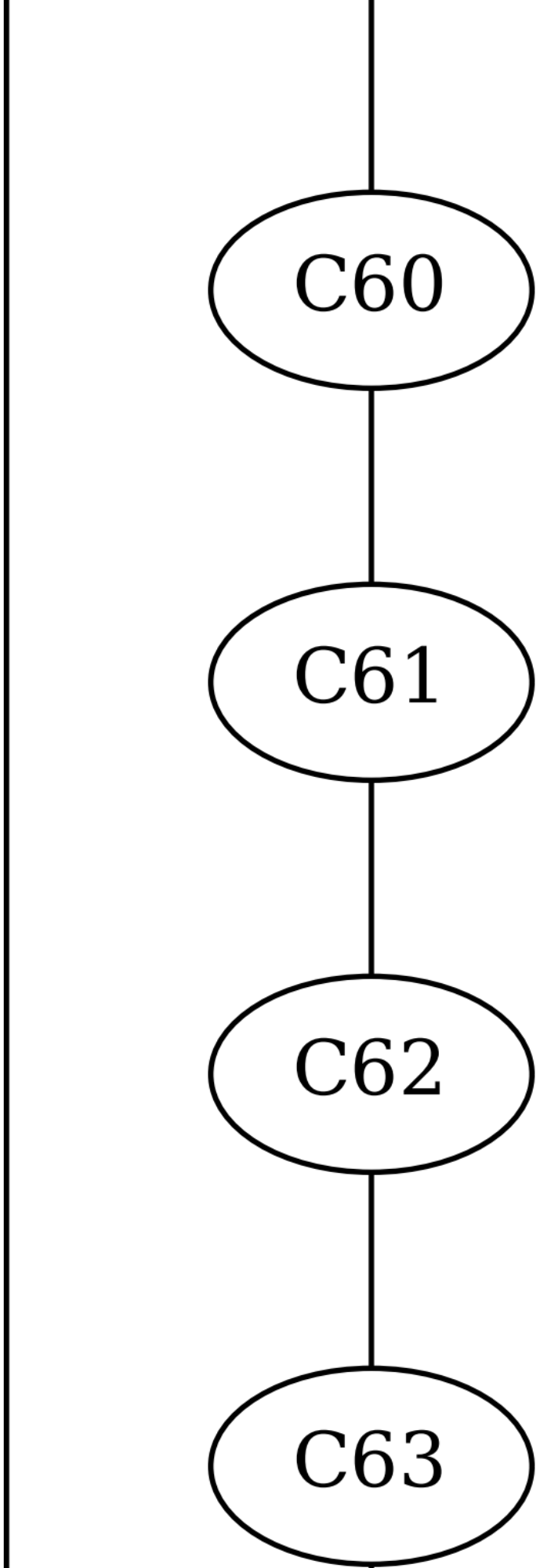
C60
C61
C62
C63

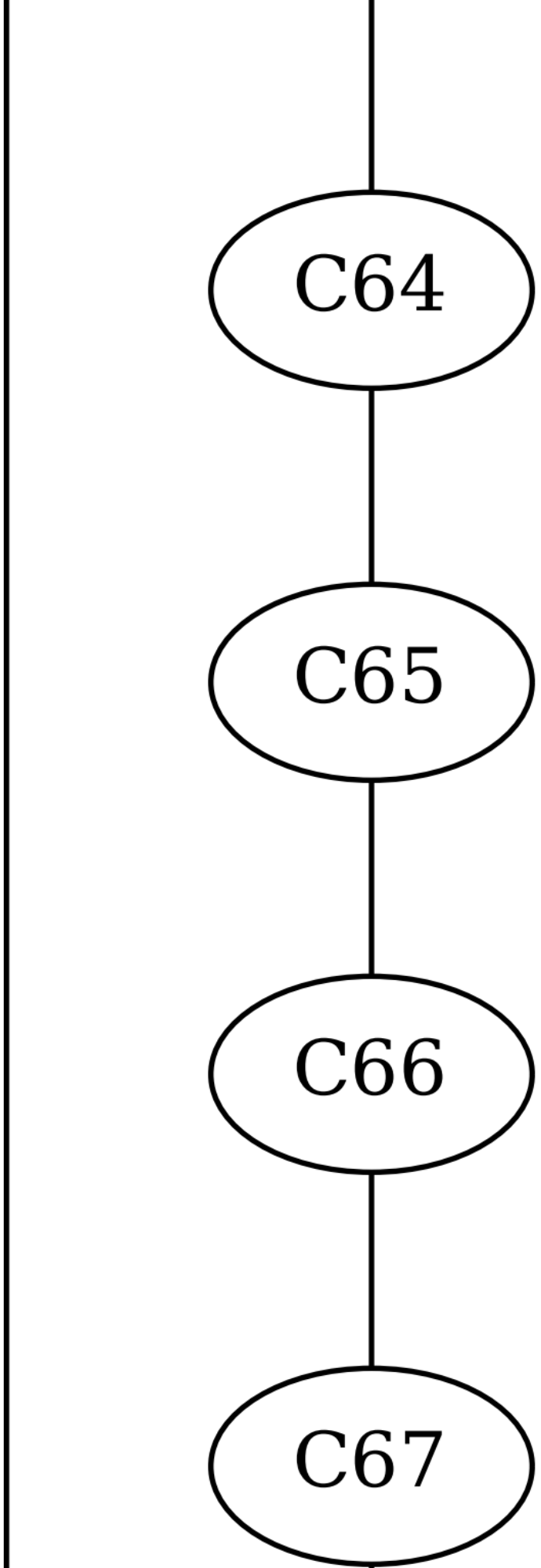
C64
C65
C66
C67

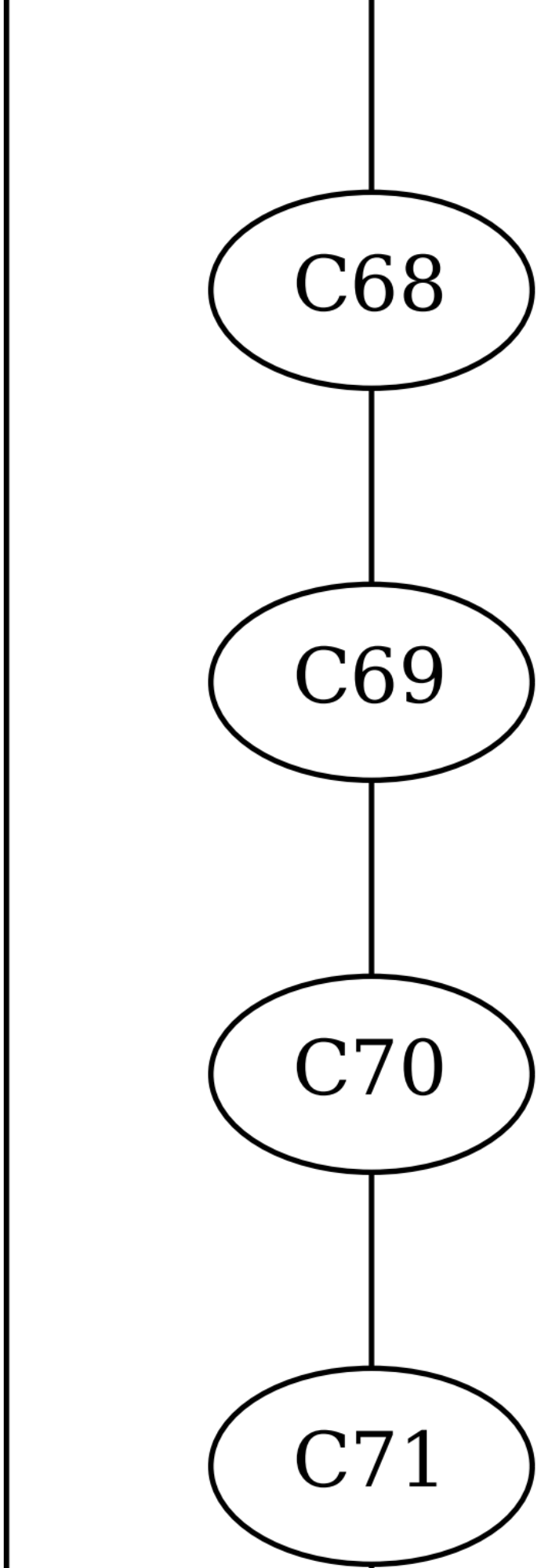
C68
C69
C70
C71

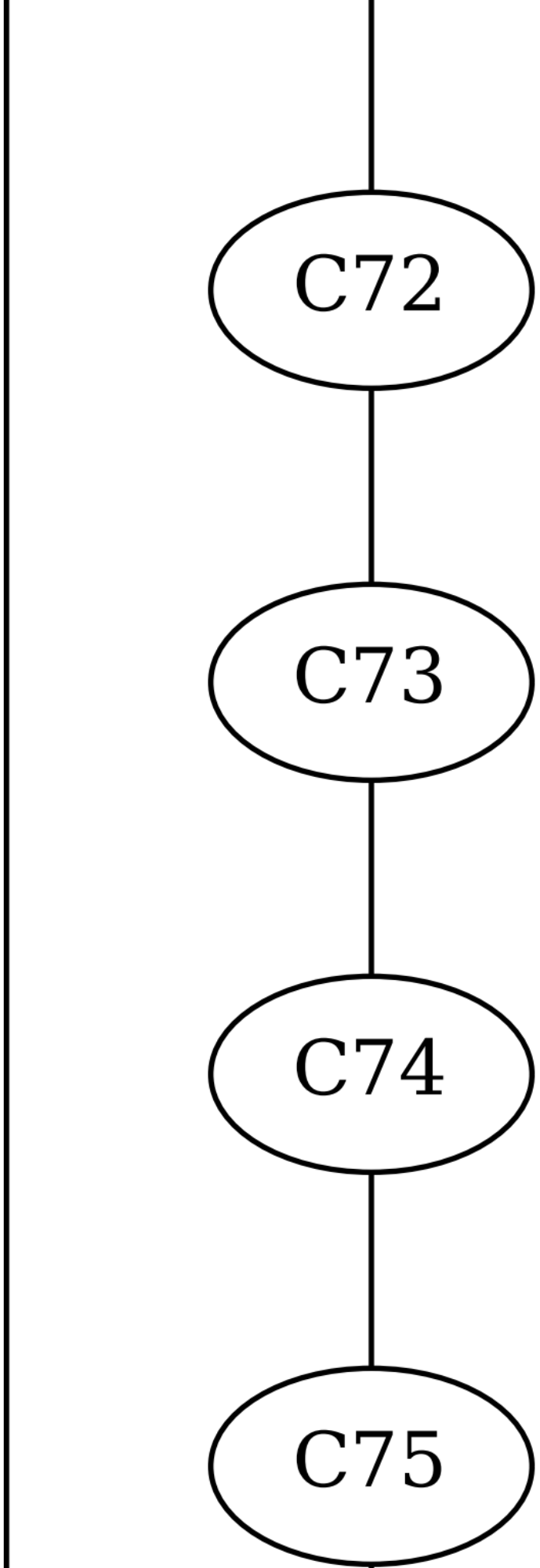
C72
C73
C74
C75

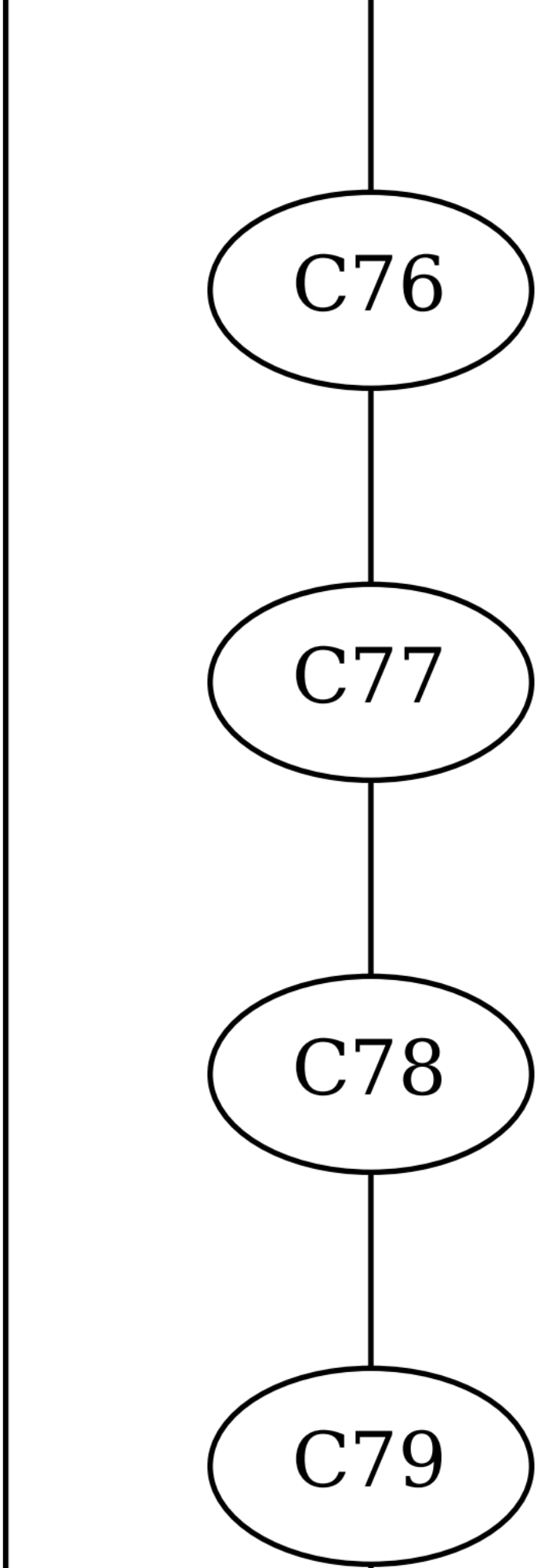
C76
C77
C78
C79

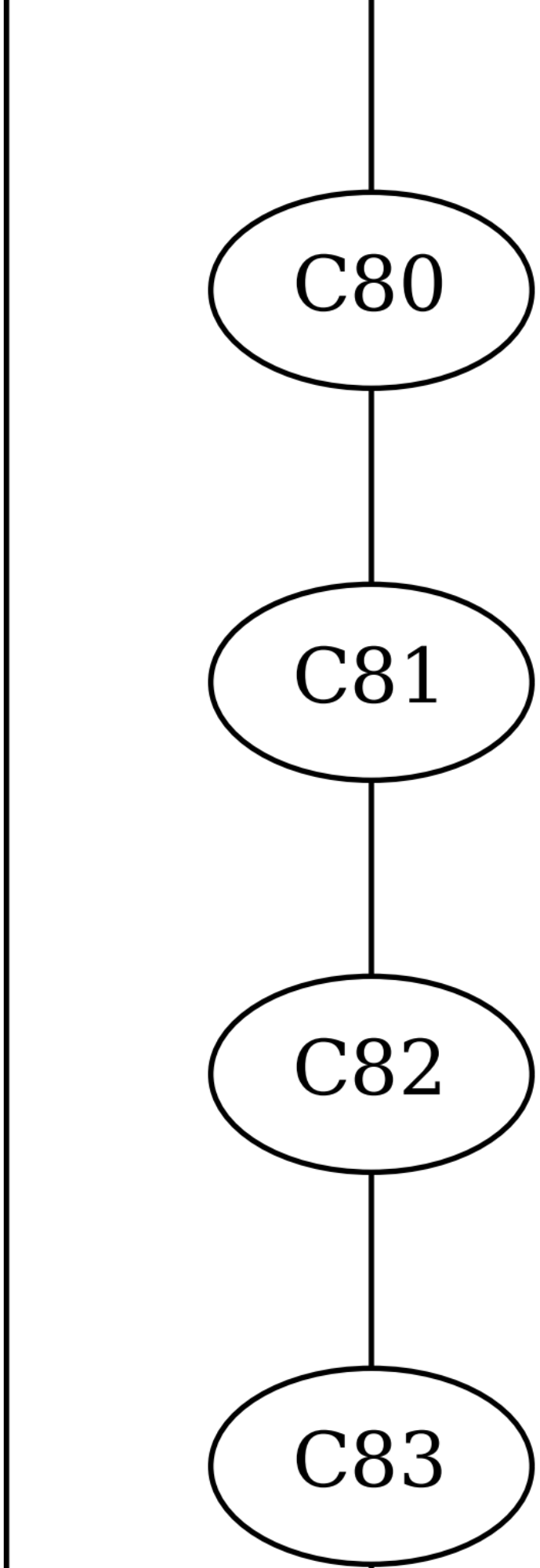
C80
C81
C82
C83

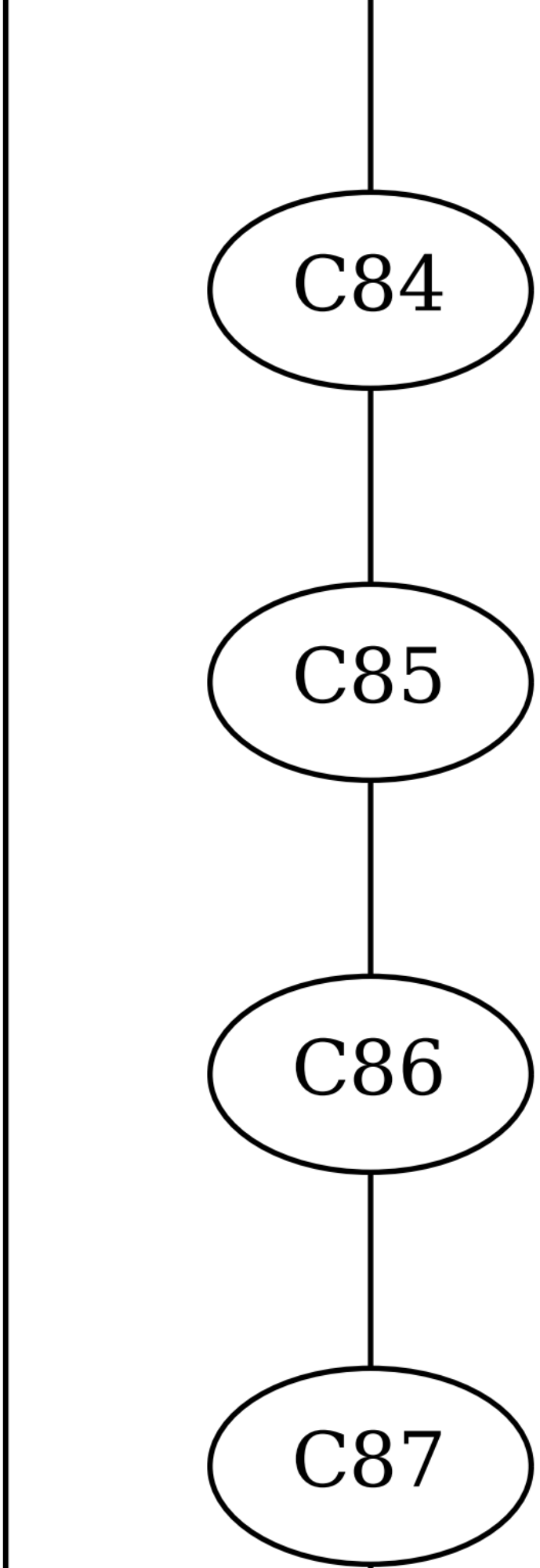
C84
C85
C86
C87

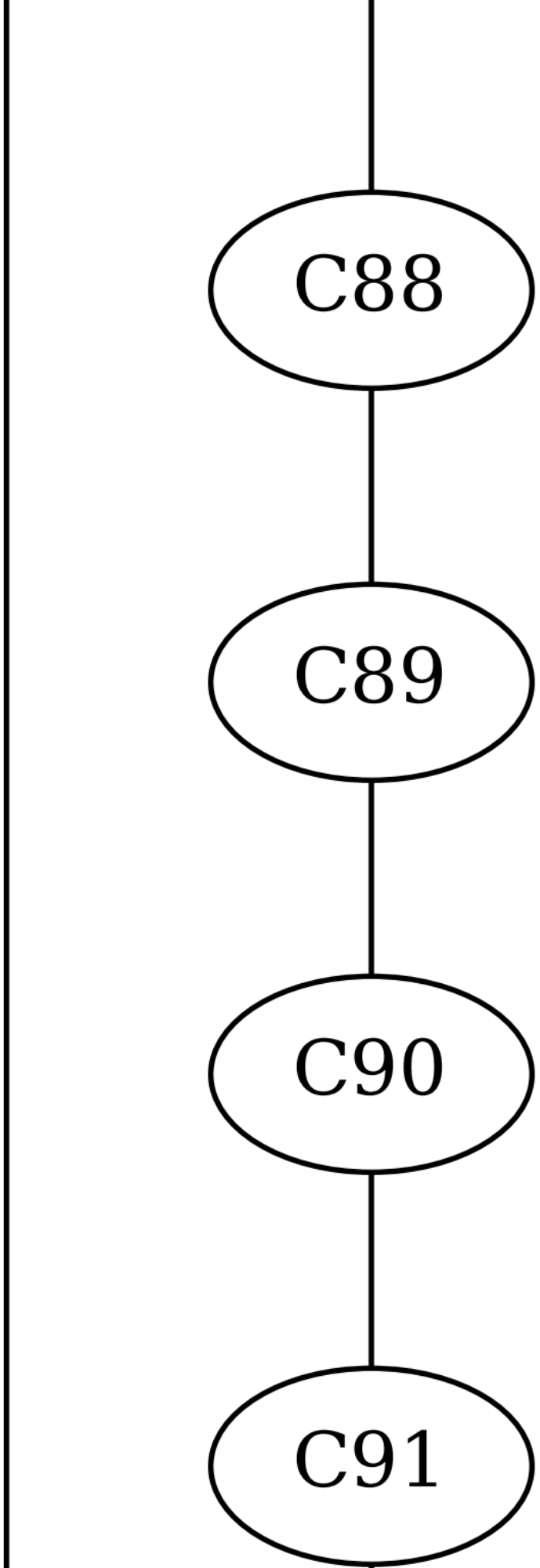
C88
C89
C90
C91

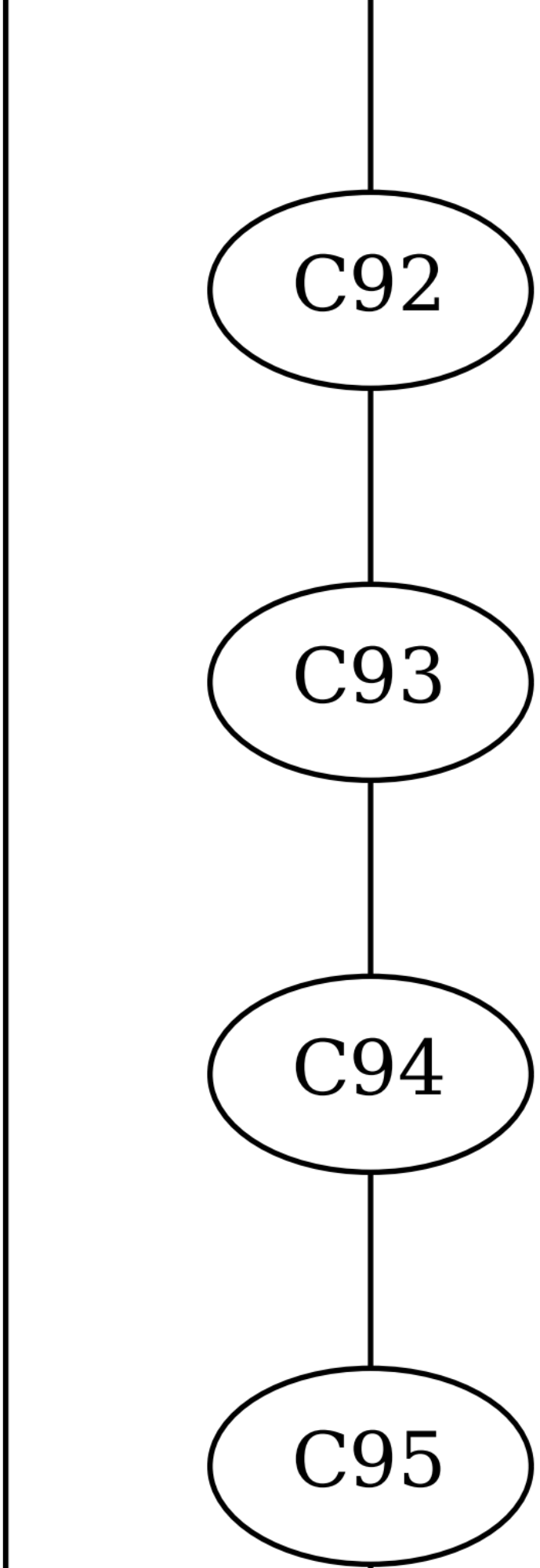
C92
C93
C94
C95

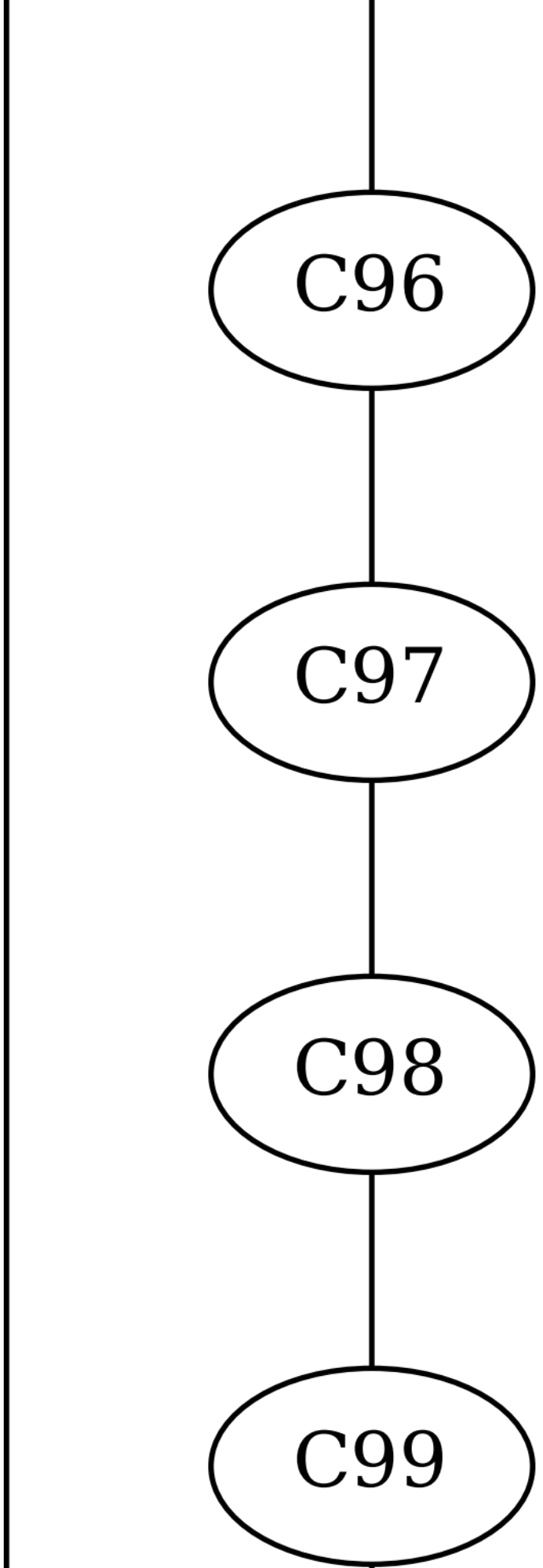
C96
C97
C98
C99

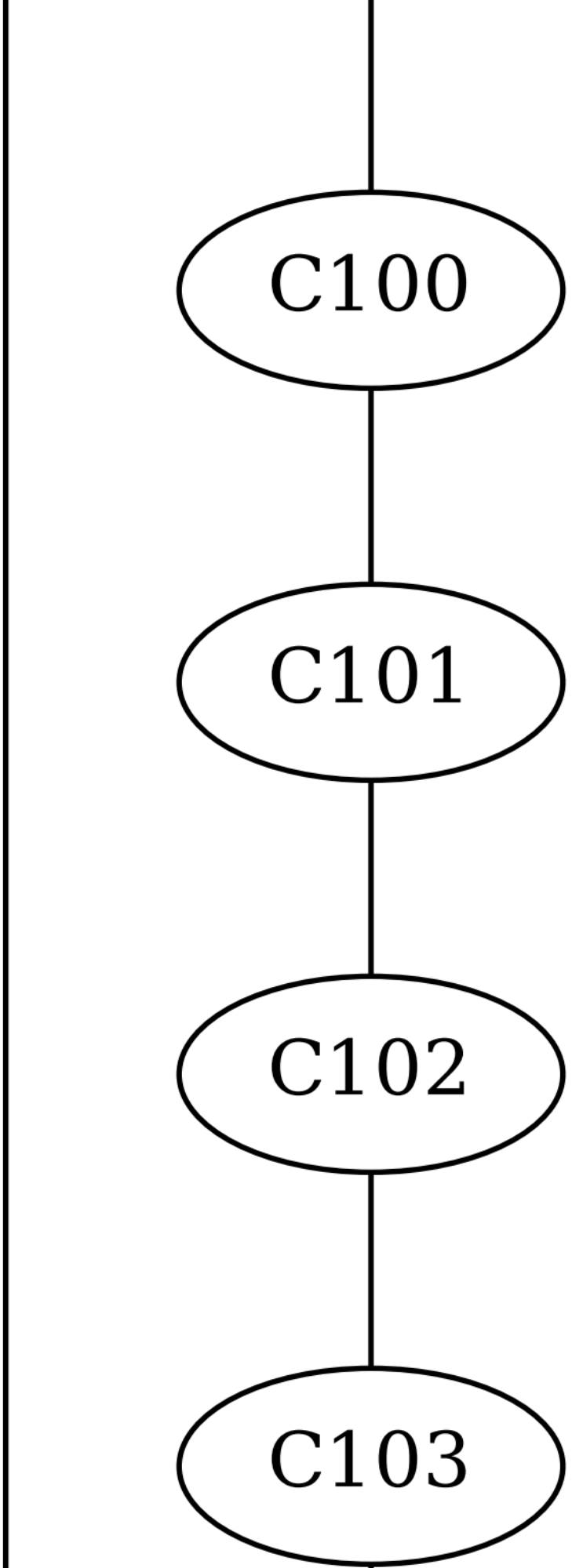
C100
C101
C102
C103

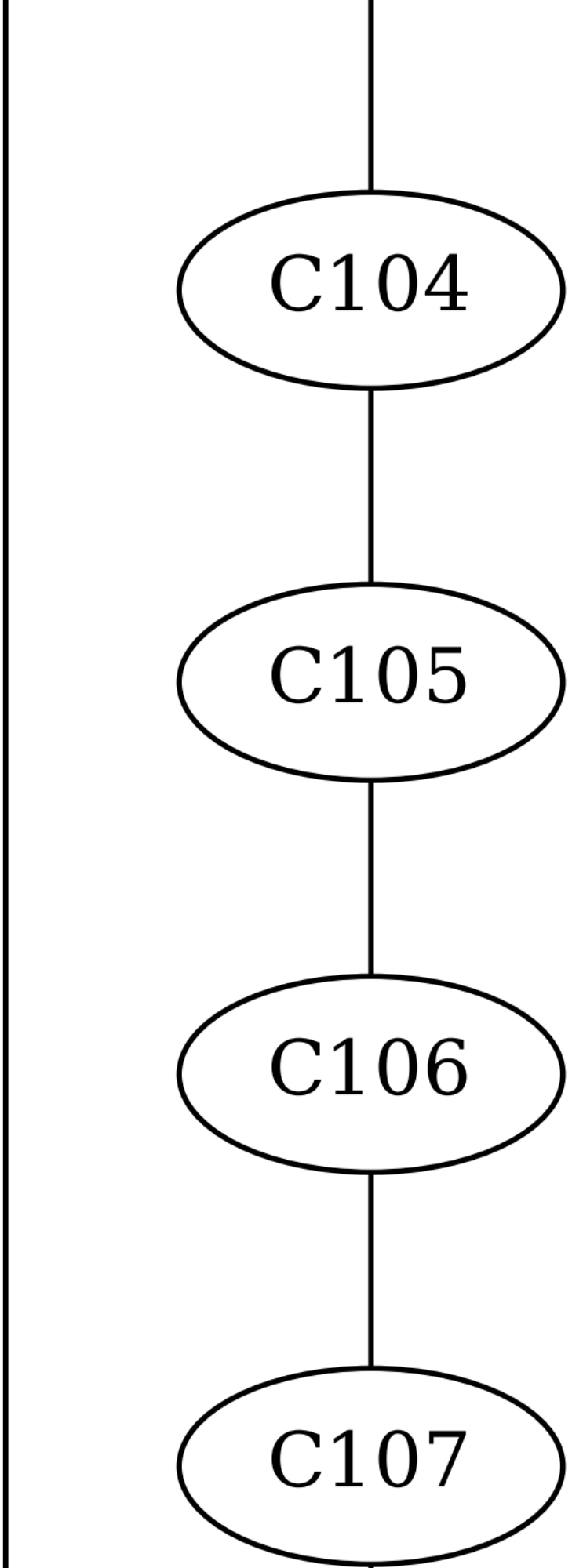
C104
C105
C106
C107

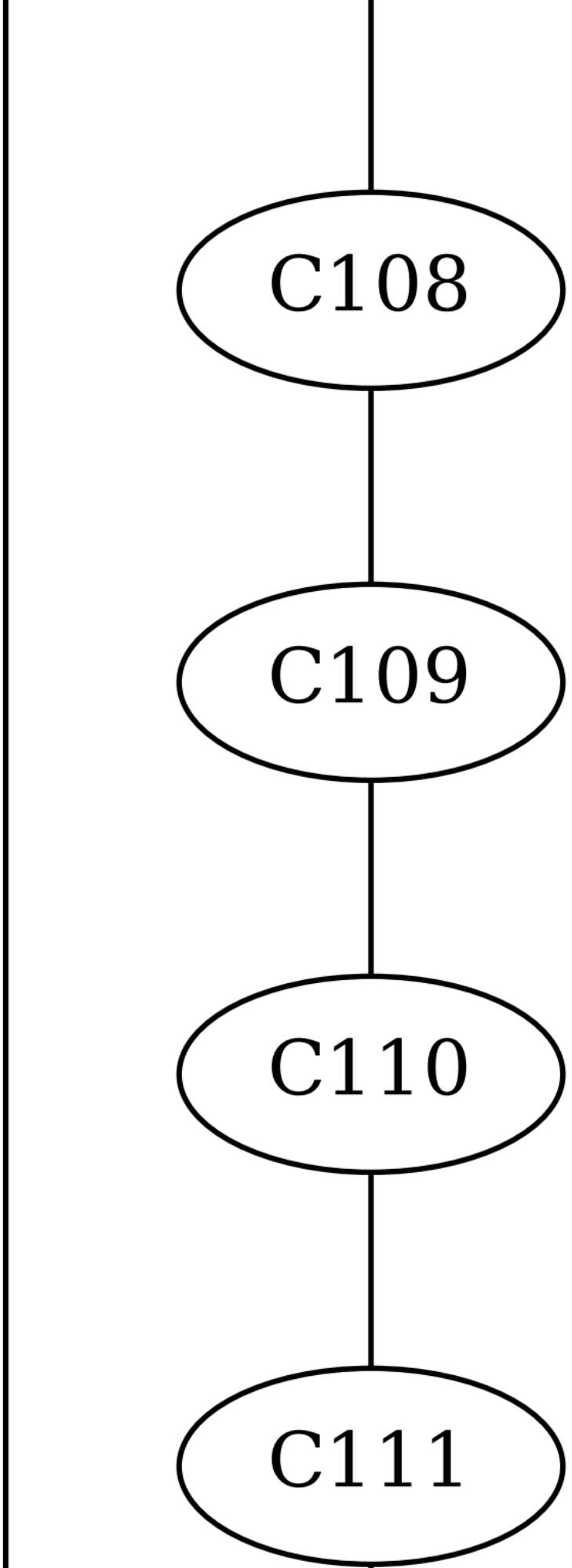
C108
C109
C110
C111

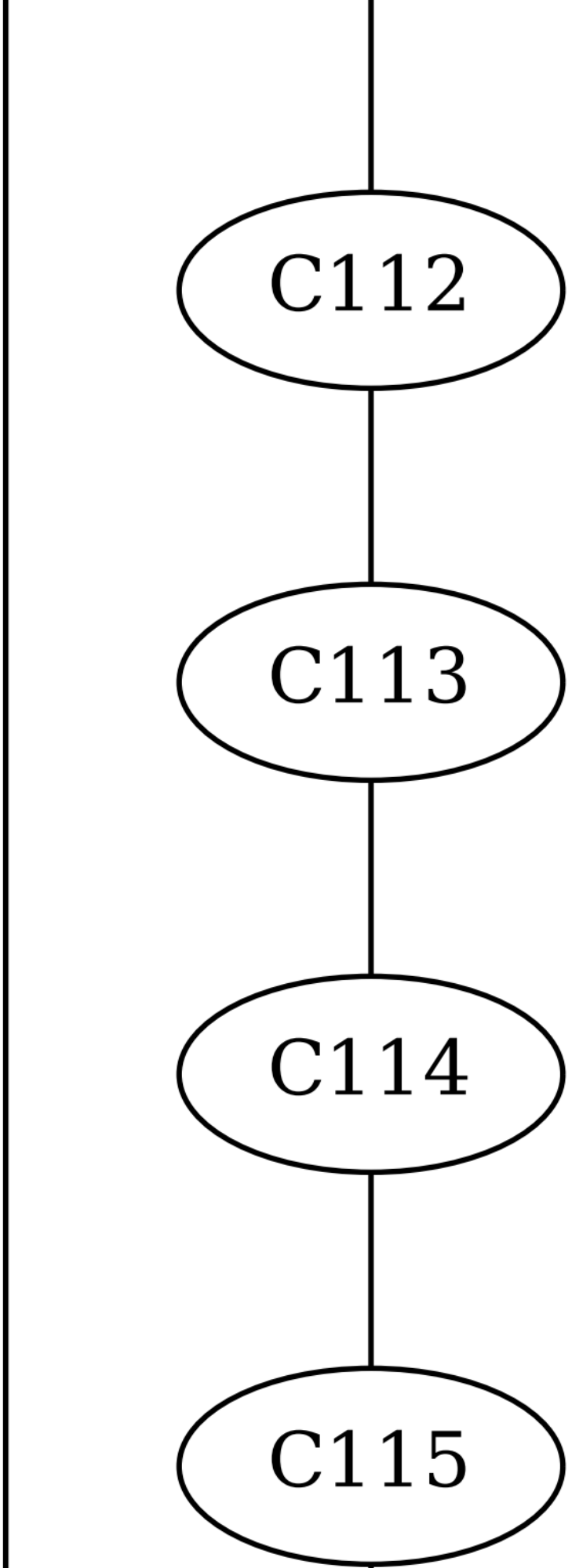
C112
C113
C114
C115

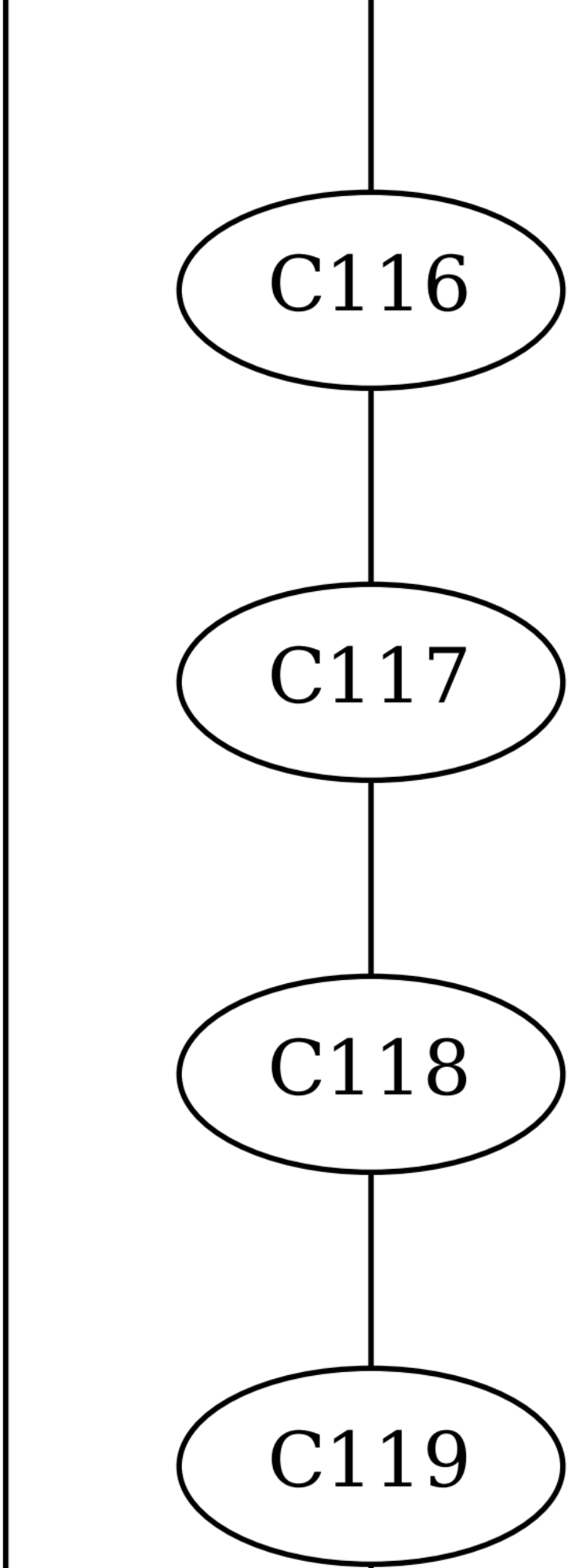
C116
C117
C118
C119

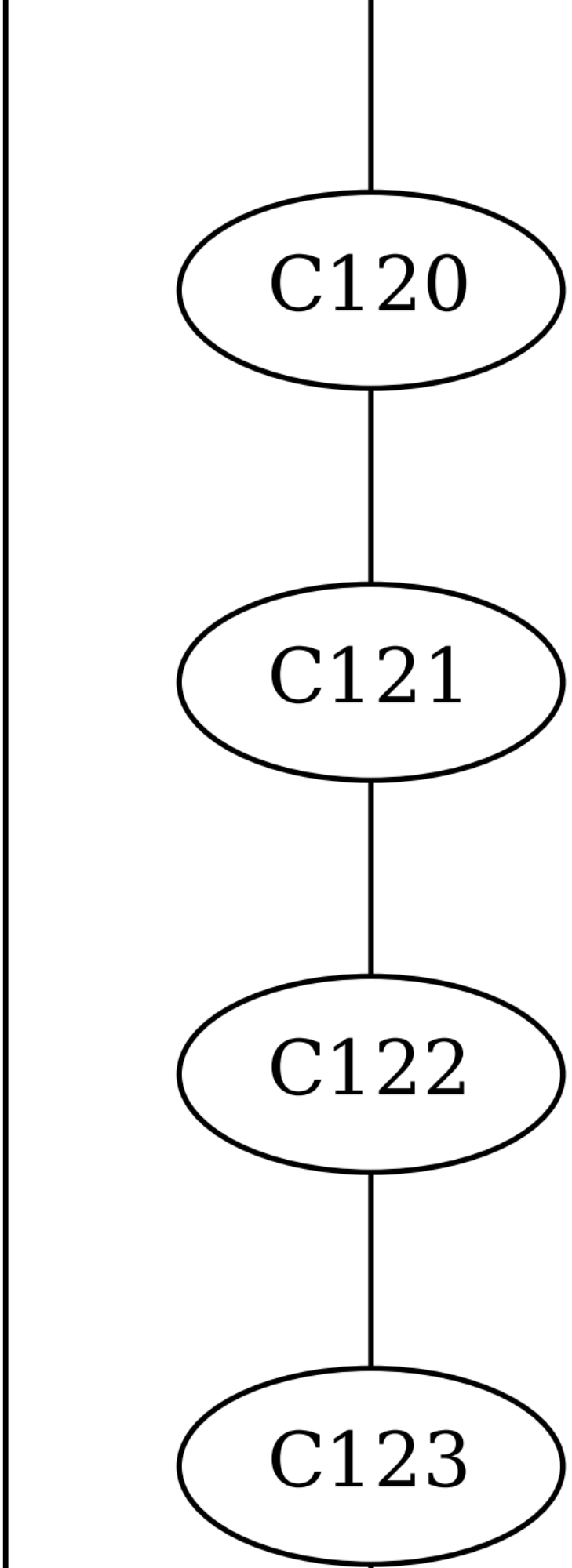
C120
C121
C122
C123

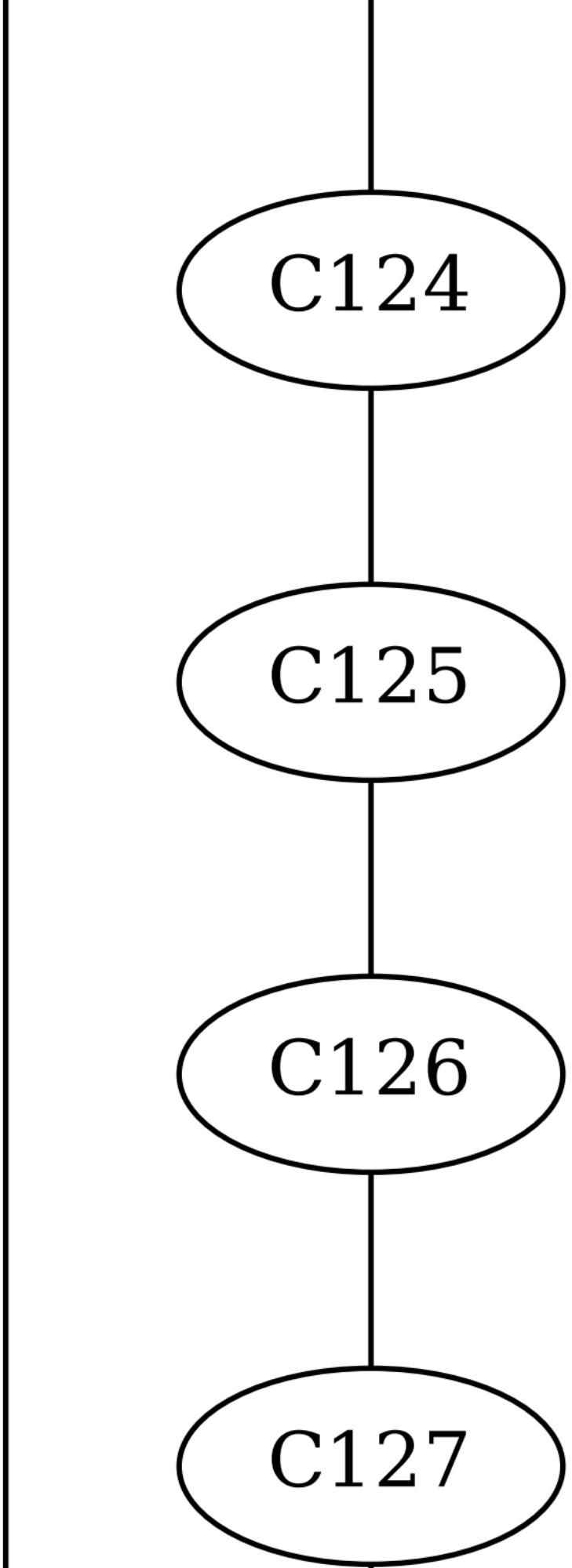
C124
C125
C126
C127

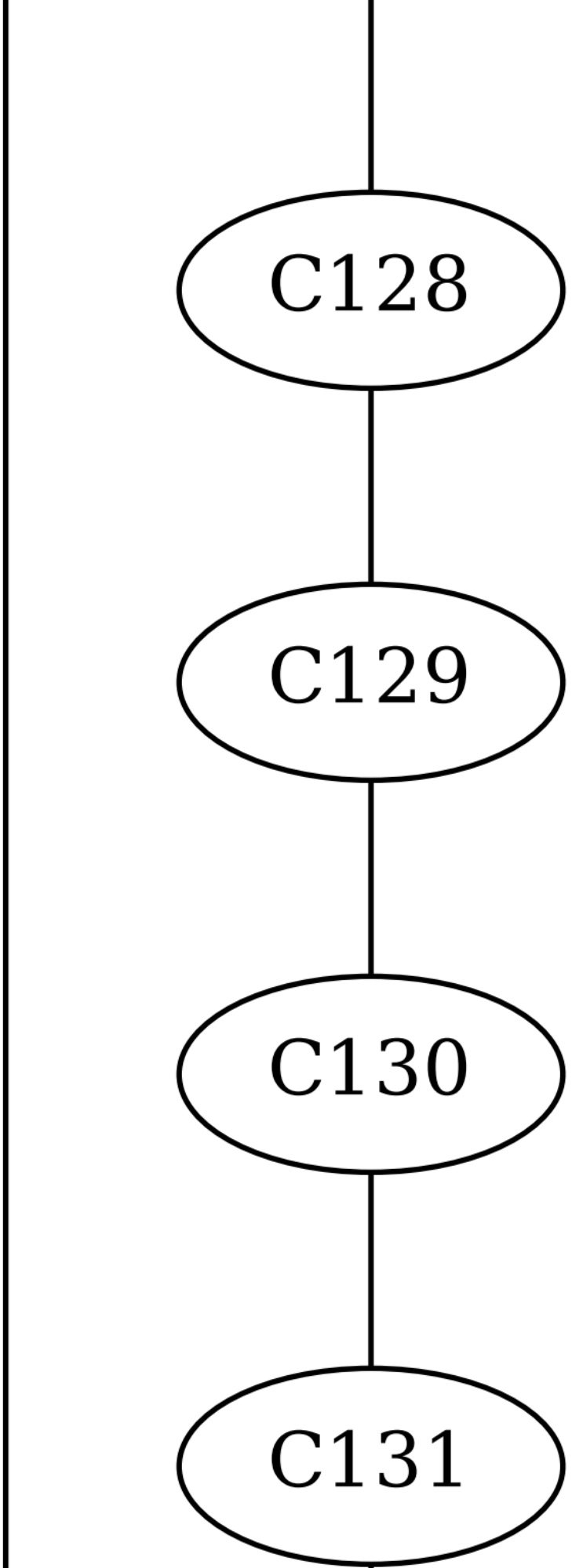
C128
C129
C130
C131

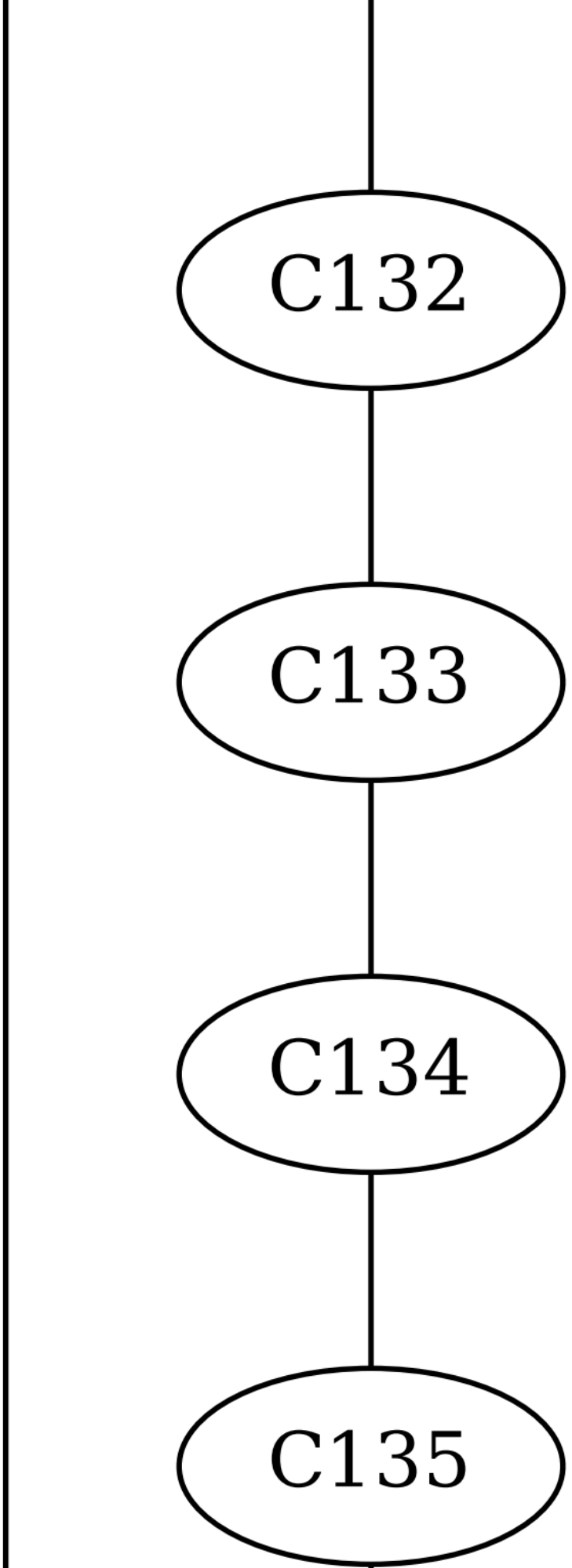
C132
C133
C134
C135

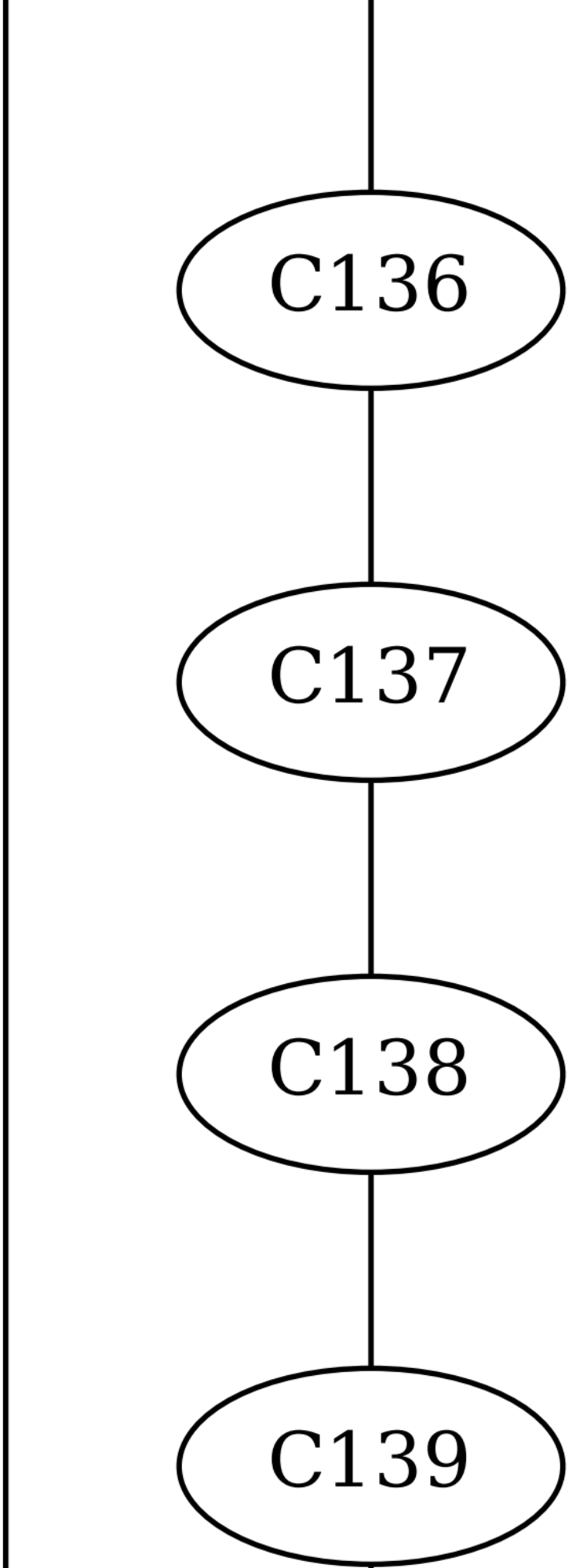
C136
C137
C138
C139

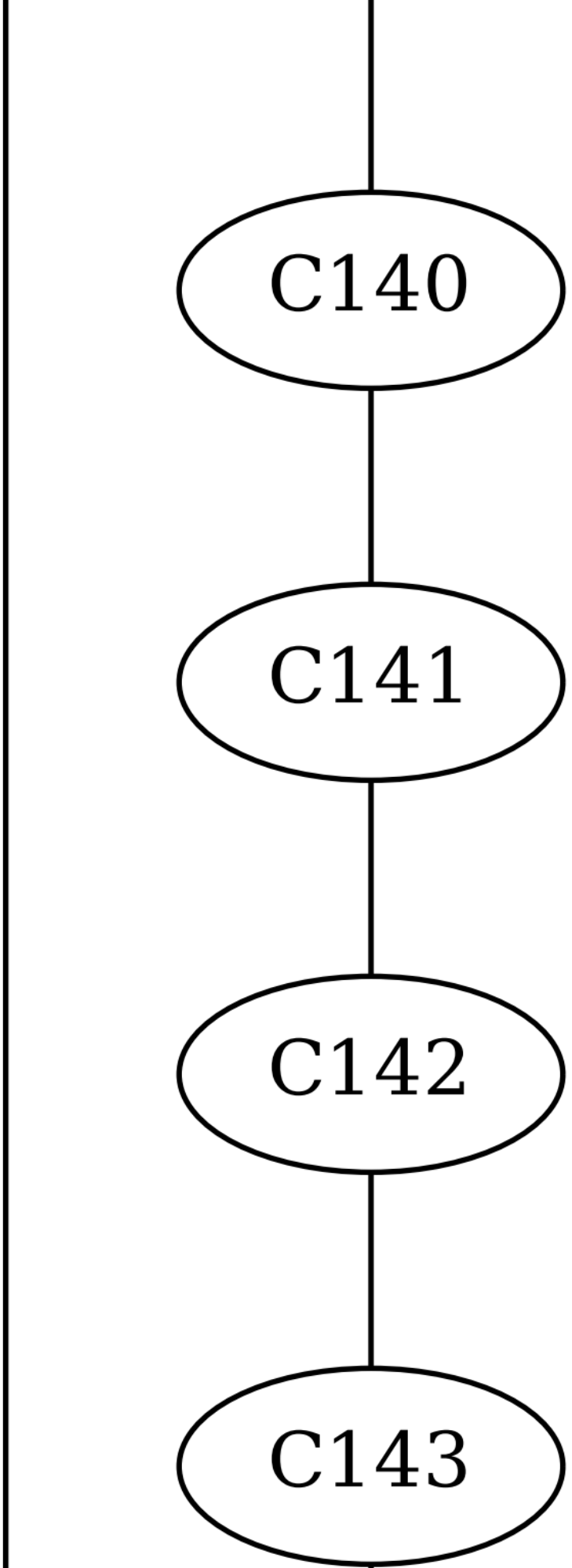
C140
C141
C142
C143

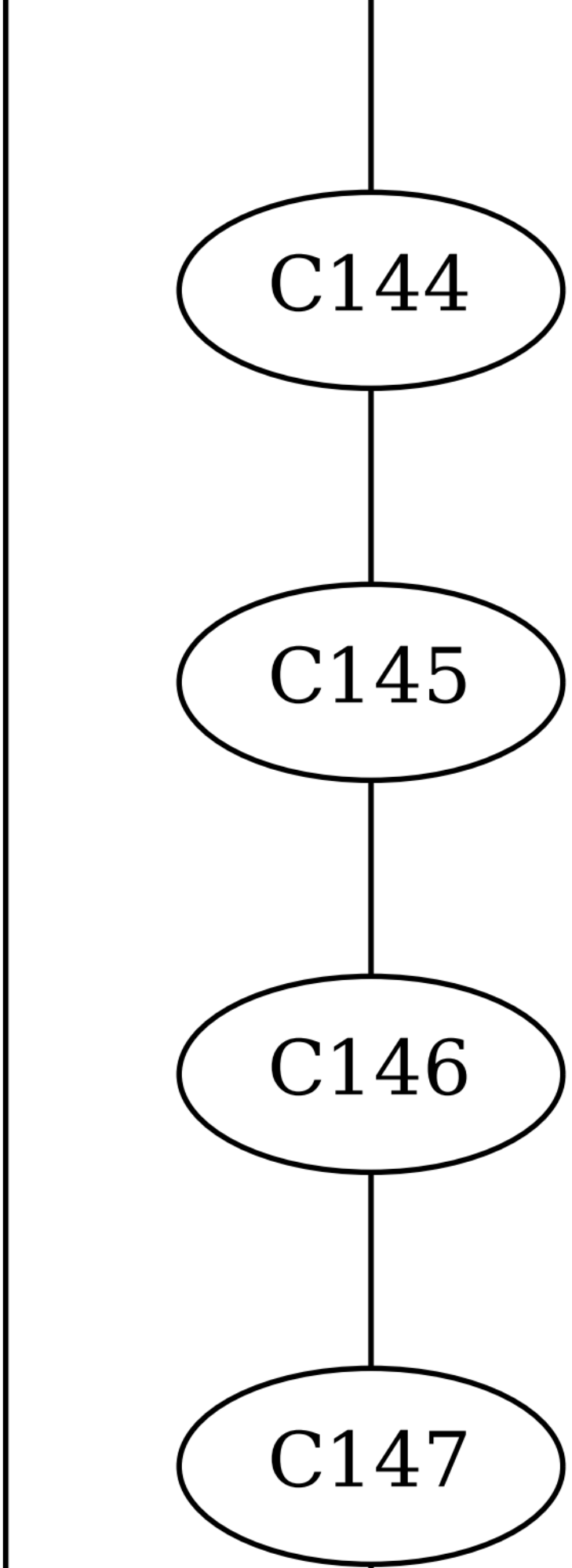
C144
C145
C146
C147

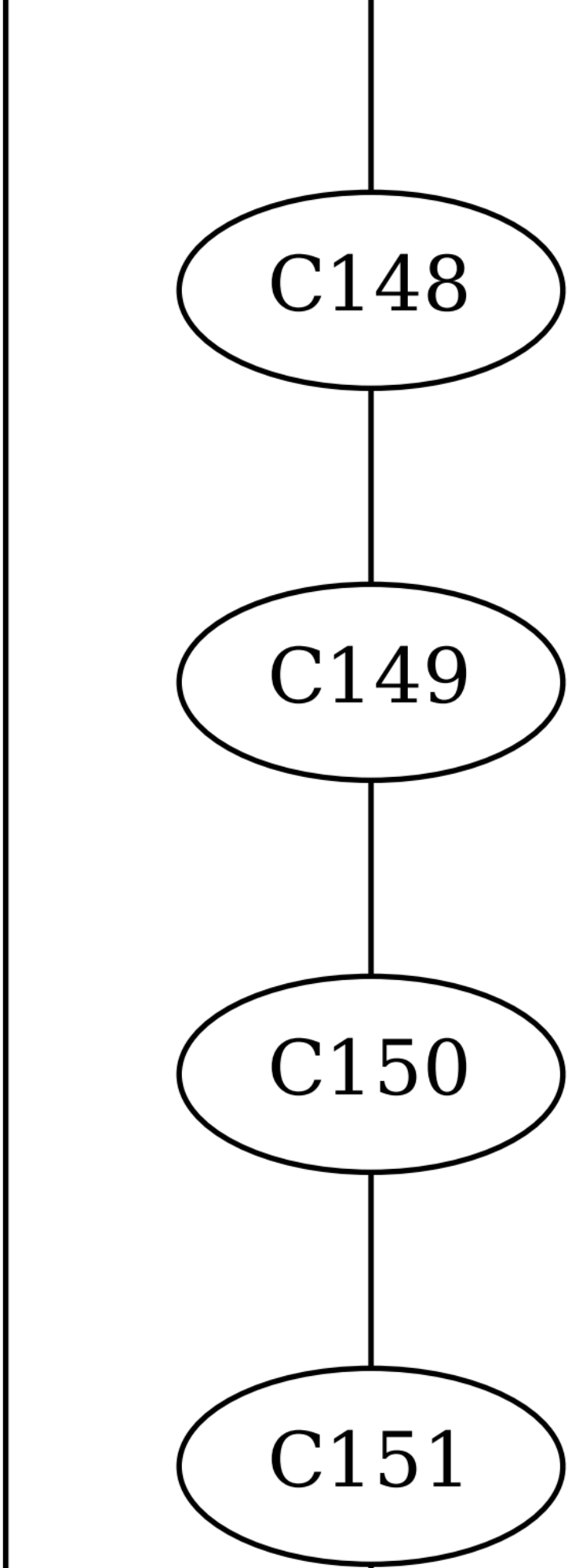
C148
C149
C150
C151

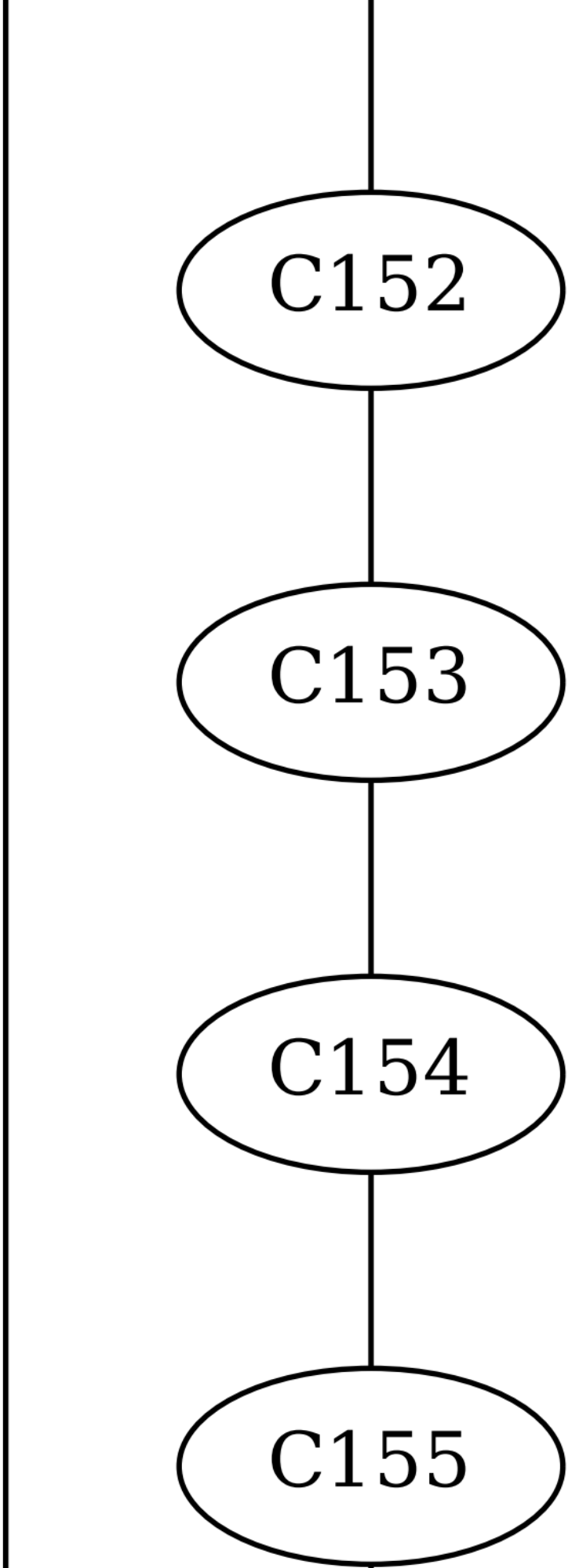
C152
C153
C154
C155

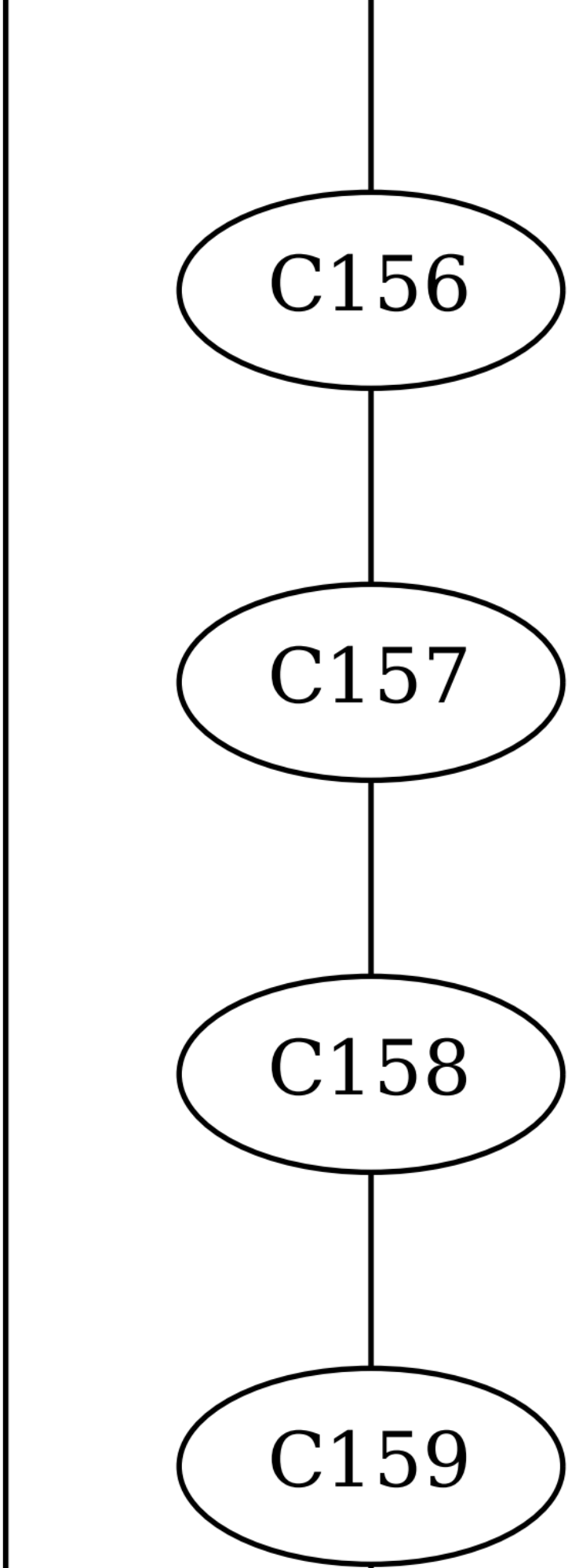
C156
C157
C158
C159

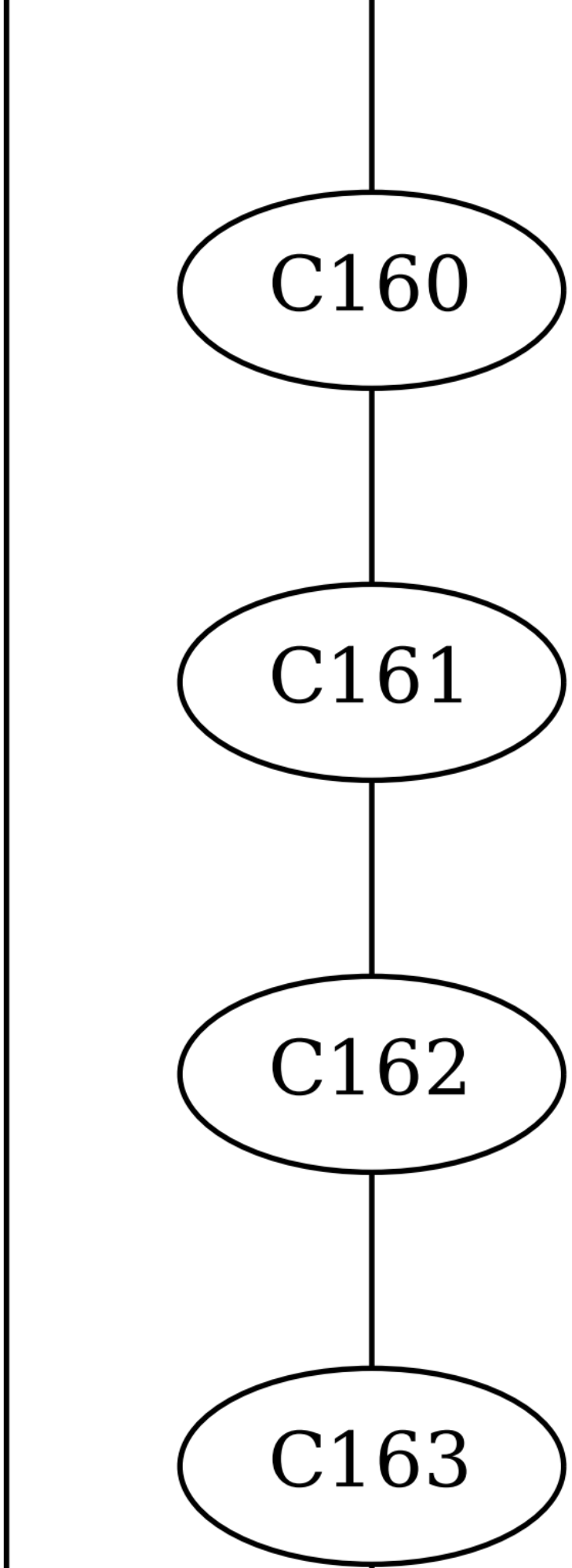
C160
C161
C162
C163

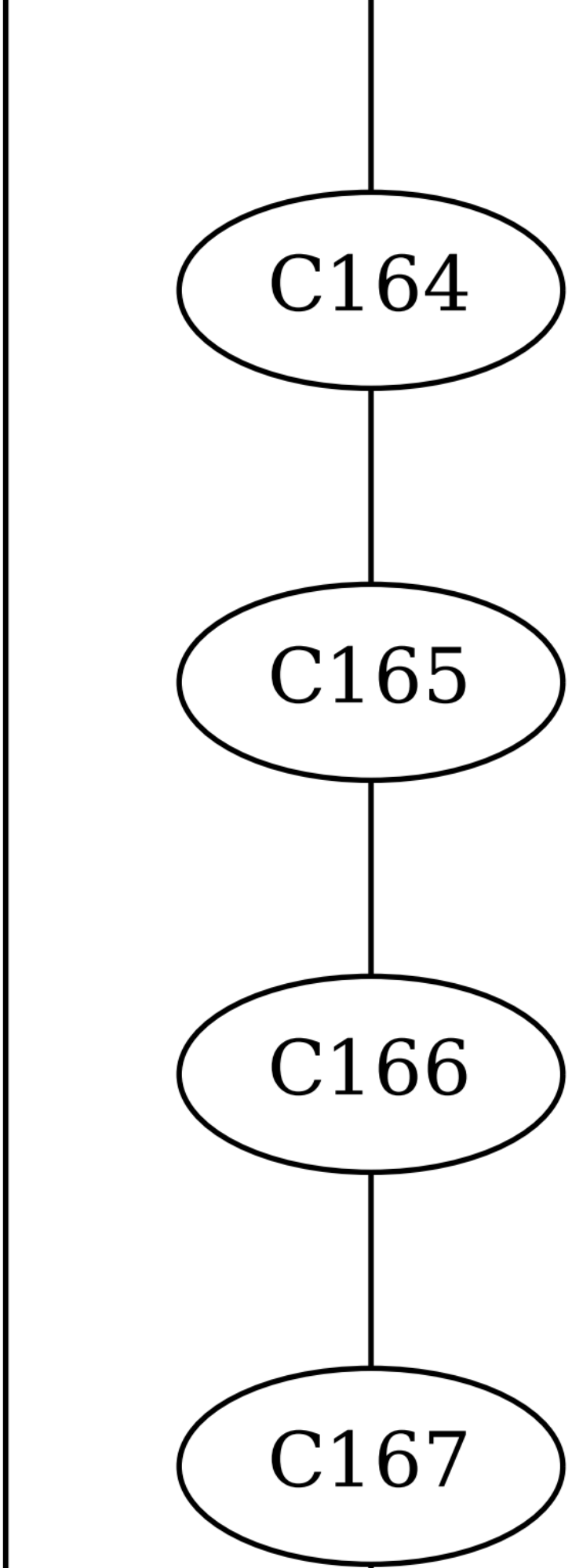
C164
C165
C166
C167

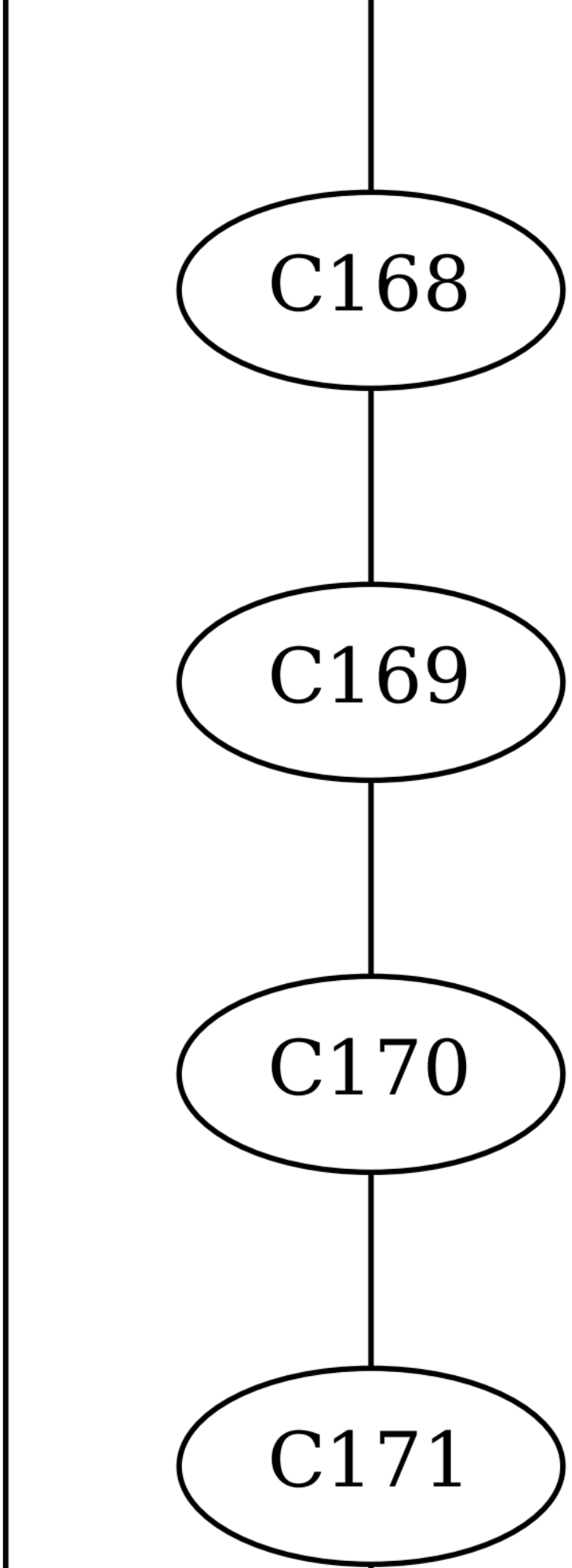
C168
C169
C170
C171

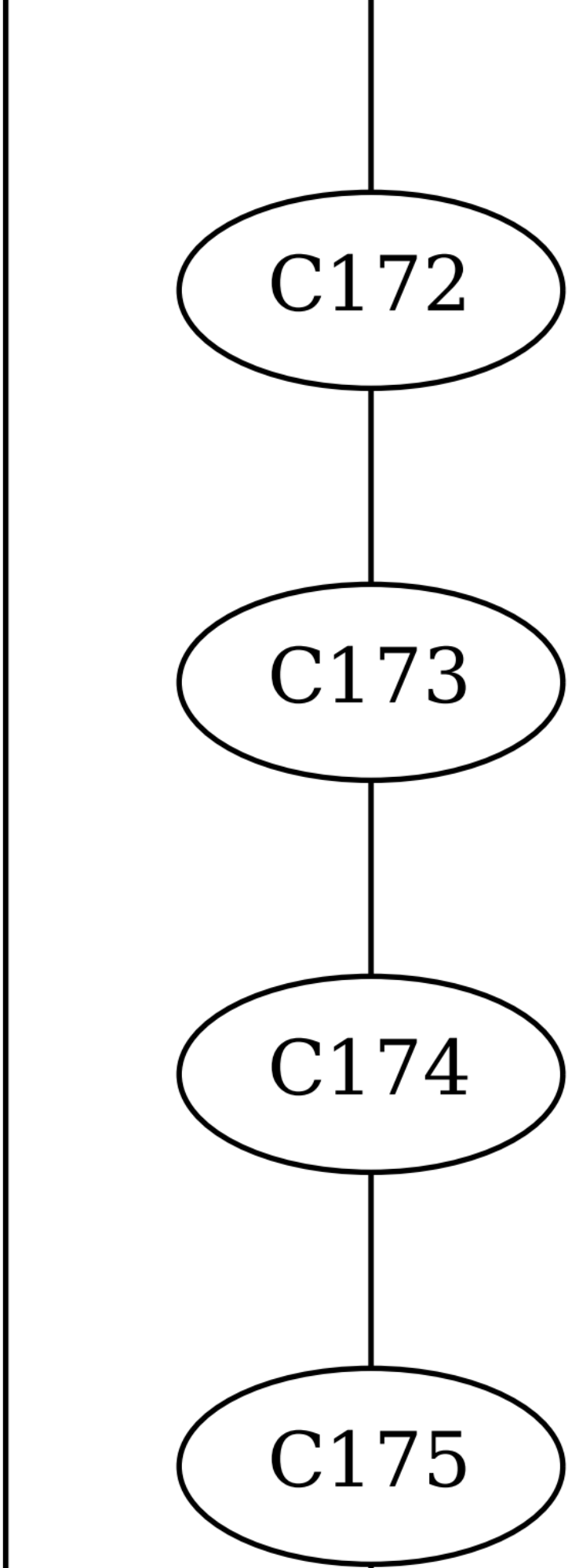
C172
C173
C174
C175

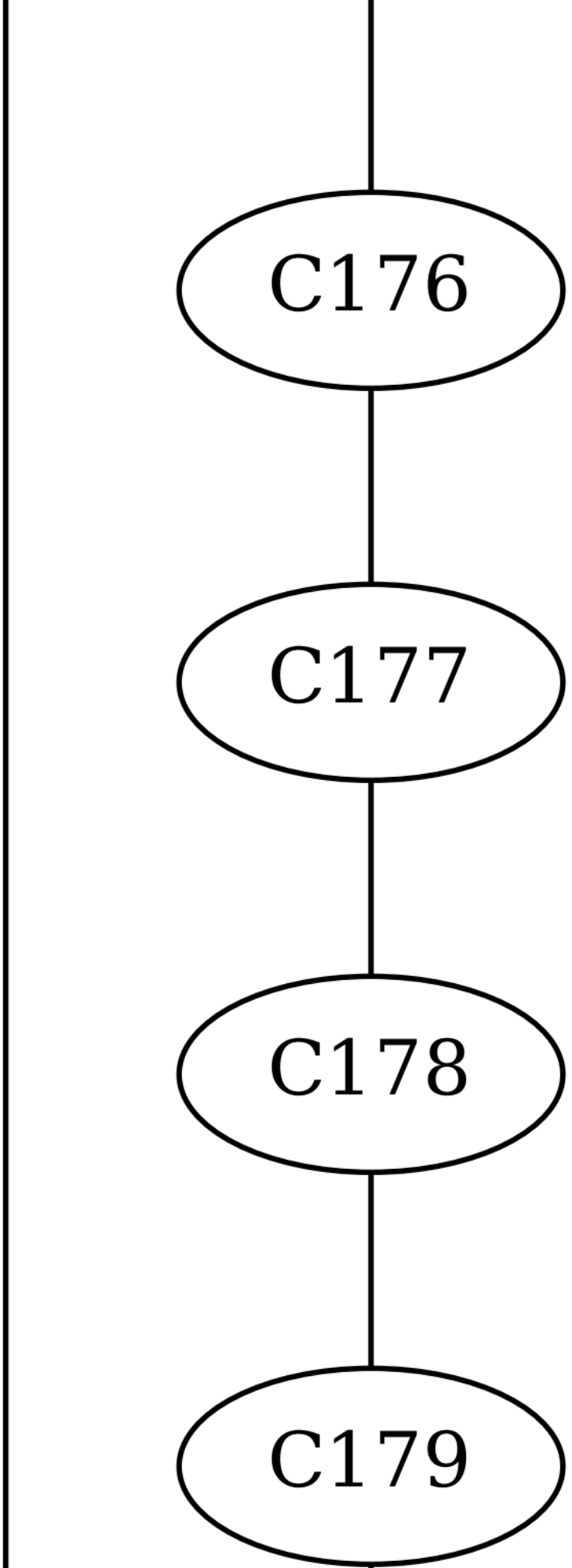
C176
C177
C178
C179

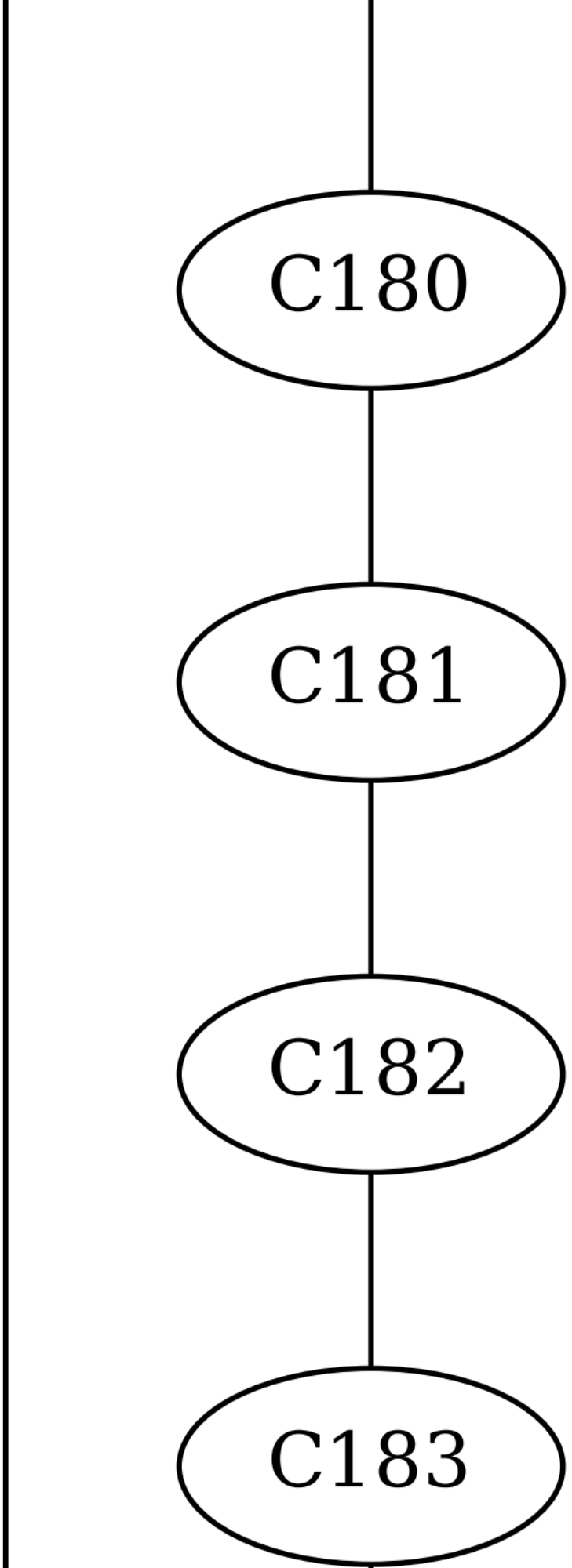
C180
C181
C182
C183

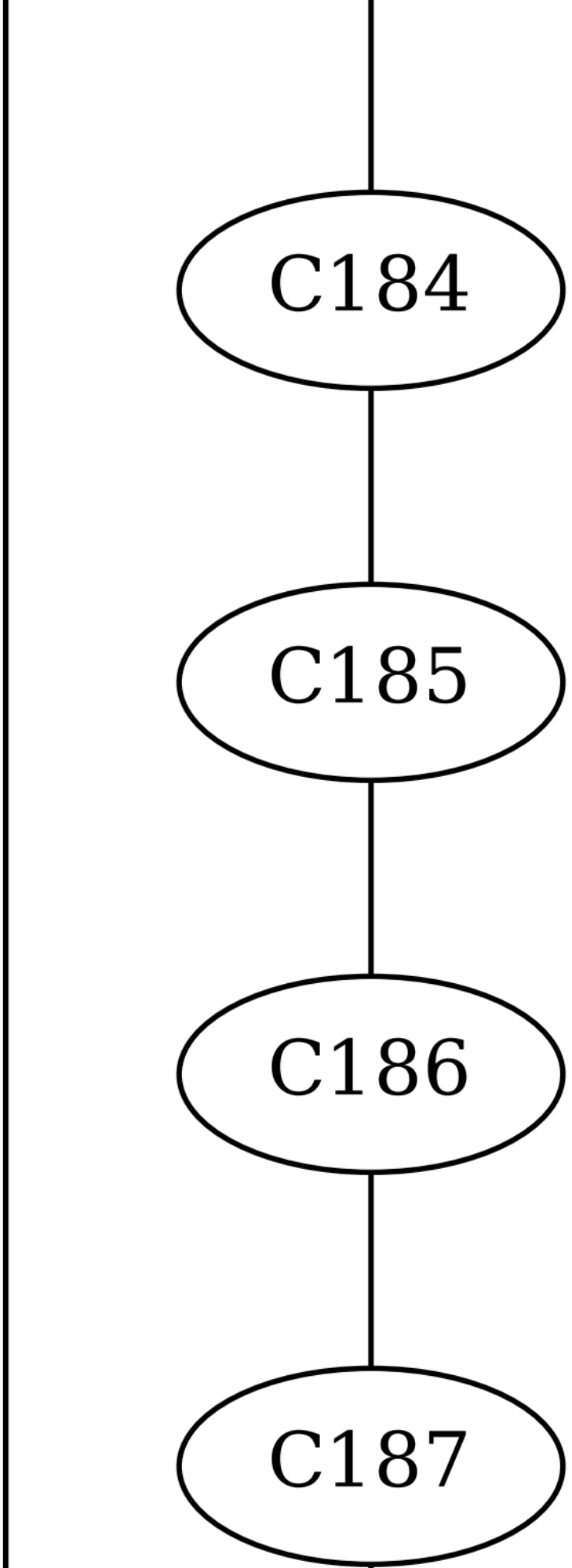
C184
C185
C186
C187

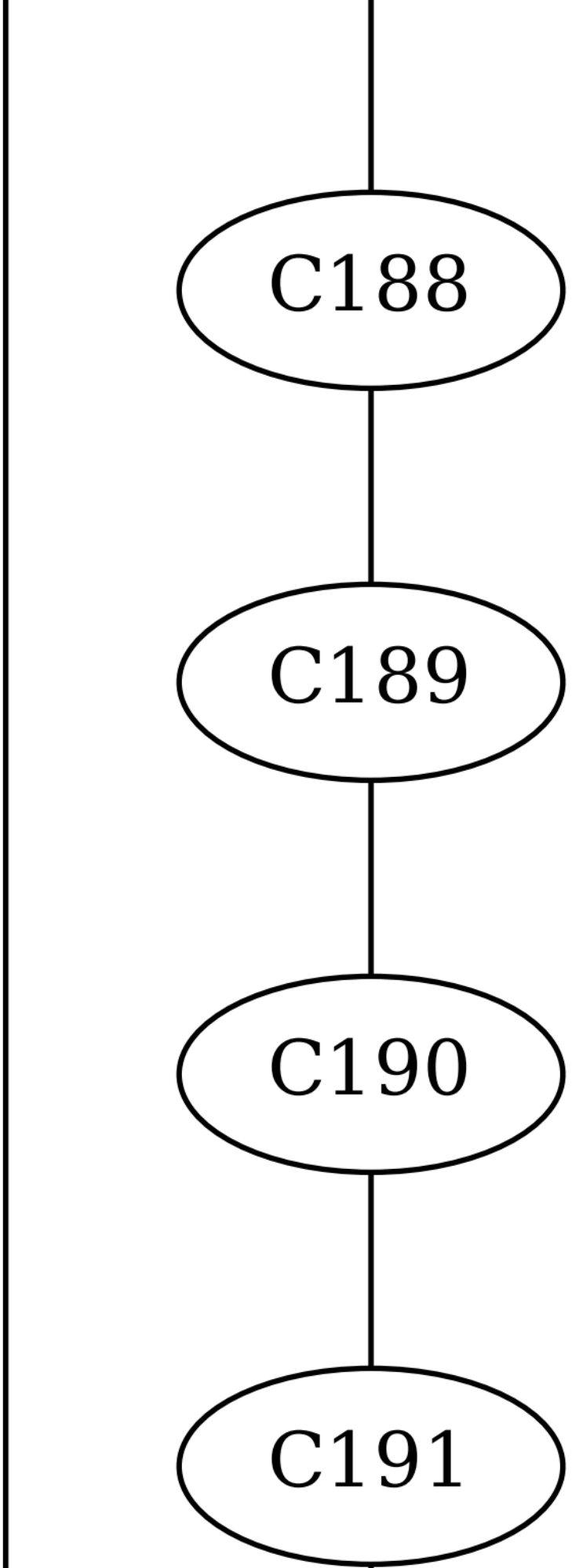
C188
C189
C190
C191

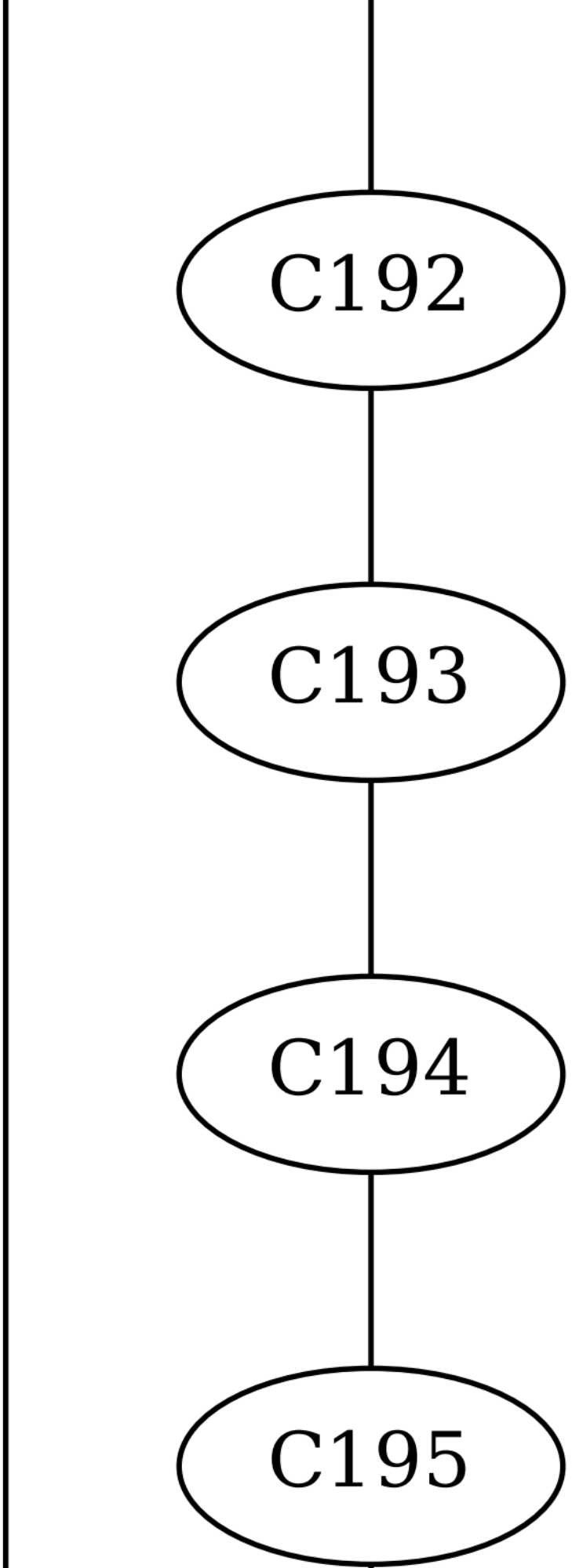
C192
C193
C194
C195

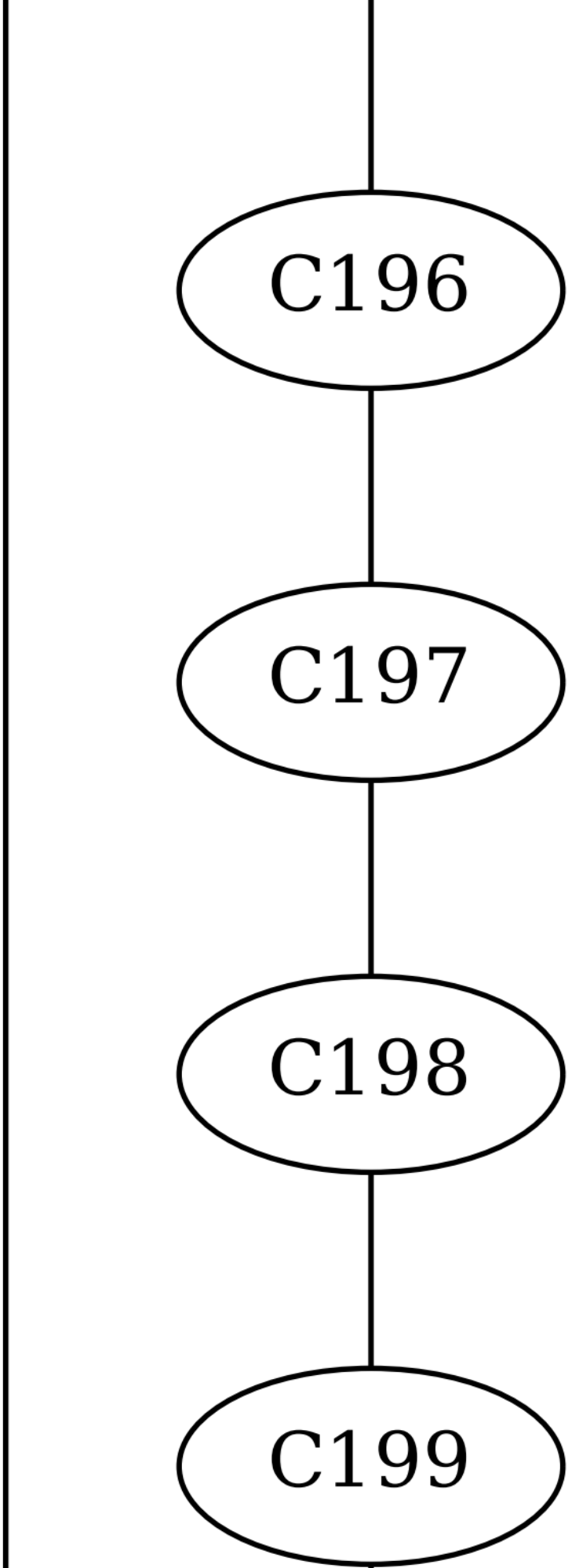
C196
C197
C198
C199

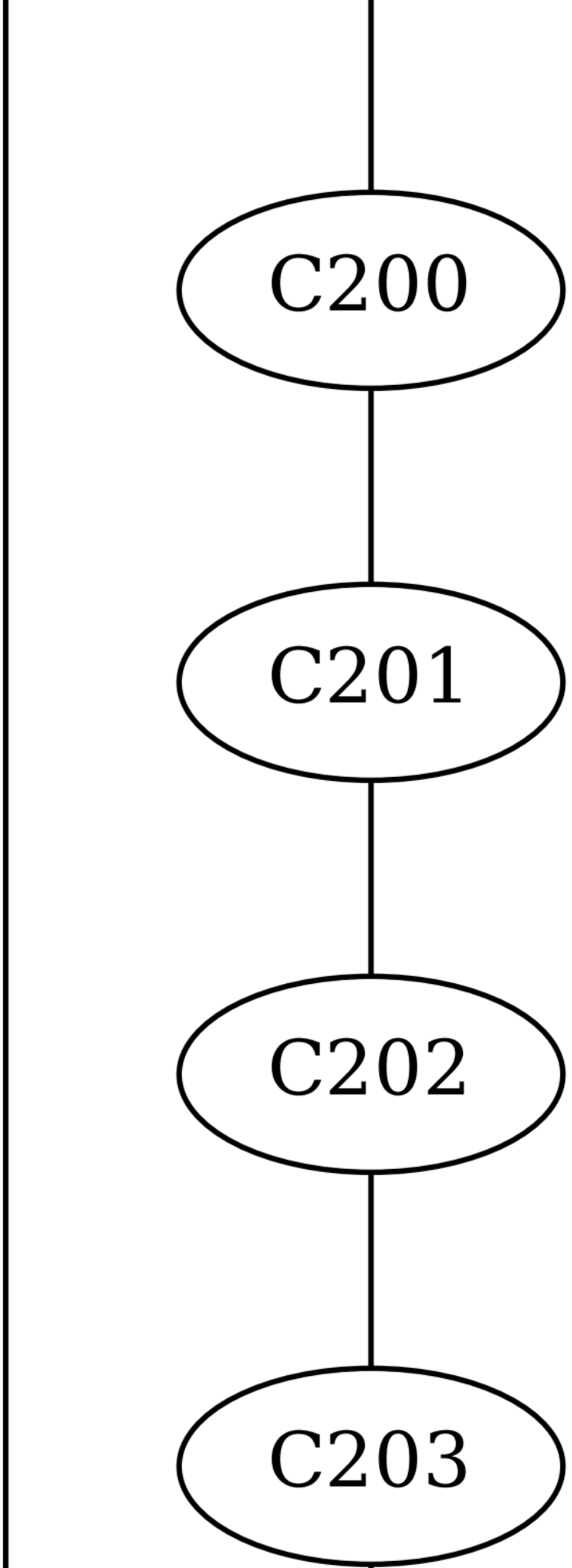
C200
C201
C202
C203

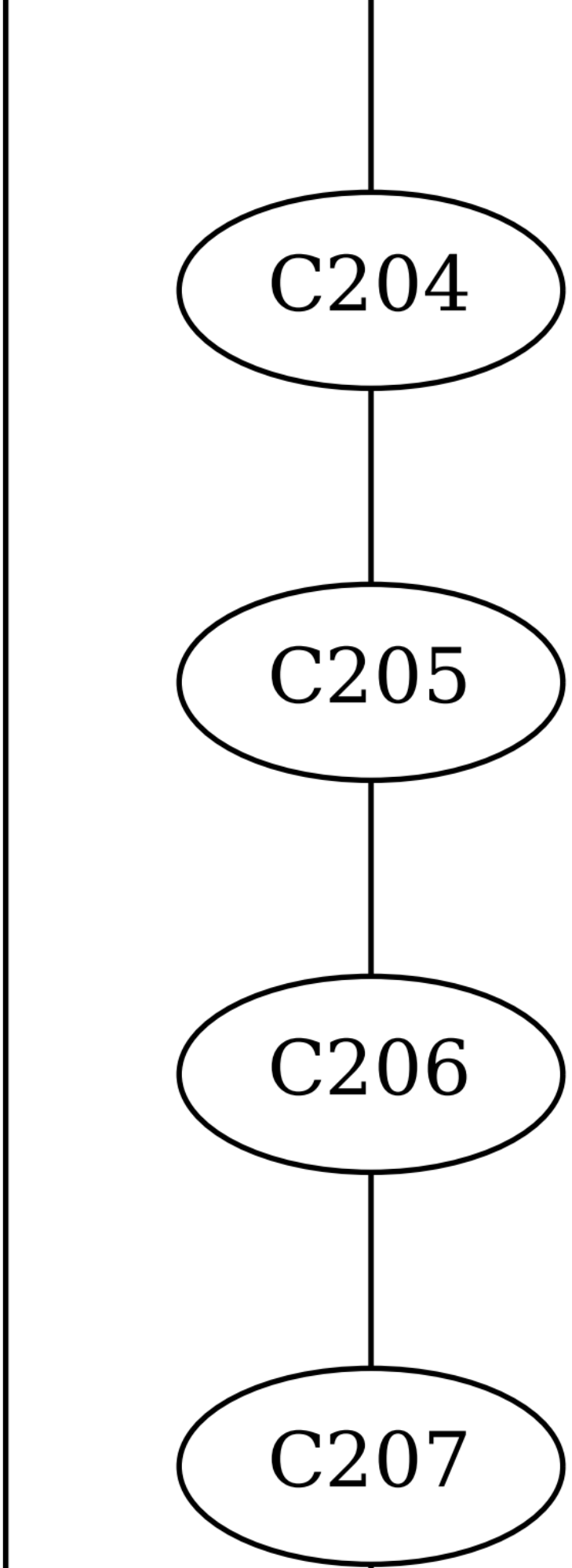
C204
C205
C206
C207

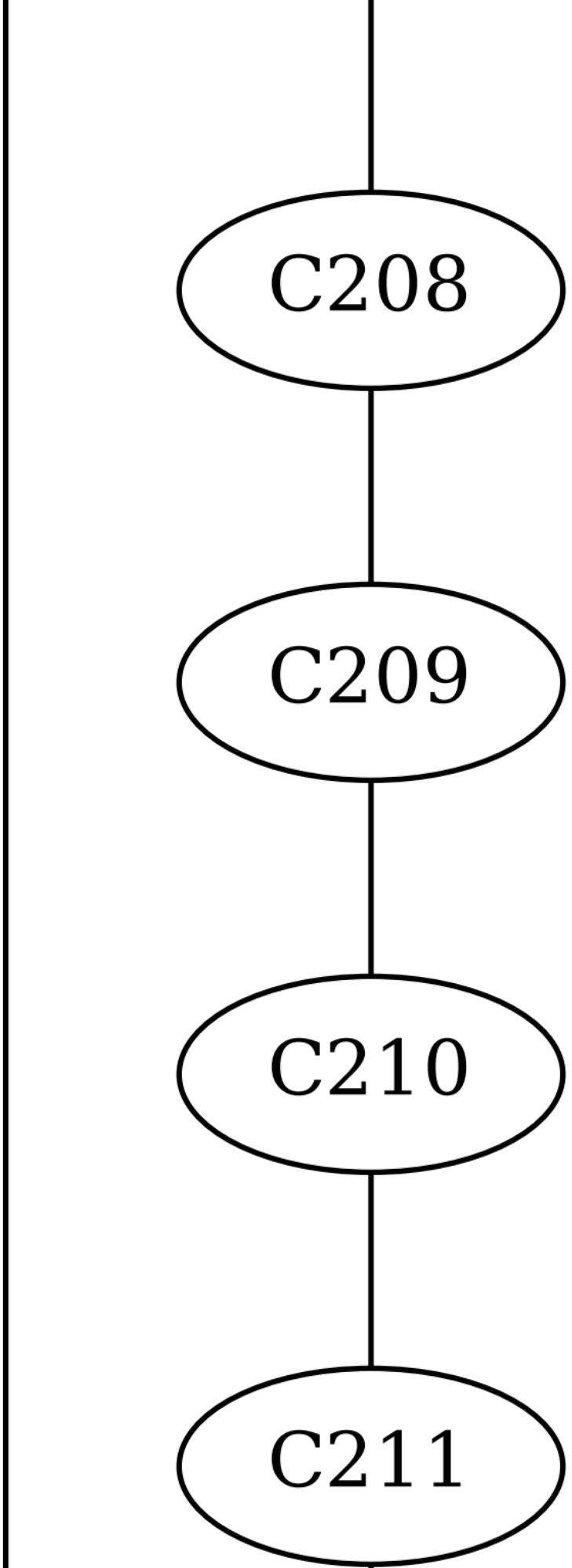
C208
C209
C210
C211

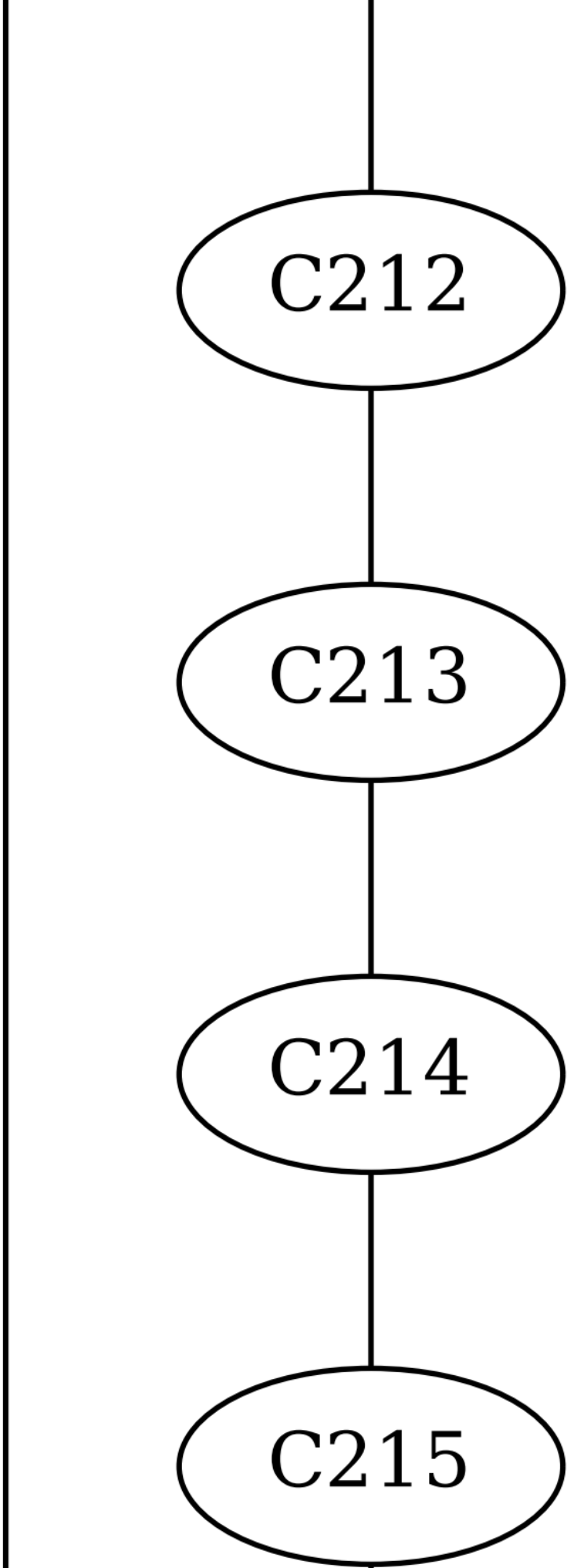
C212
C213
C214
C215

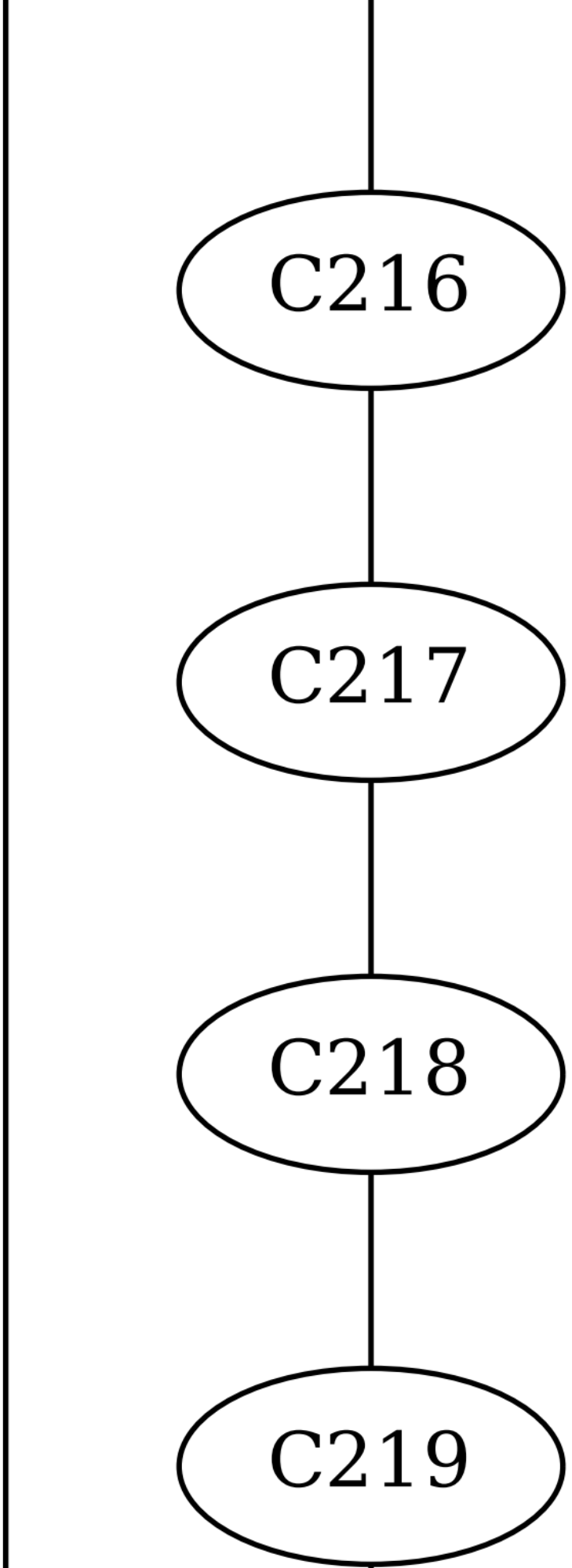
C216
C217
C218
C219

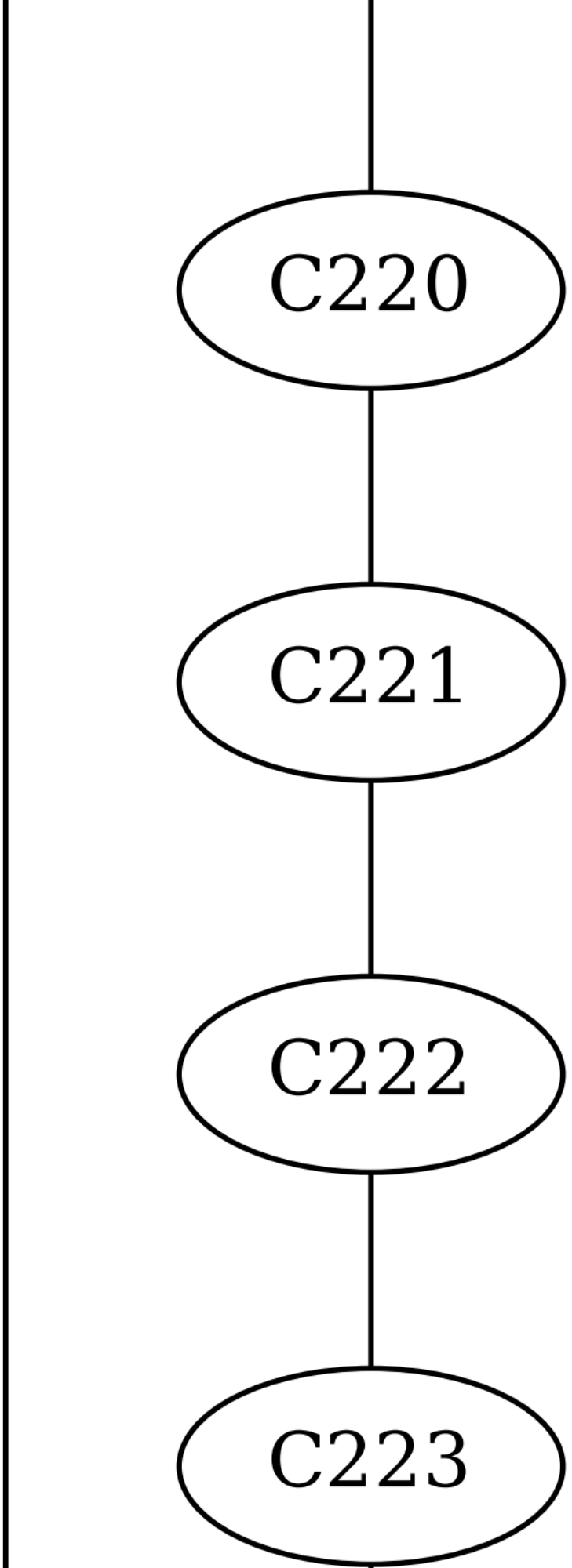
C220
C221
C222
C223

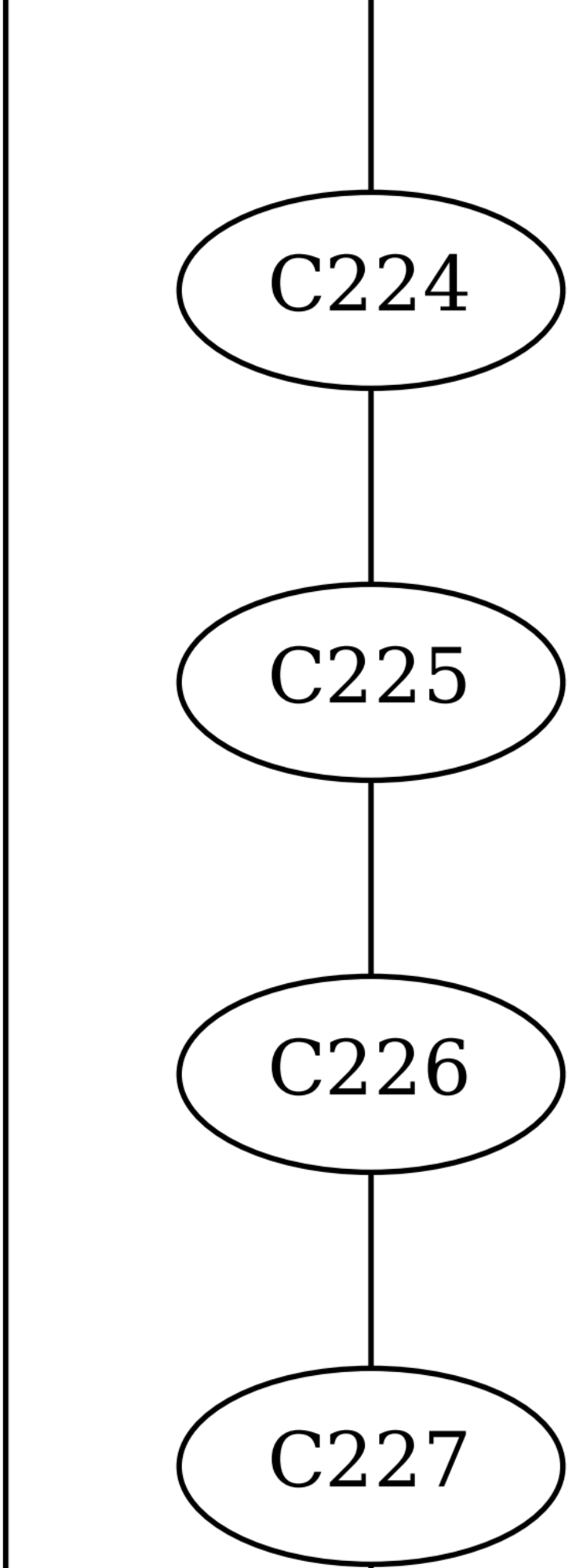
C224
C225
C226
C227

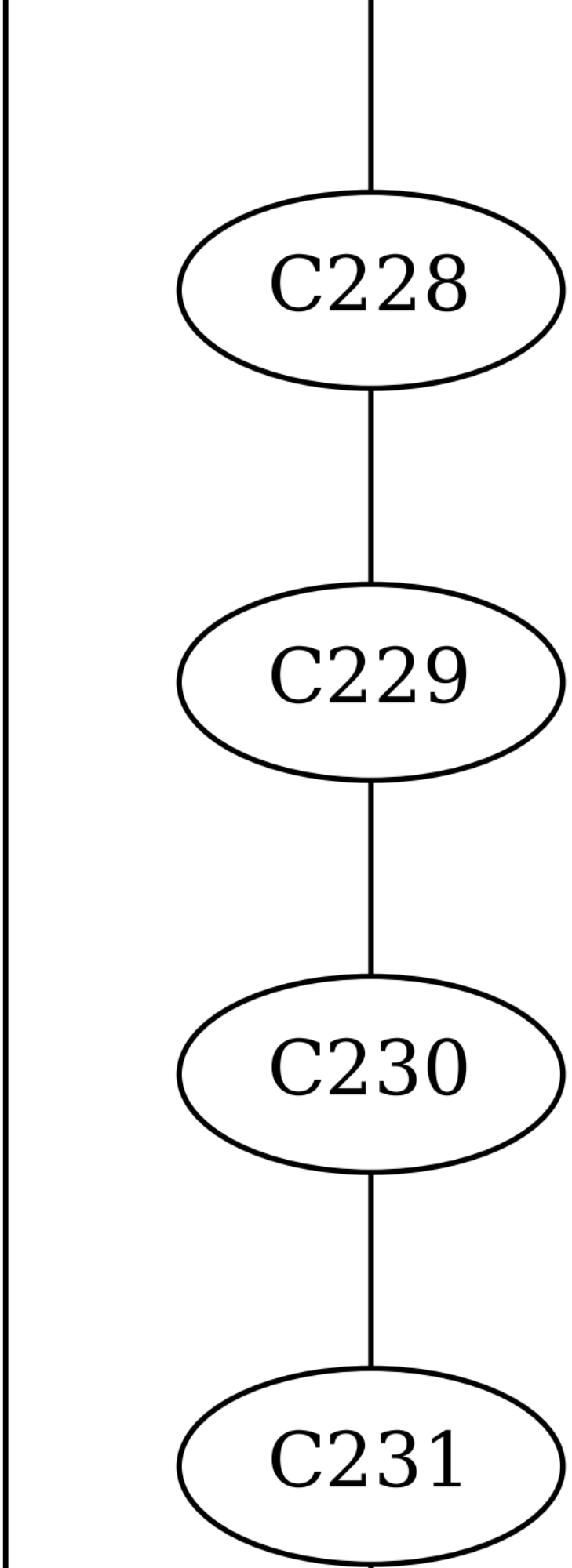
C228
C229
C230
C231

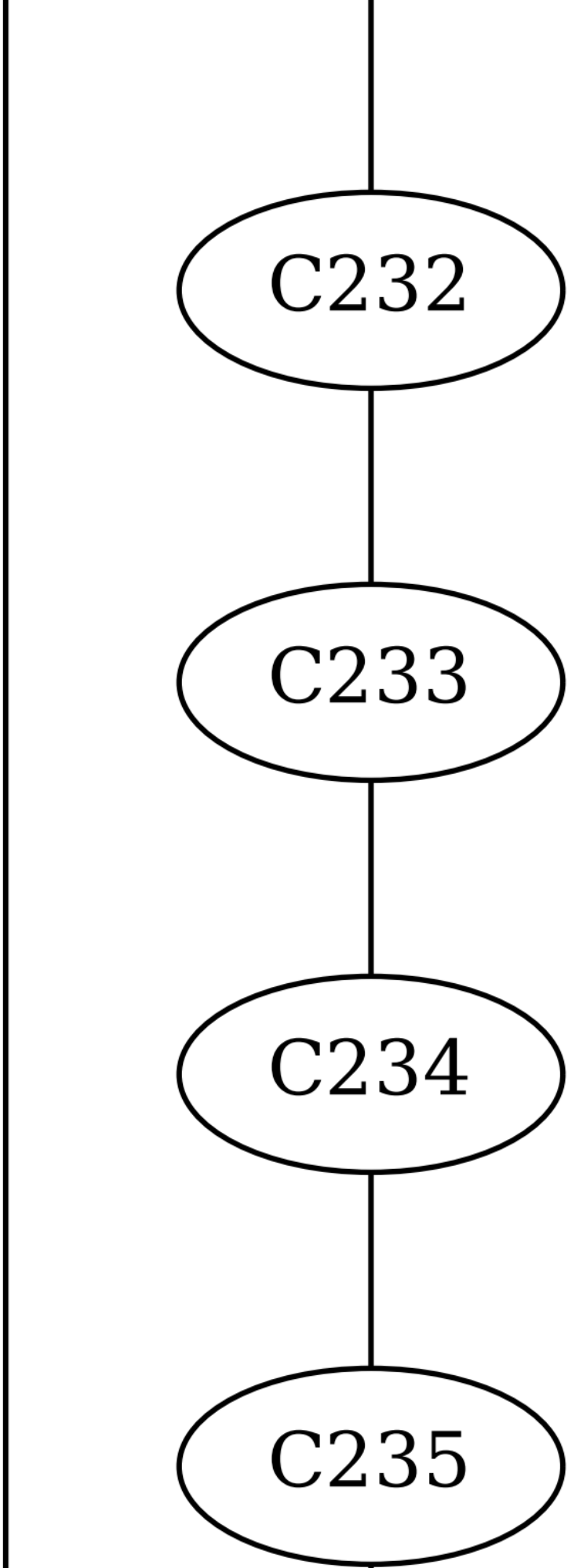
C232
C233
C234
C235

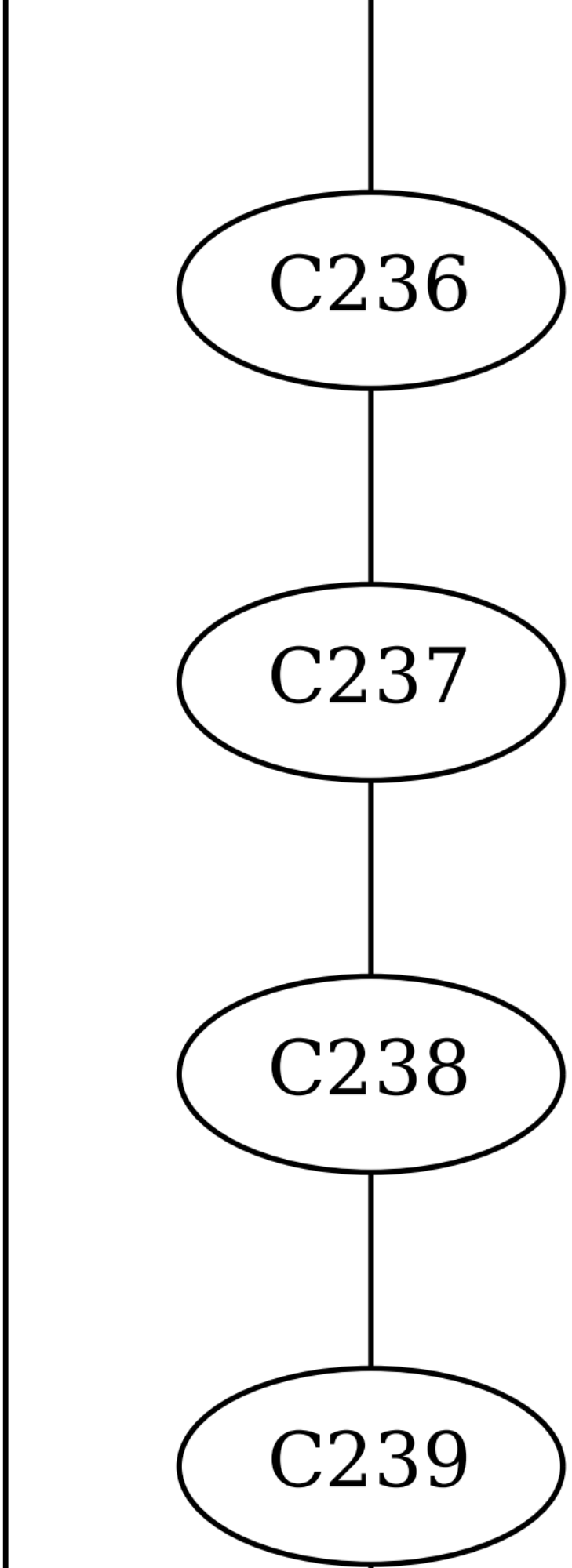
C236
C237
C238
C239

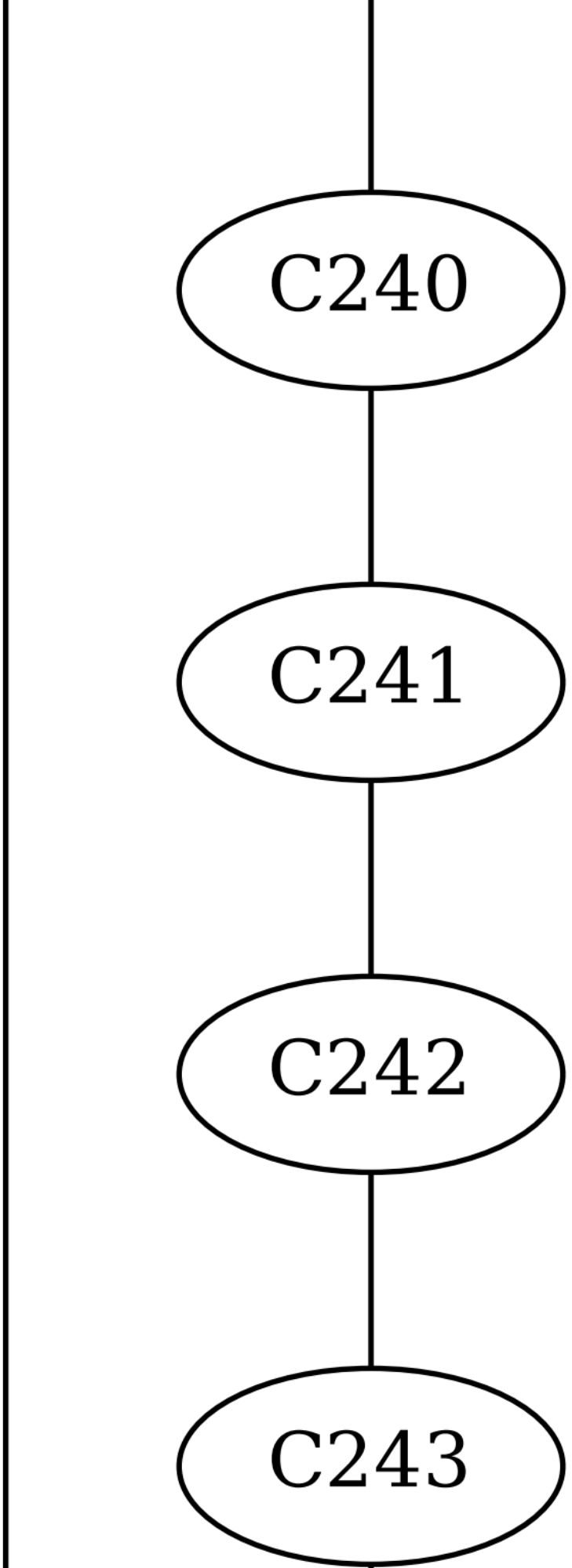
C240
C241
C242
C243

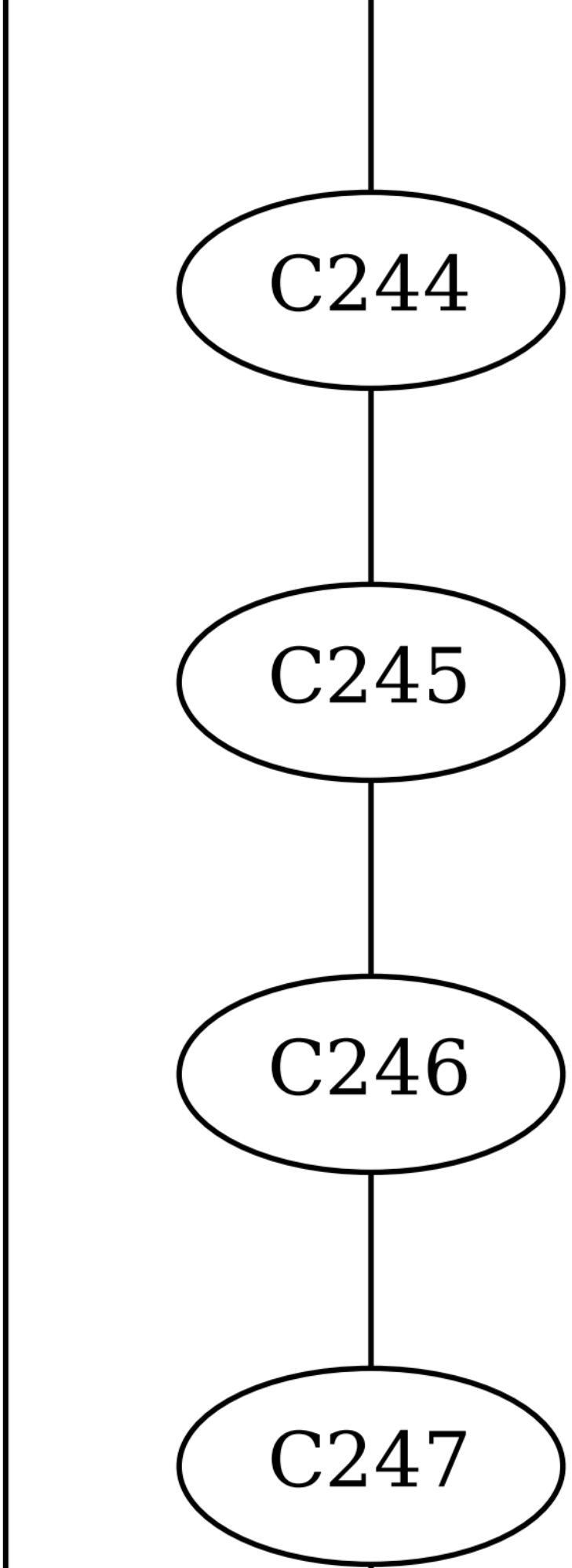
C244
C245
C246
C247

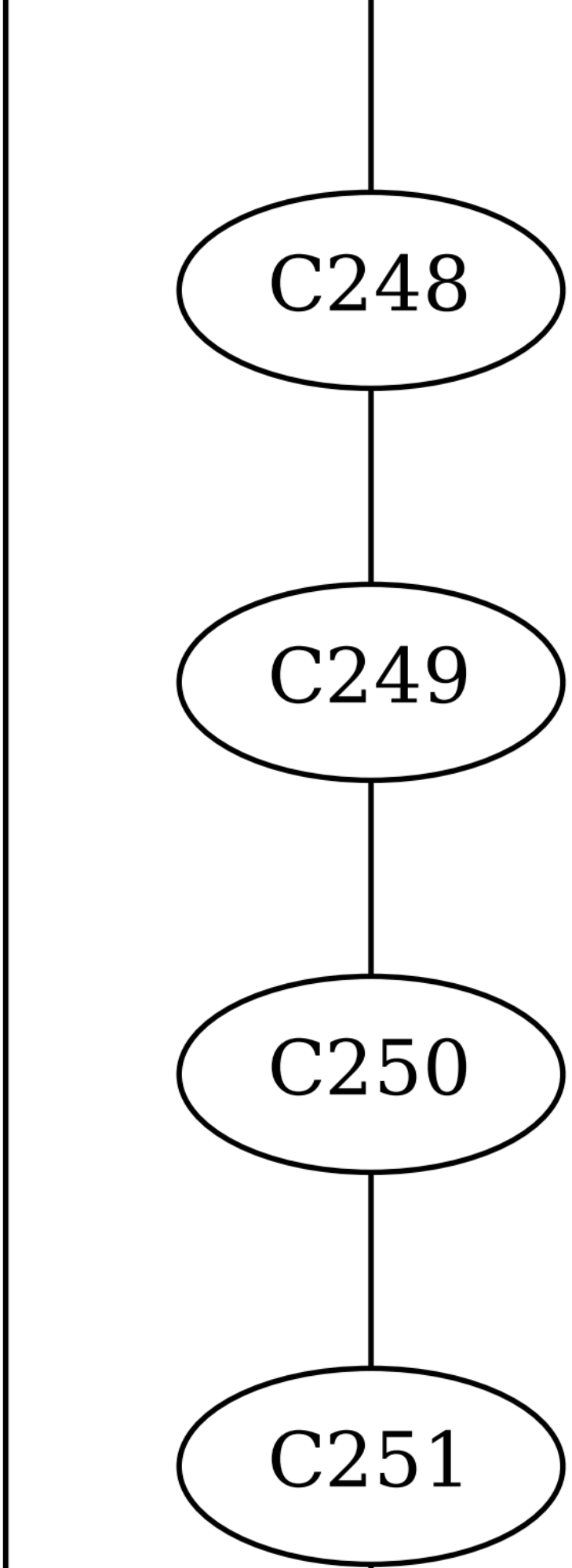
C248
C249
C250
C251

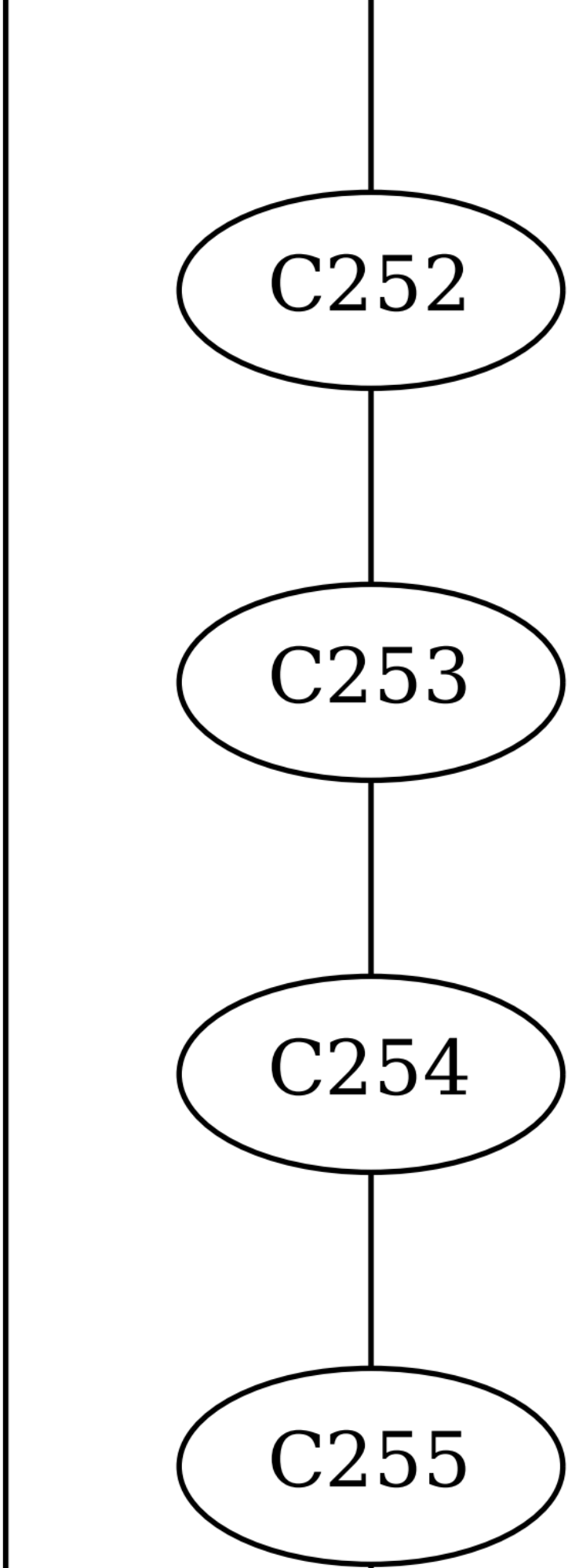
C252
C253
C254
C255

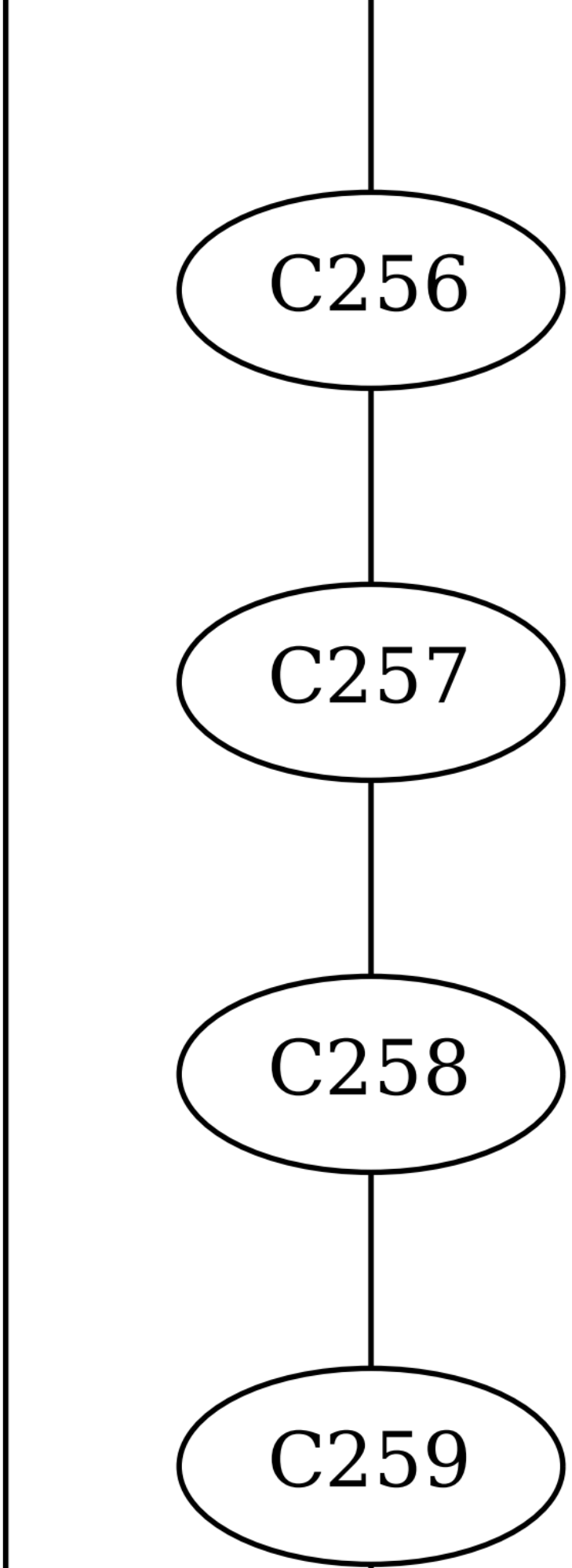
C256
C257
C258
C259

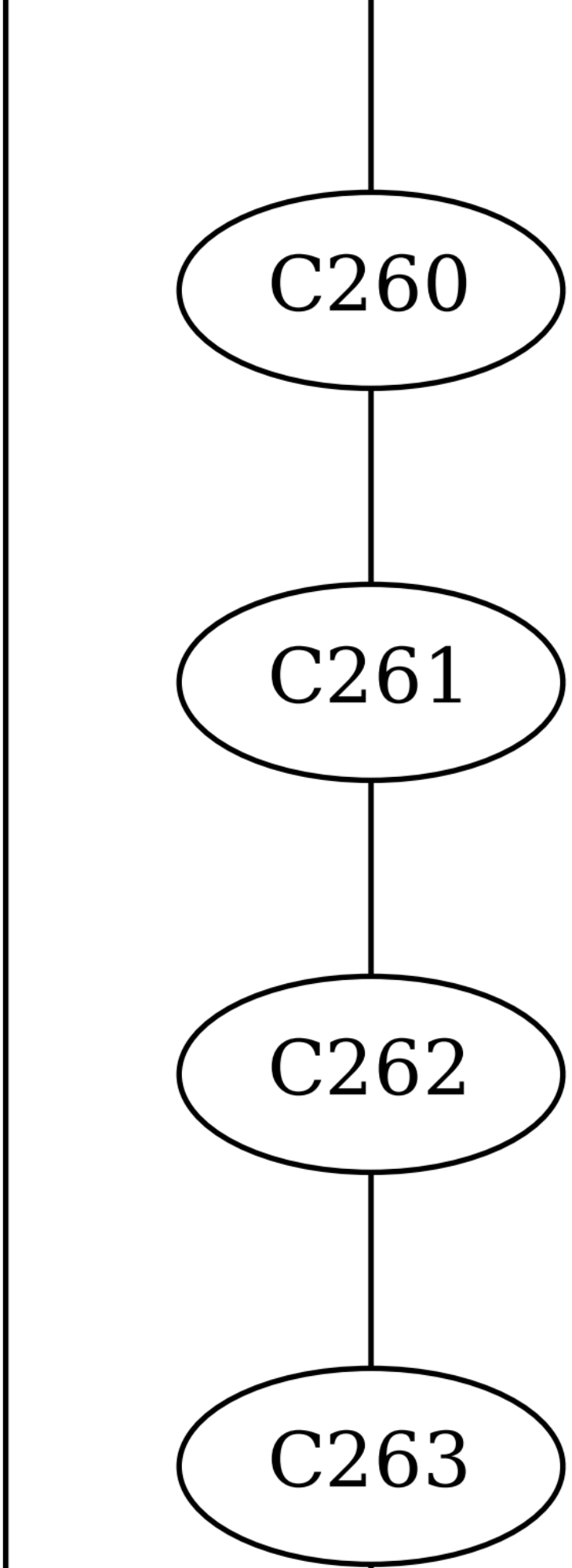
C260
C261
C262
C263

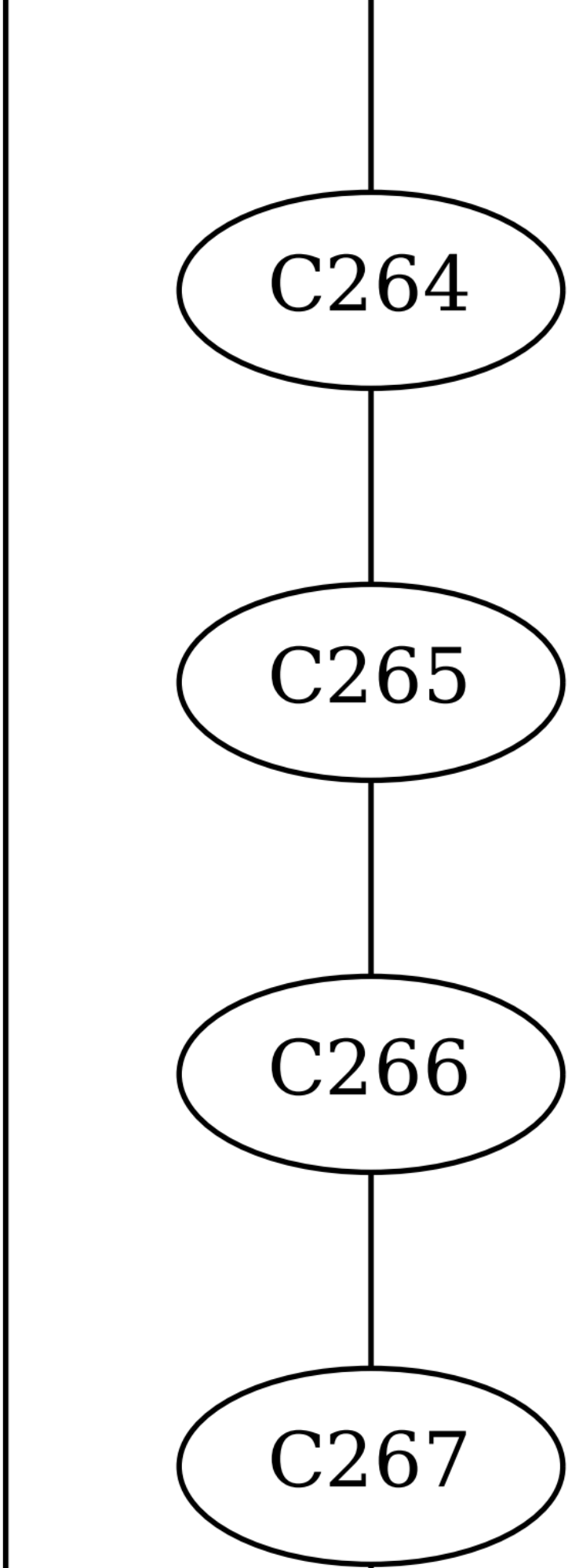
C264
C265
C266
C267

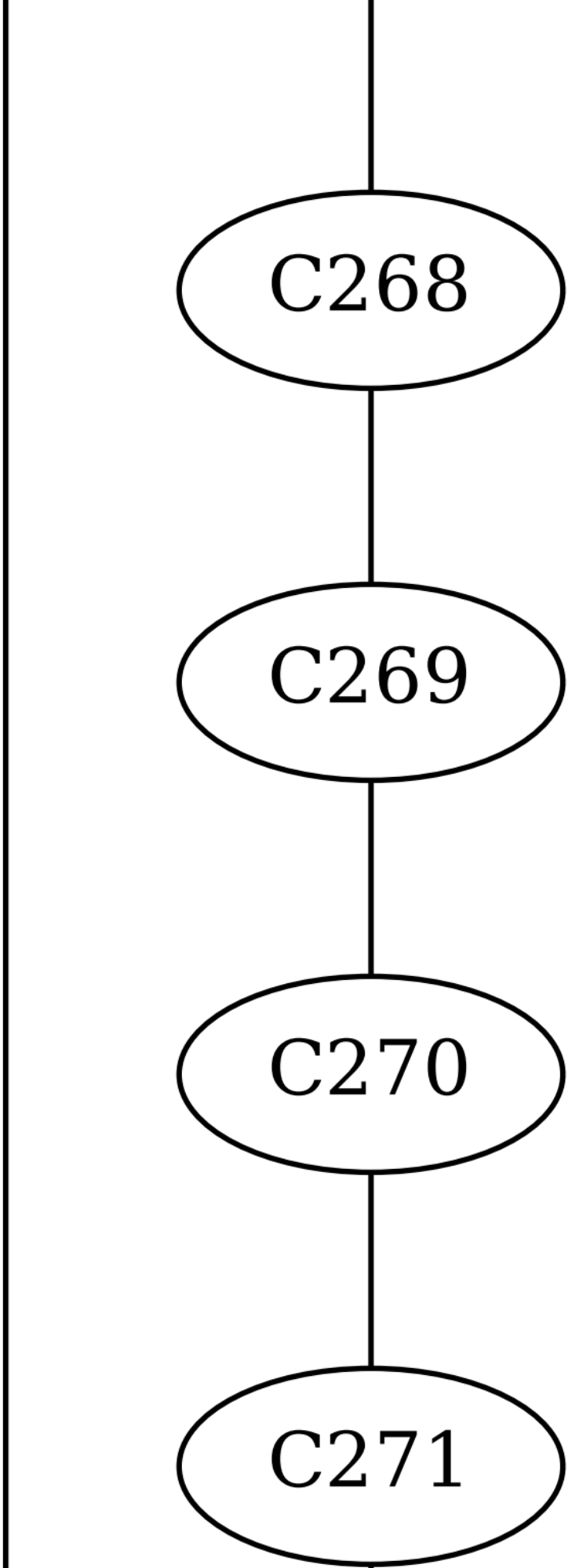
C268
C269
C270
C271

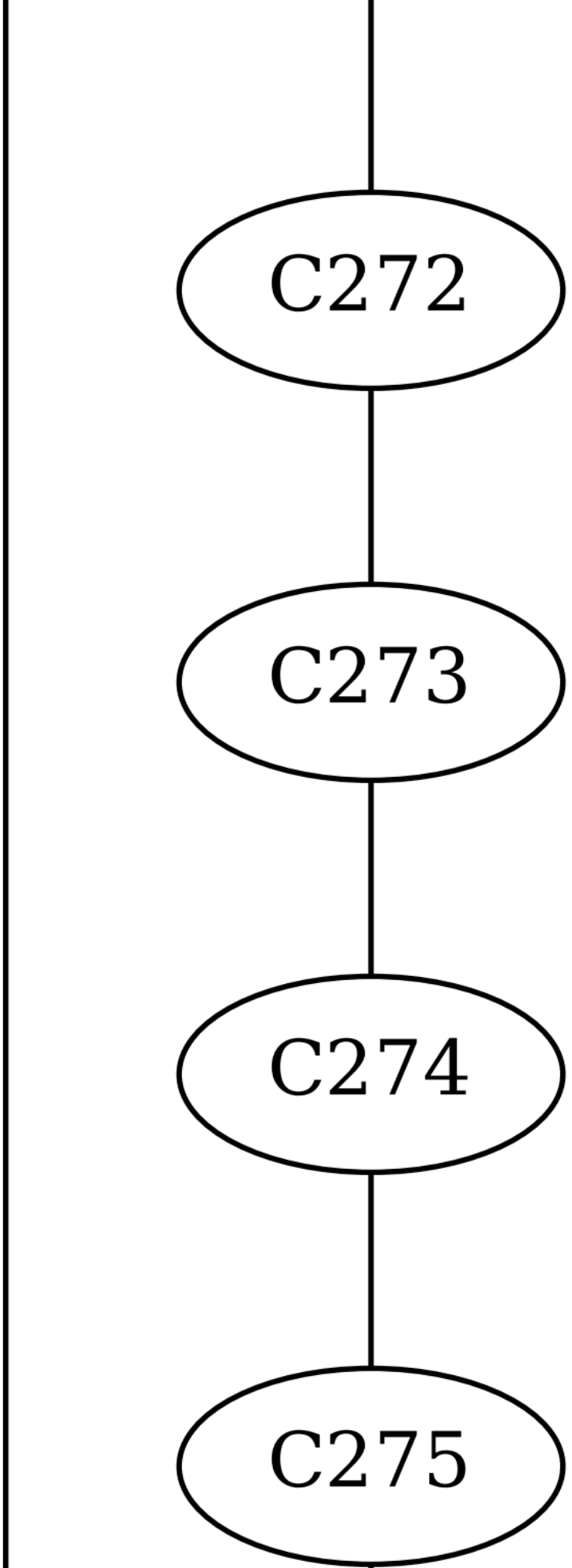
C272
C273
C274
C275

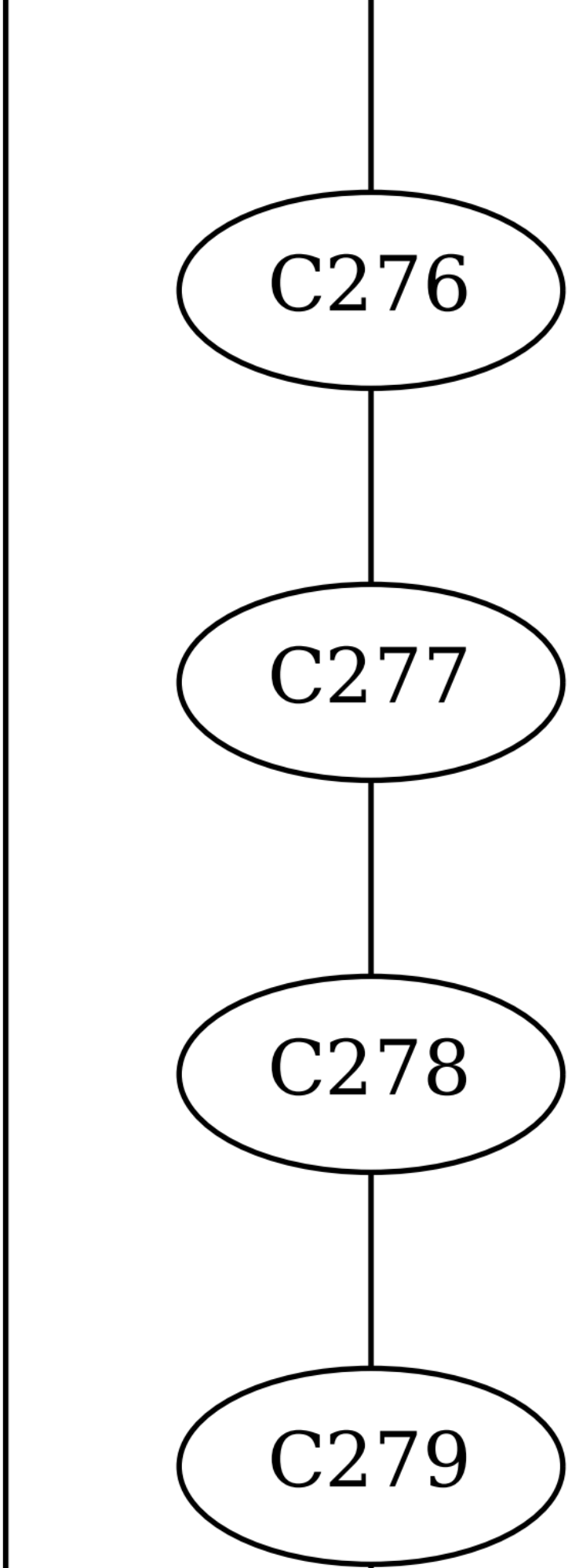
C276
C277
C278
C279

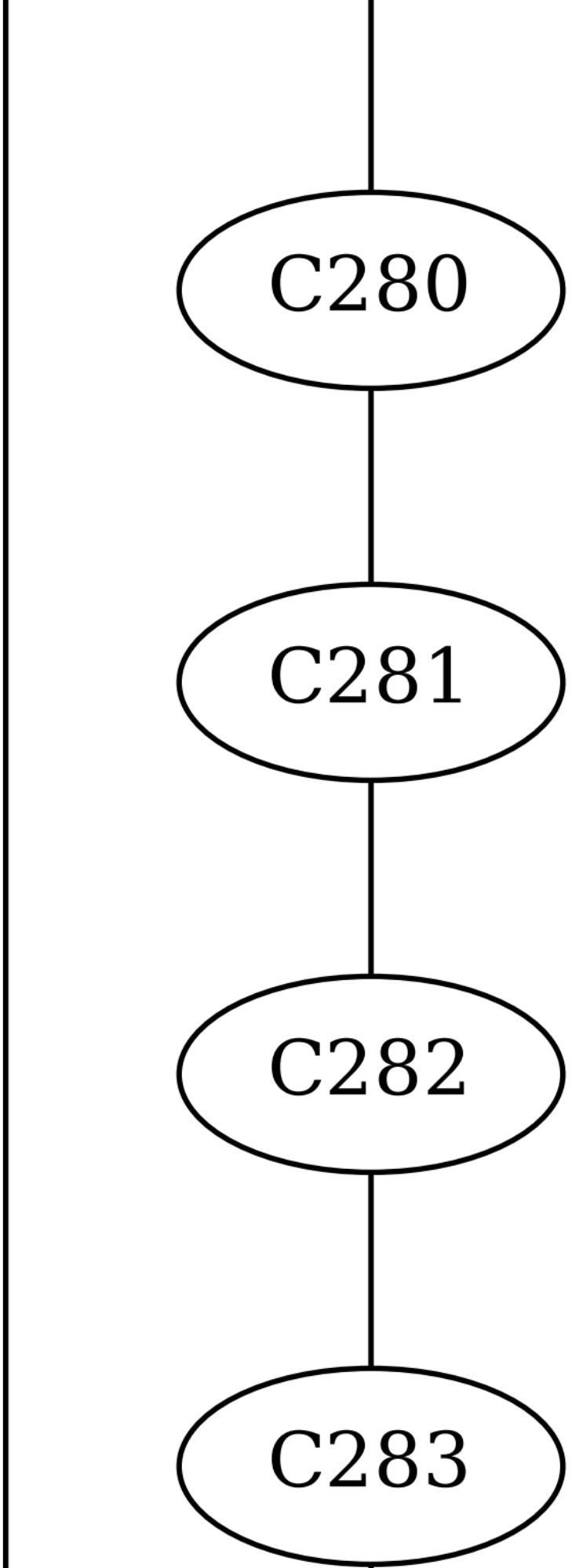
C280
C281
C282
C283

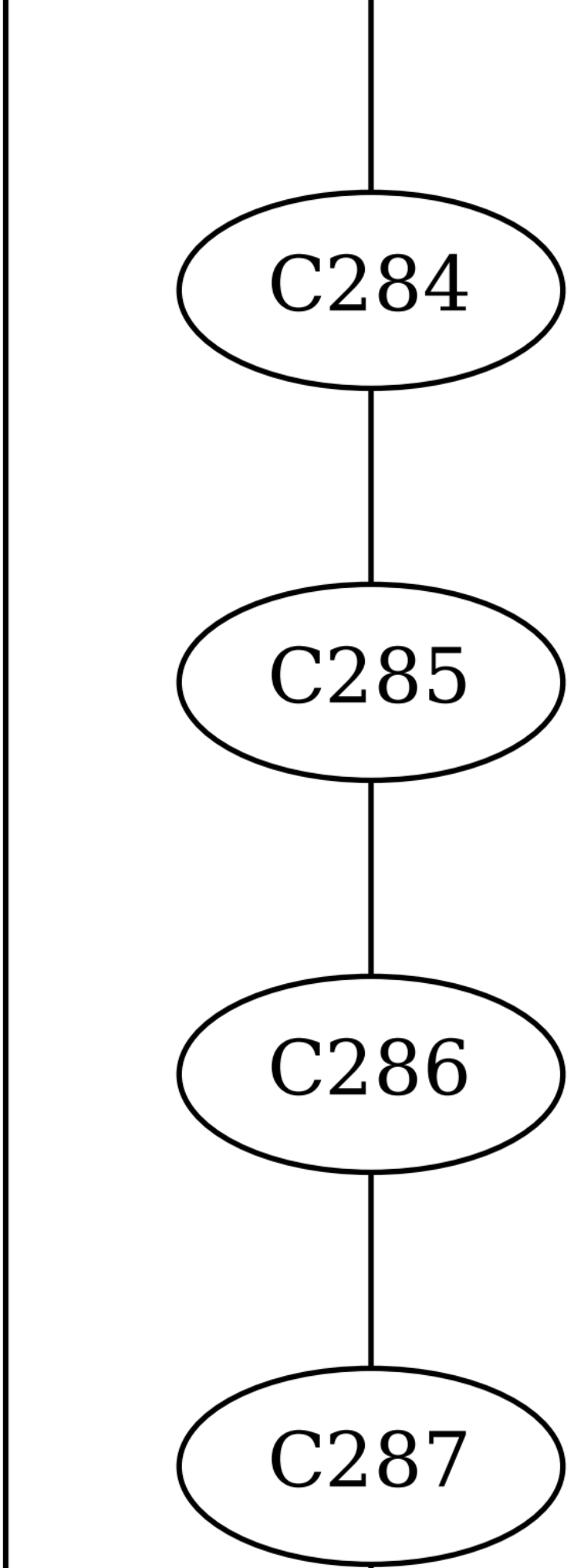
C284
C285
C286
C287

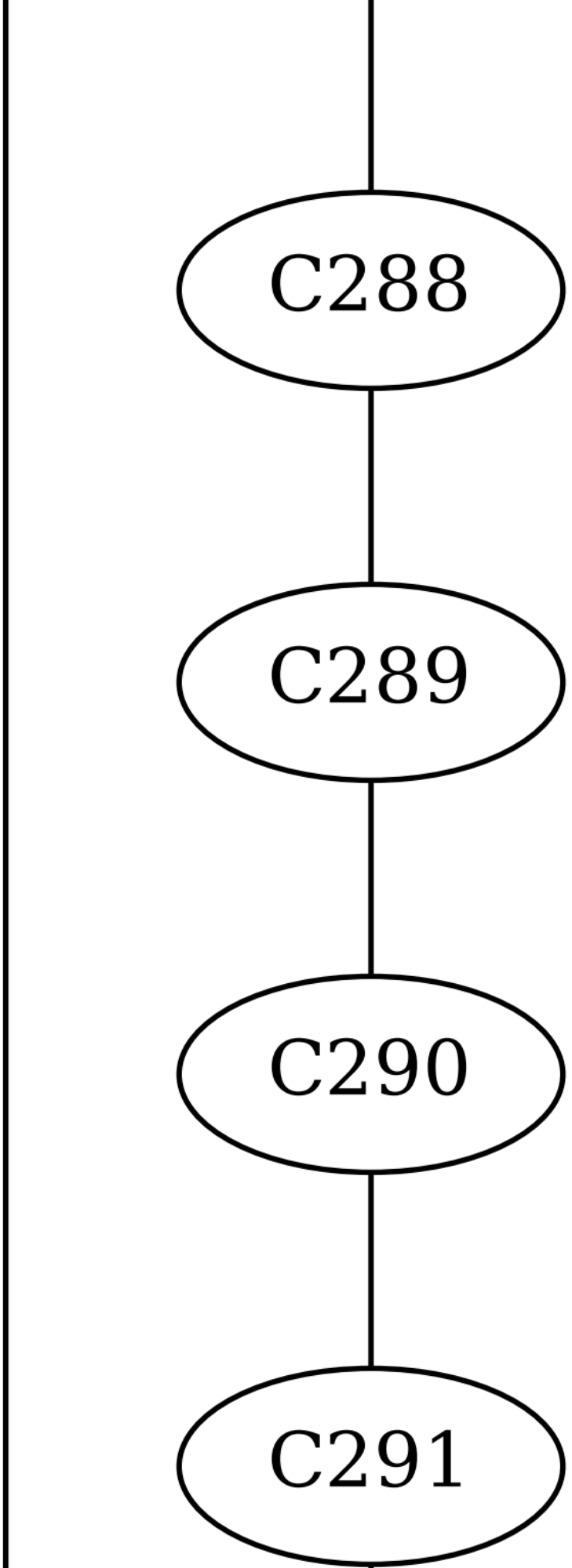
C288
C289
C290
C291

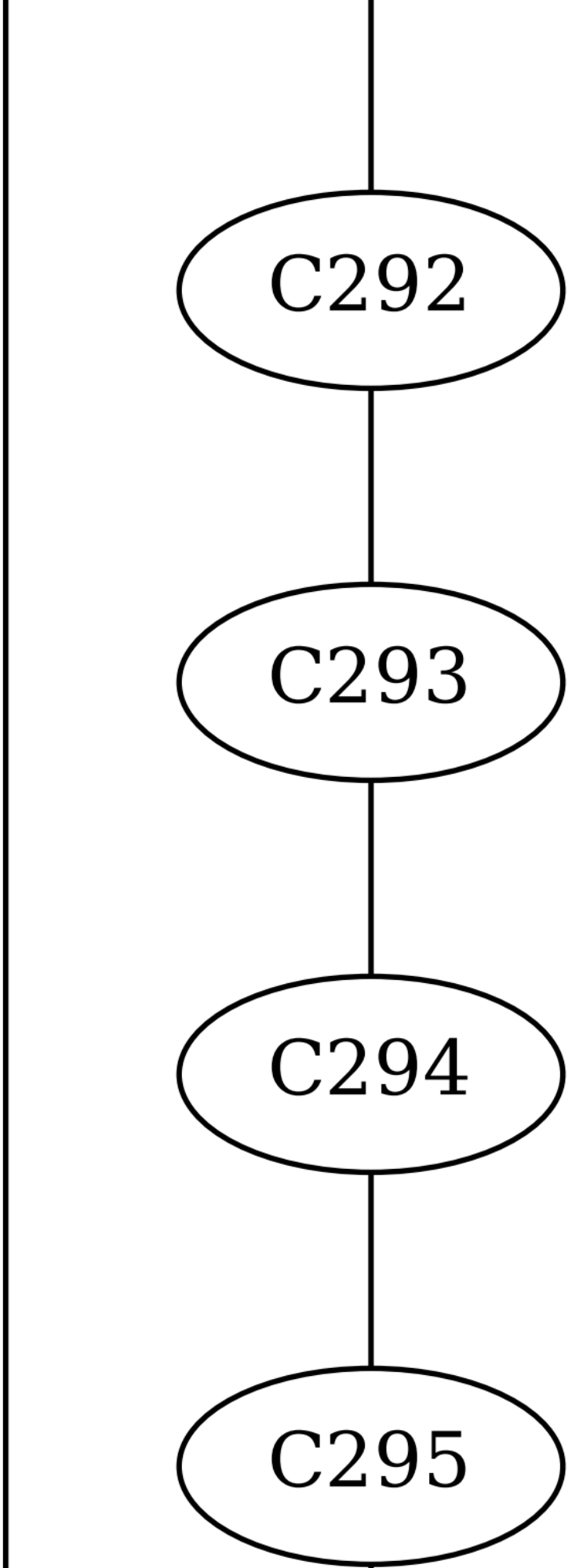
C292
C293
C294
C295

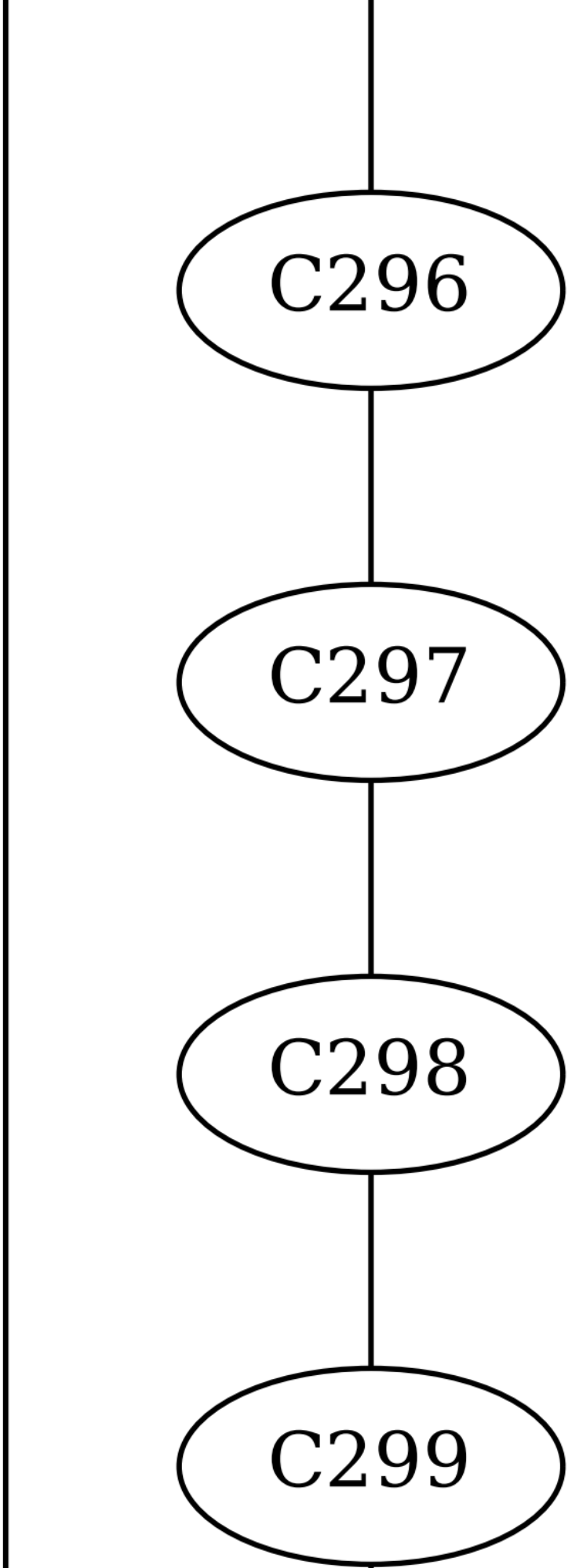
C296
C297
C298
C299

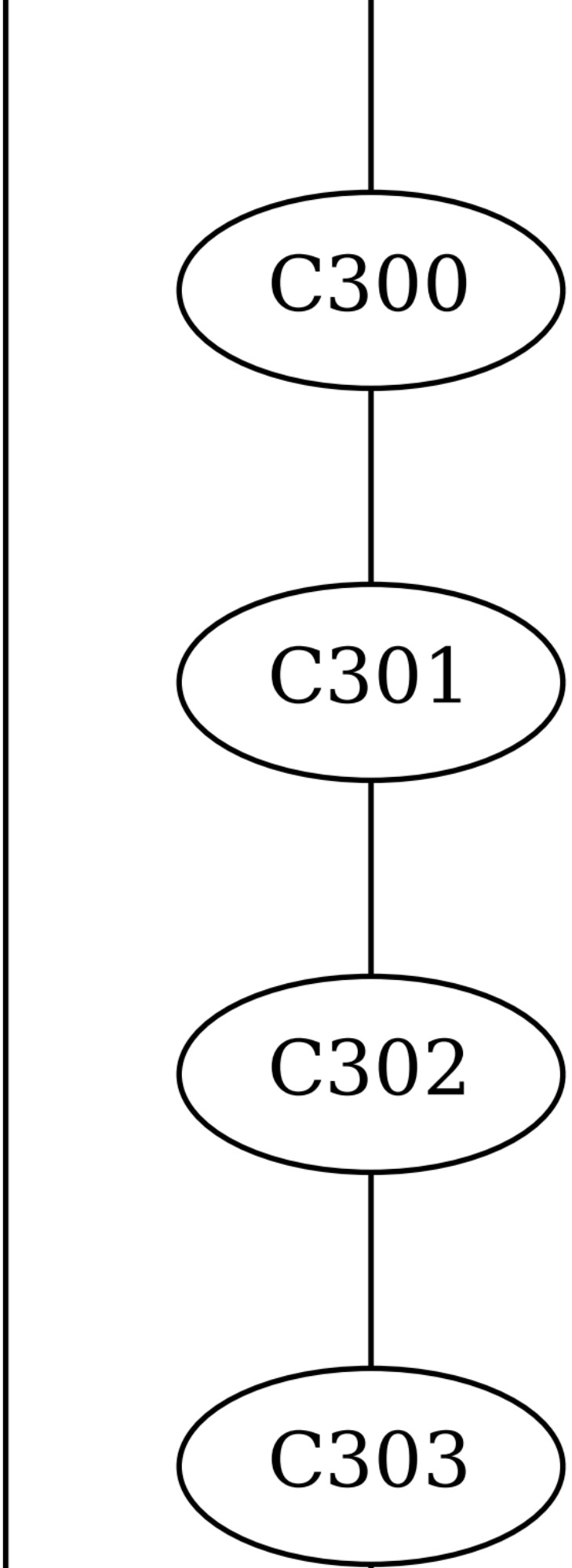
C300
C301
C302
C303

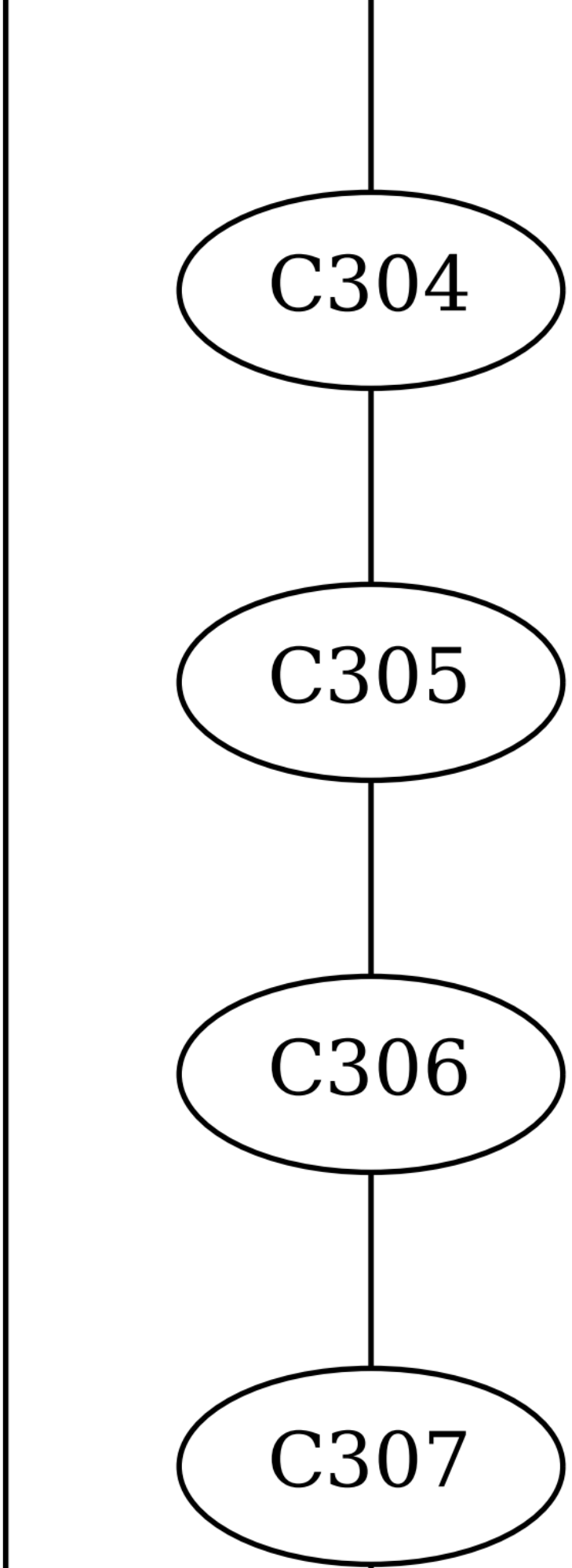
C304
C305
C306
C307

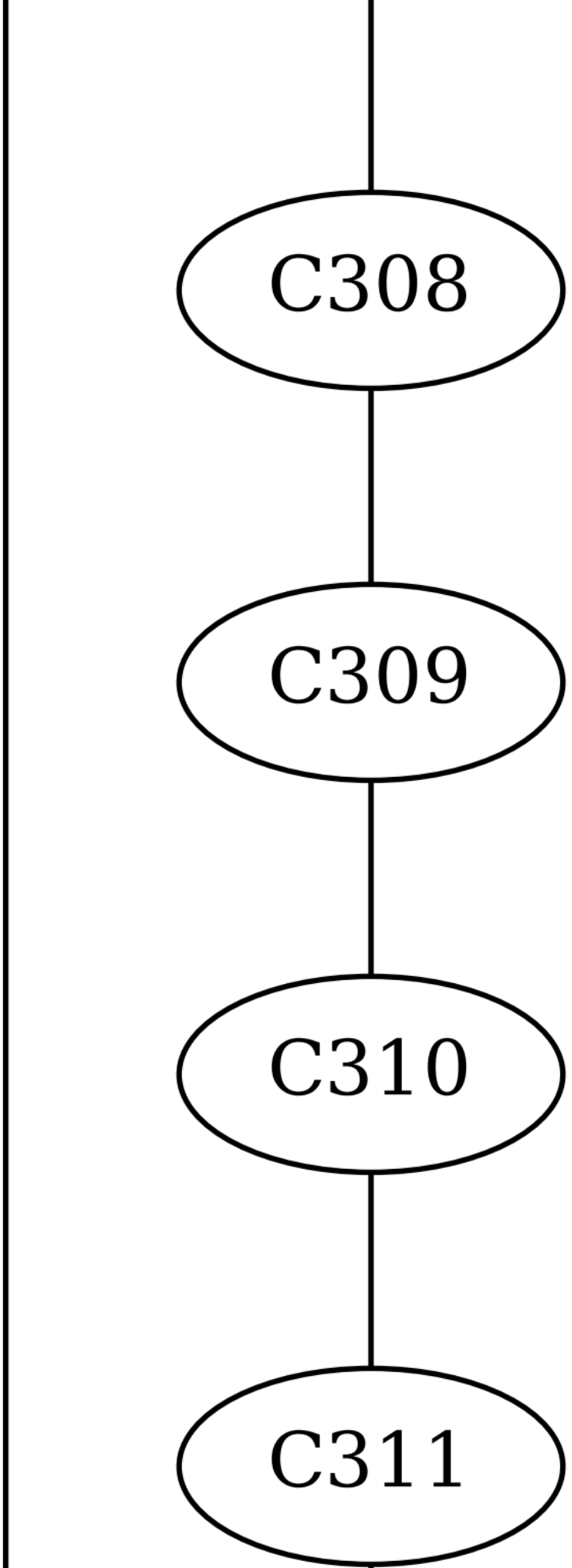
C308
C309
C310
C311

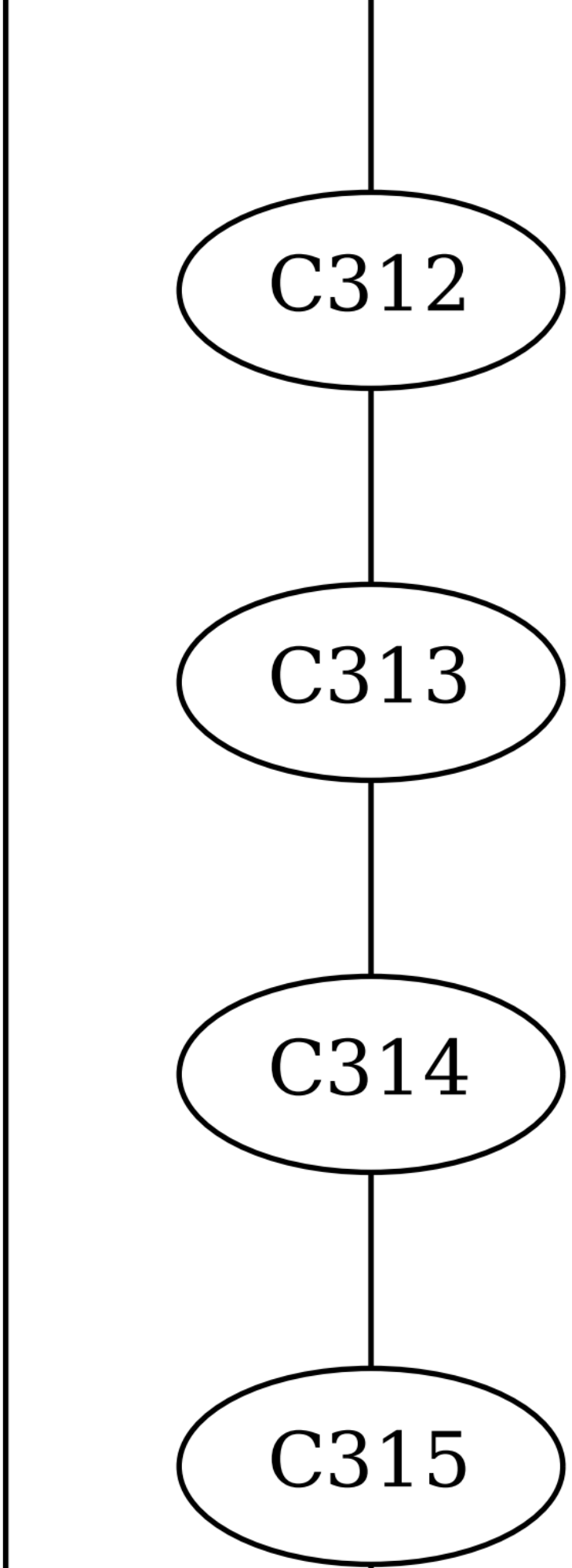
C312
C313
C314
C315

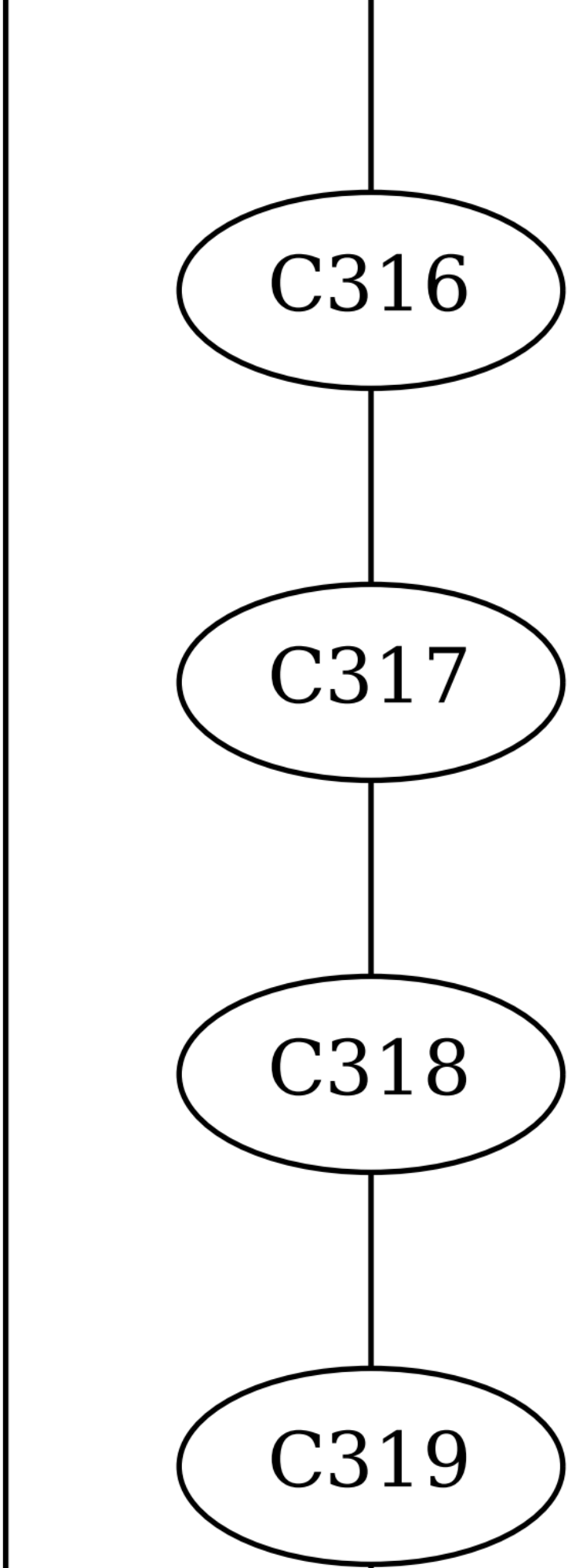
C316
C317
C318
C319

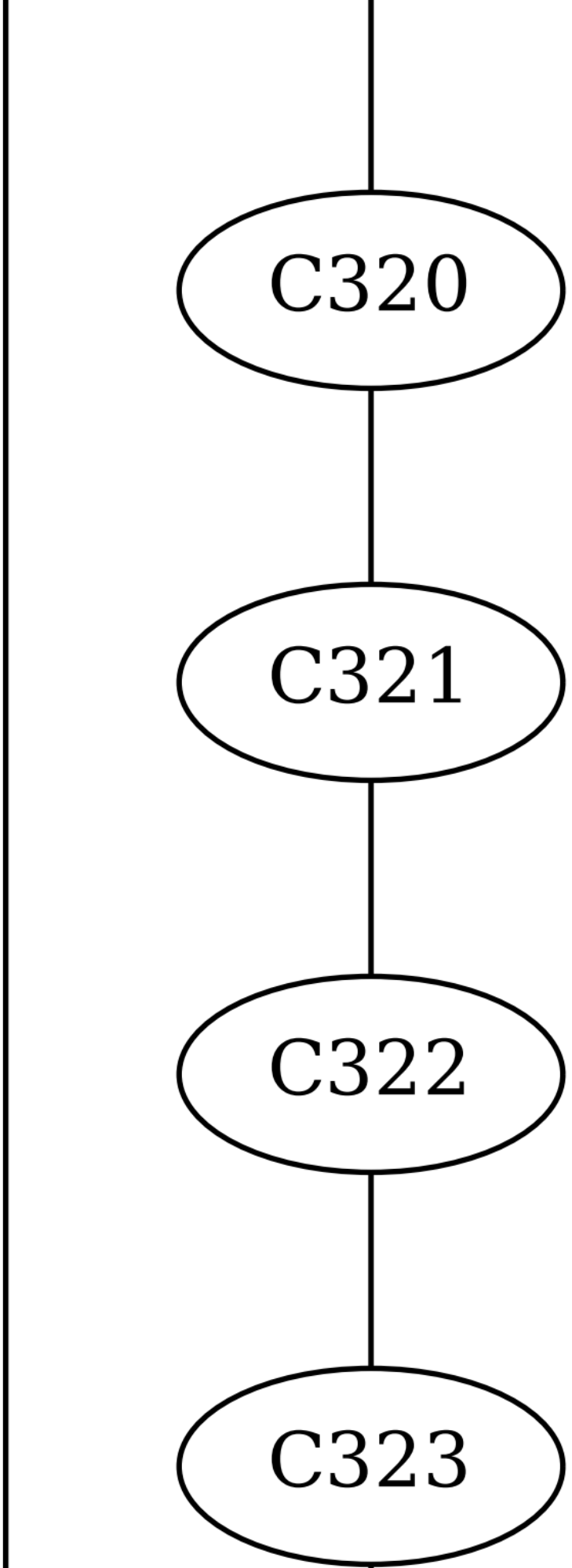
C320
C321
C322
C323

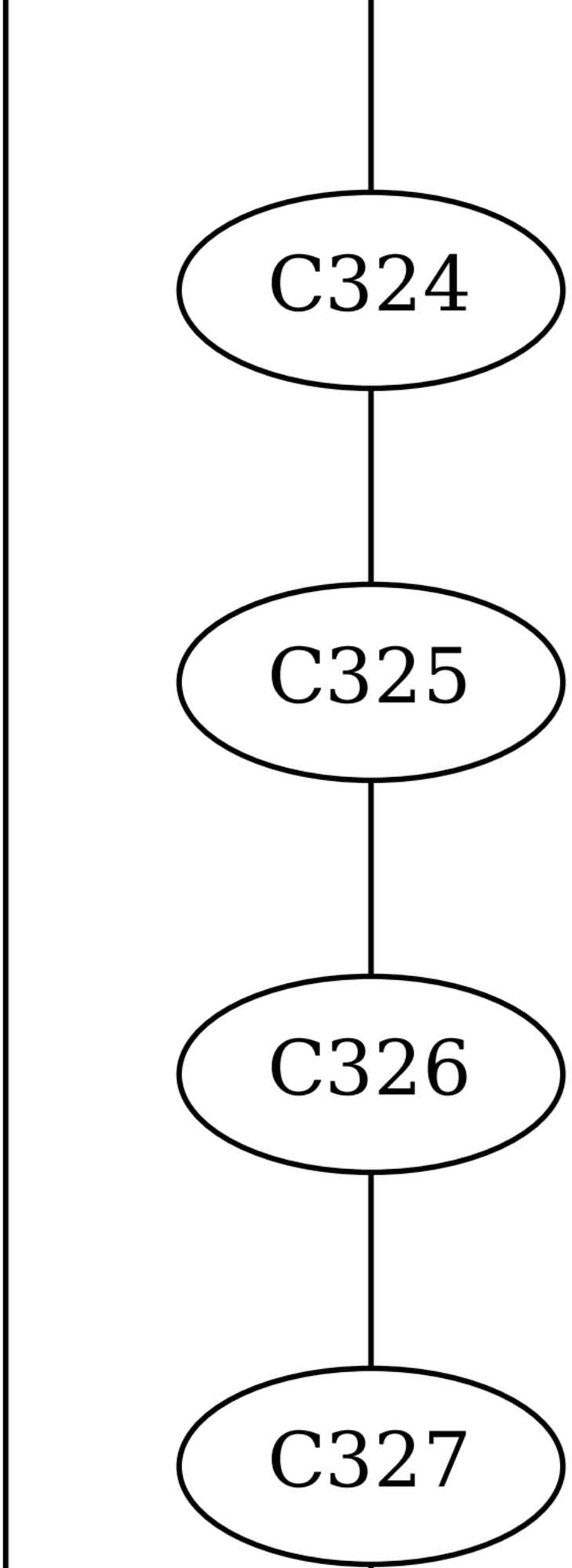
C324
C325
C326
C327

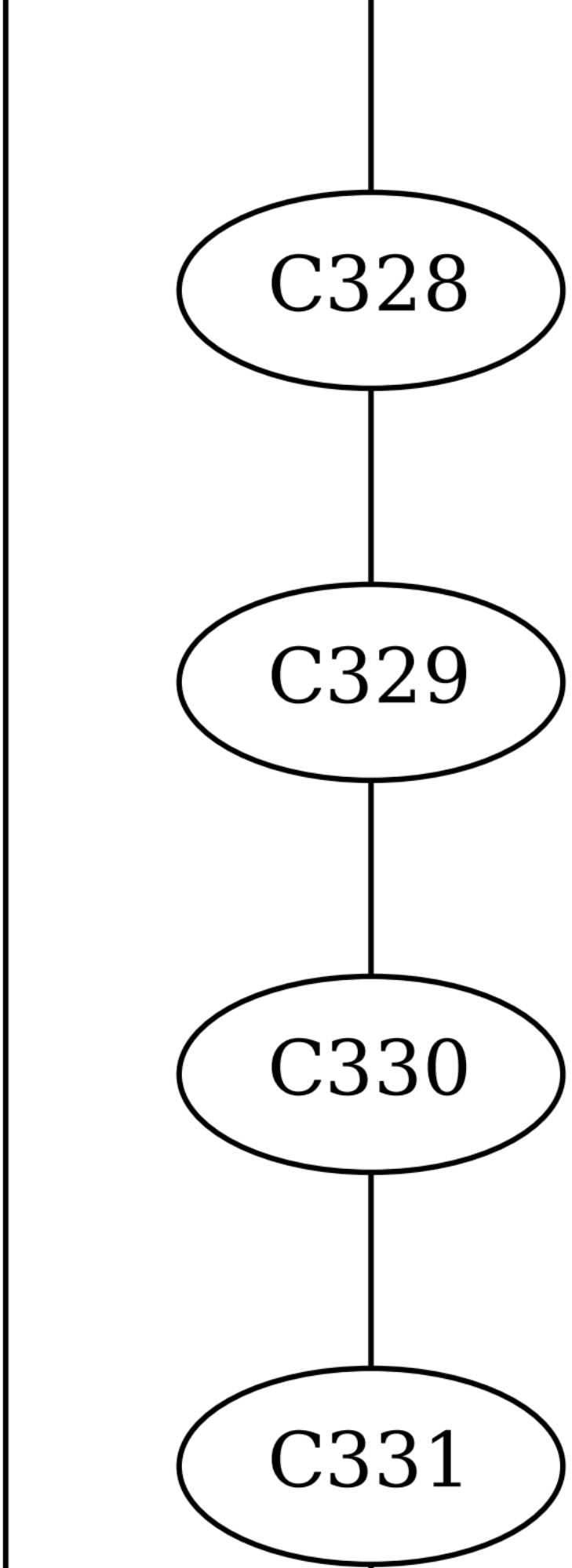
C328
C329
C330
C331

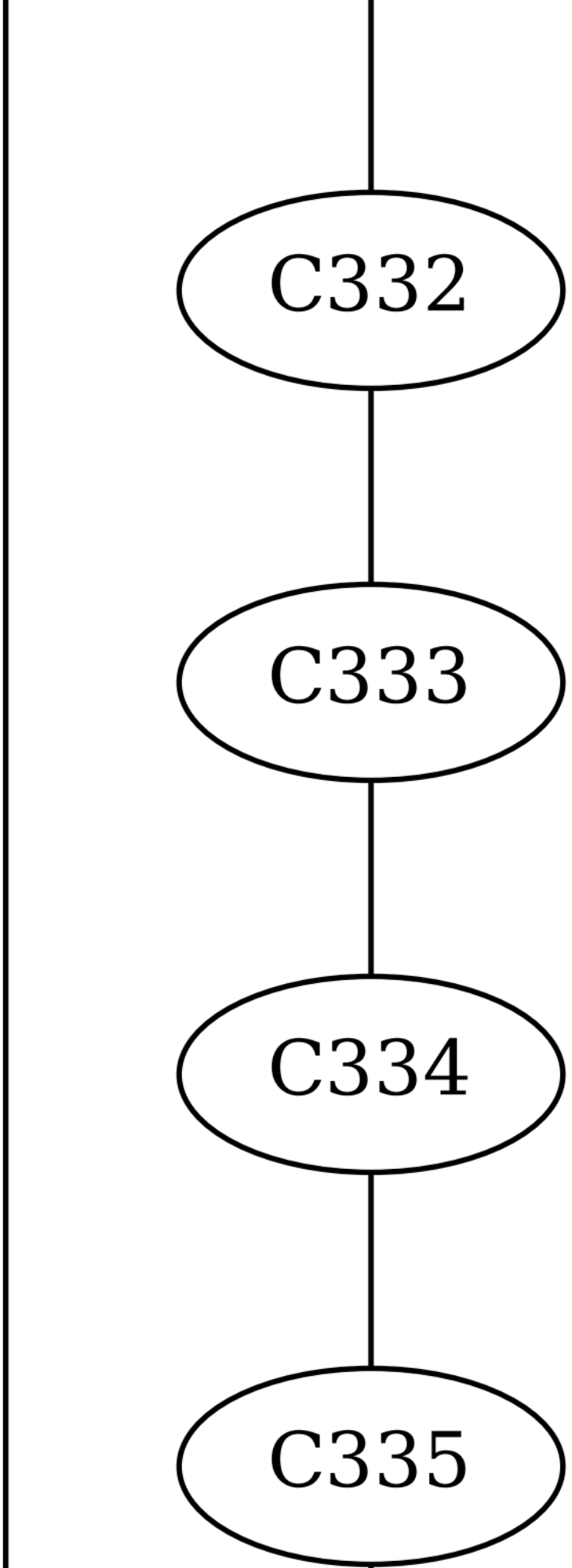
C332
C333
C334
C335

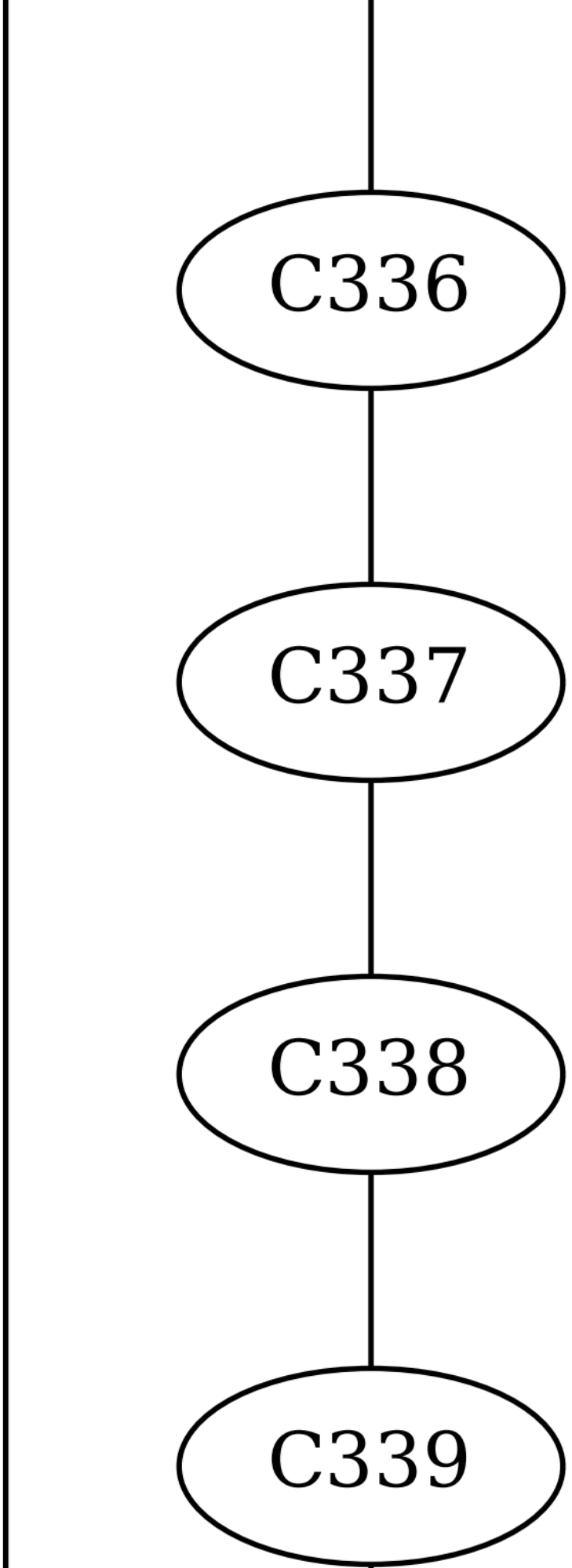
C336
C337
C338
C339

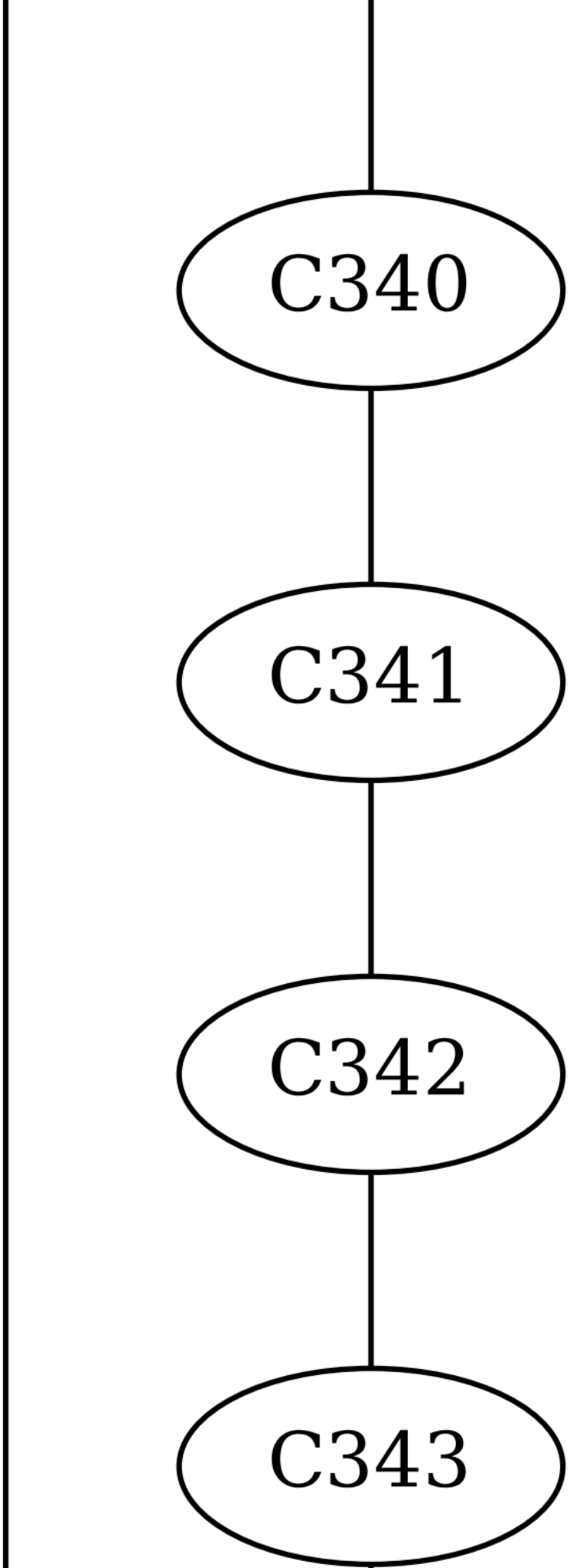
C340
C341
C342
C343

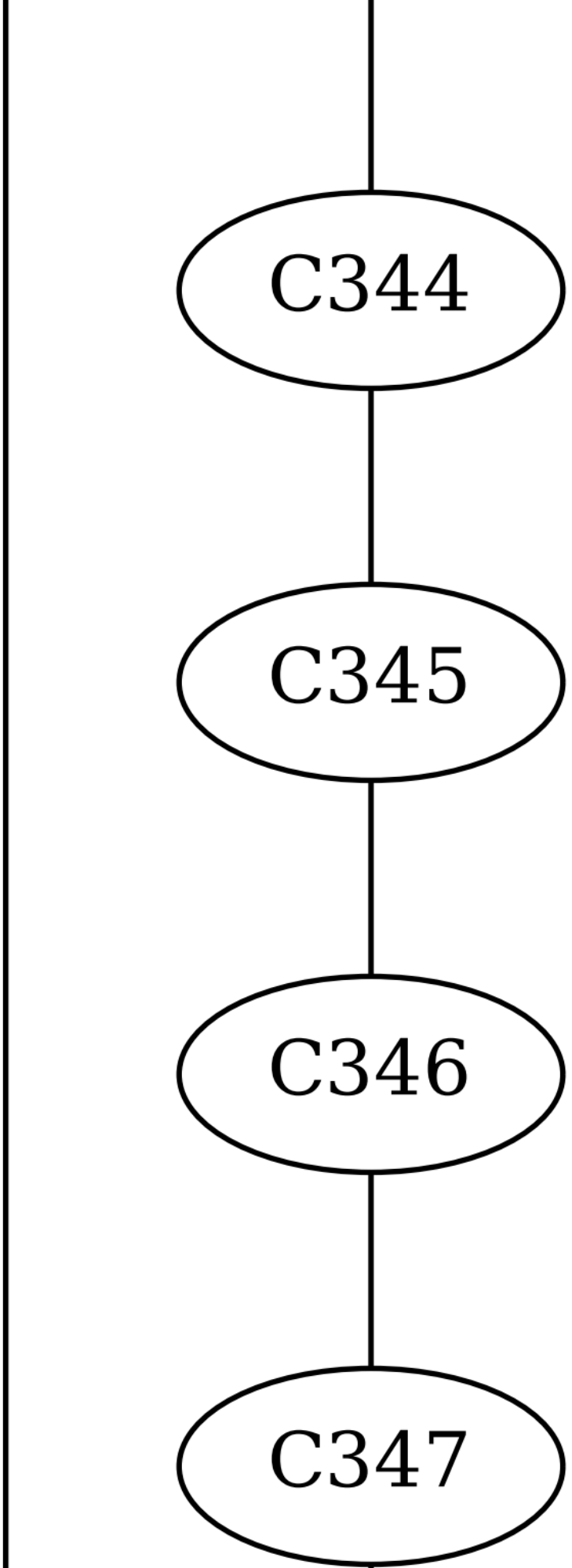
C344
C345
C346
C347

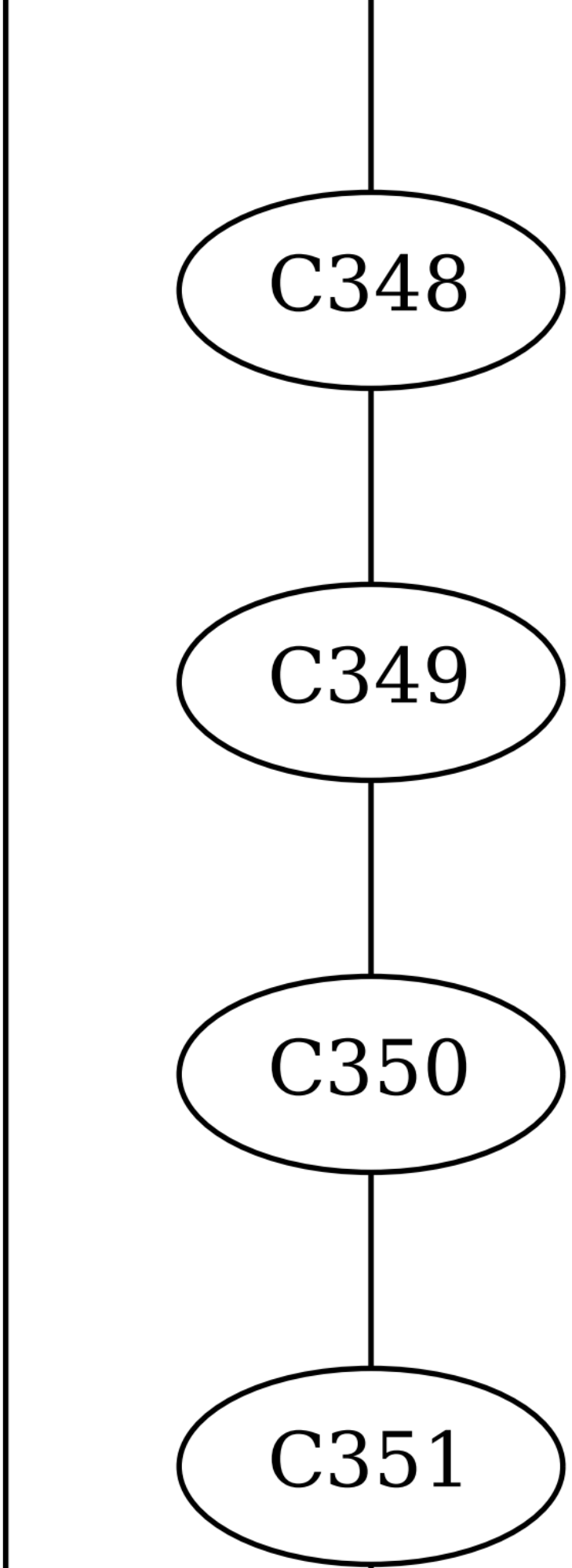
C348
C349
C350
C351

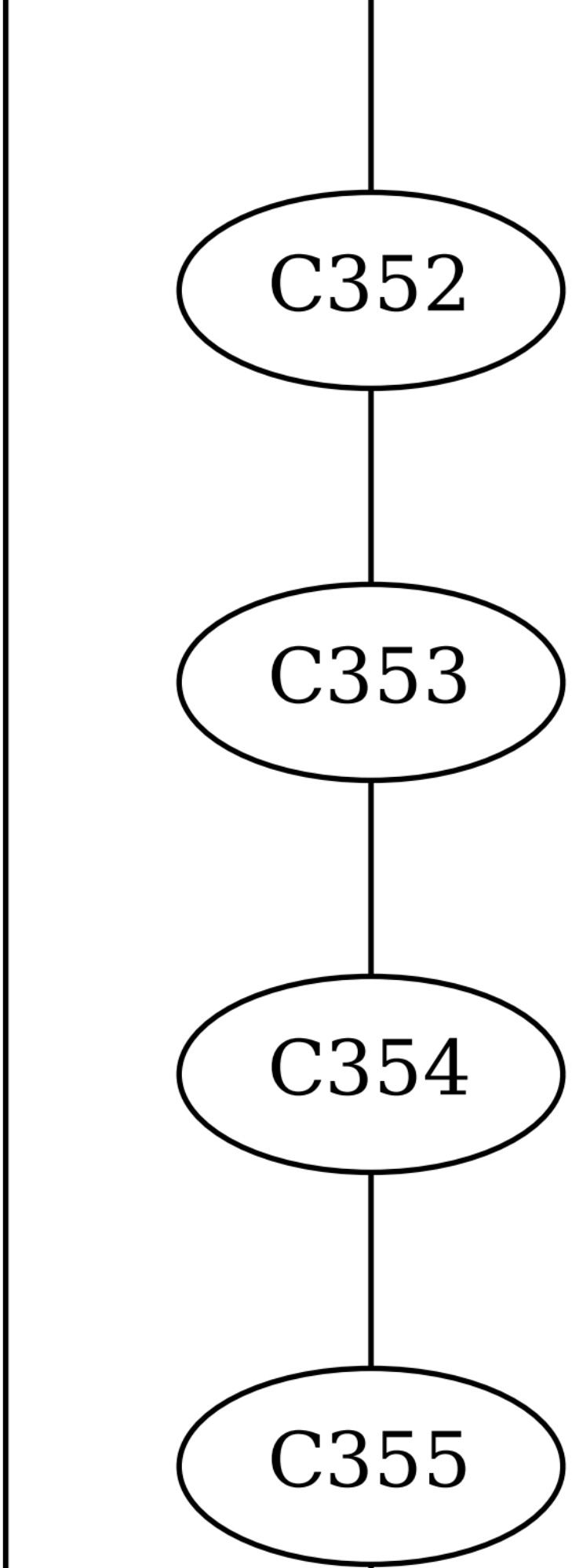
C352
C353
C354
C355

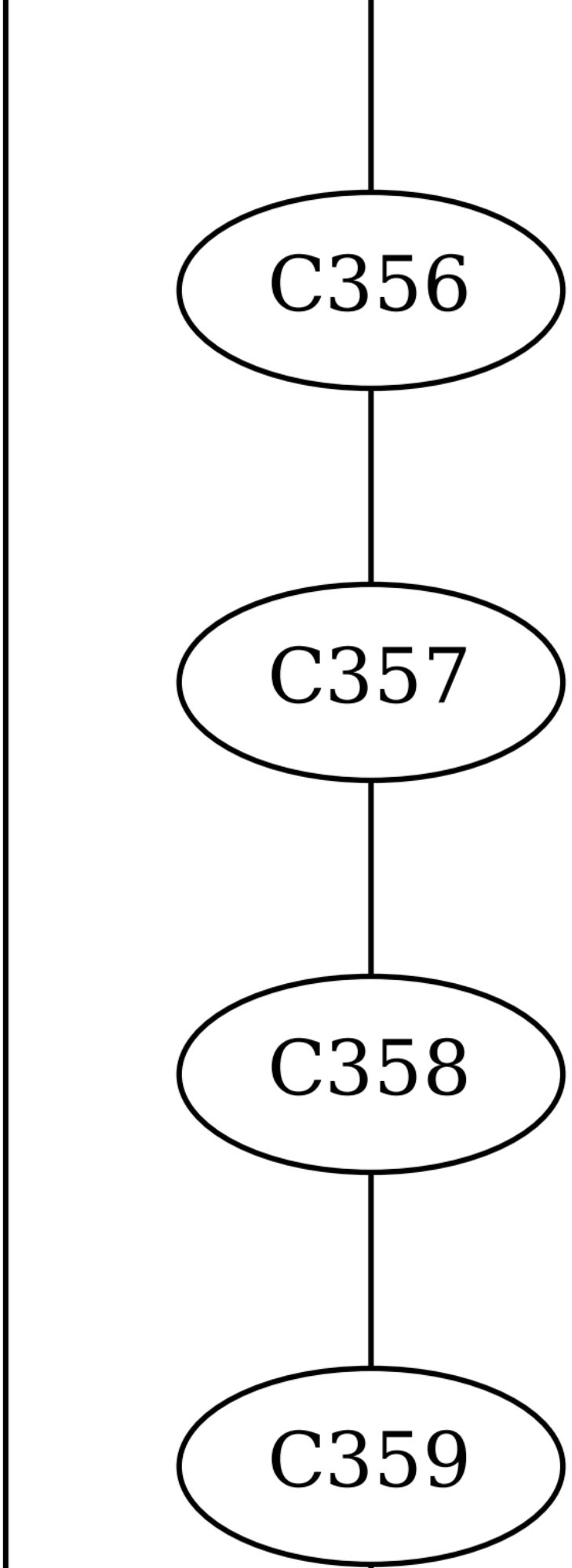
C356
C357
C358
C359

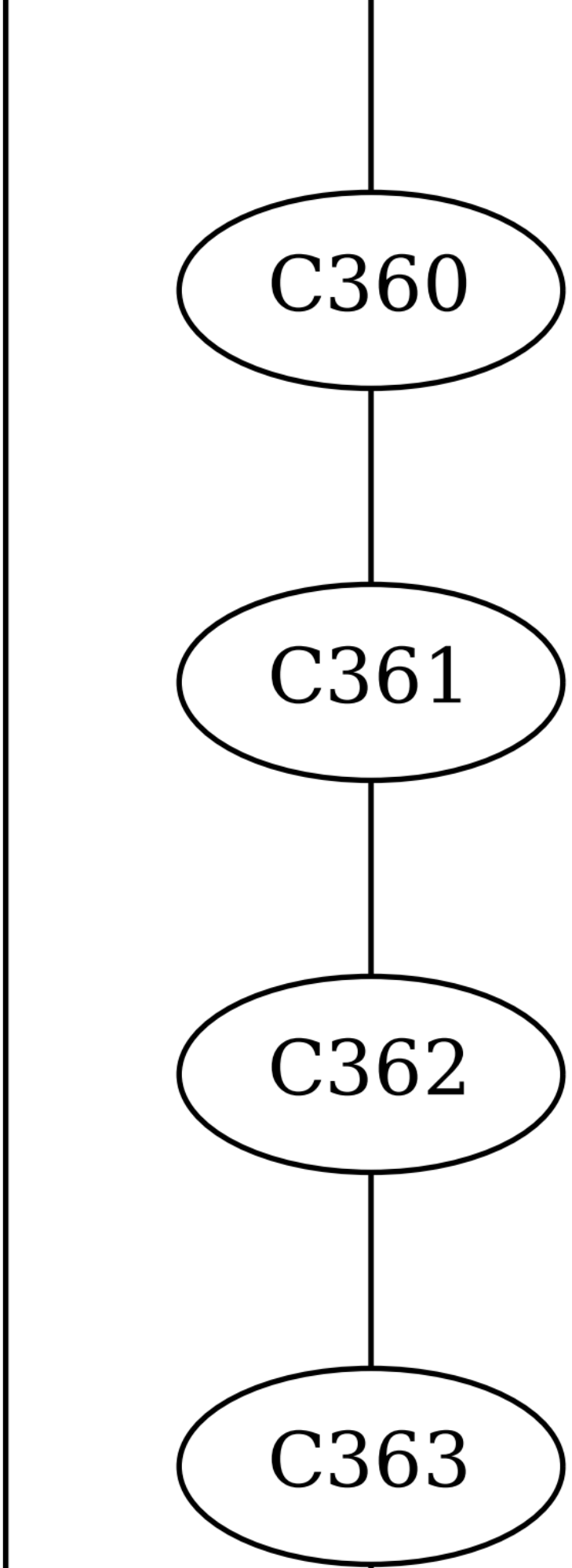
C360
C361
C362
C363

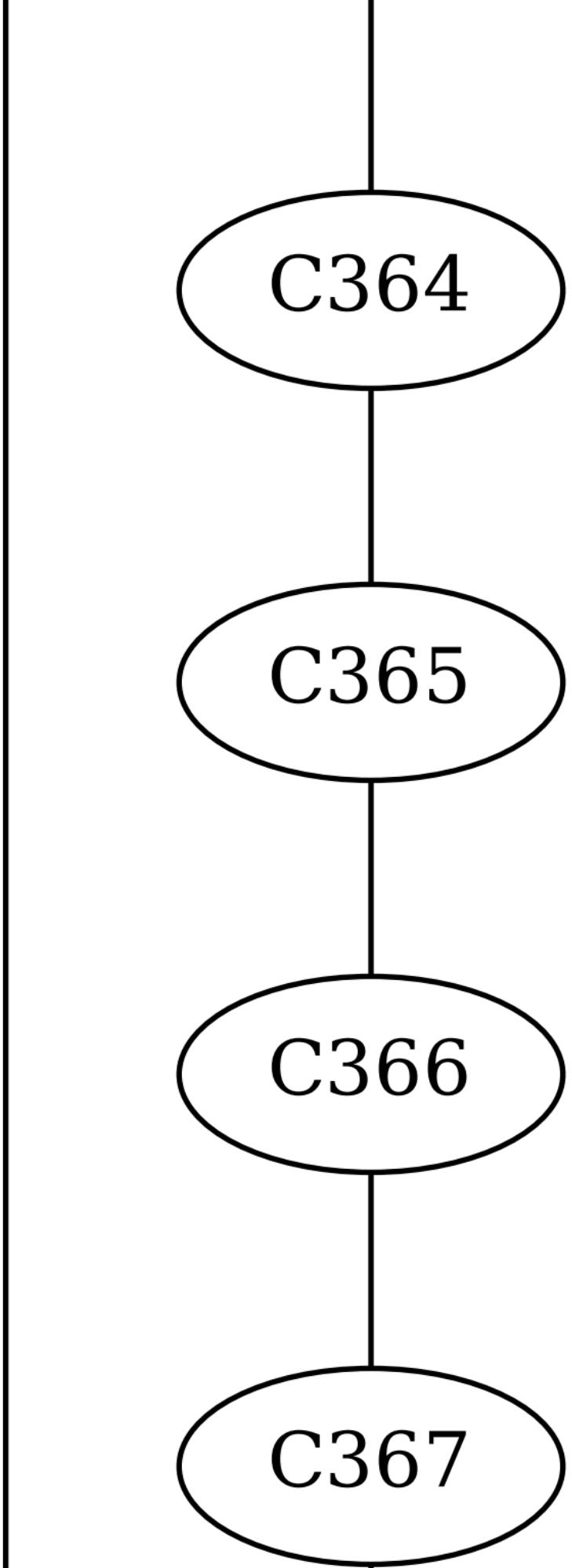
C364
C365
C366
C367

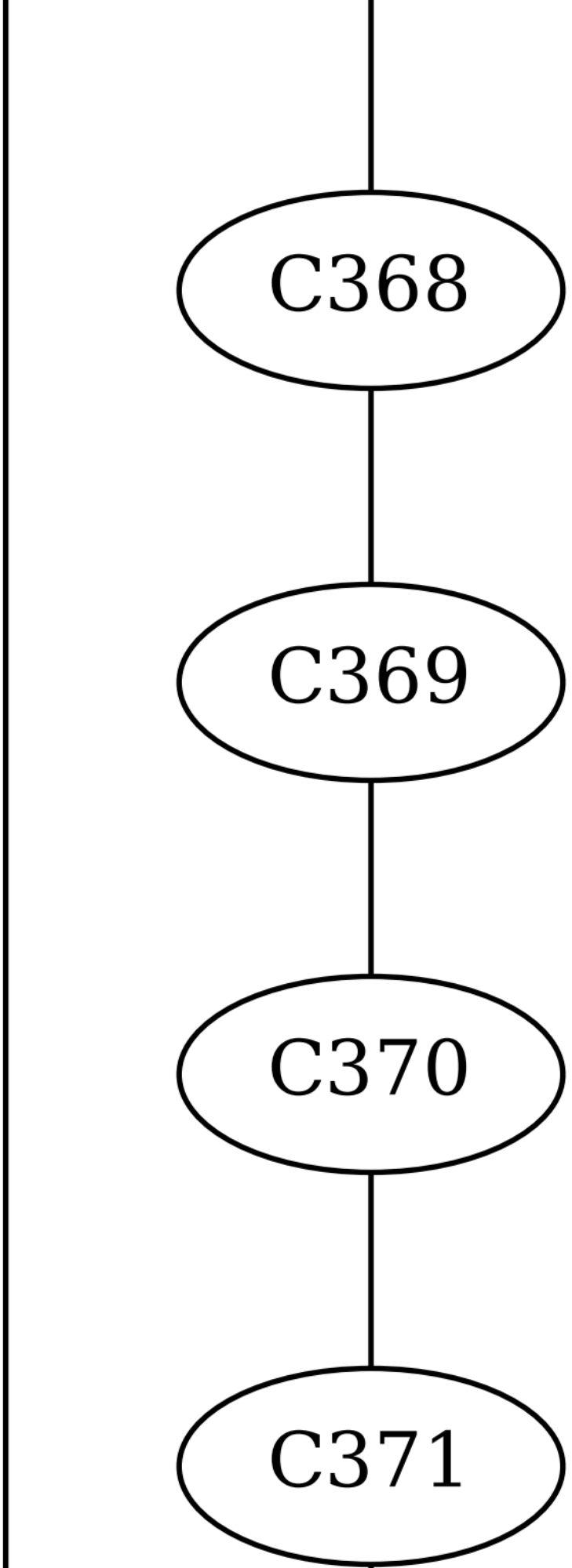
C368
C369
C370
C371

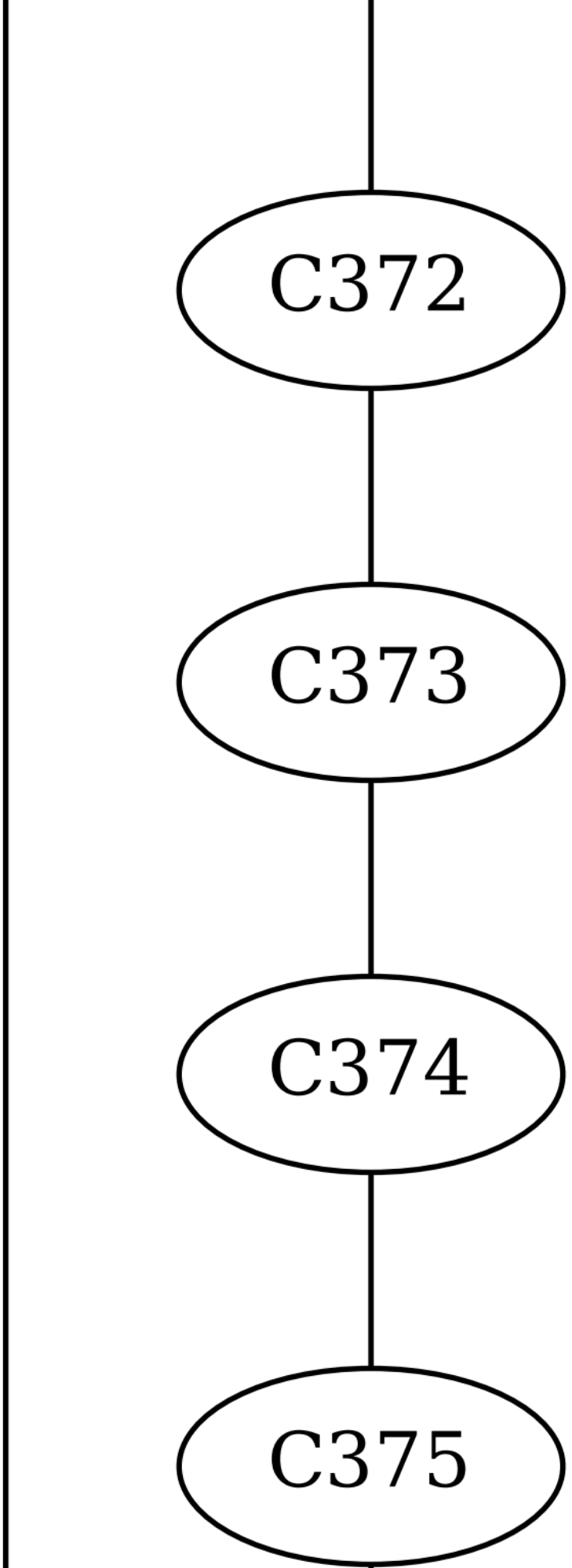
C372
C373
C374
C375

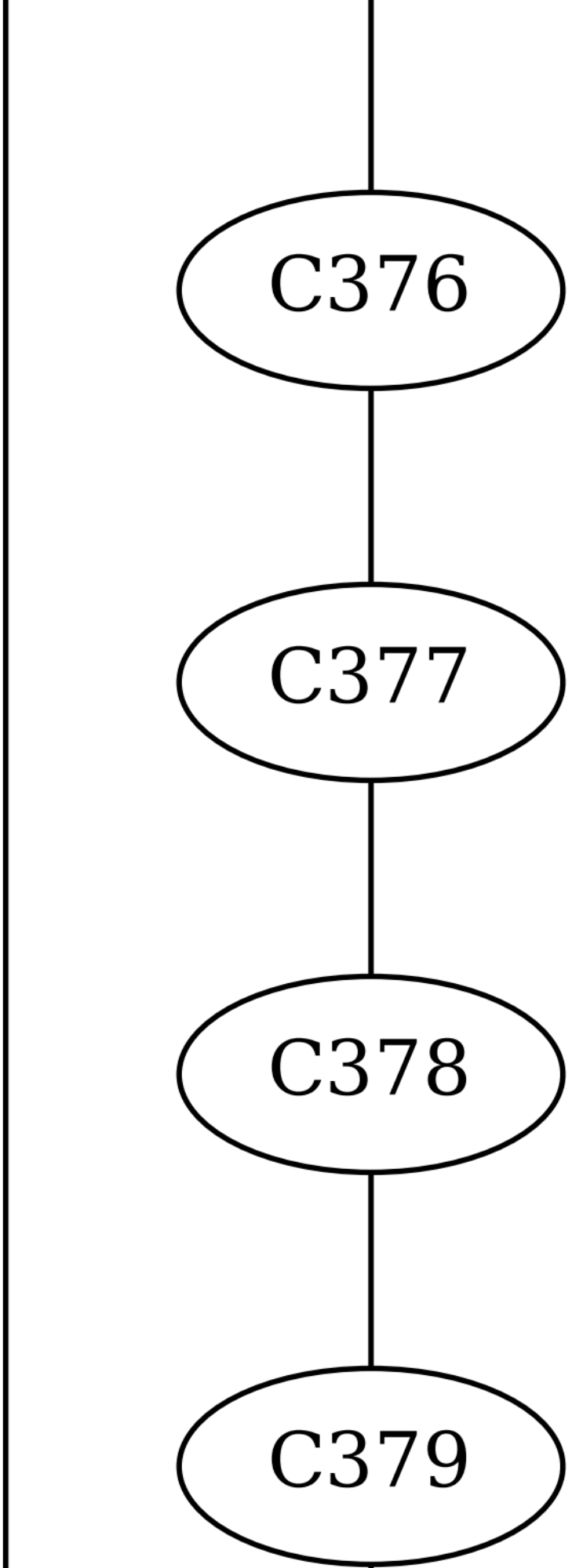
C376
C377
C378
C379

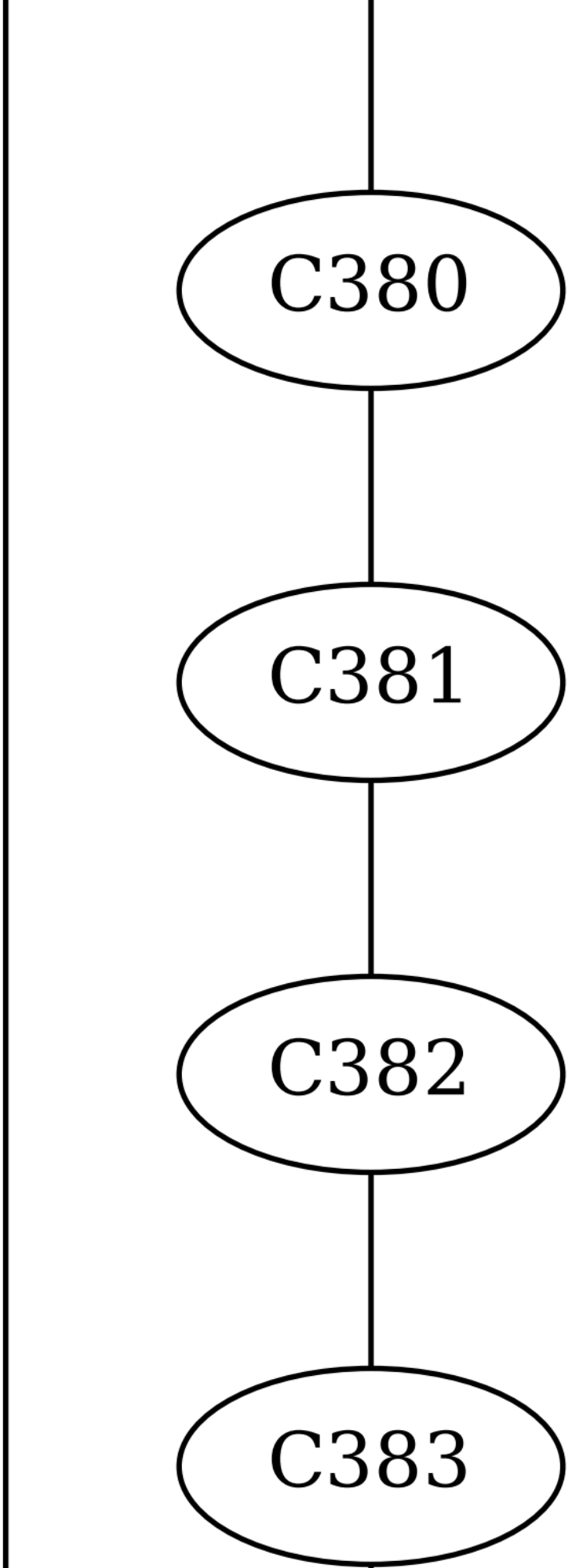
C380
C381
C382
C383

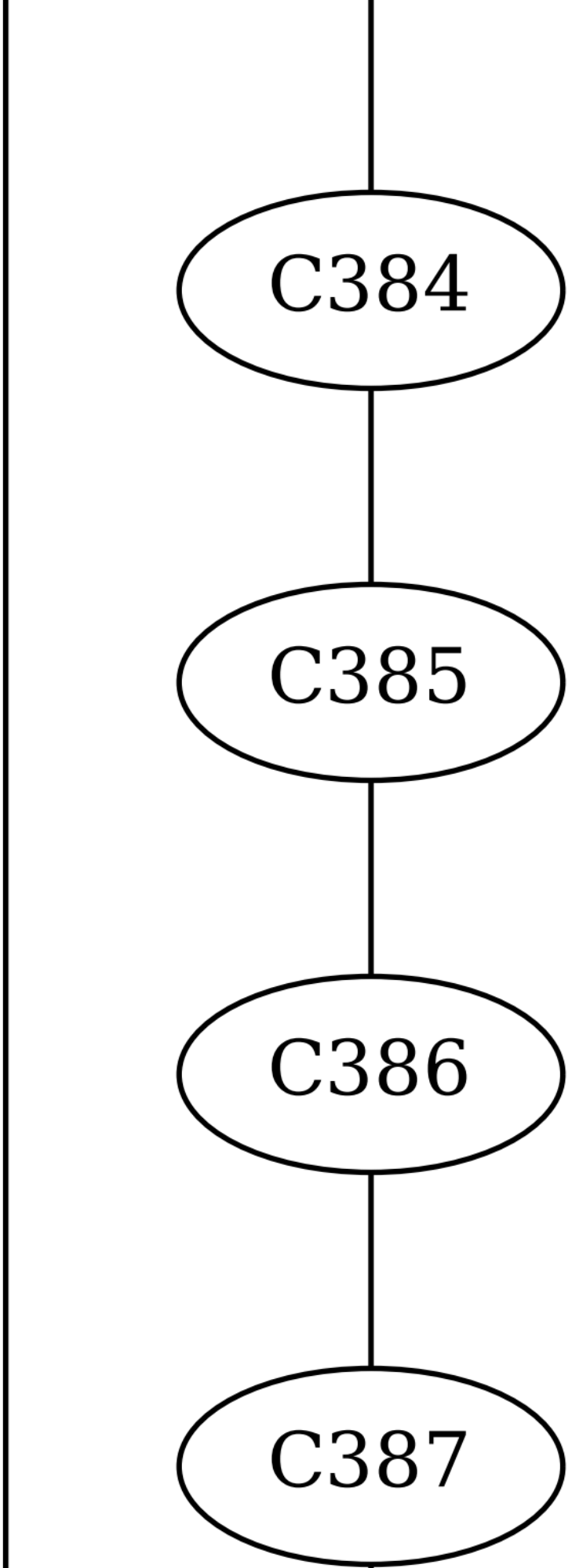
C384
C385
C386
C387

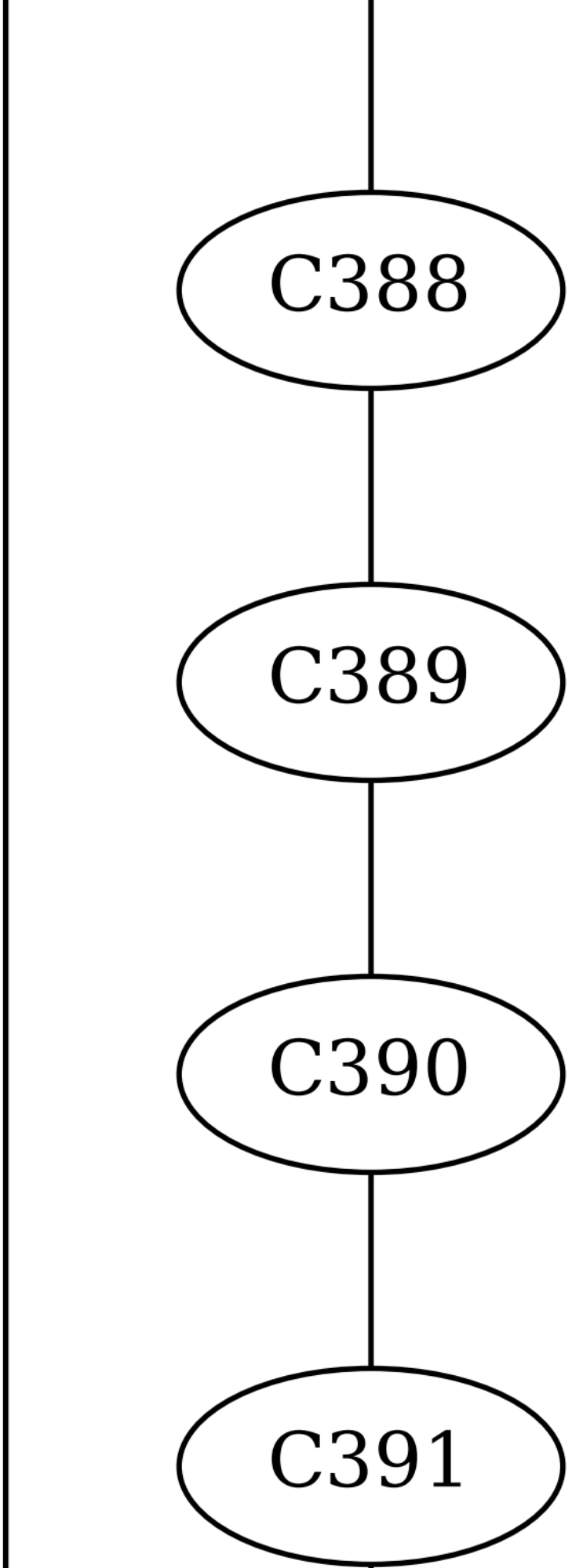
C388
C389
C390
C391

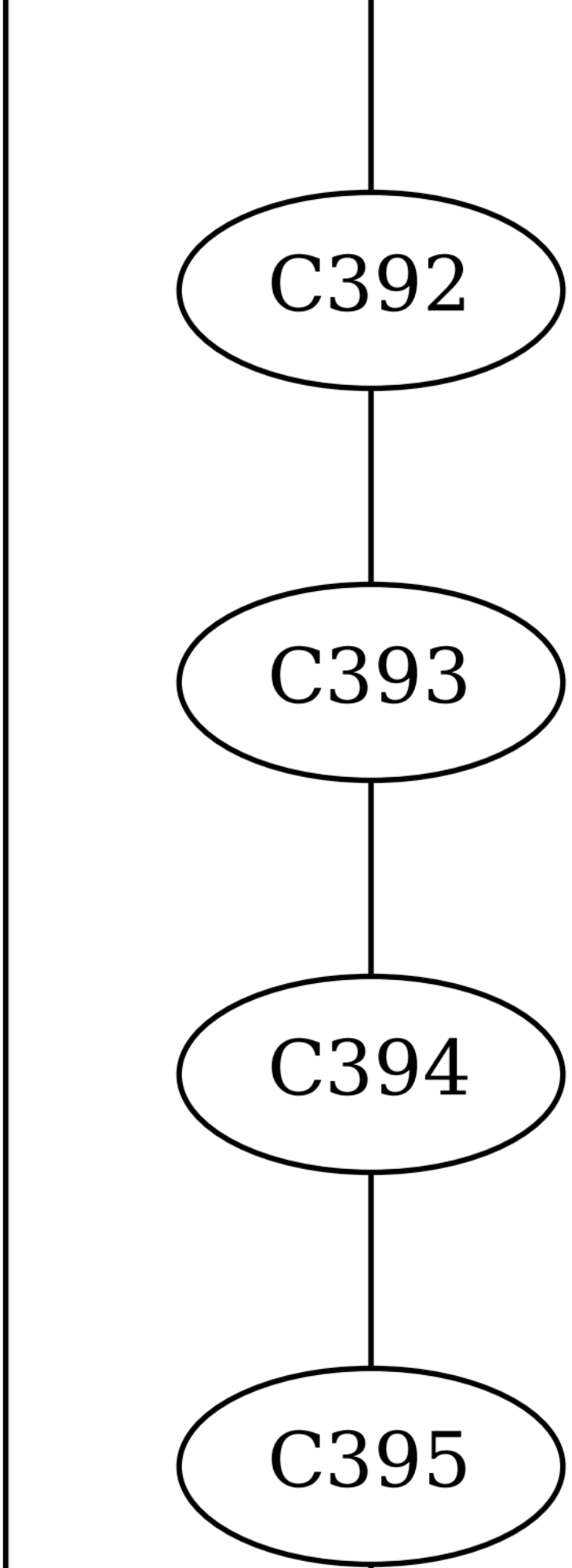
C392
C393
C394
C395

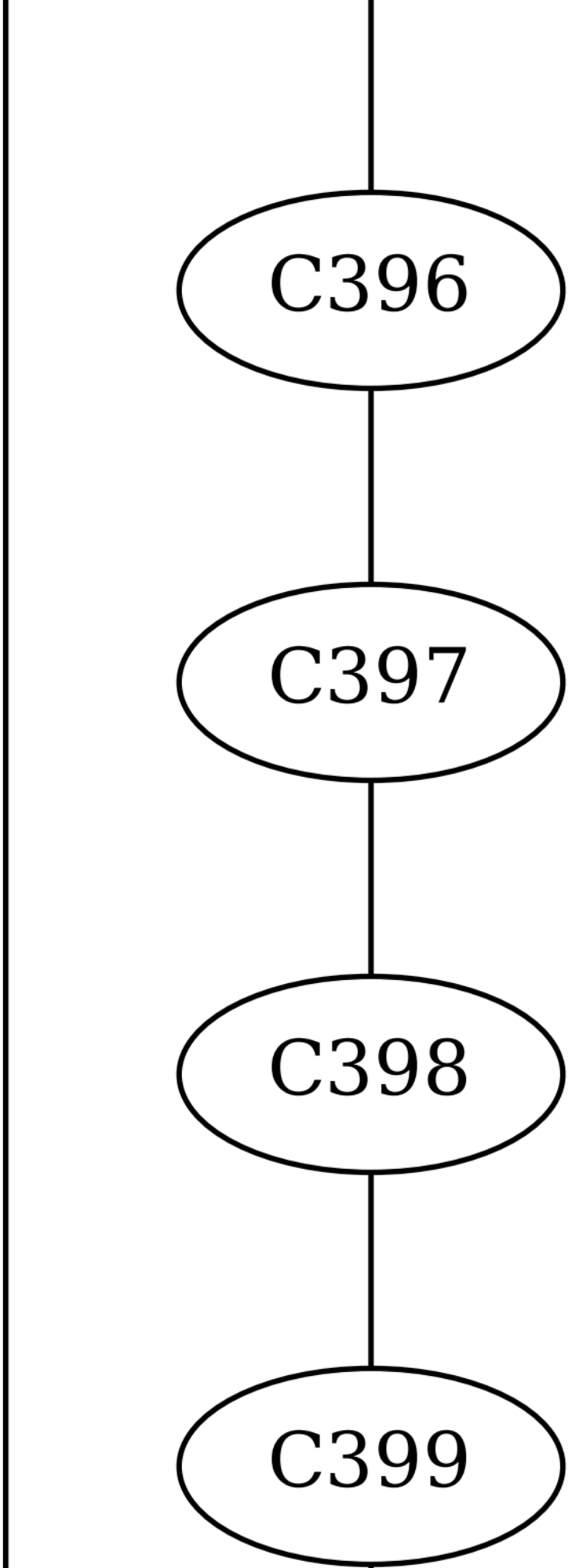
C396
C397
C398
C399

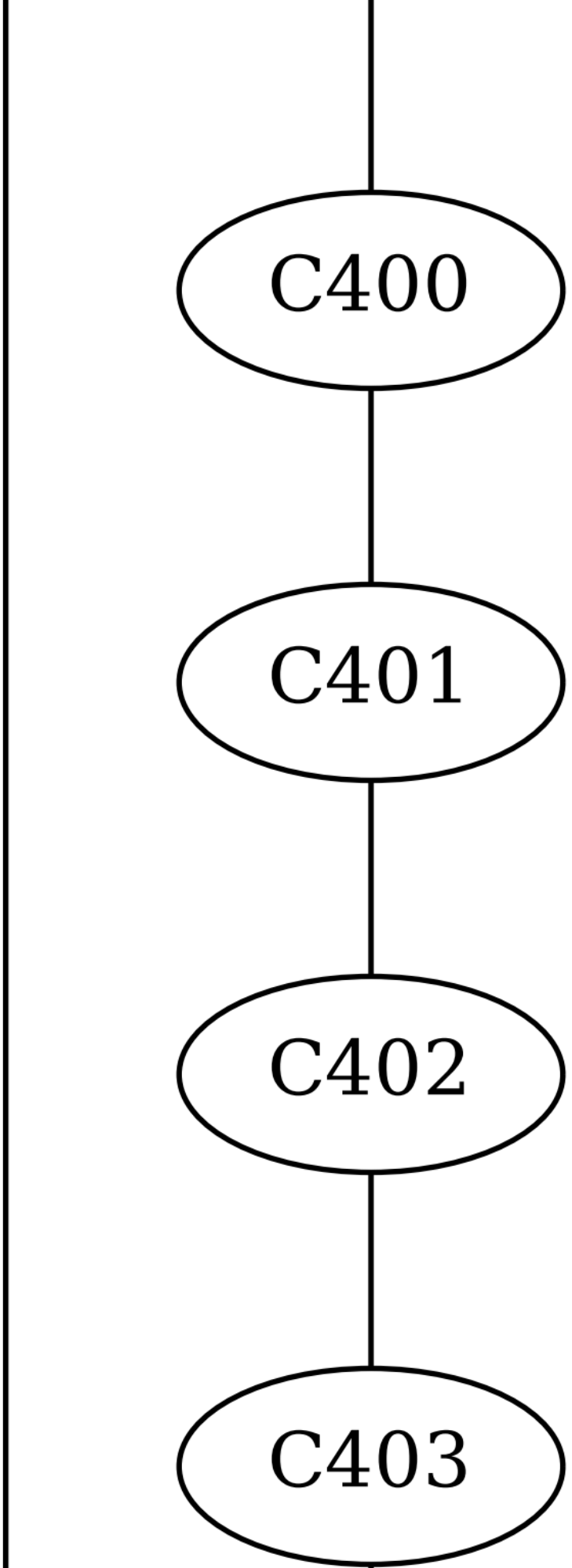
C400
C401
C402
C403

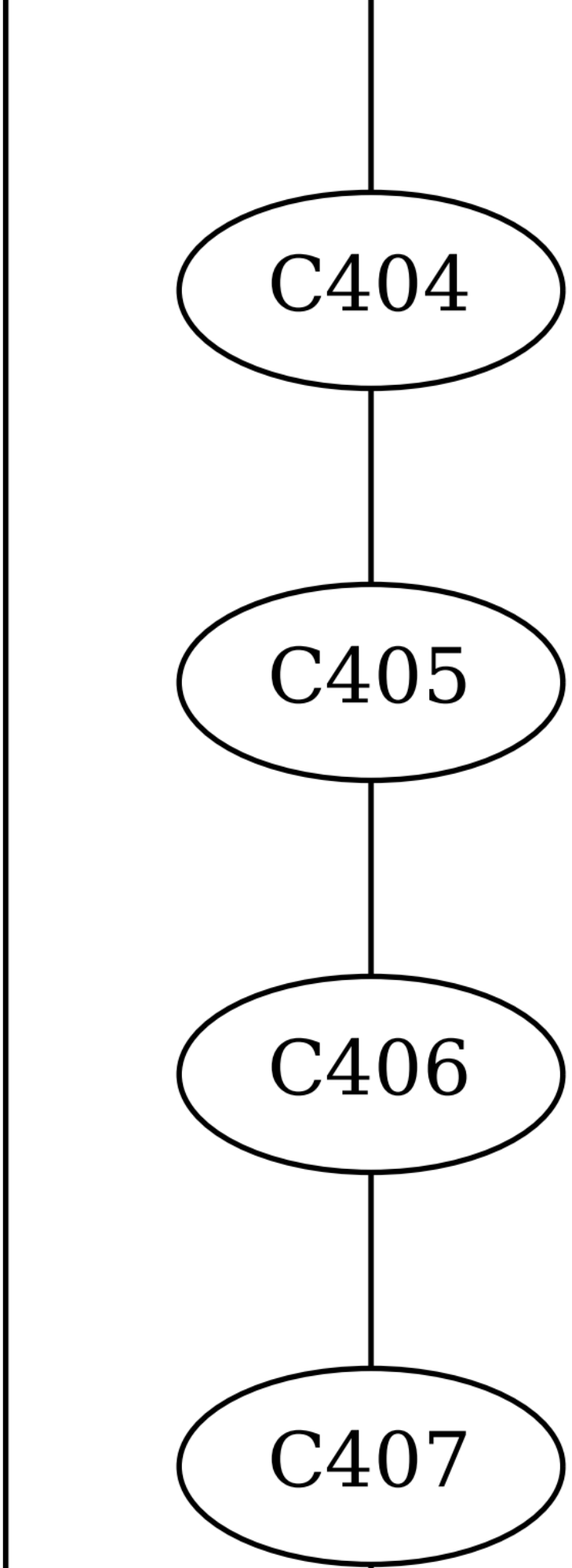
C404
C405
C406
C407

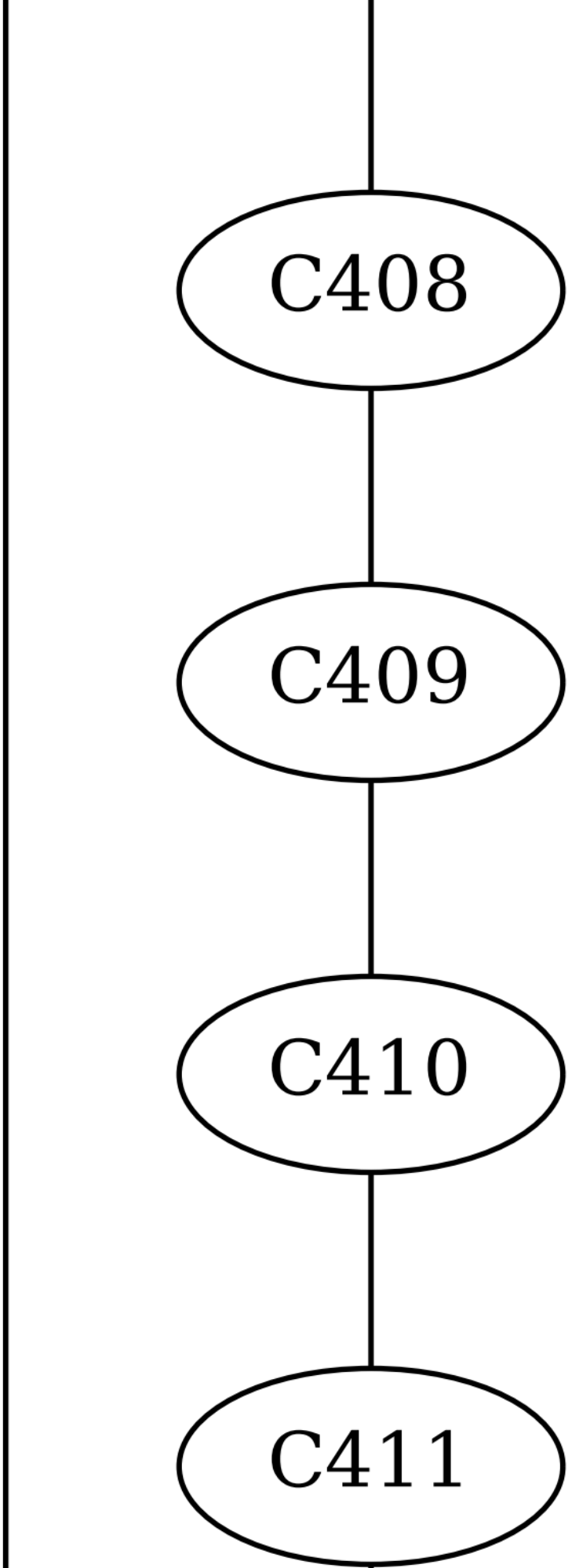
C408
C409
C410
C411

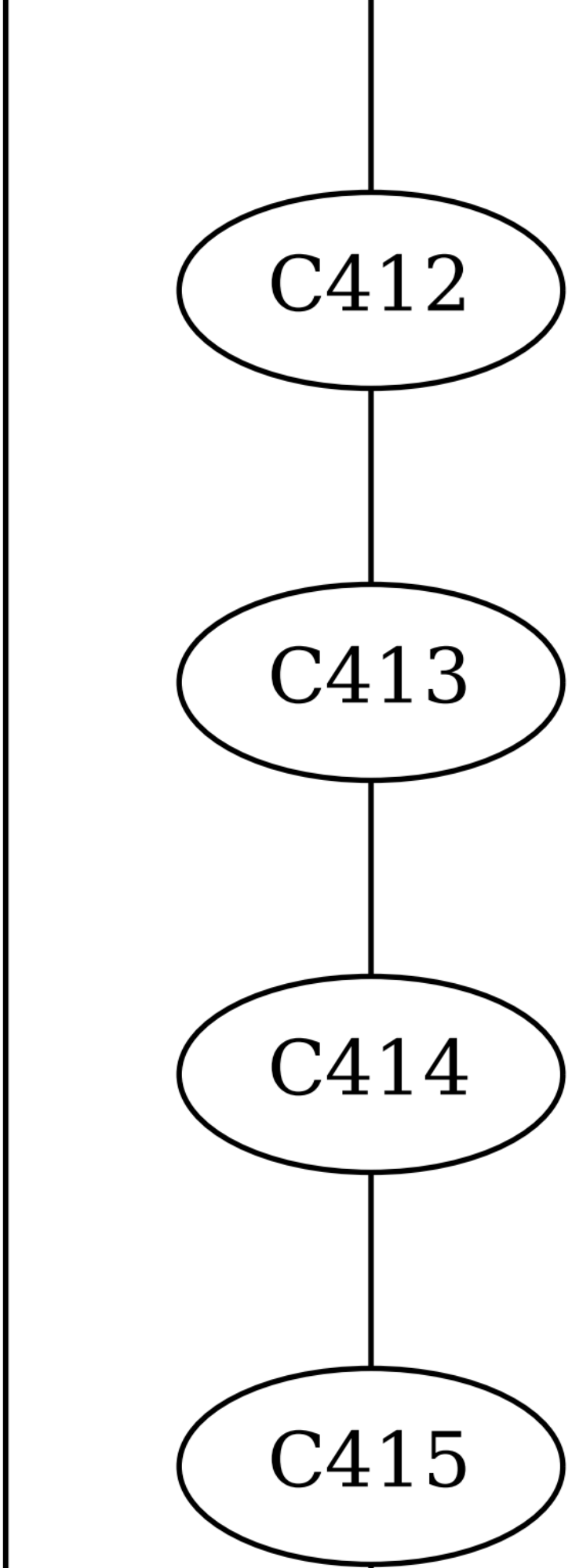
C412
C413
C414
C415

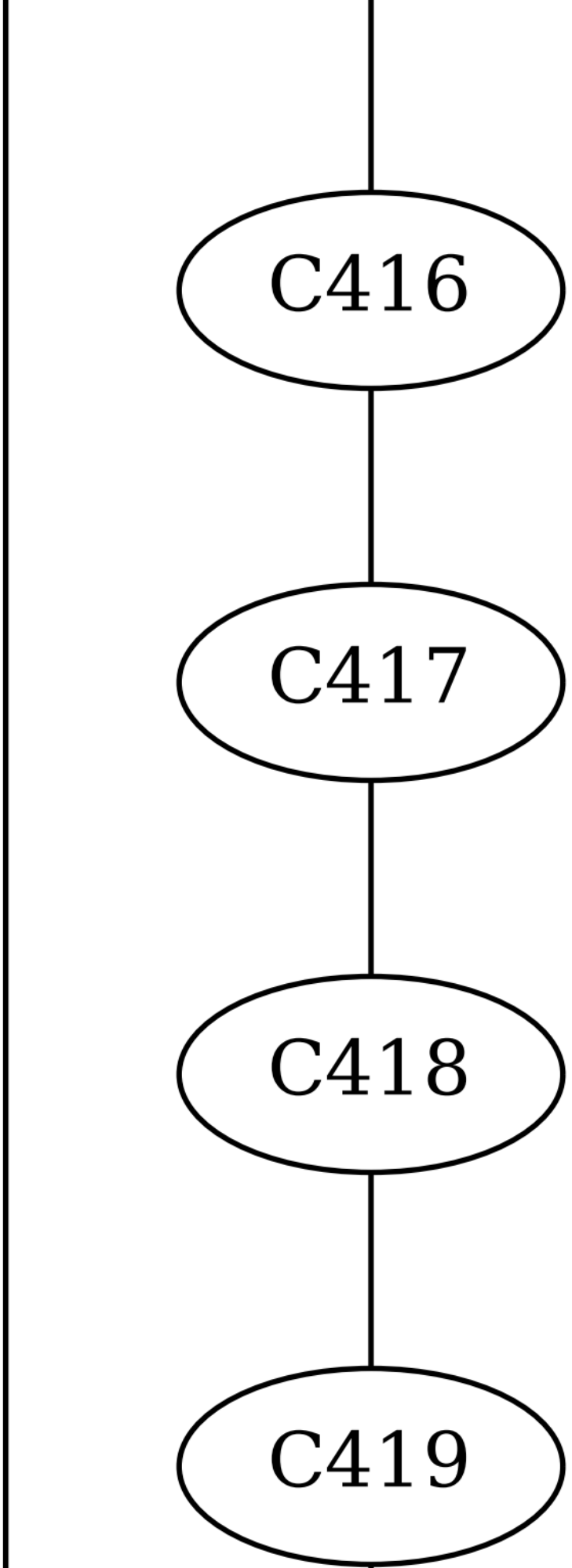
C416
C417
C418
C419

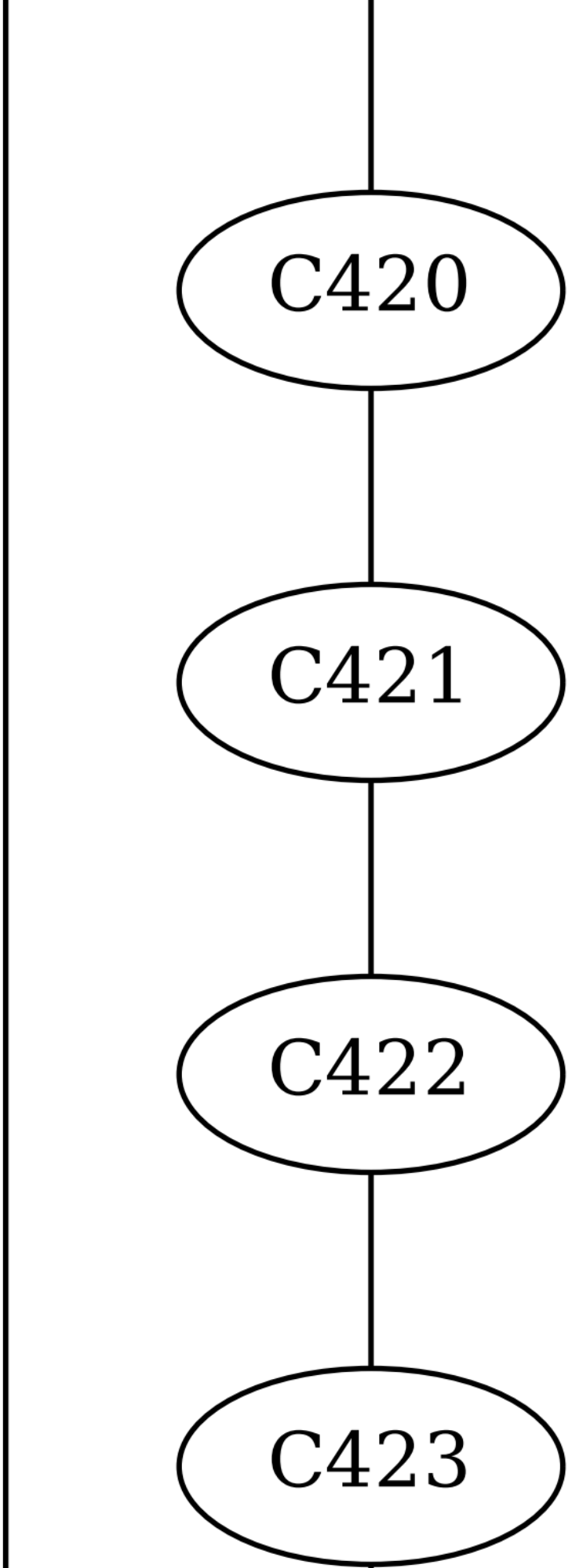
C420
C421
C422
C423

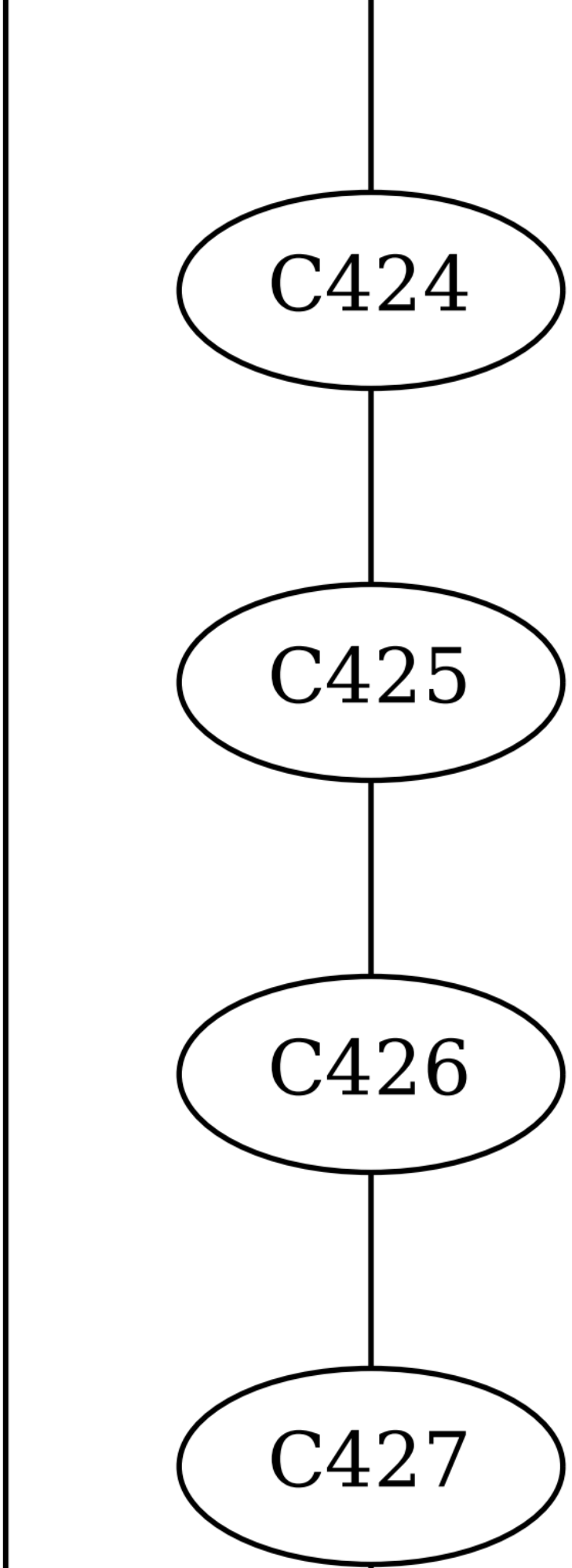
C424
C425
C426
C427

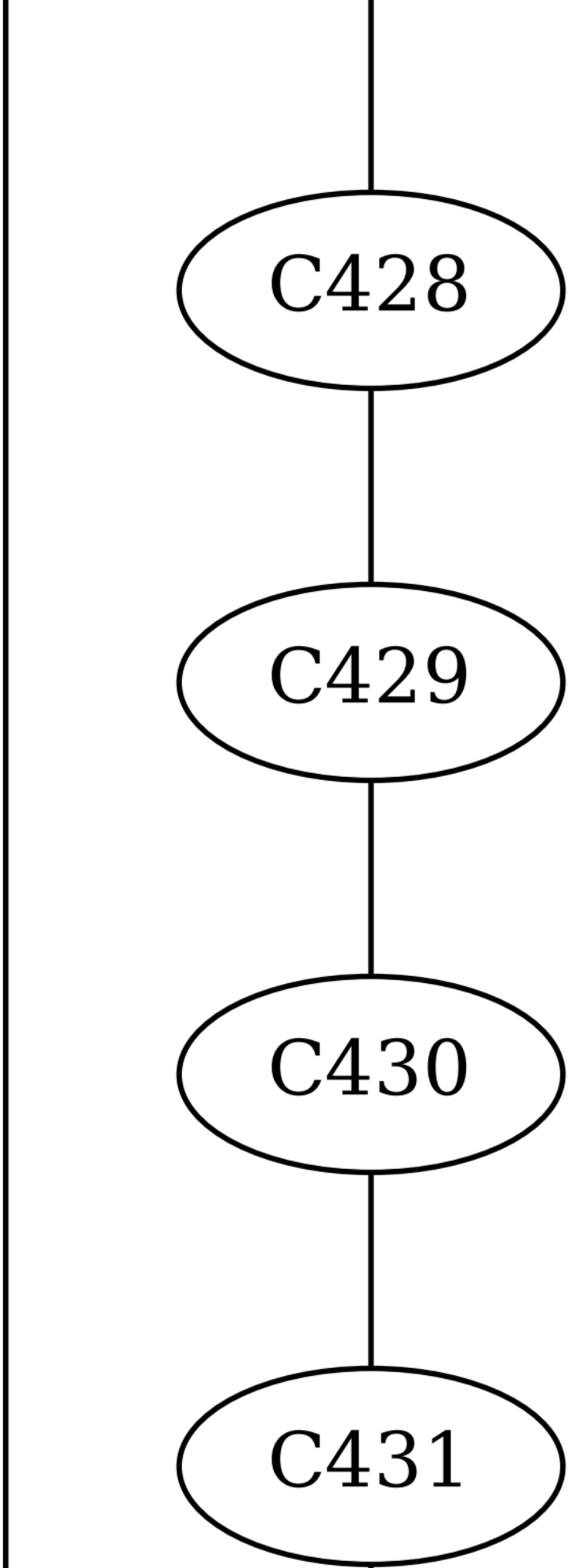
C428
C429
C430
C431

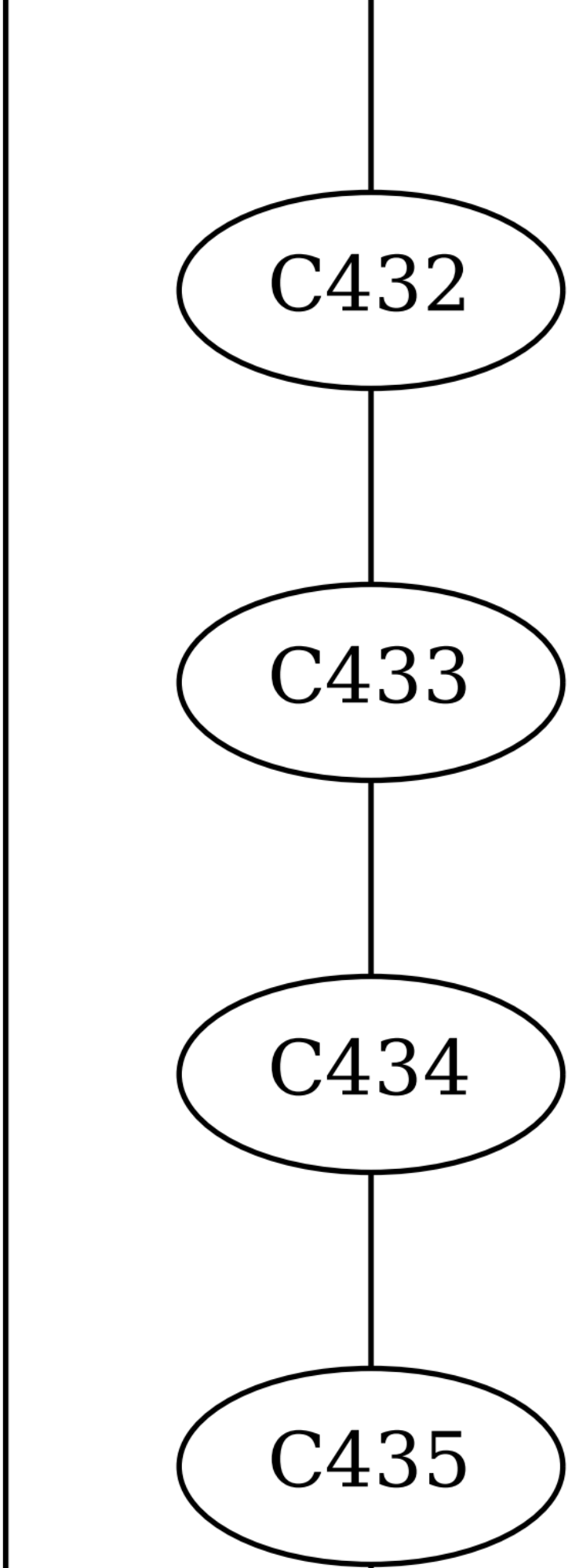
C432
C433
C434
C435

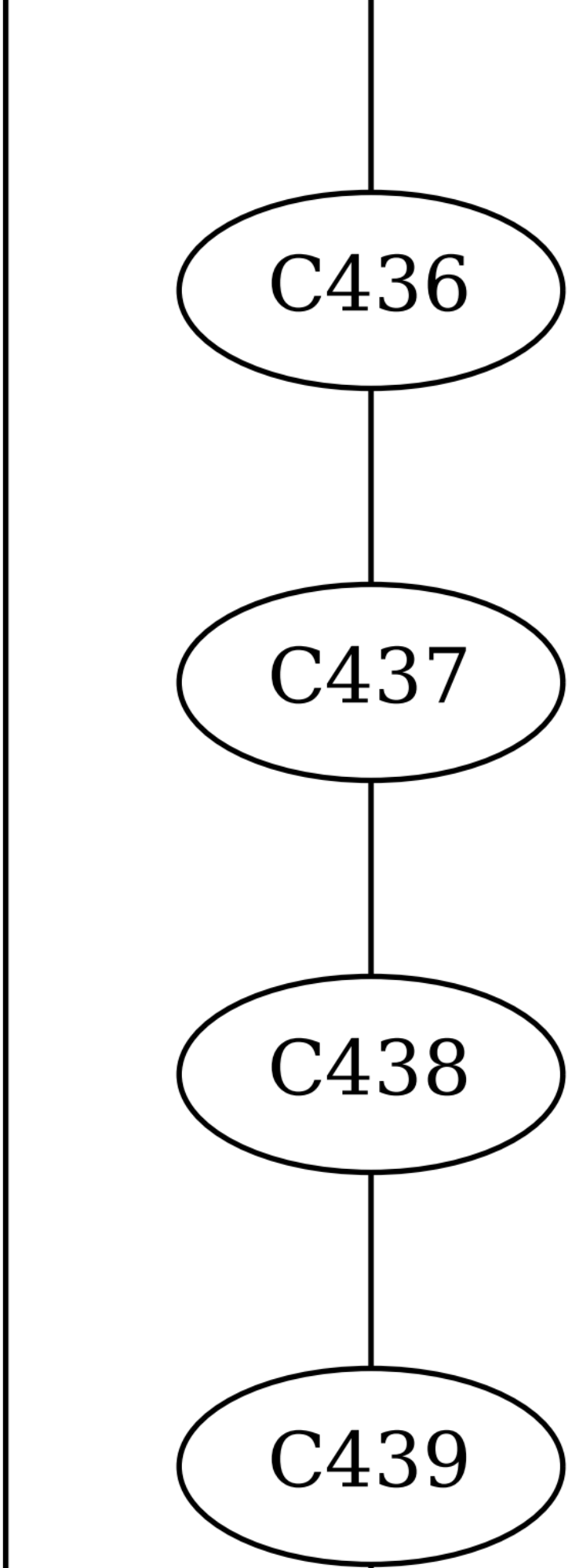
C436
C437
C438
C439

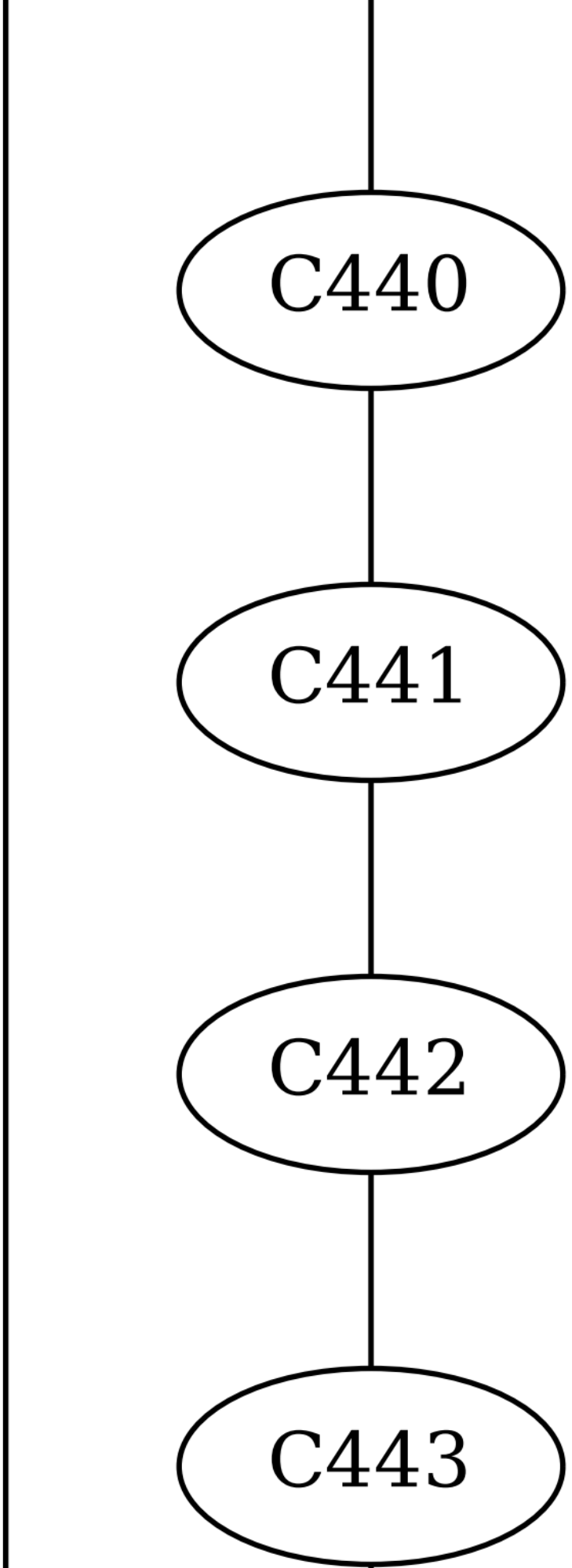
C440
C441
C442
C443

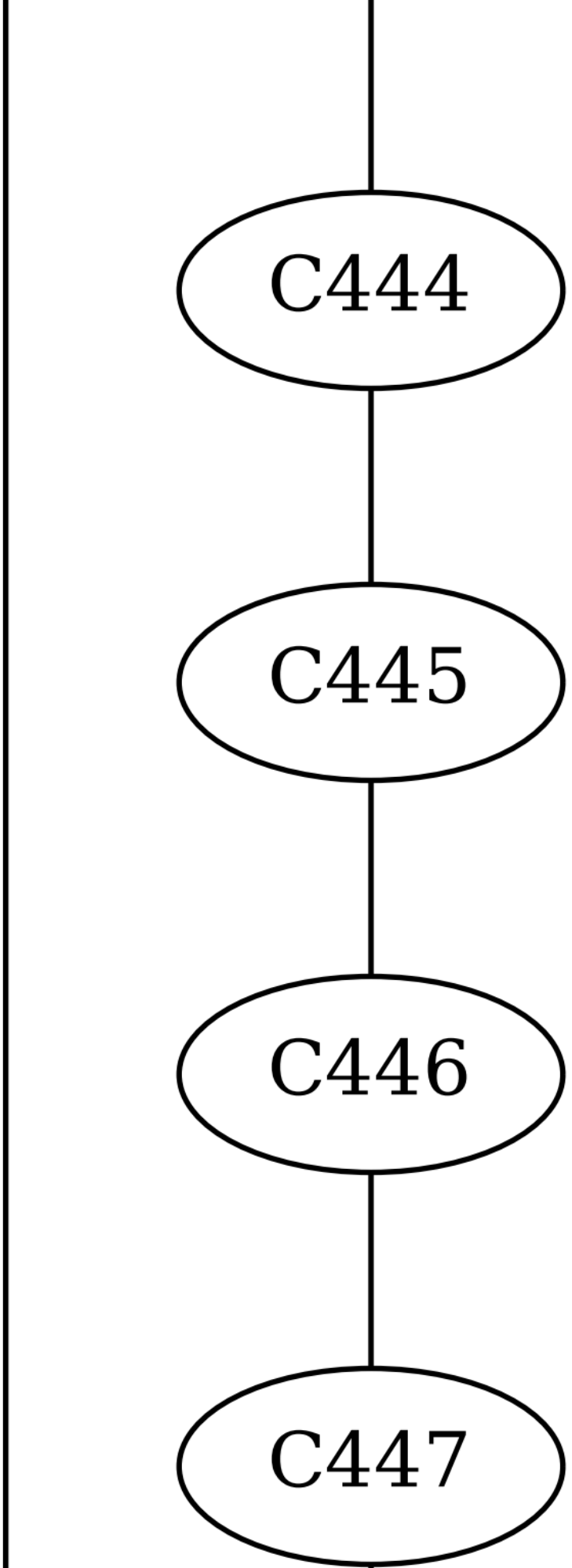
C444
C445
C446
C447

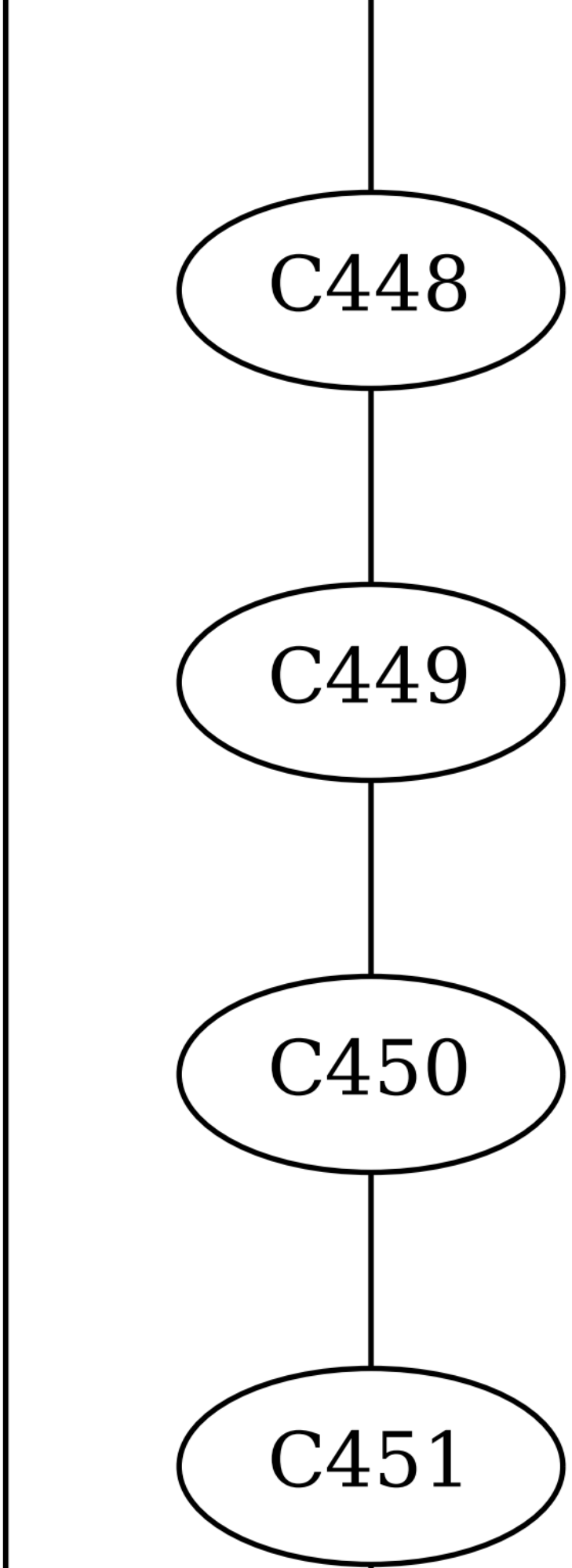
C448
C449
C450
C451

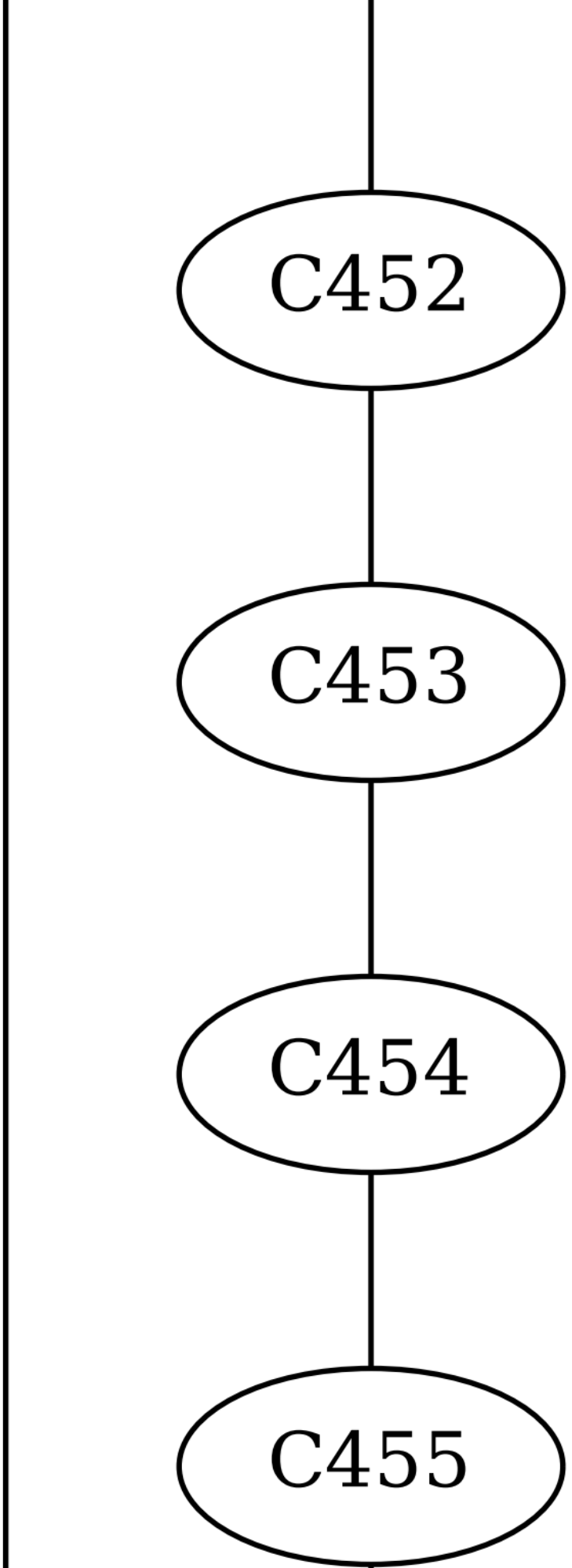
C452
C453
C454
C455

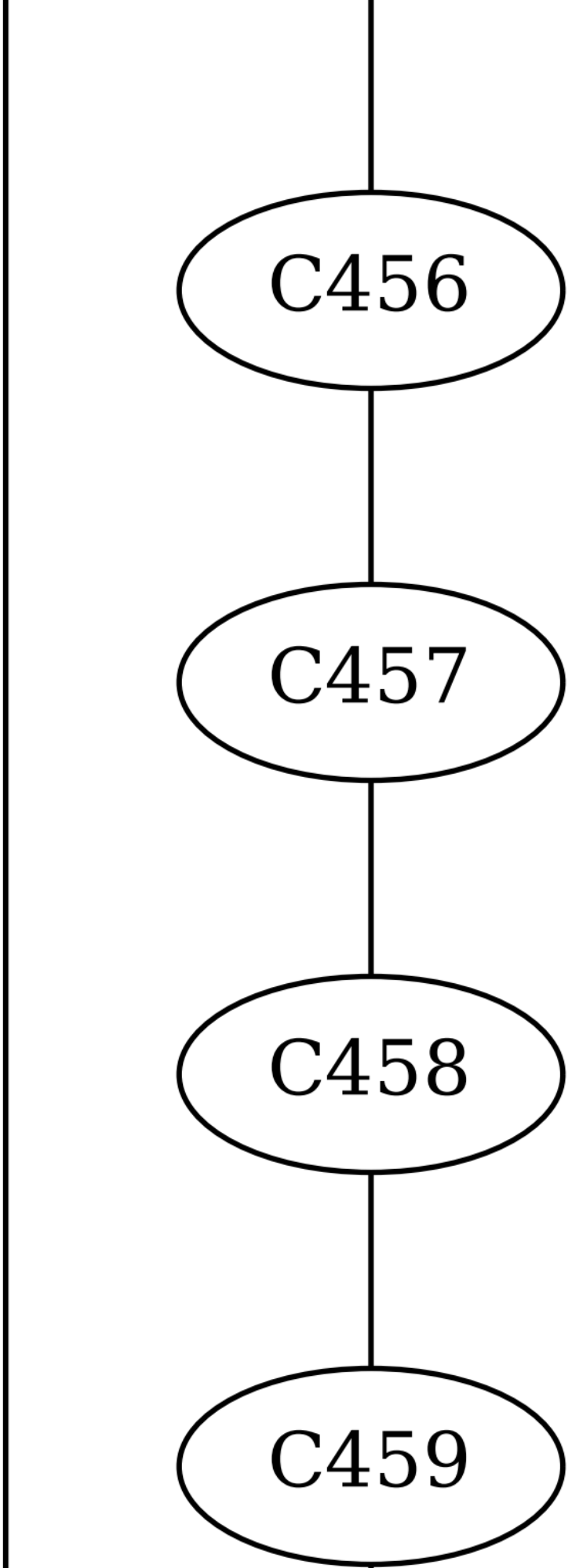
C456
C457
C458
C459

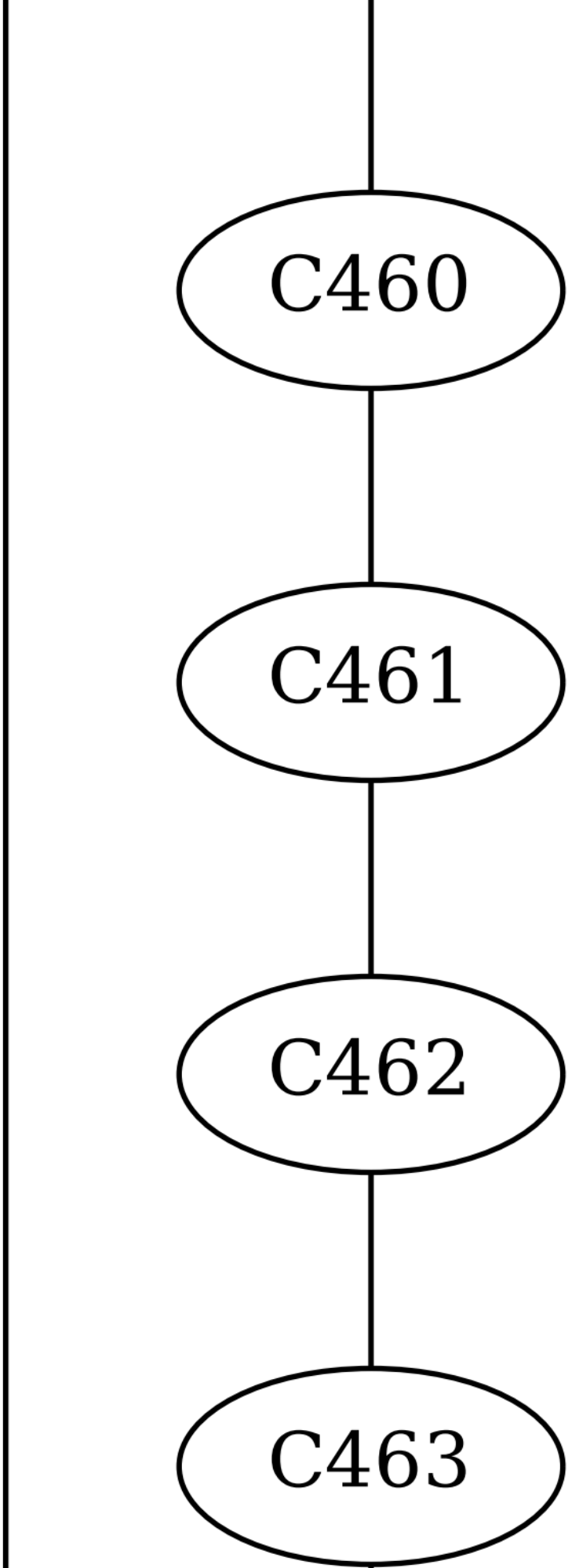
C460
C461
C462
C463

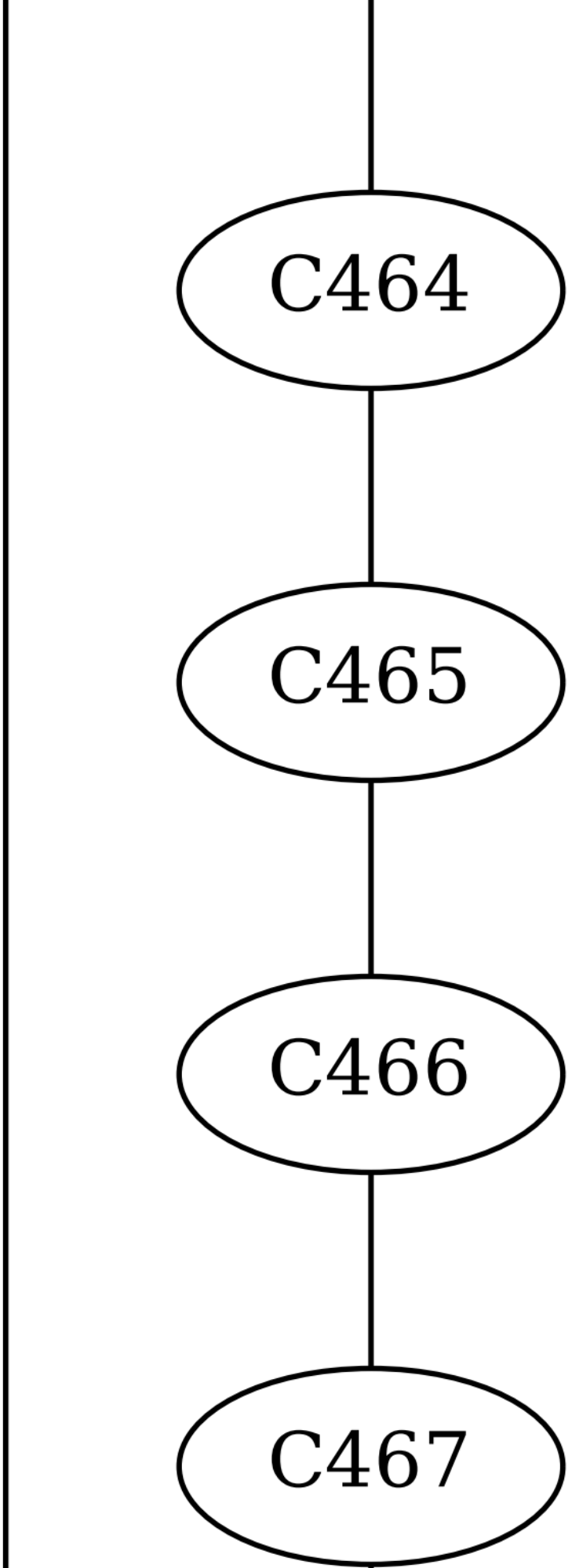
C464
C465
C466
C467

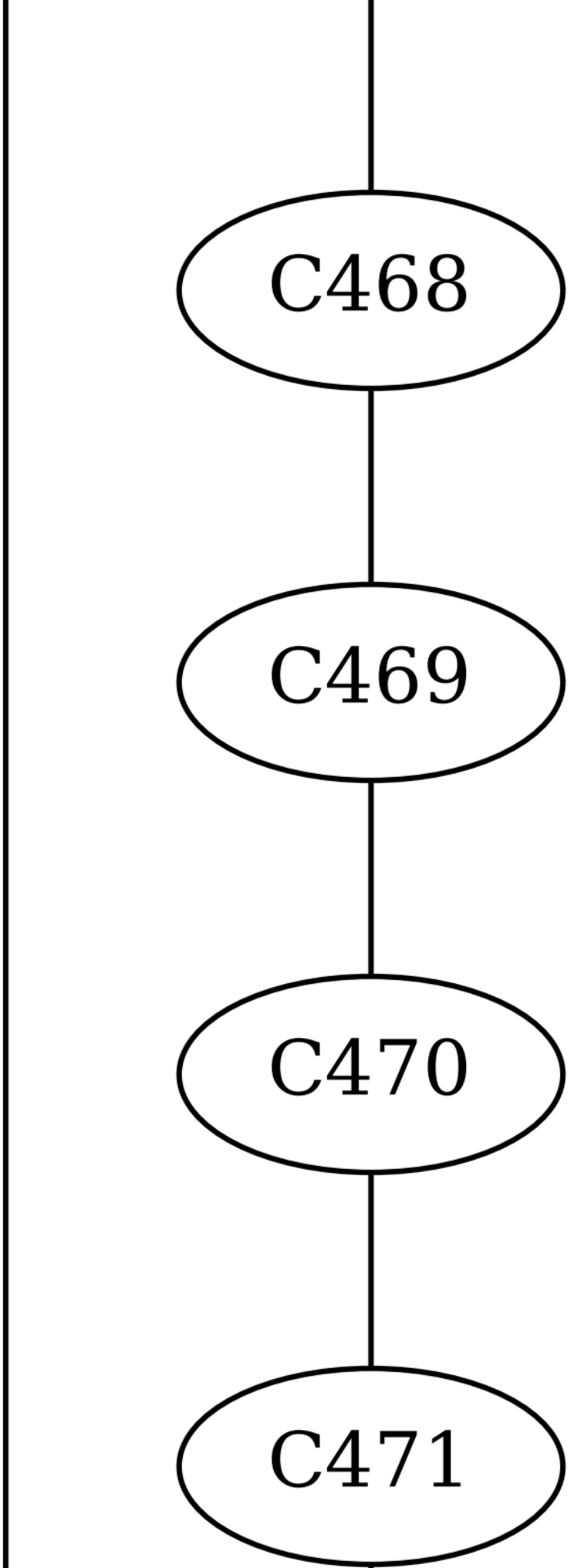
C468
C469
C470
C471

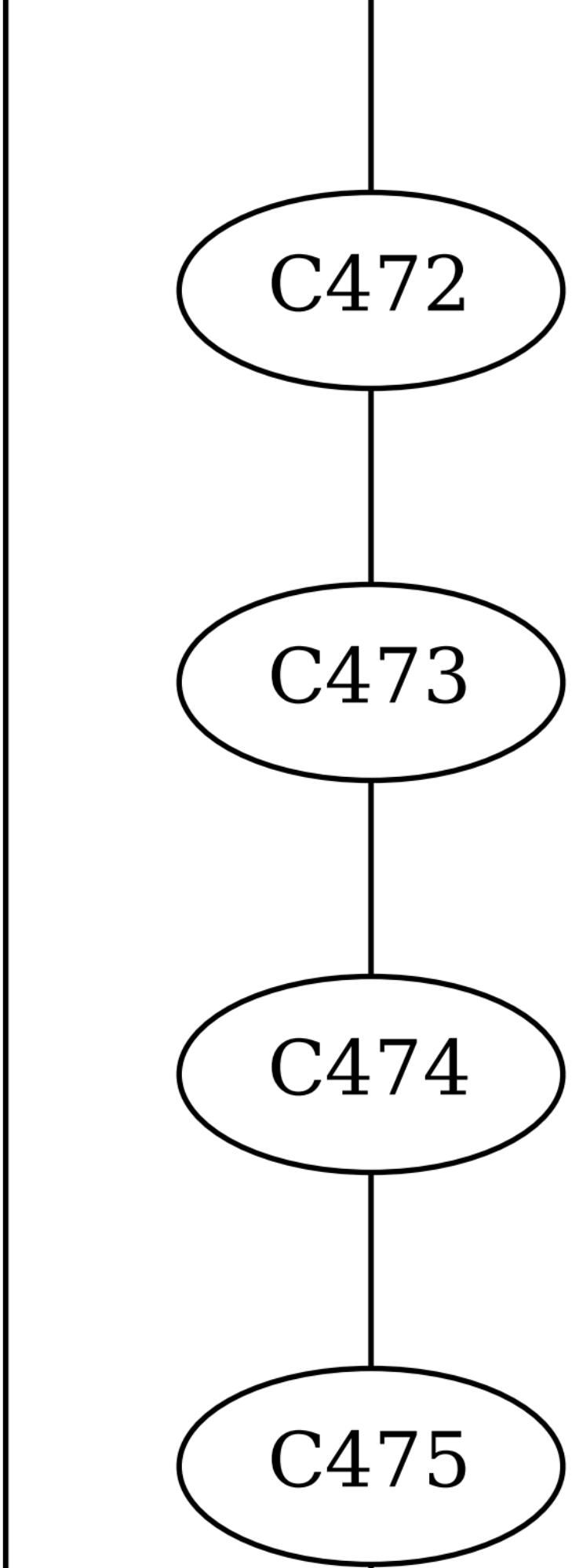
C472
C473
C474
C475

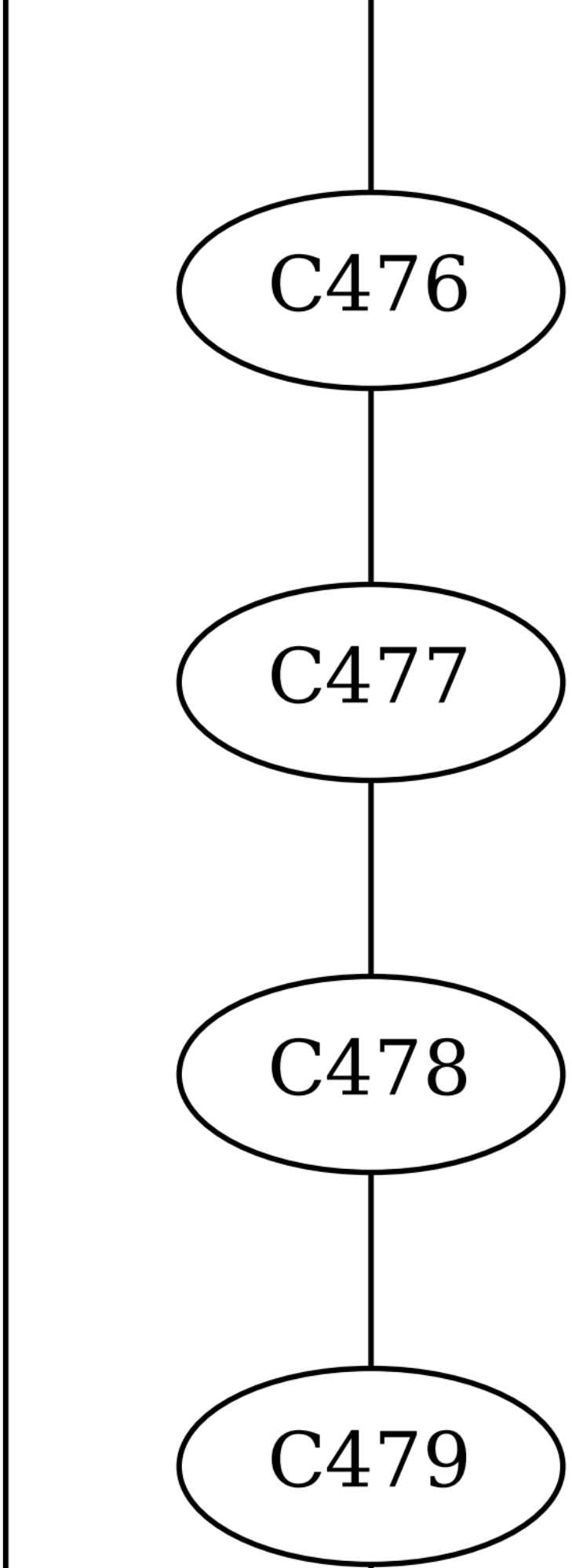
C476
C477
C478
C479

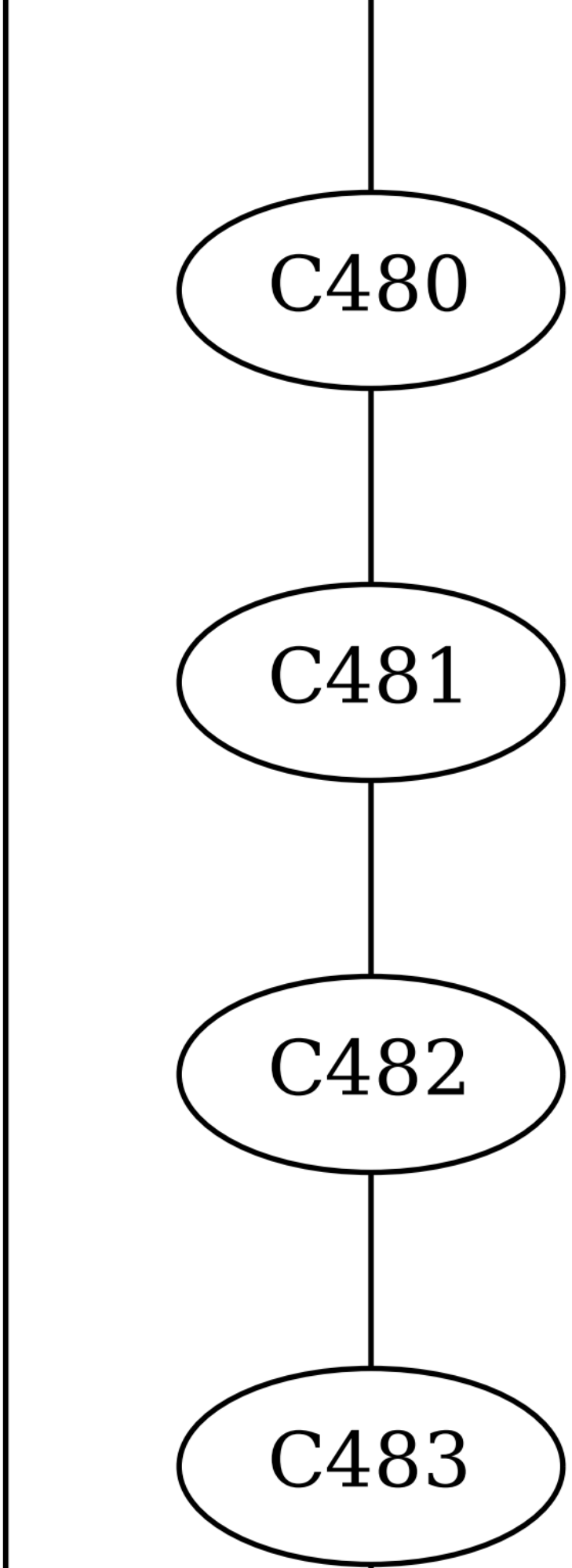
C480
C481
C482
C483

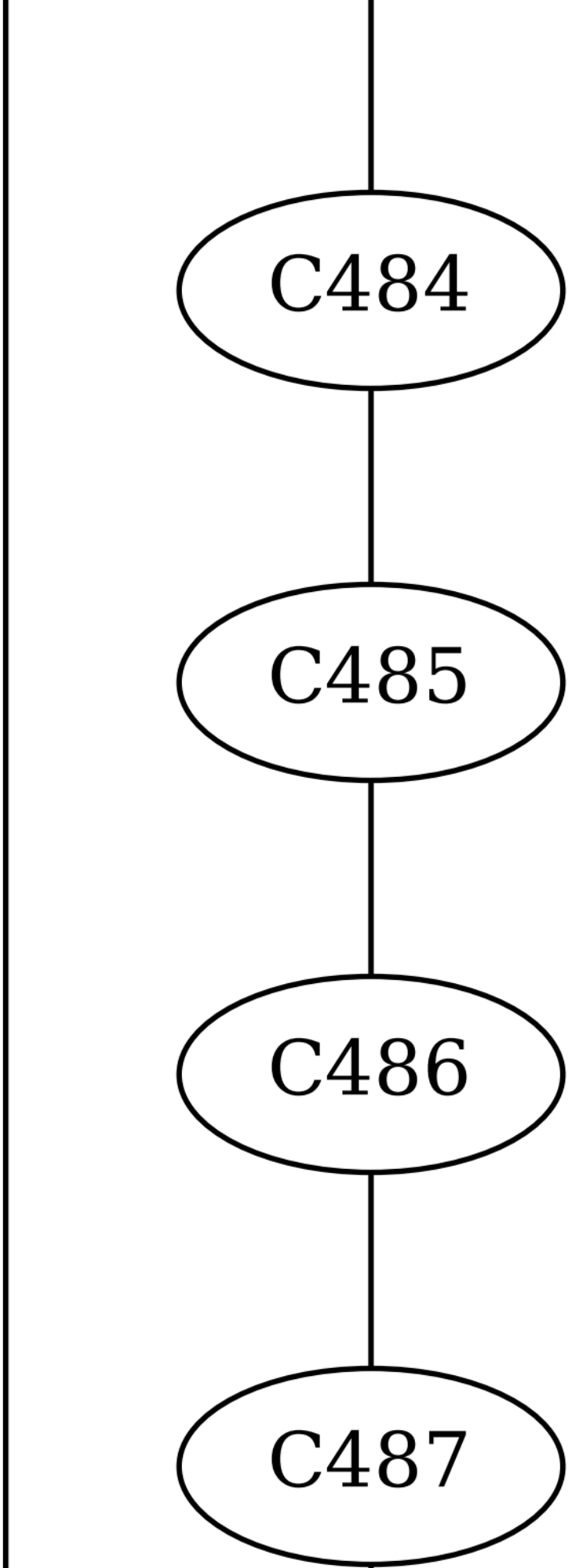
C484
C485
C486
C487

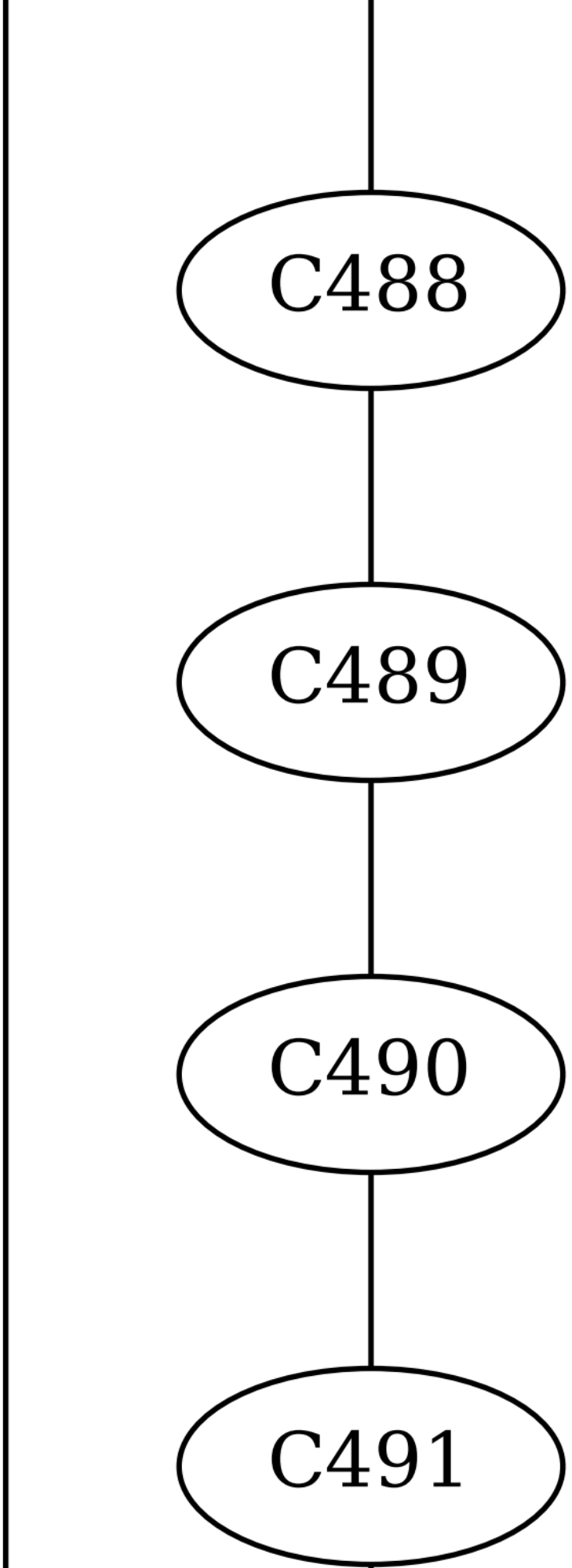
C488
C489
C490
C491

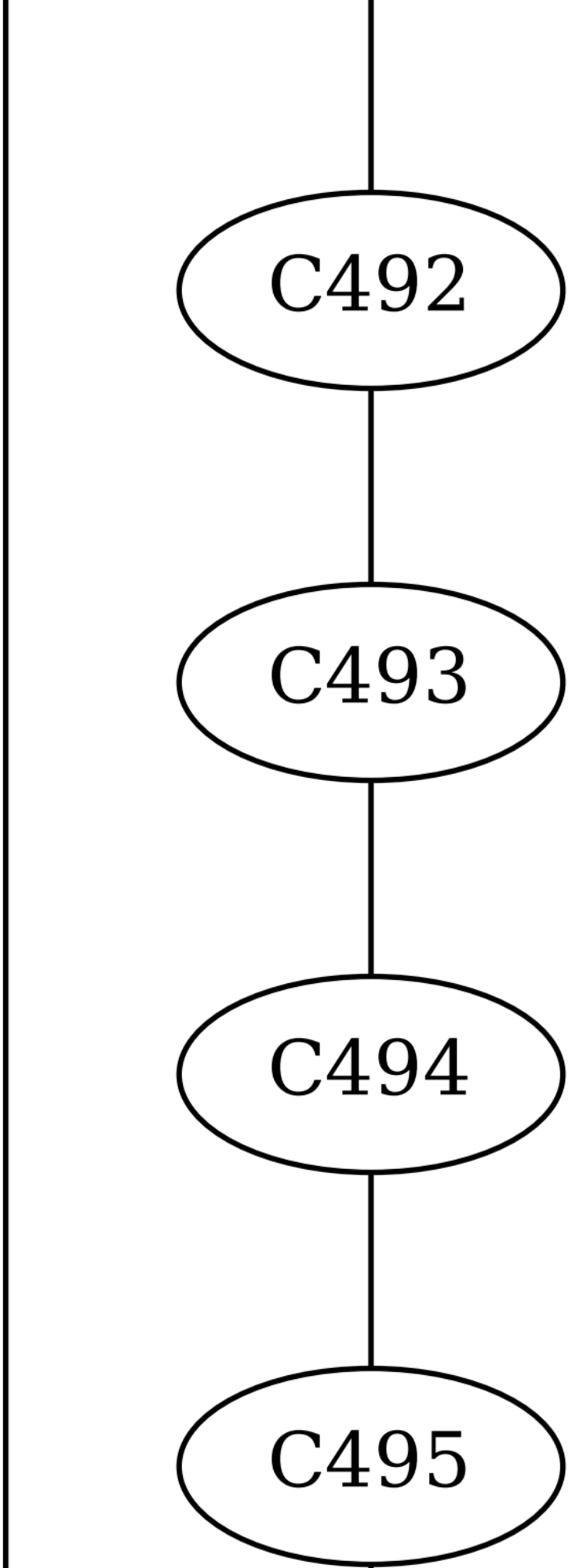
C492
C493
C494
C495

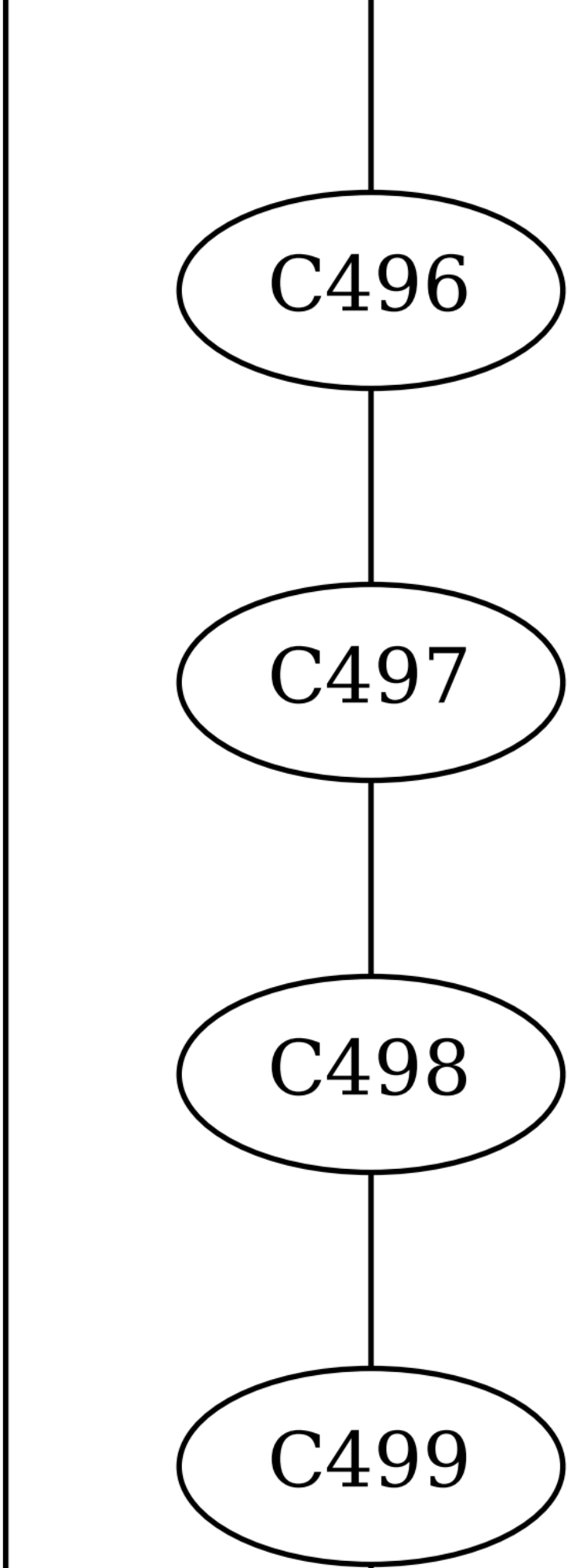
C496
C497
C498
C499

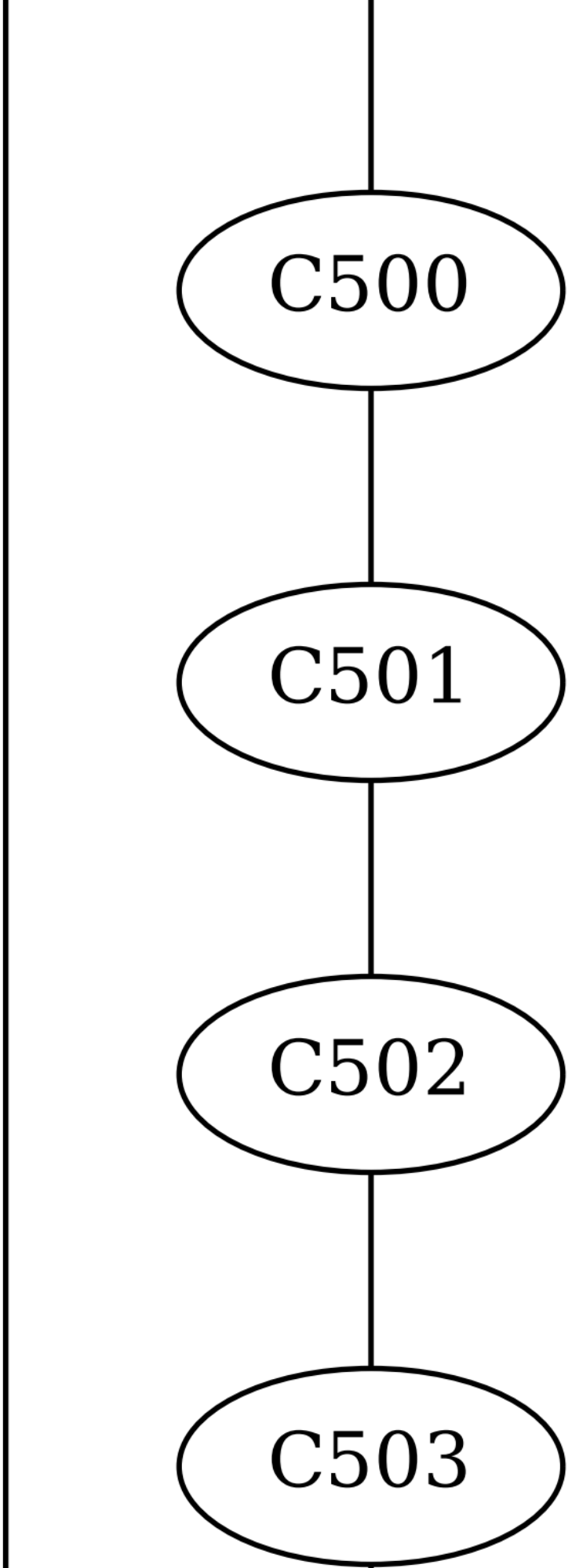
C500
C501
C502
C503

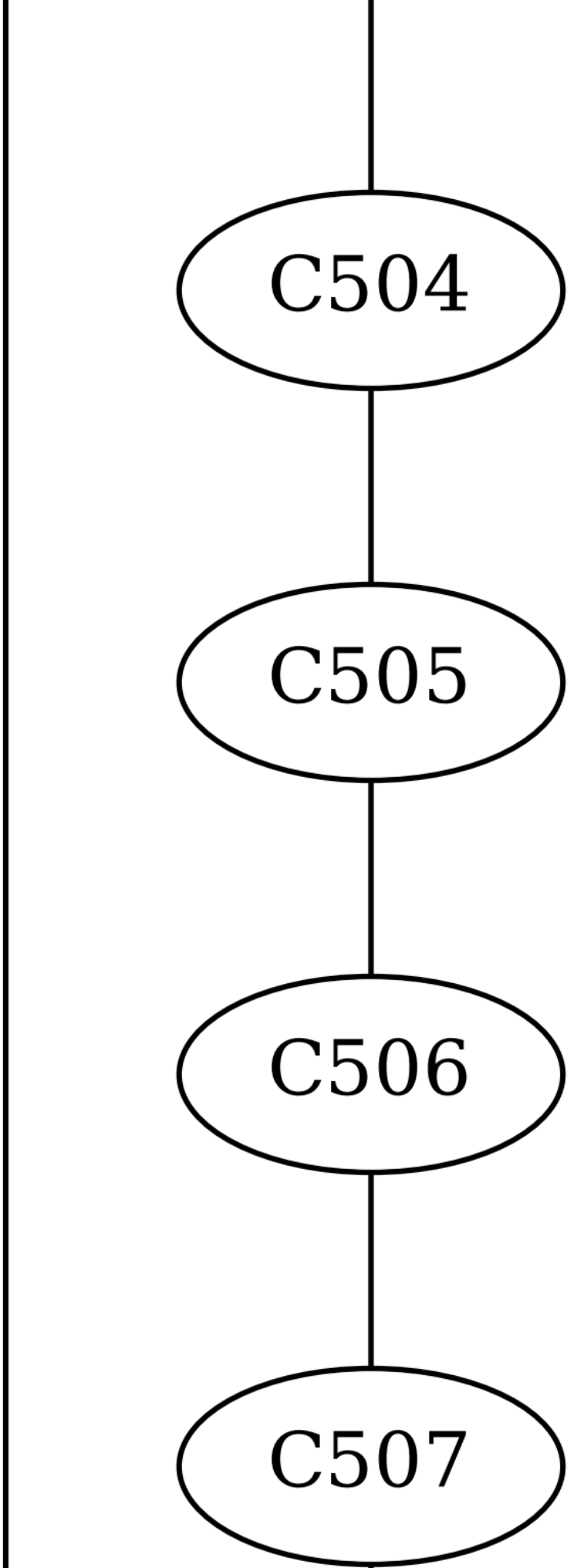
C504
C505
C506
C507

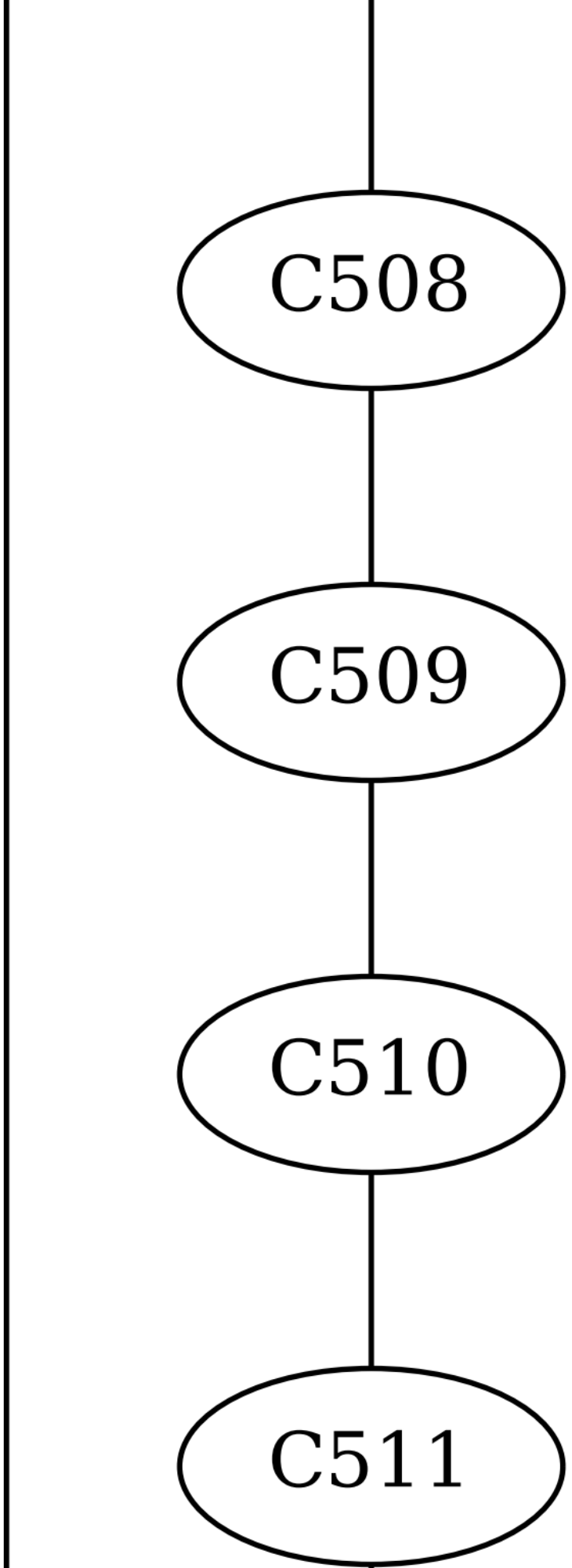
C508
C509
C510
C511

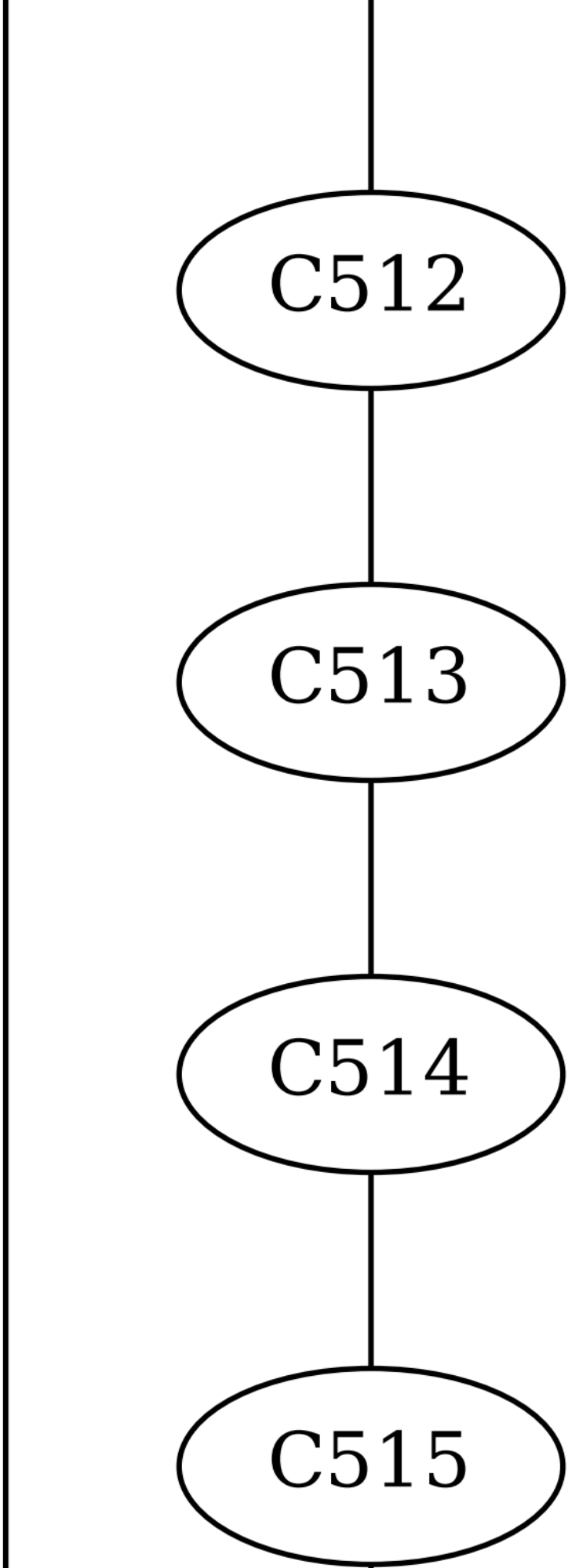
C512
C513
C514
C515

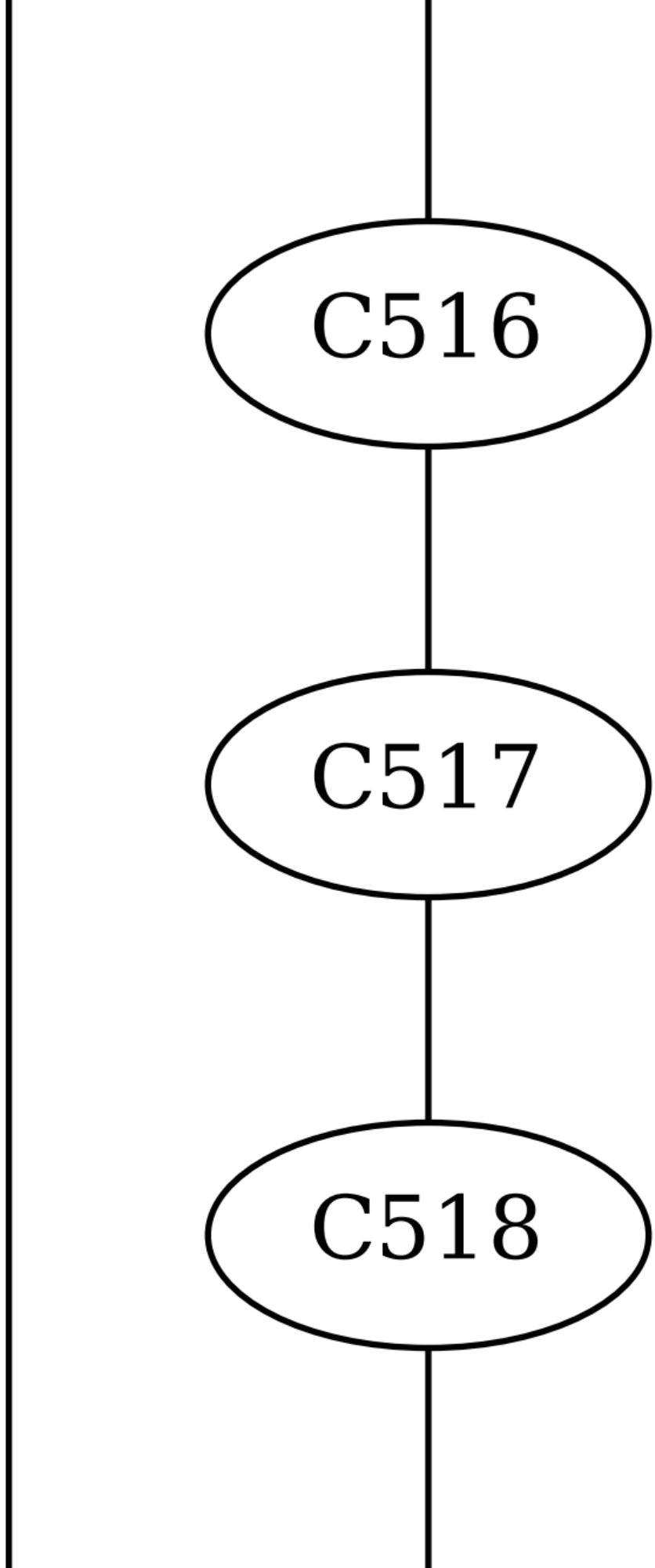
C516
C517
C518

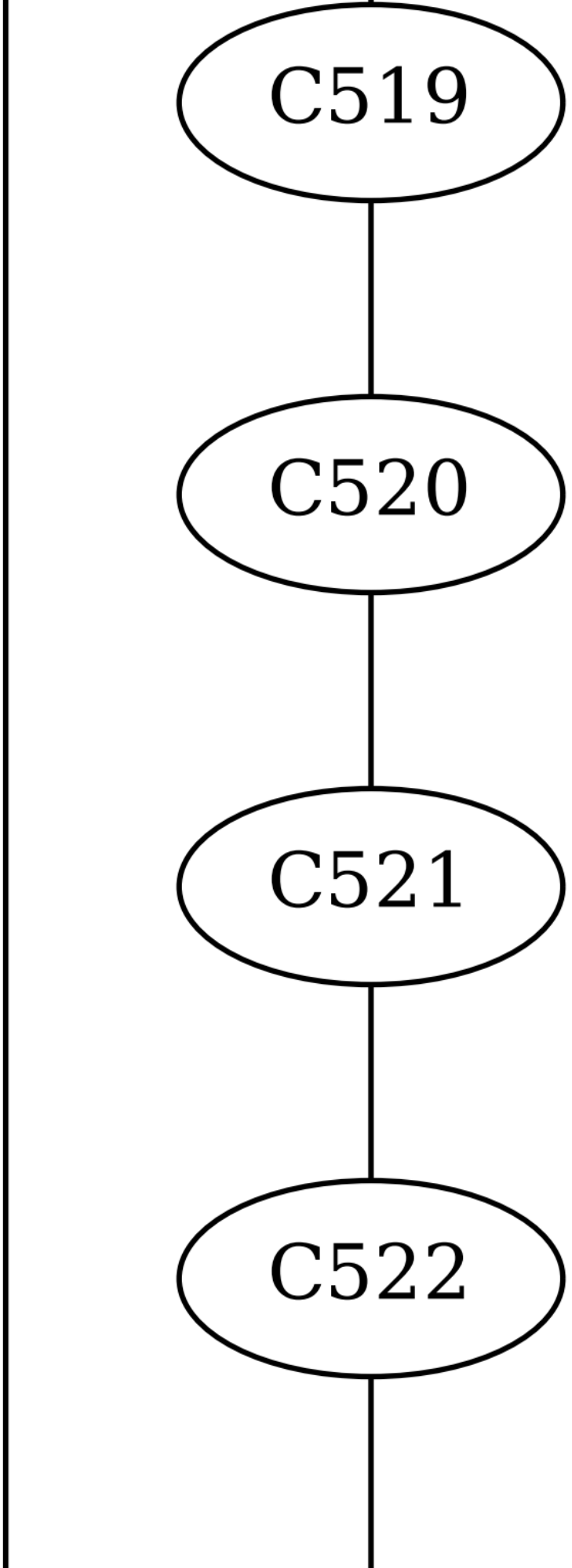
C519
C520
C521
C522

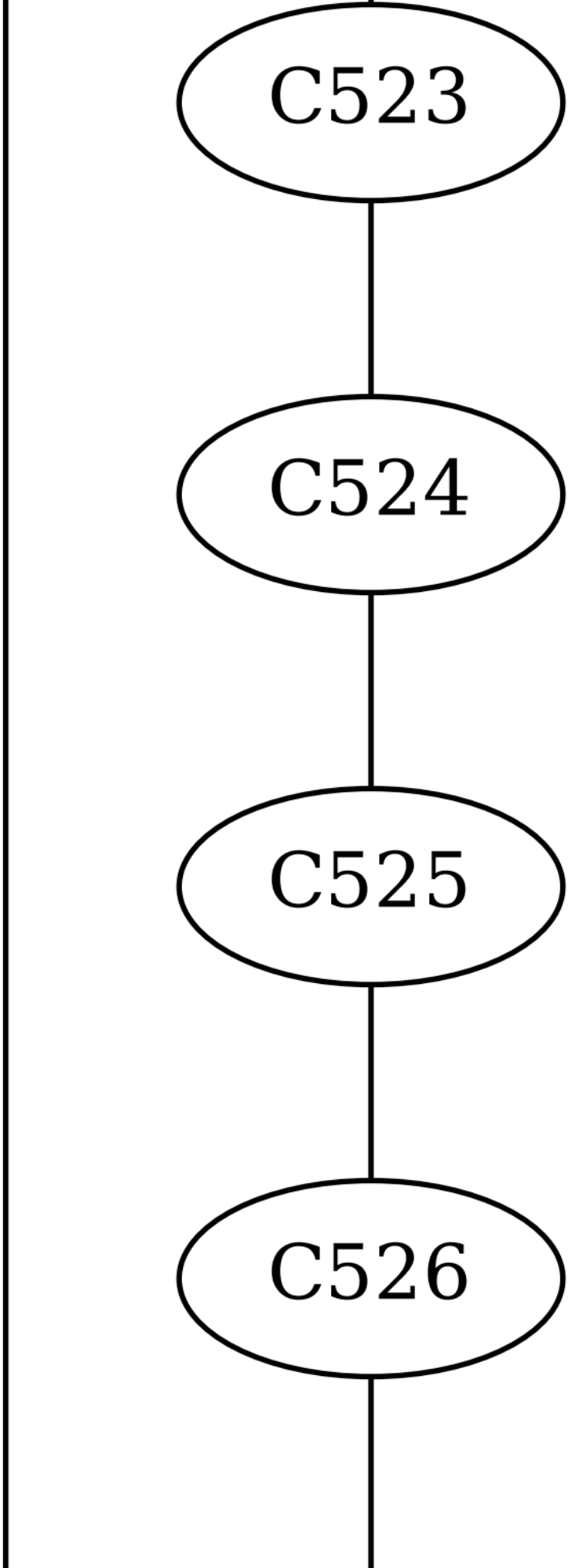
C523
C524
C525
C526

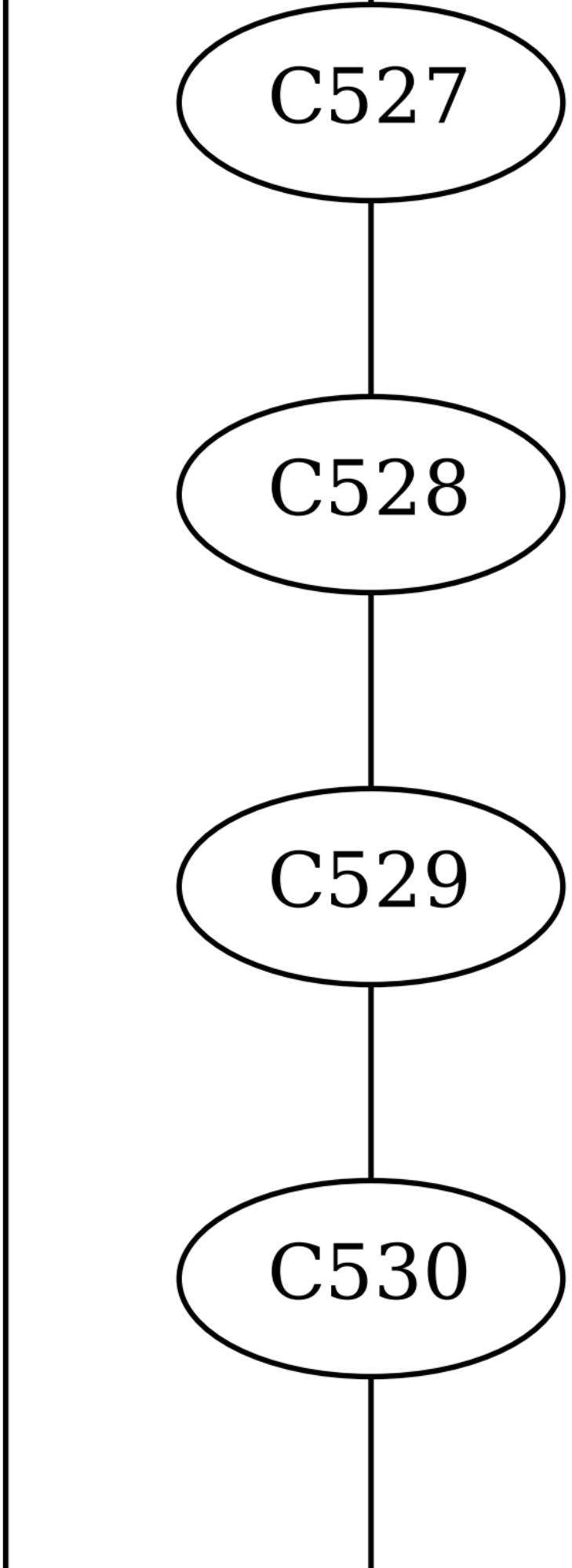
C527
C528
C529
C530

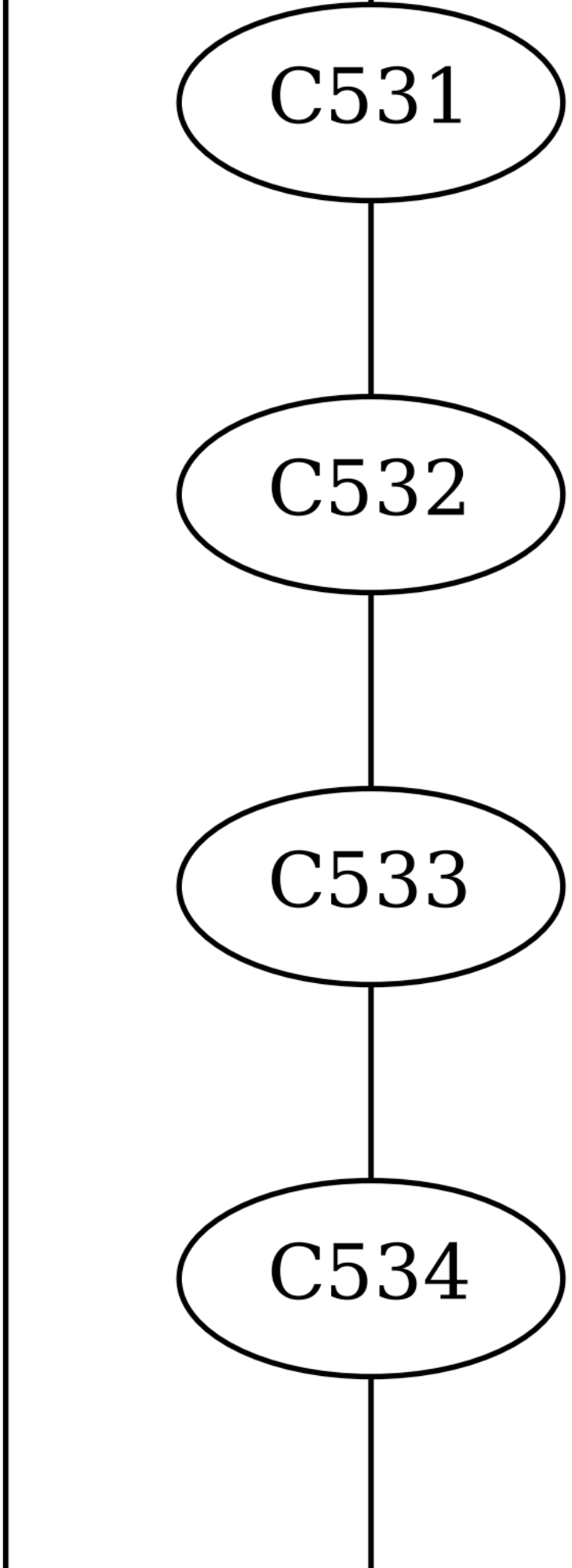
C531
C532
C533
C534

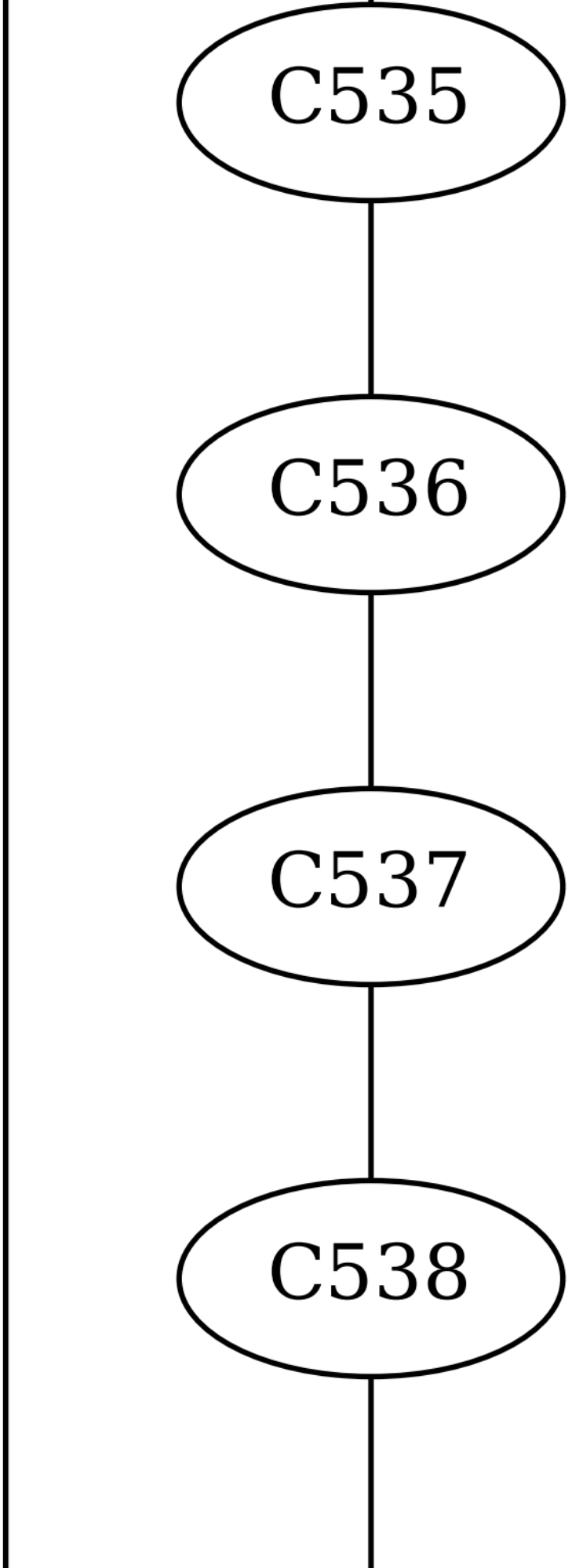
C535
C536
C537
C538

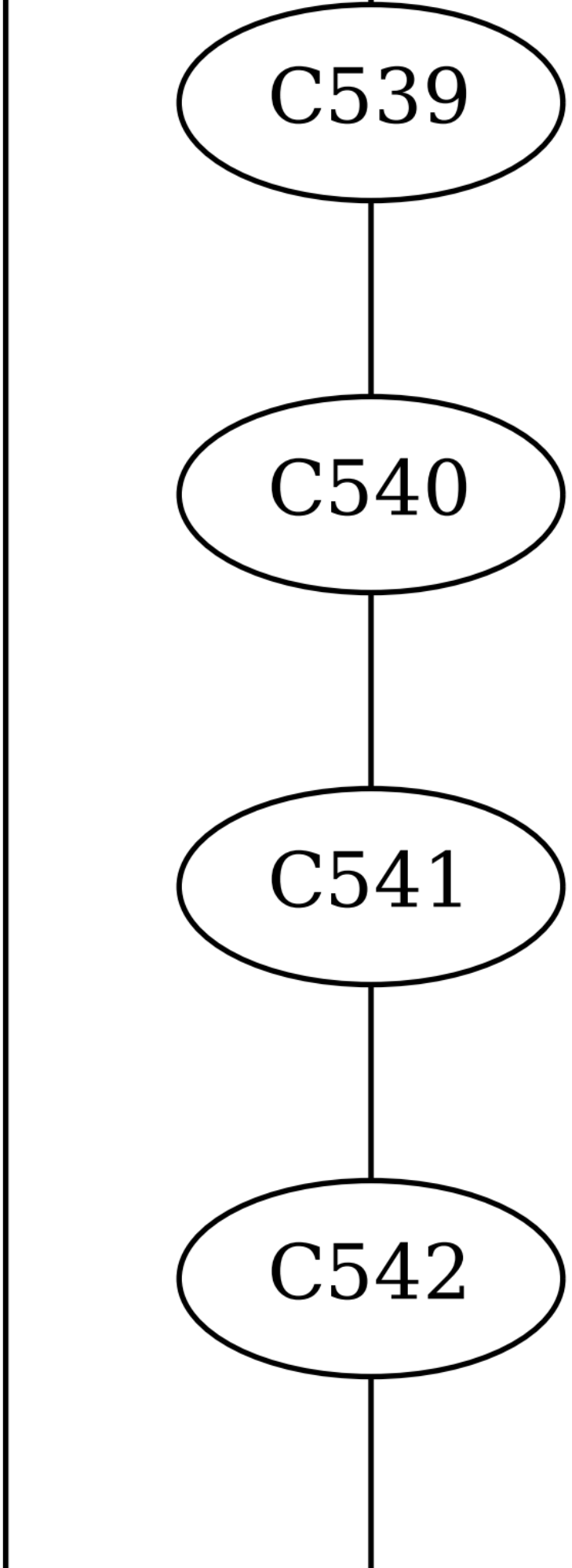
C539
C540
C541
C542

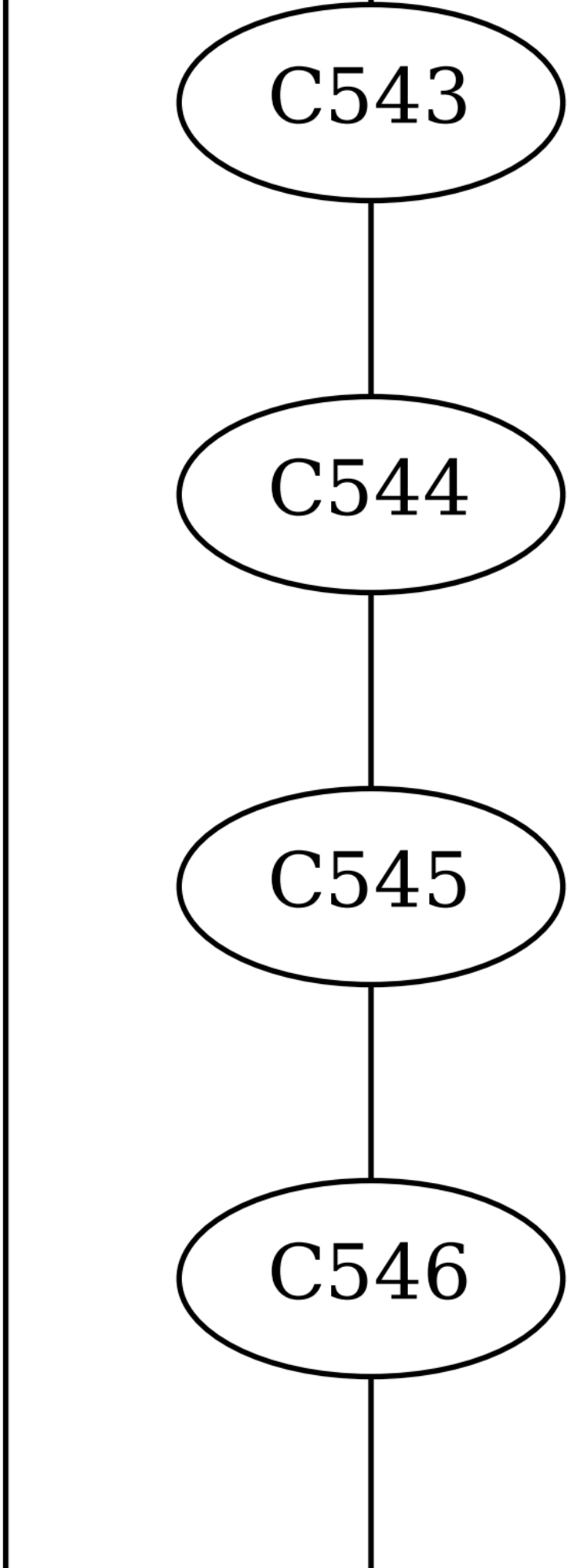
C543
C544
C545
C546

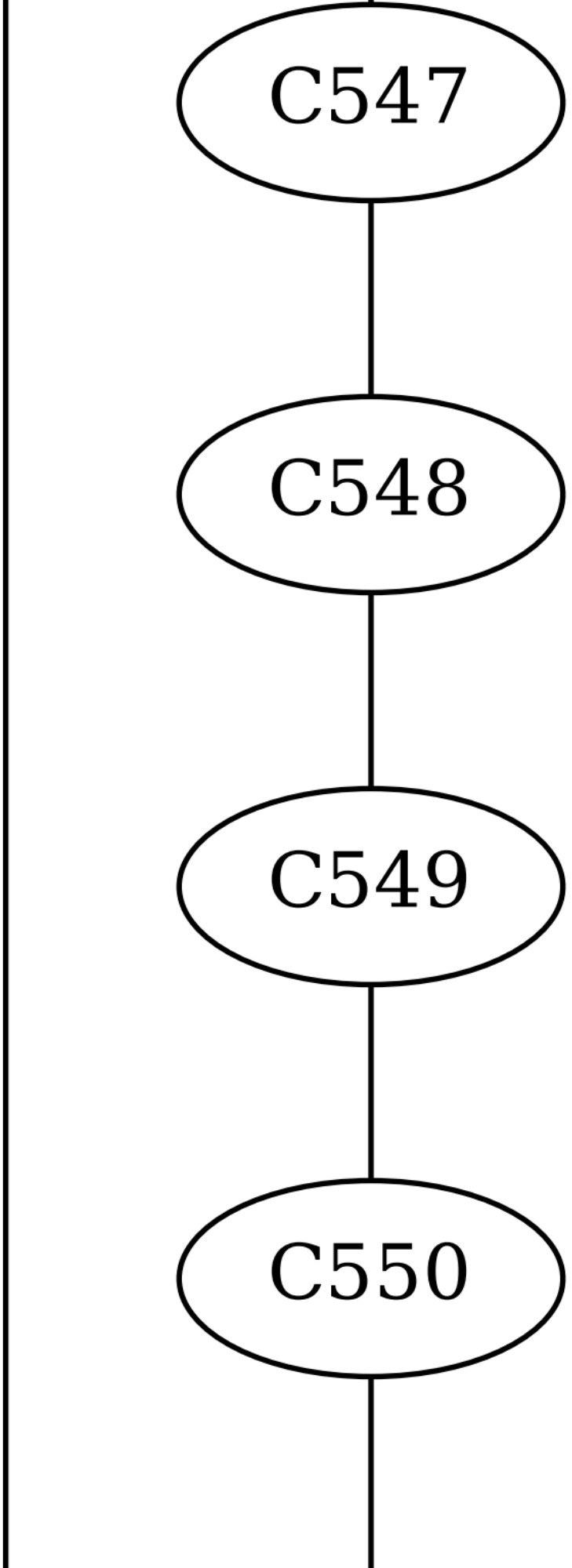
C547
C548
C549
C550

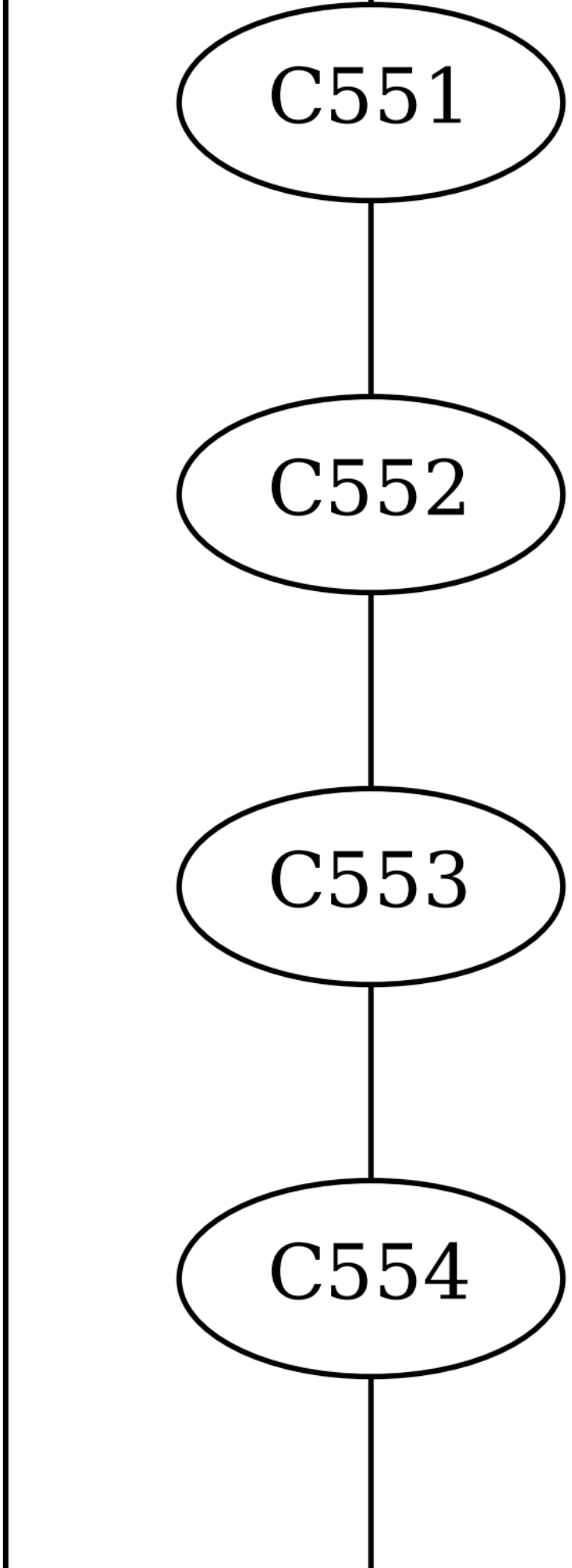
C551
C552
C553
C554

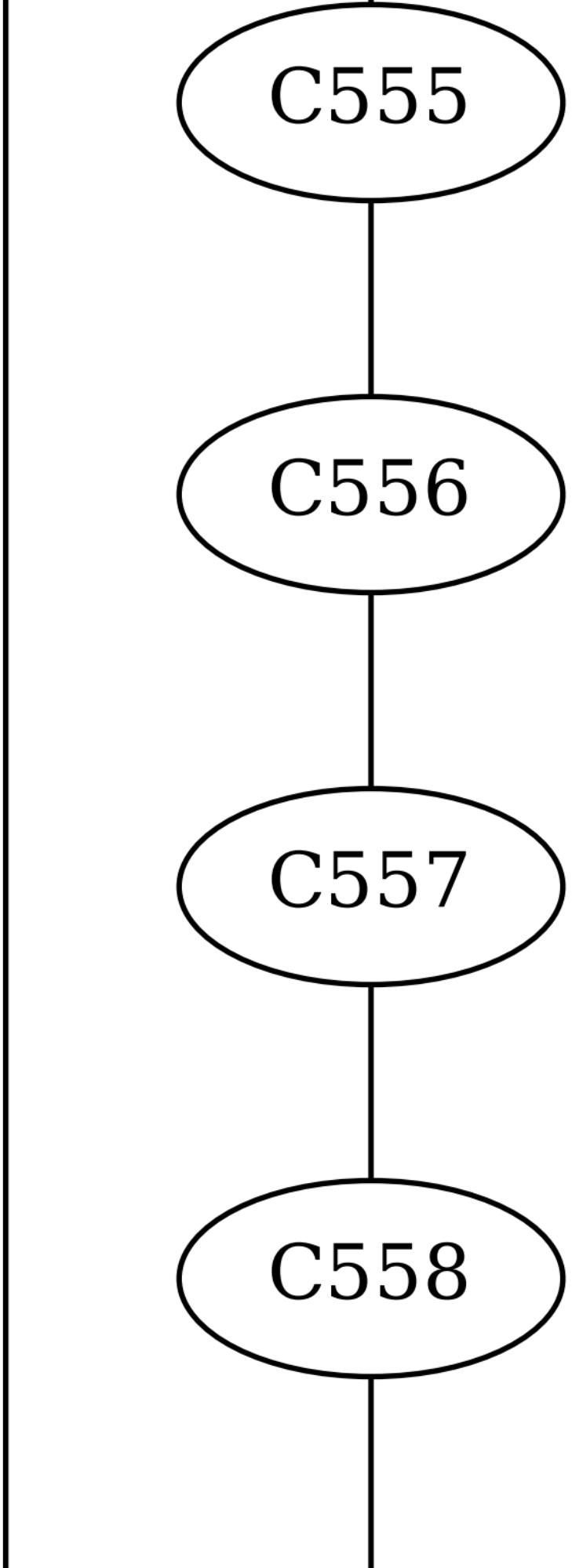
C555
C556
C557
C558

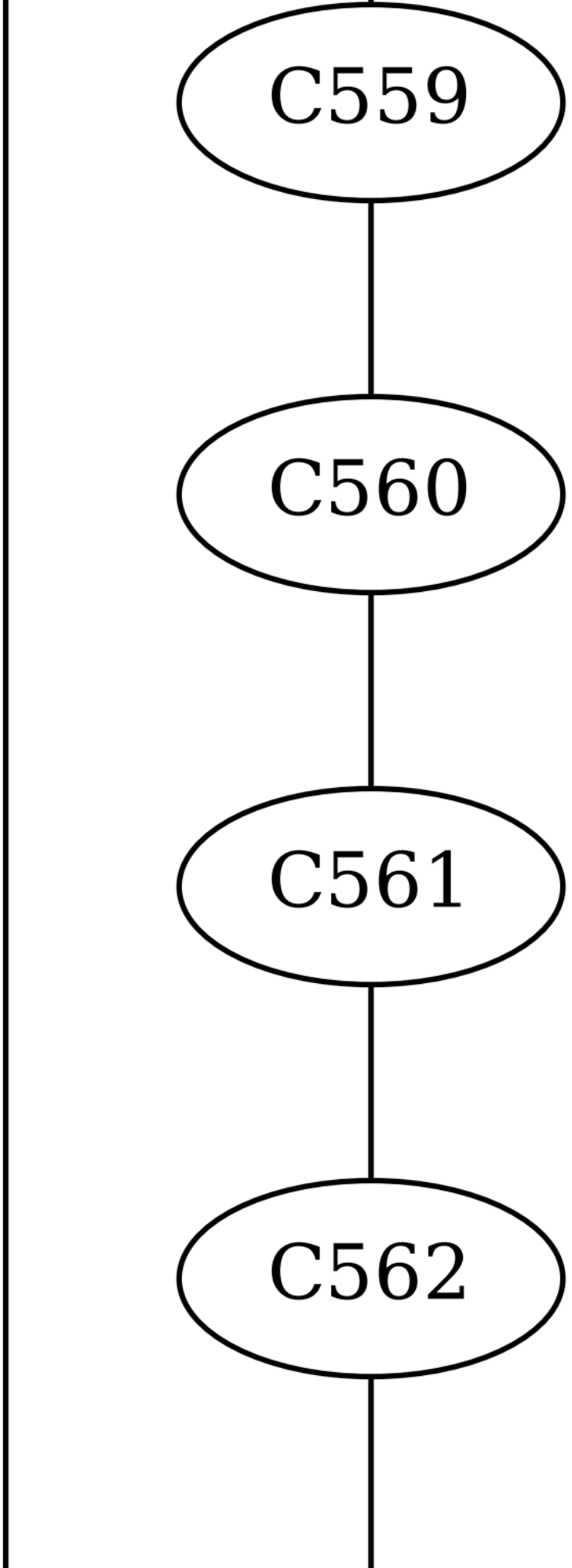
C559
C560
C561
C562

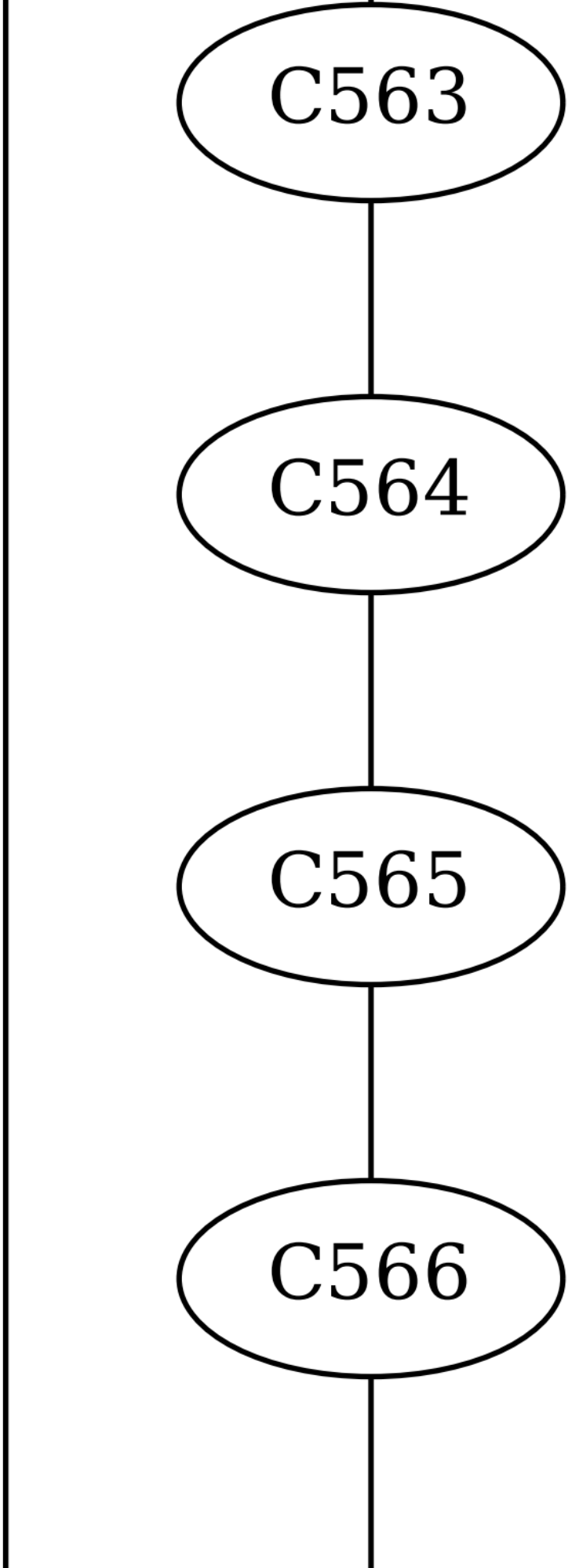
C563
C564
C565
C566

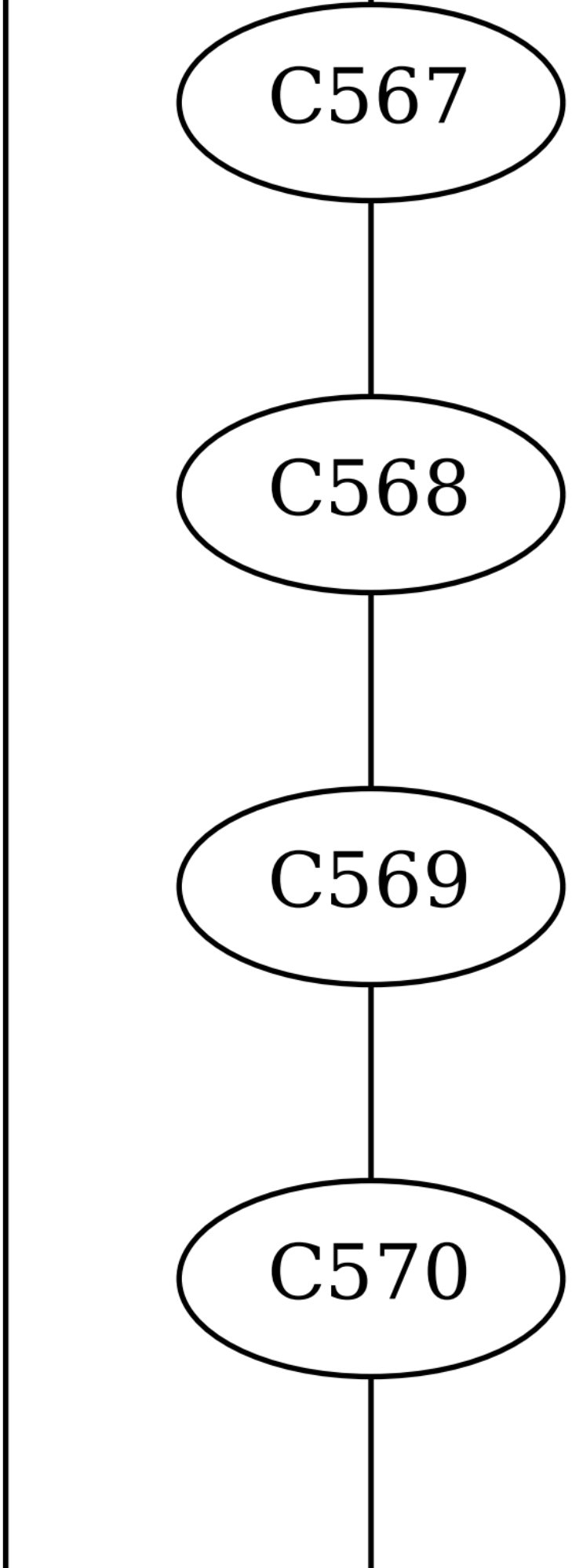
C567
C568
C569
C570

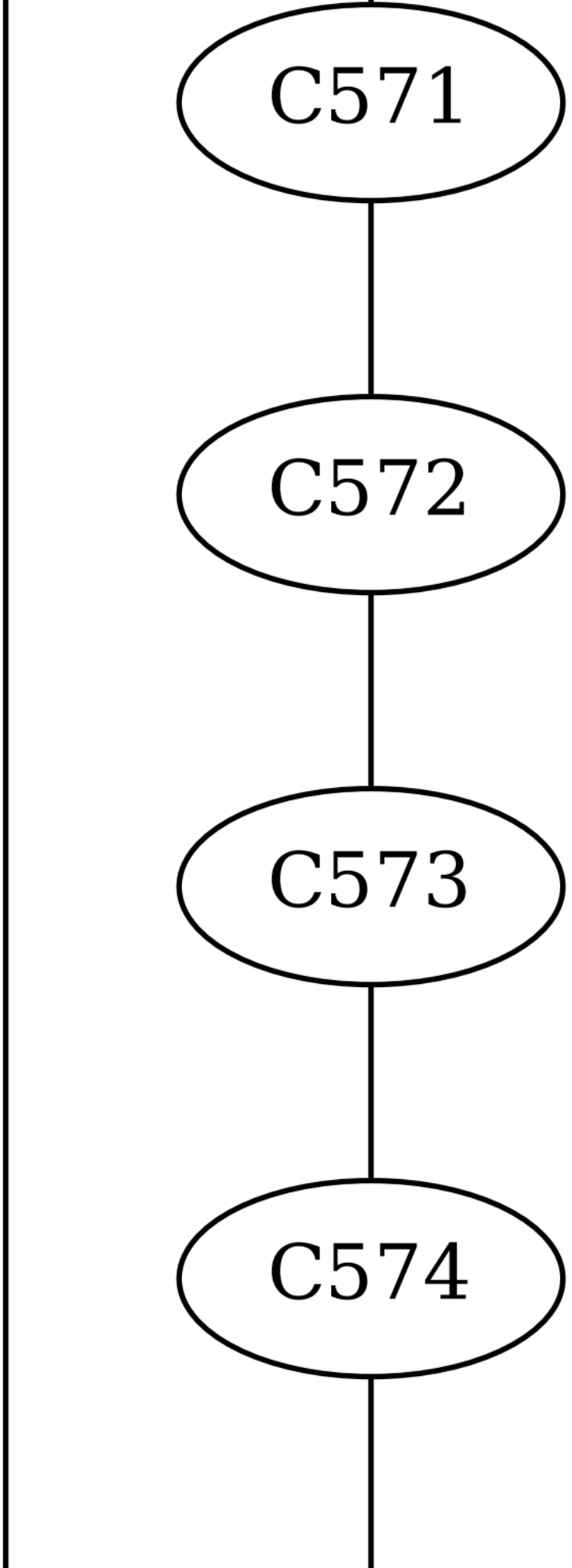
C571
C572
C573
C574

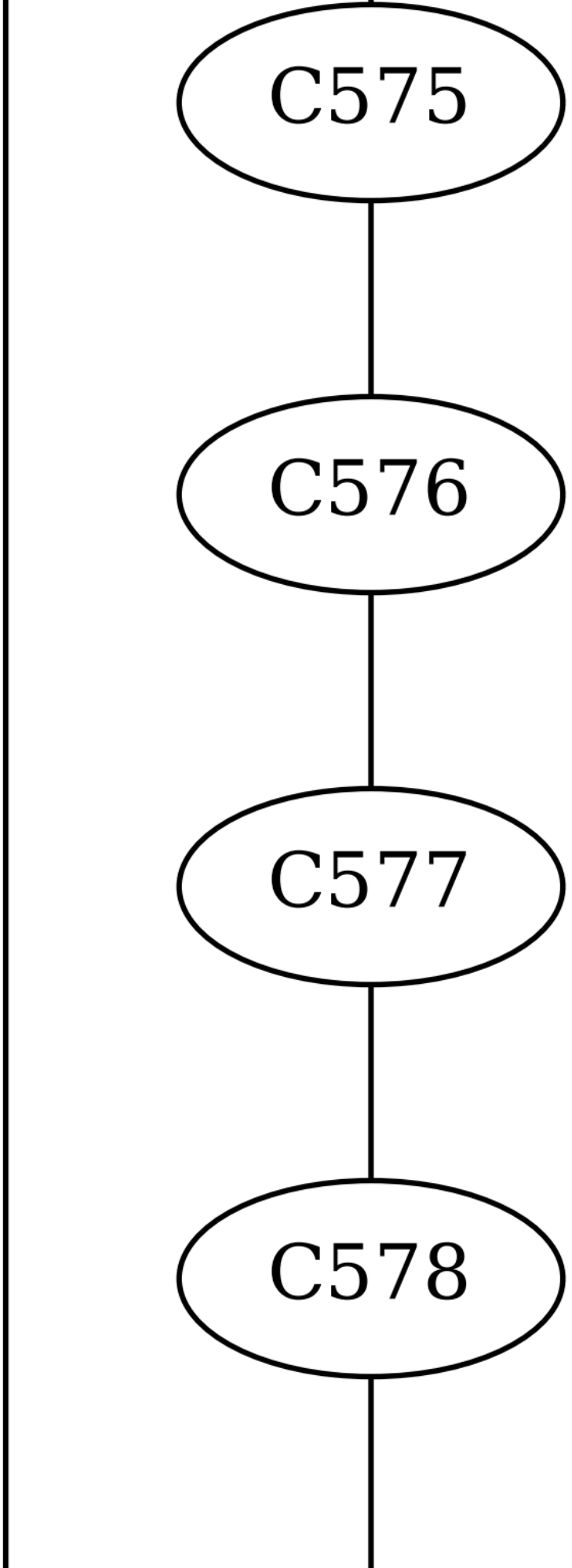
C575
C576
C577
C578

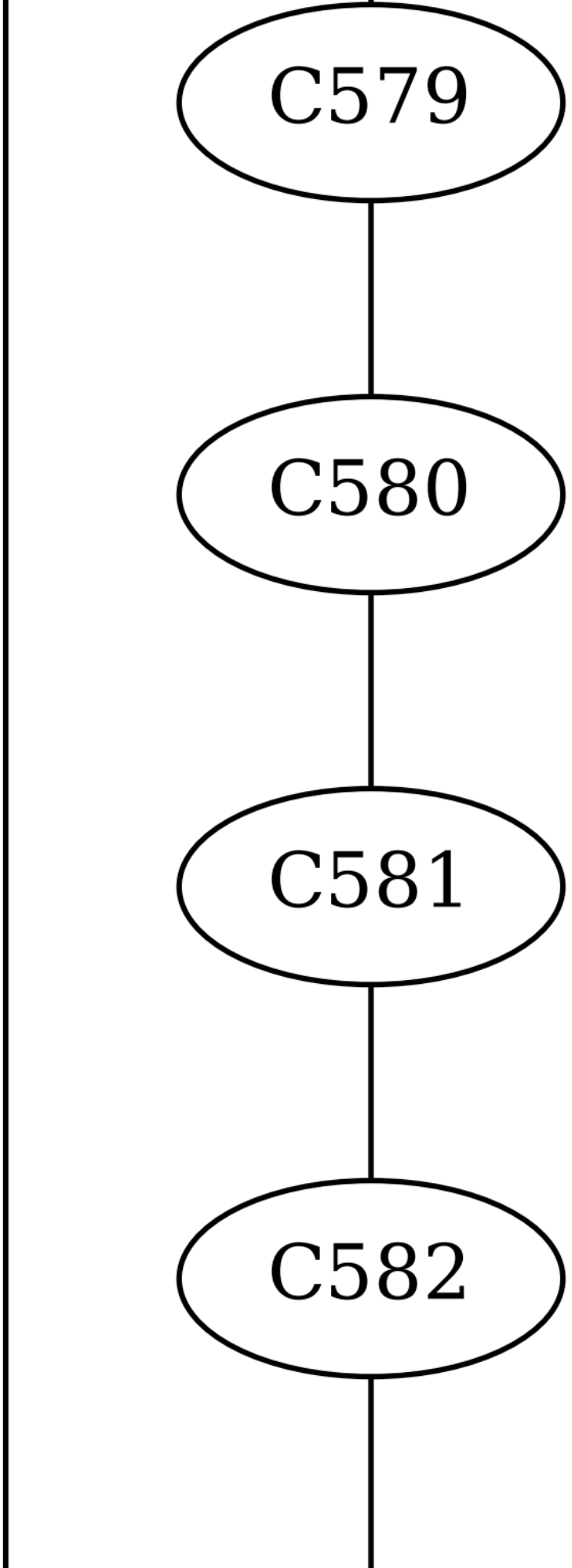
C579
C580
C581
C582

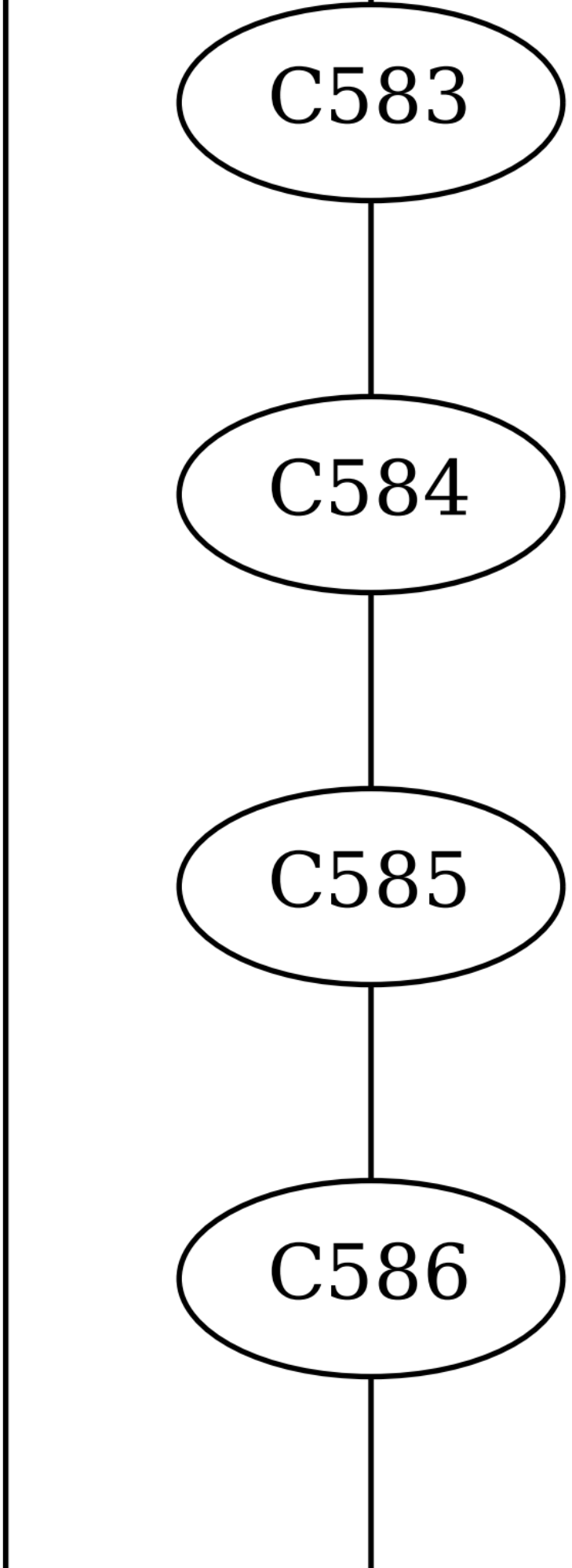
C583
C584
C585
C586

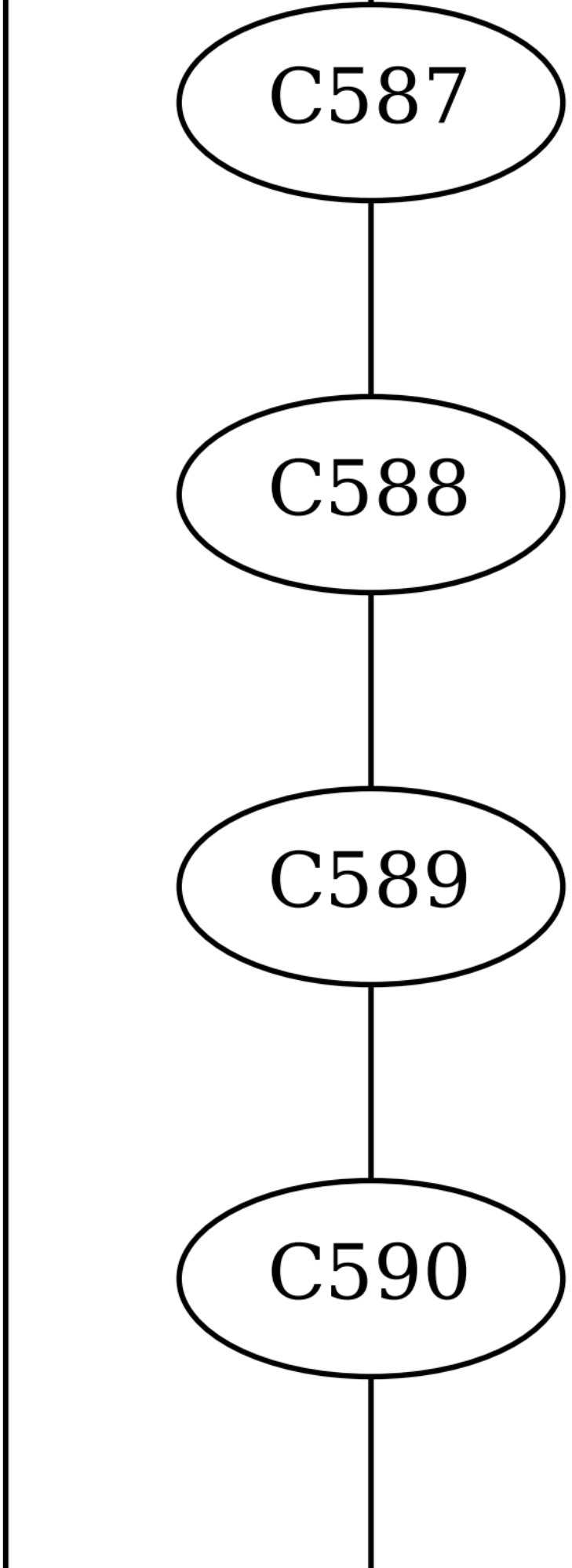
C587
C588
C589
C590

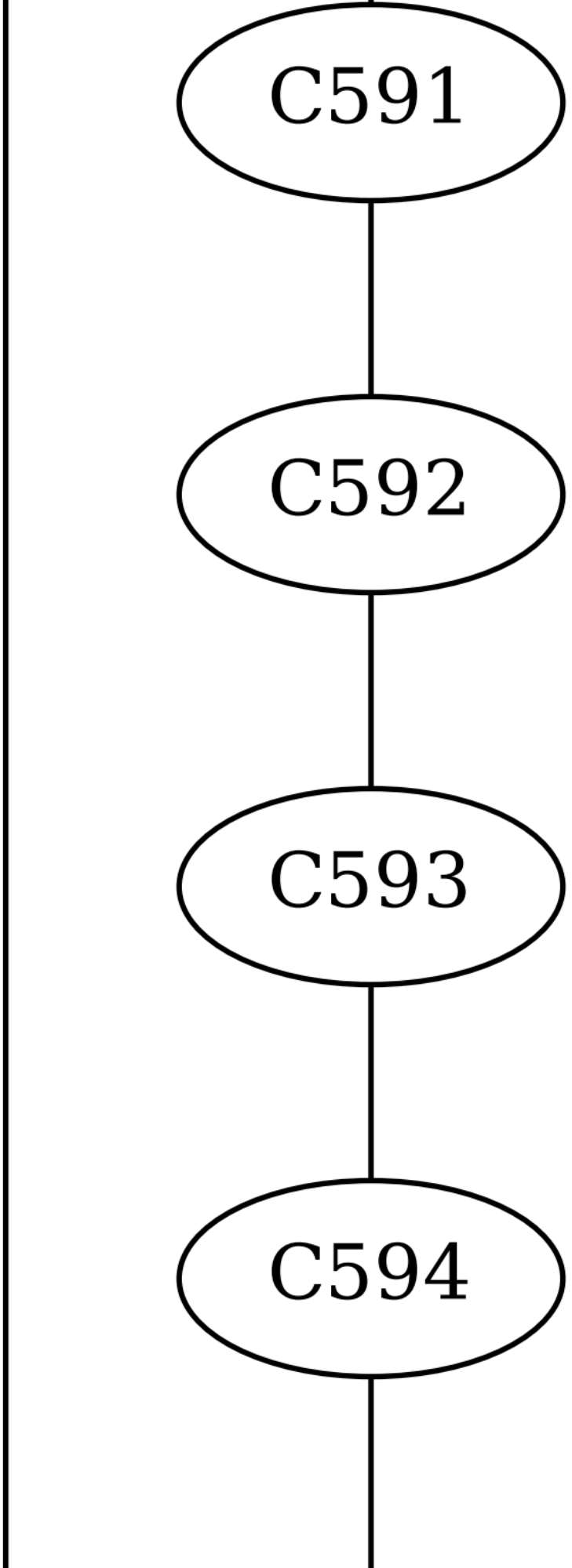
C591
C592
C593
C594

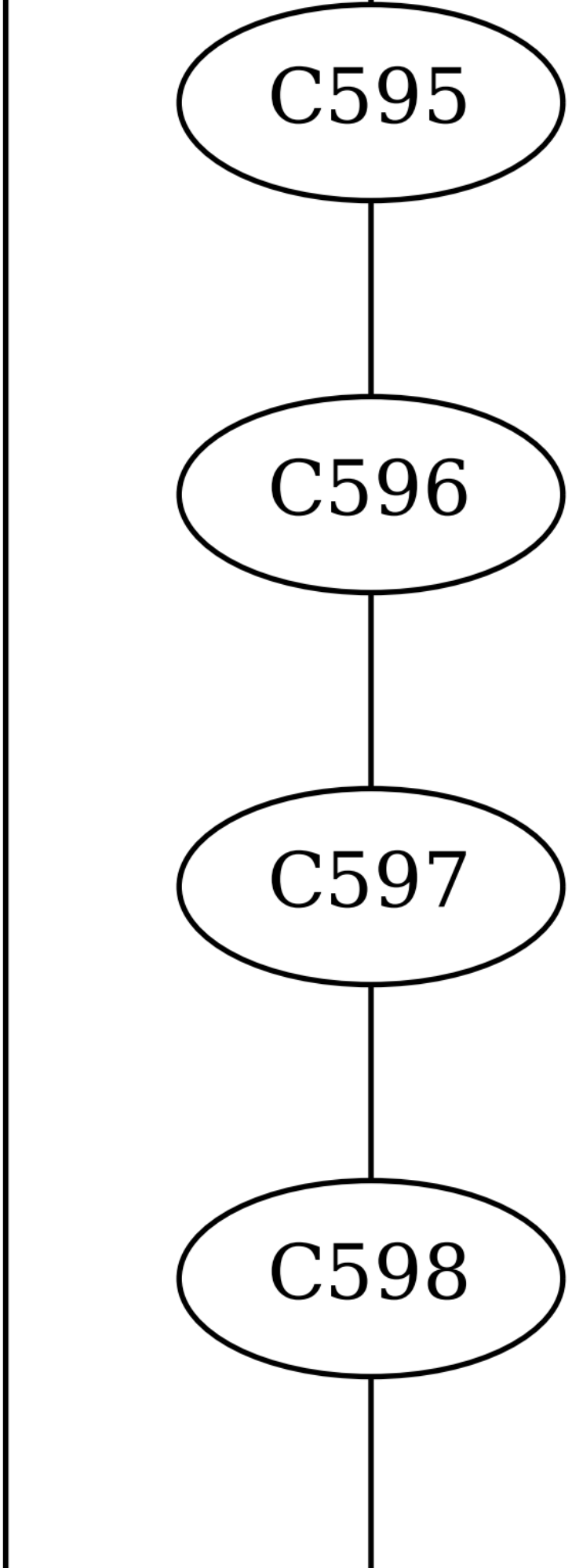
C595
C596
C597
C598

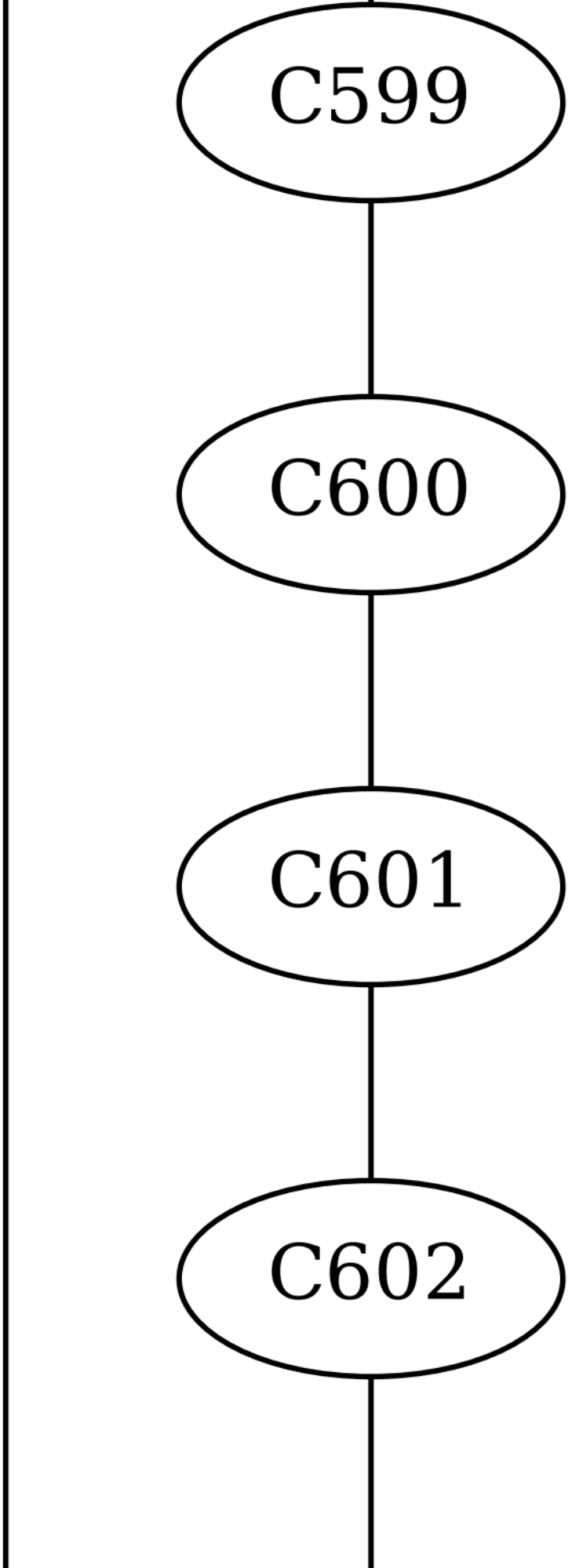
C599
C600
C601
C602

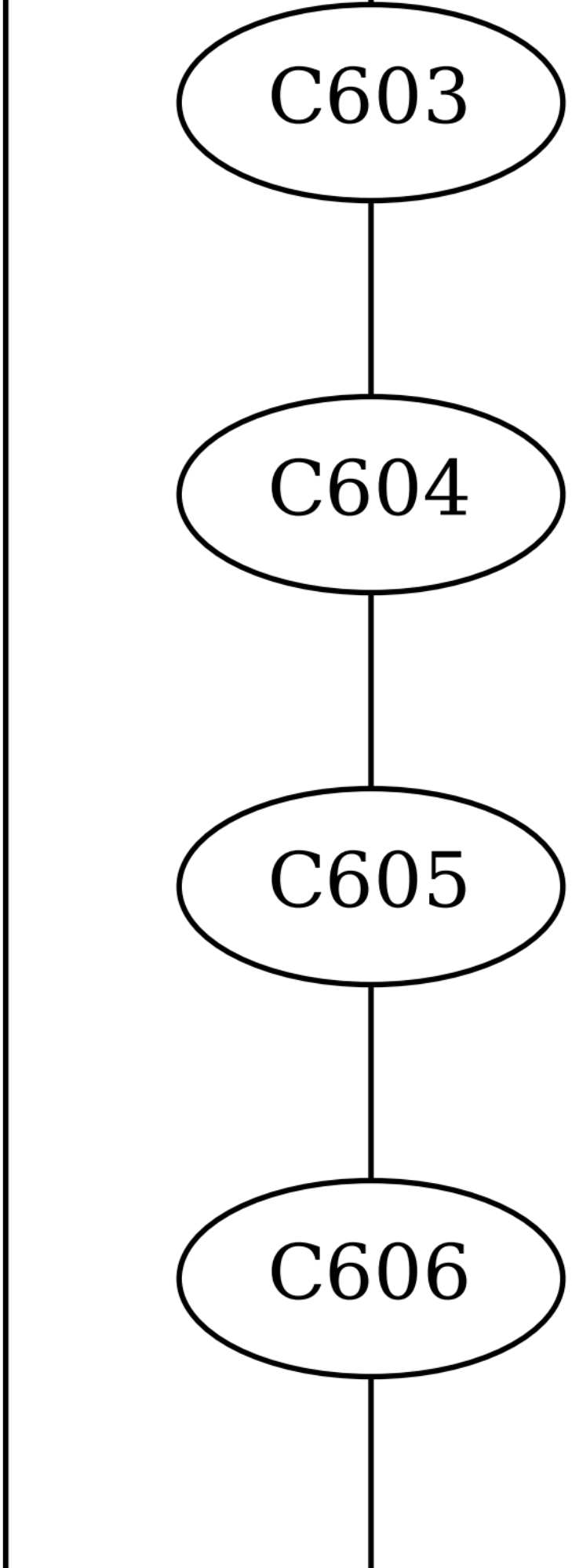
C603
C604
C605
C606

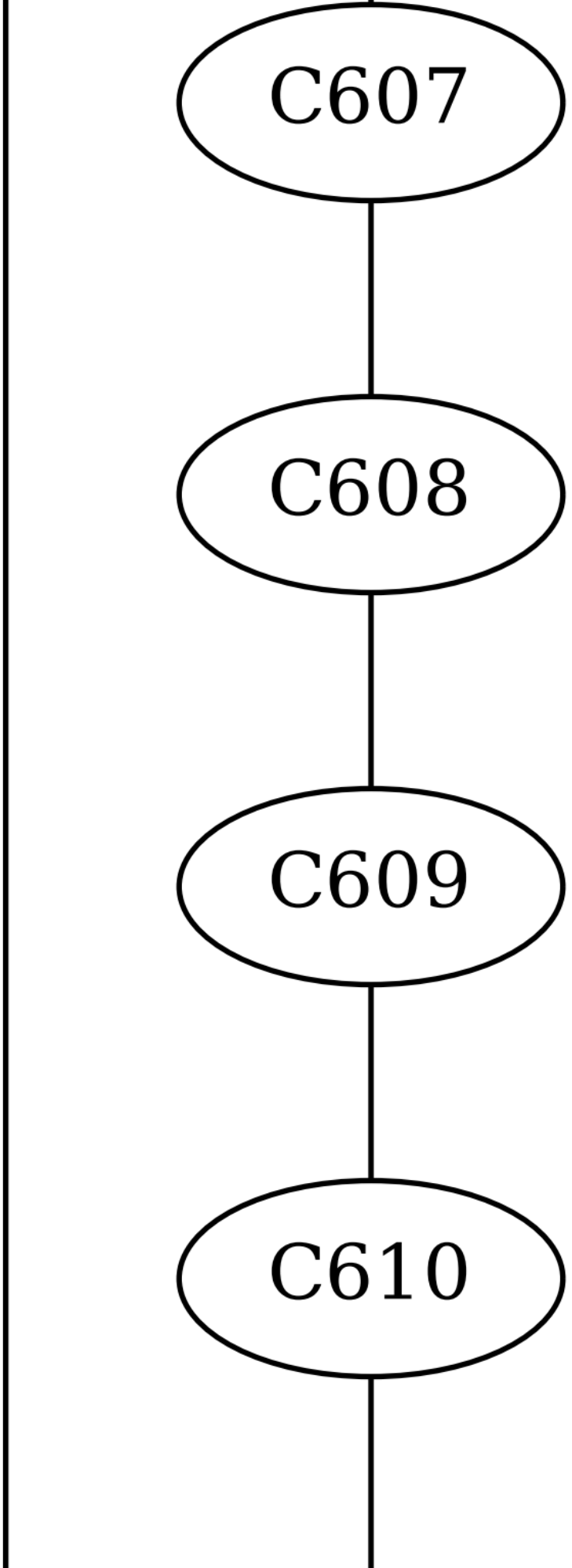
C607
C608
C609
C610

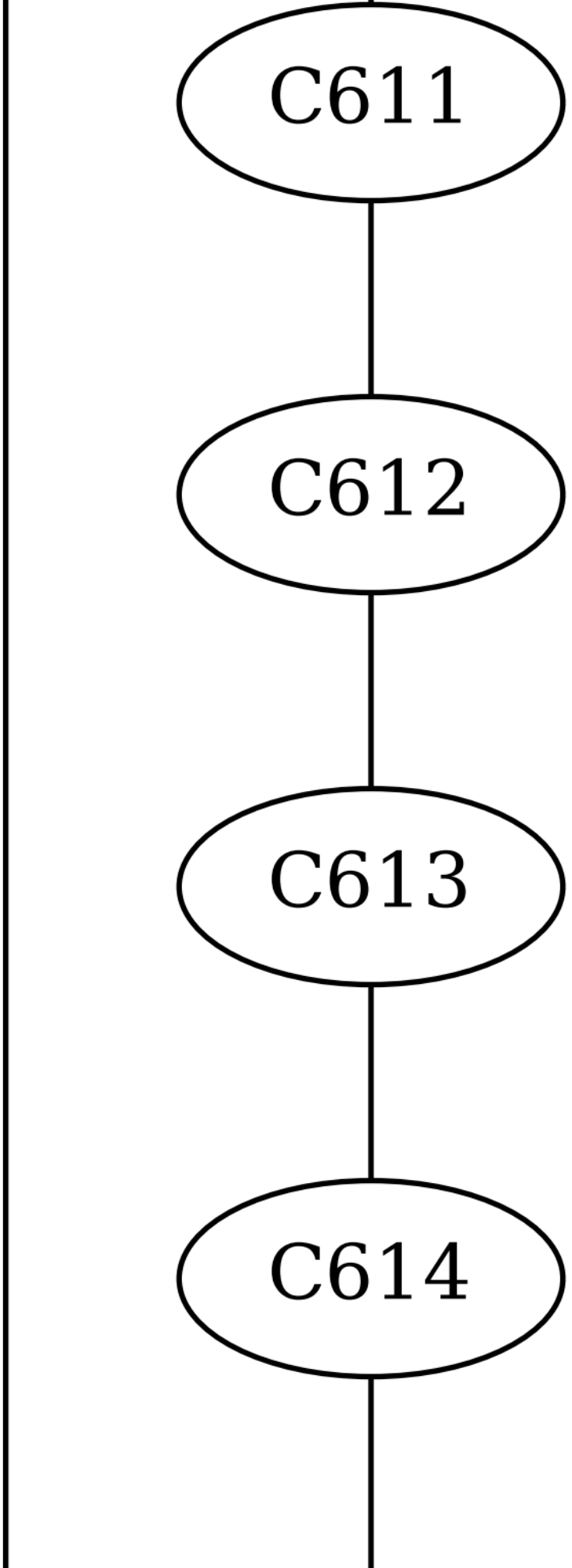
C611
C612
C613
C614

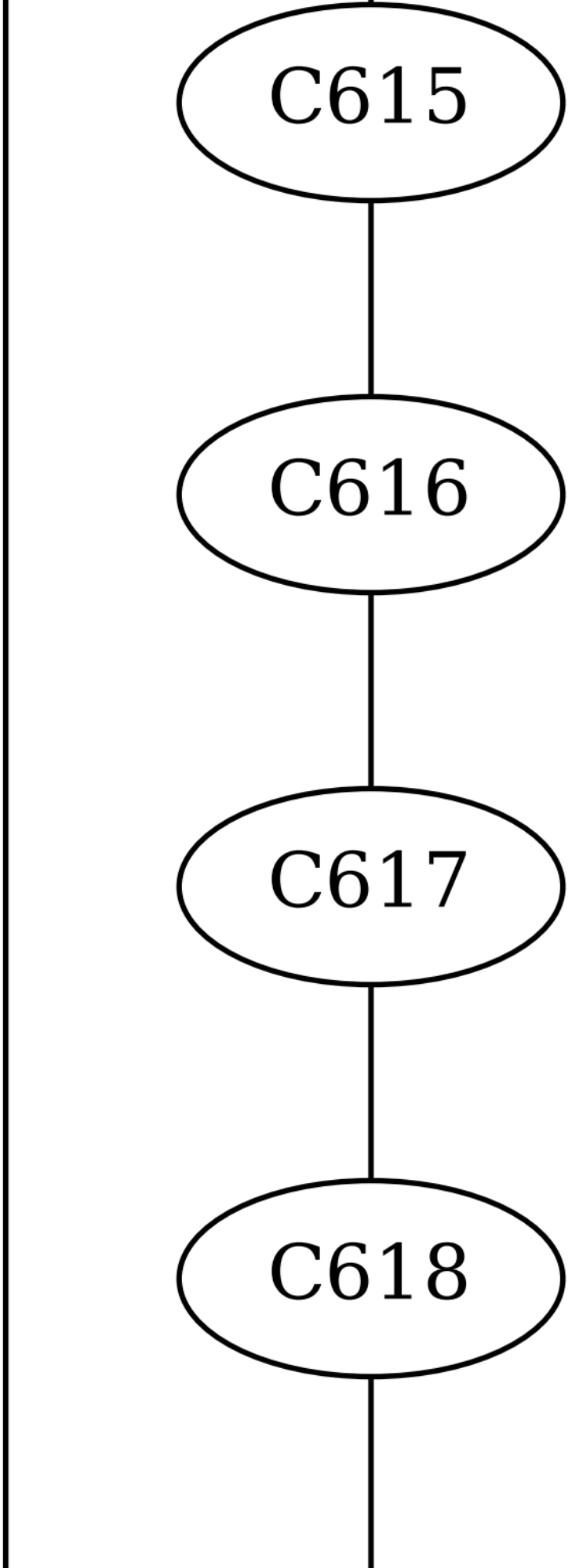
C615
C616
C617
C618

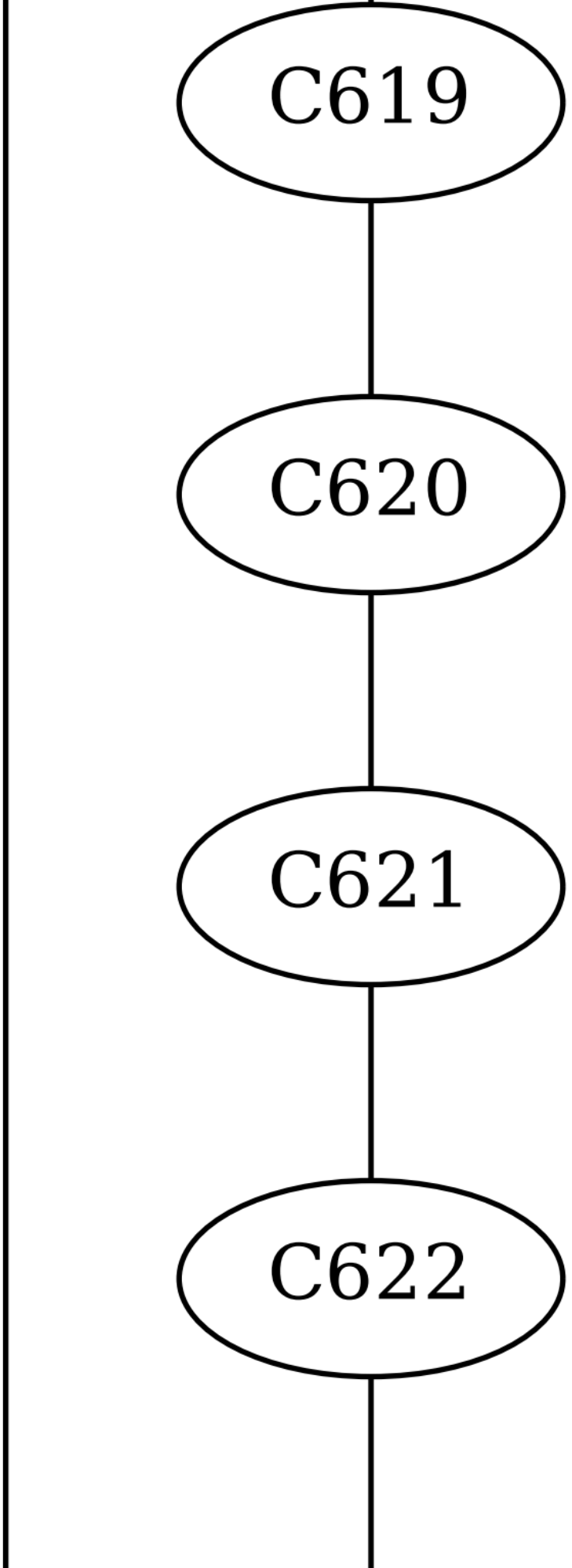
C619
C620
C621
C622

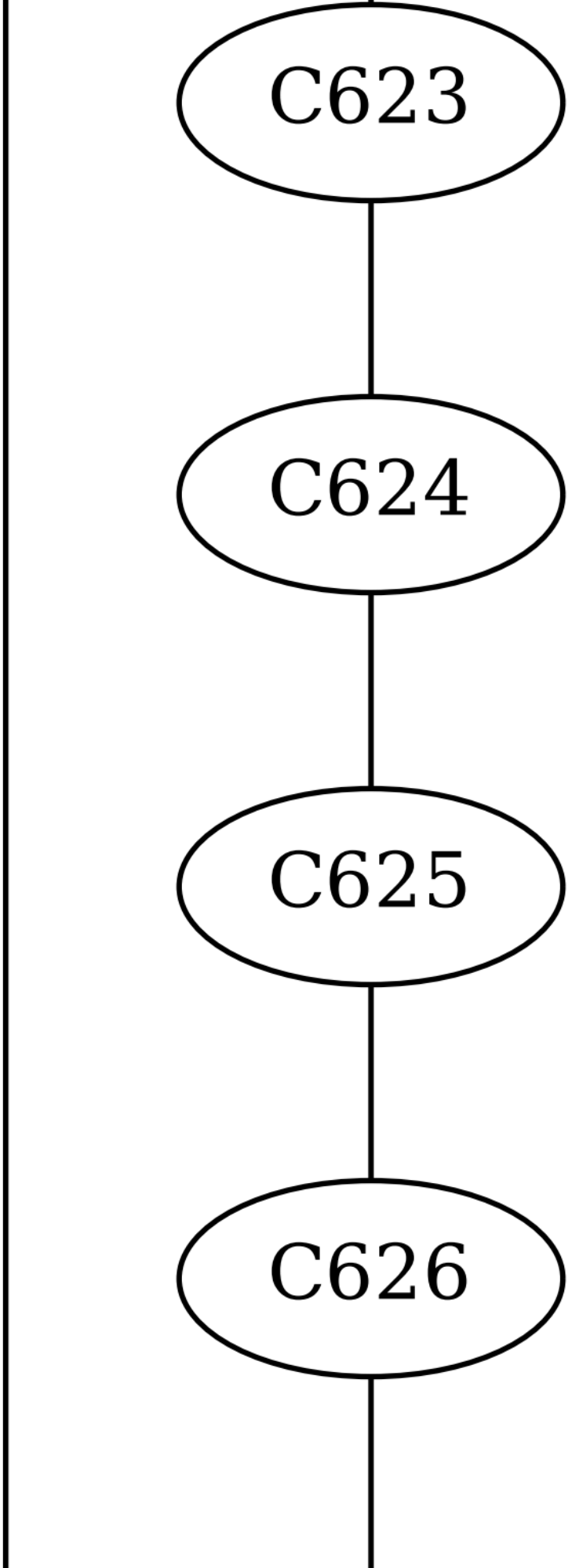
C623
C624
C625
C626

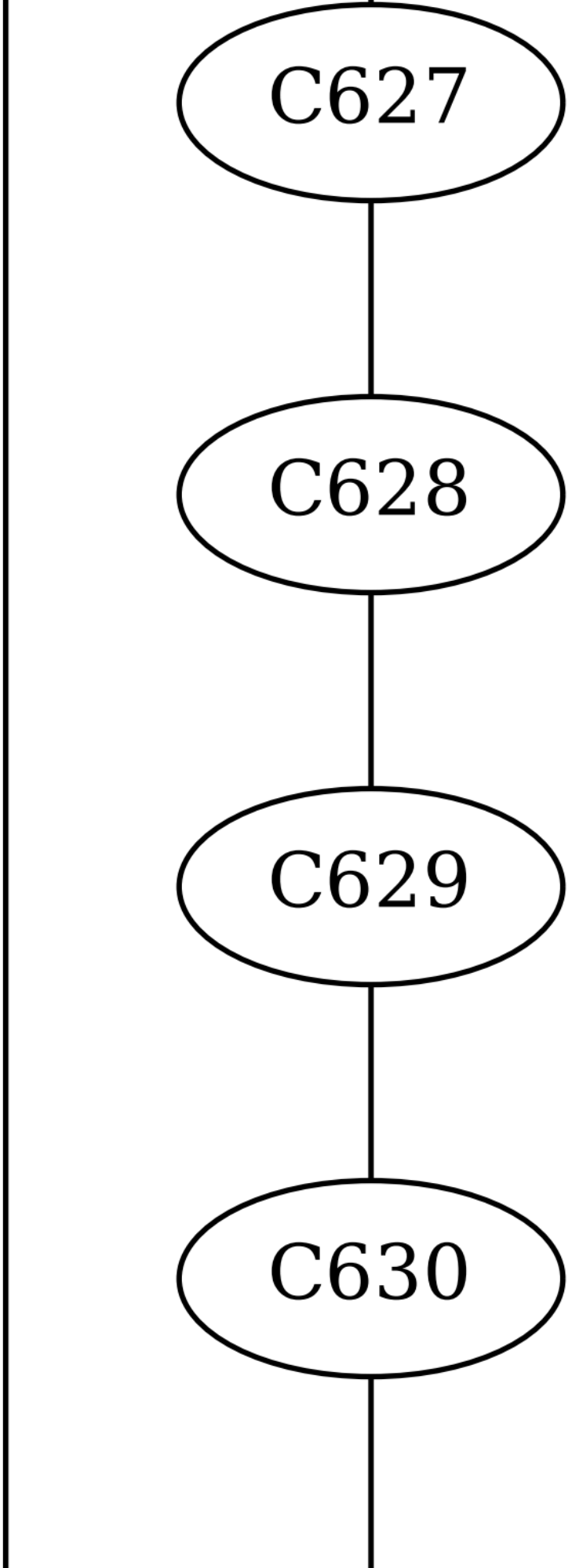
C627
C628
C629
C630

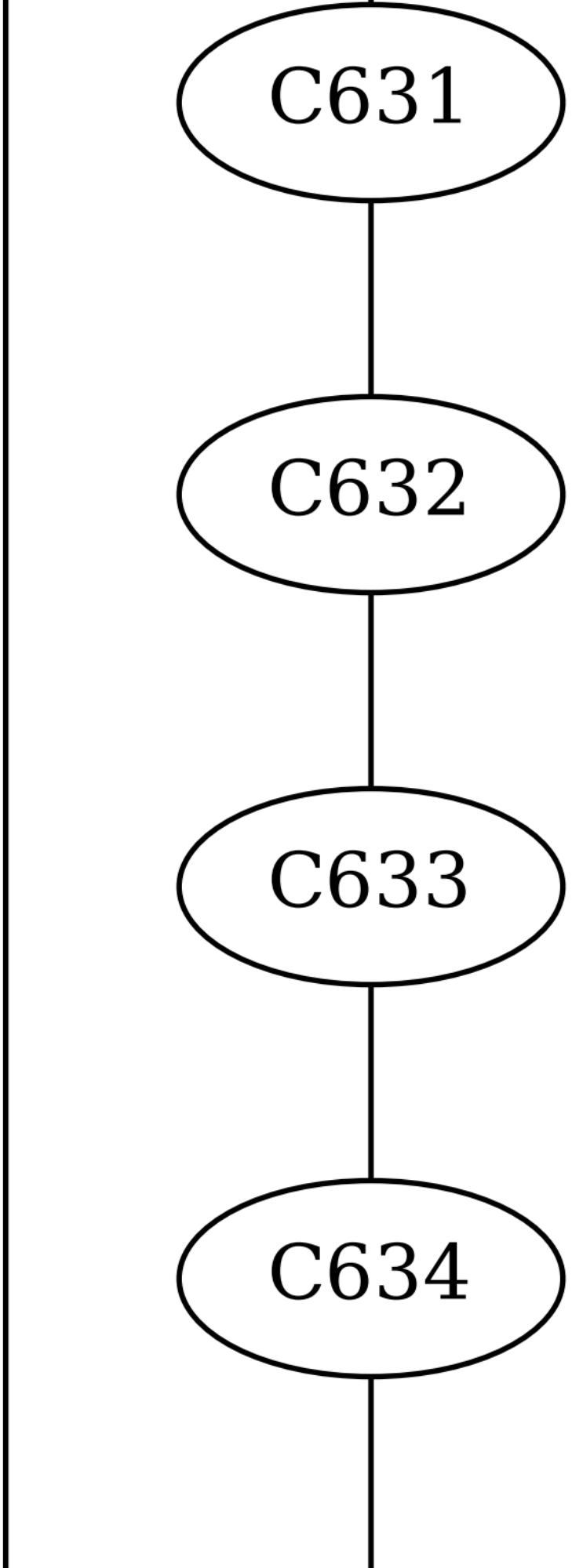
C631
C632
C633
C634

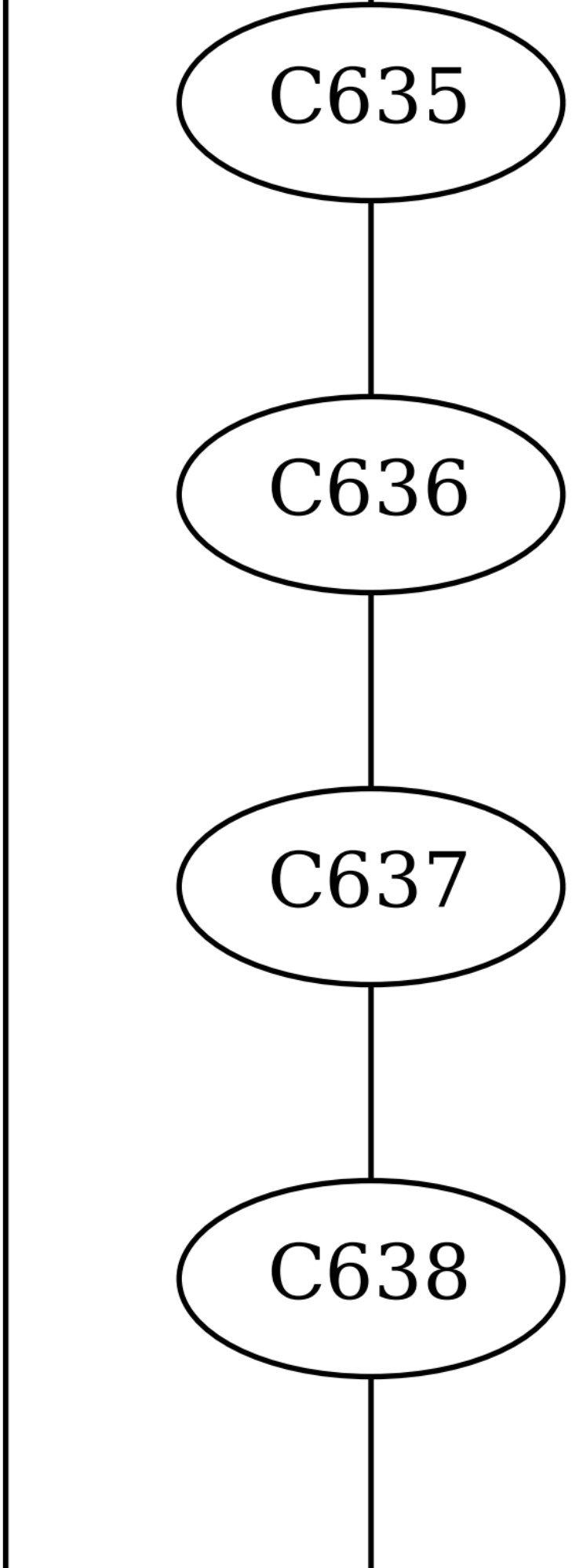
C635
C636
C637
C638

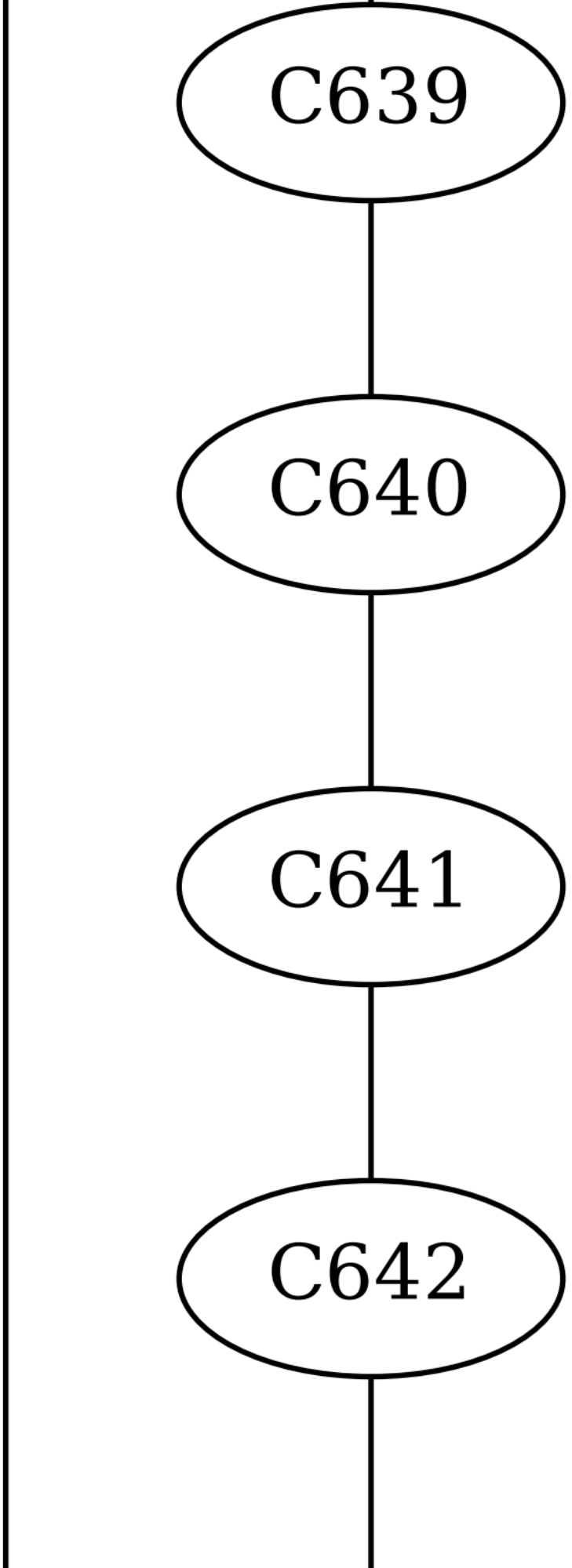
C639
C640
C641
C642

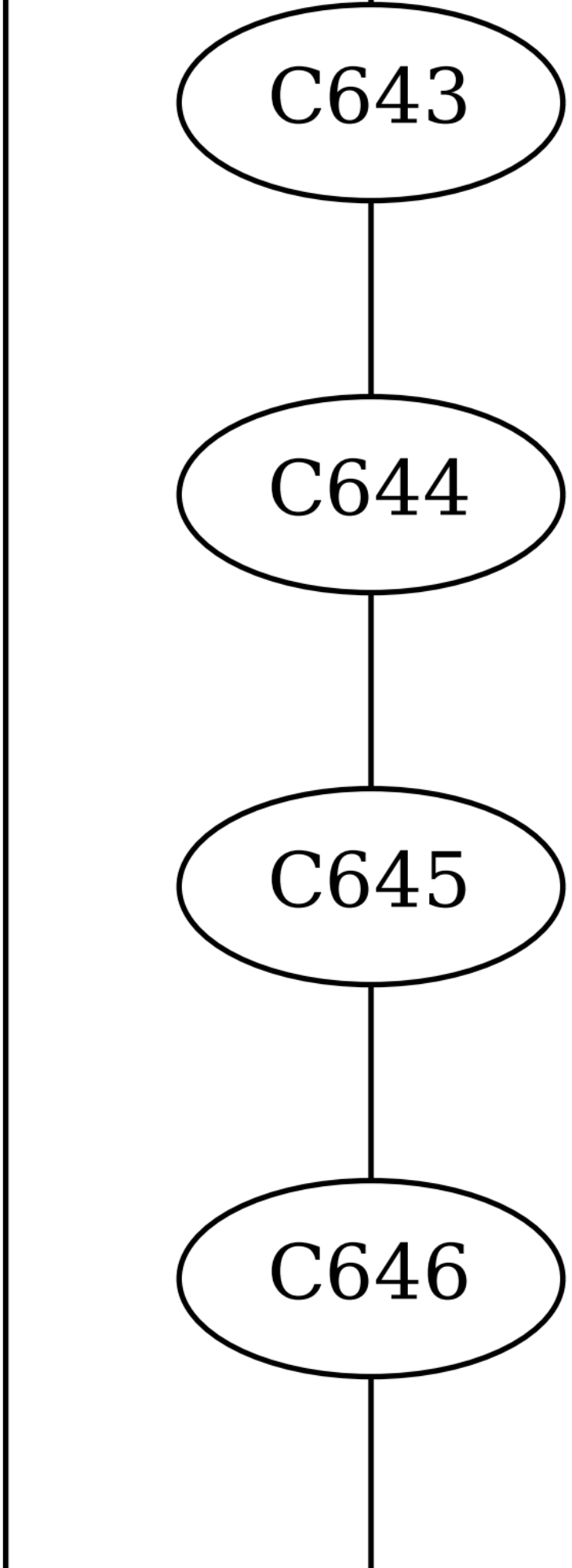
C643
C644
C645
C646

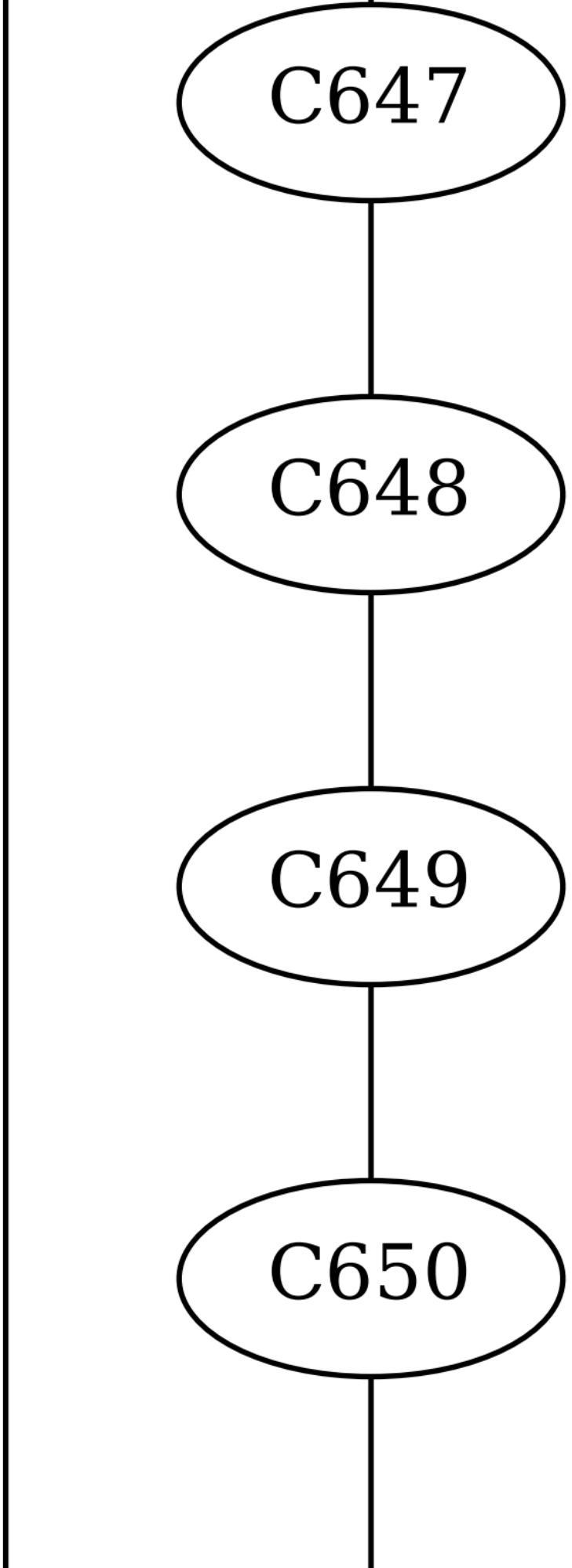
C647
C648
C649
C650

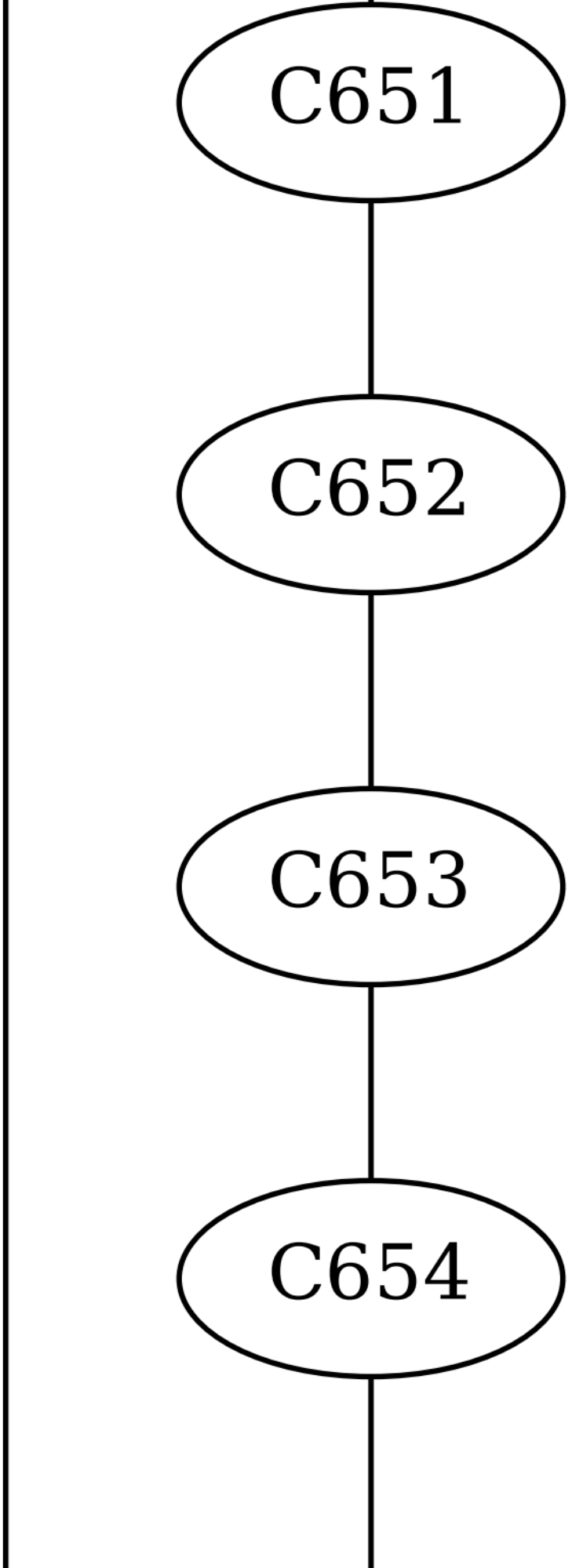
C651
C652
C653
C654

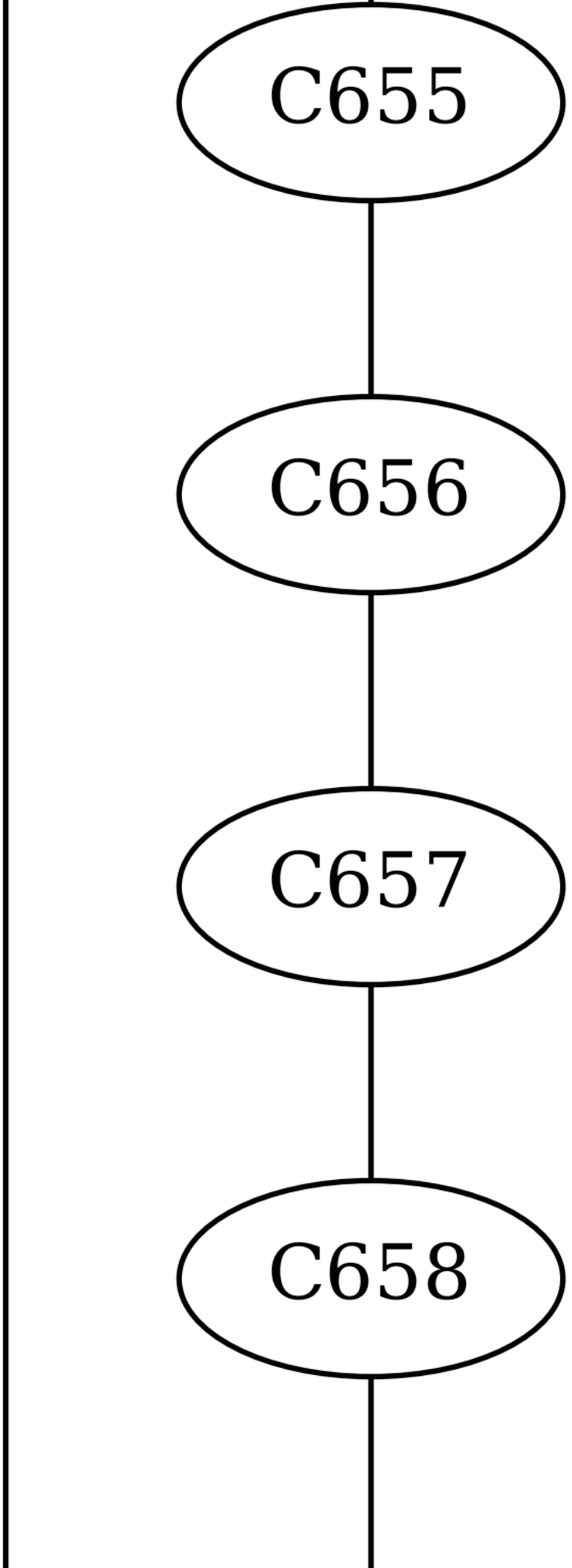
C655
C656
C657
C658

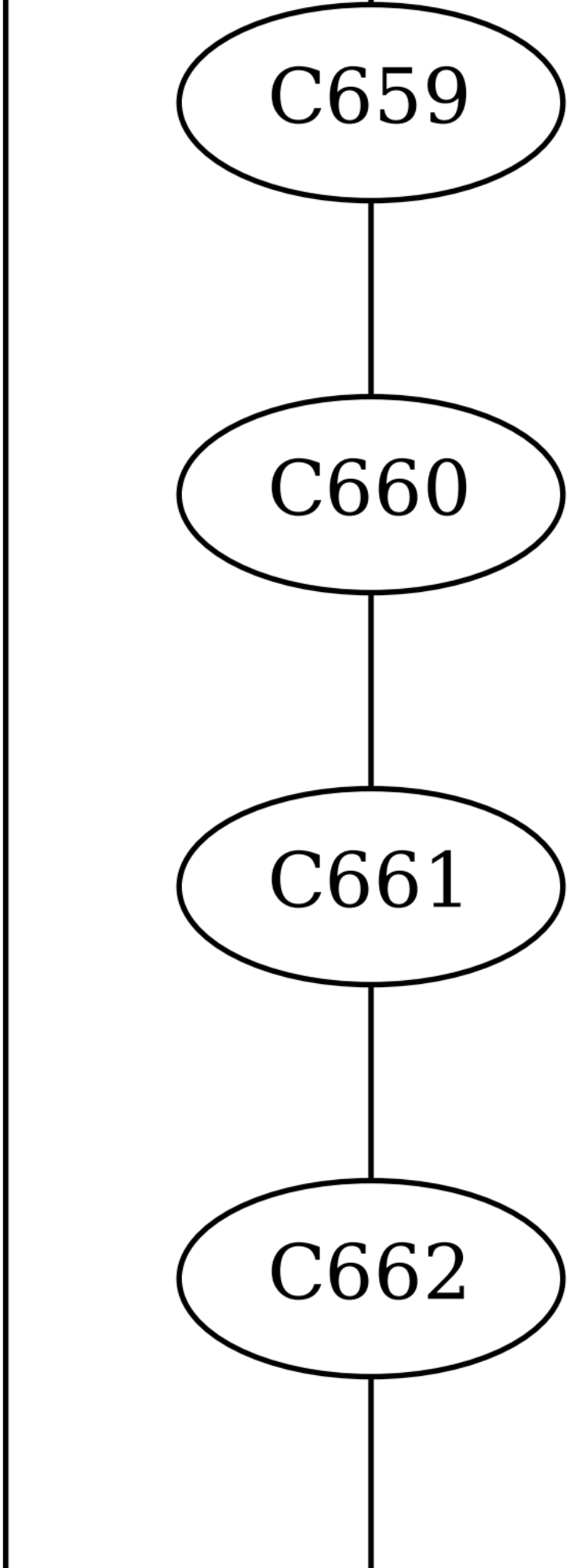
C659
C660
C661
C662

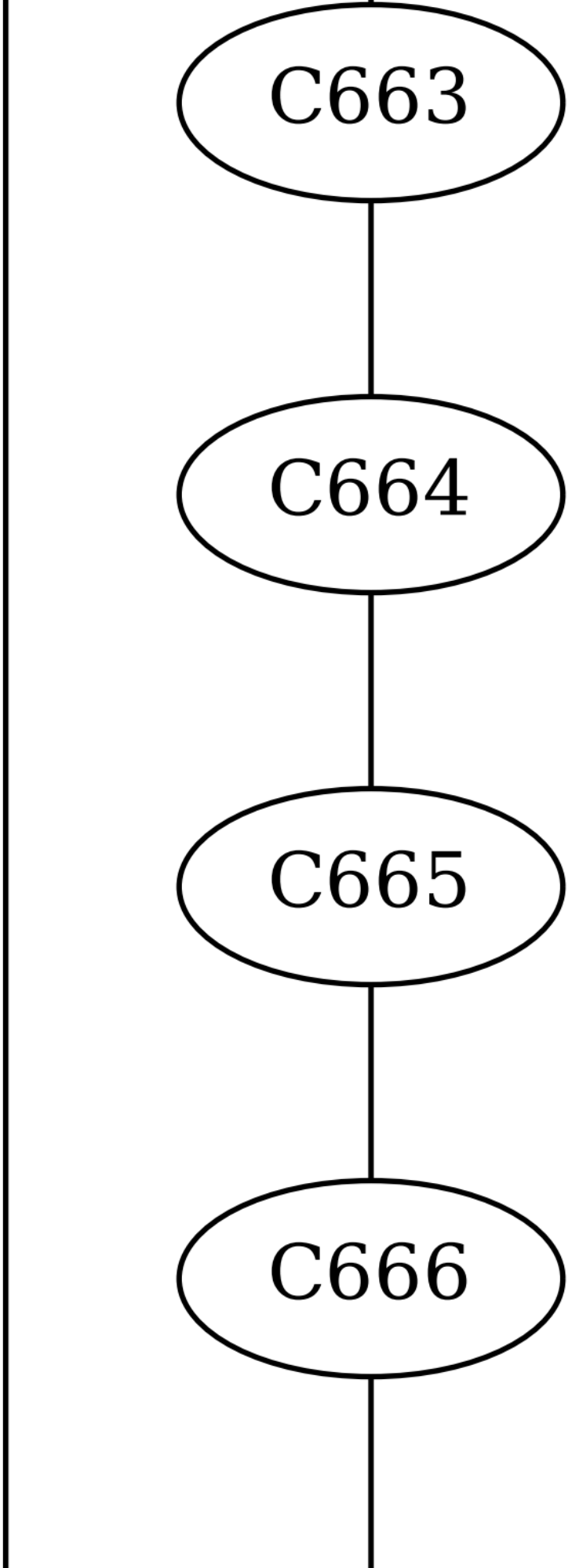
C663
C664
C665
C666

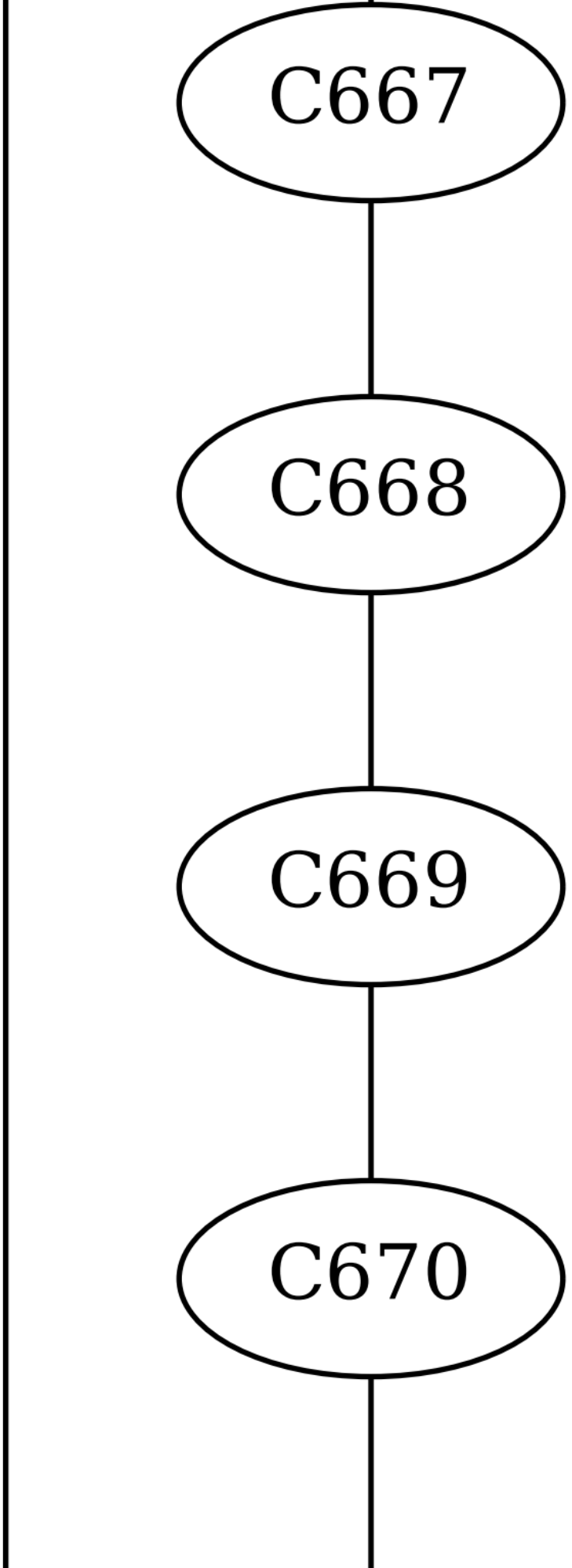
C667
C668
C669
C670

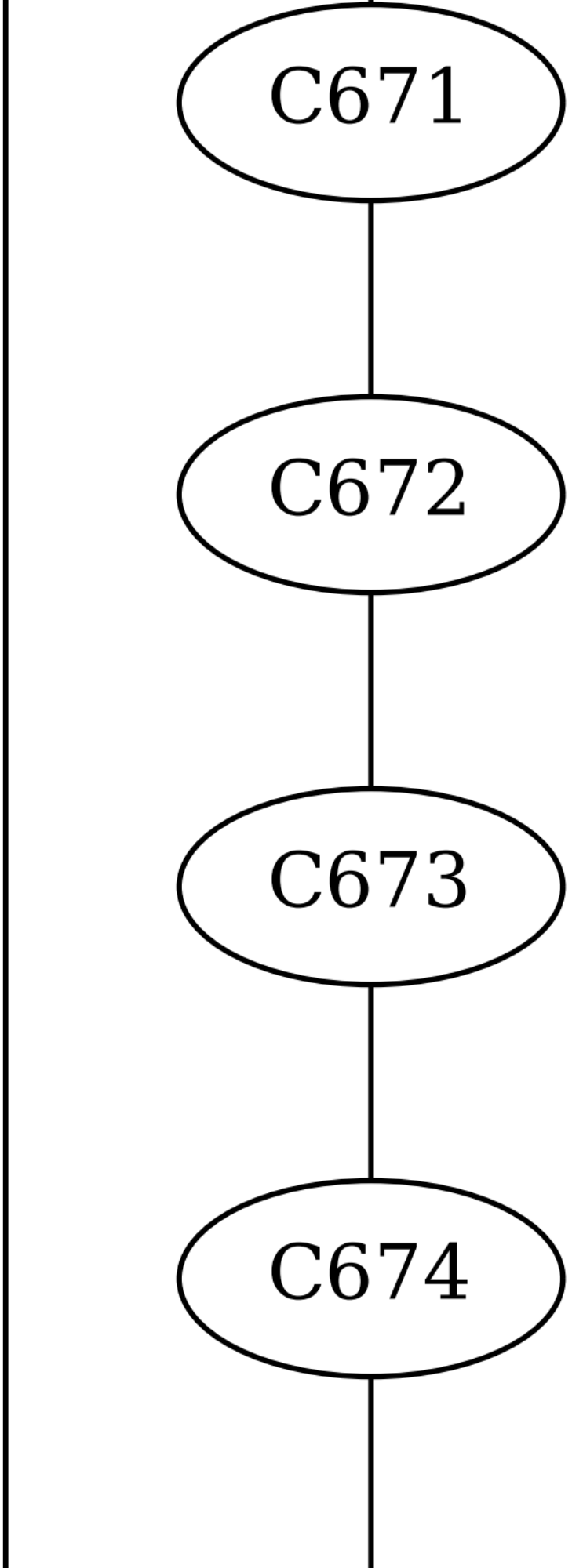
C671
C672
C673
C674

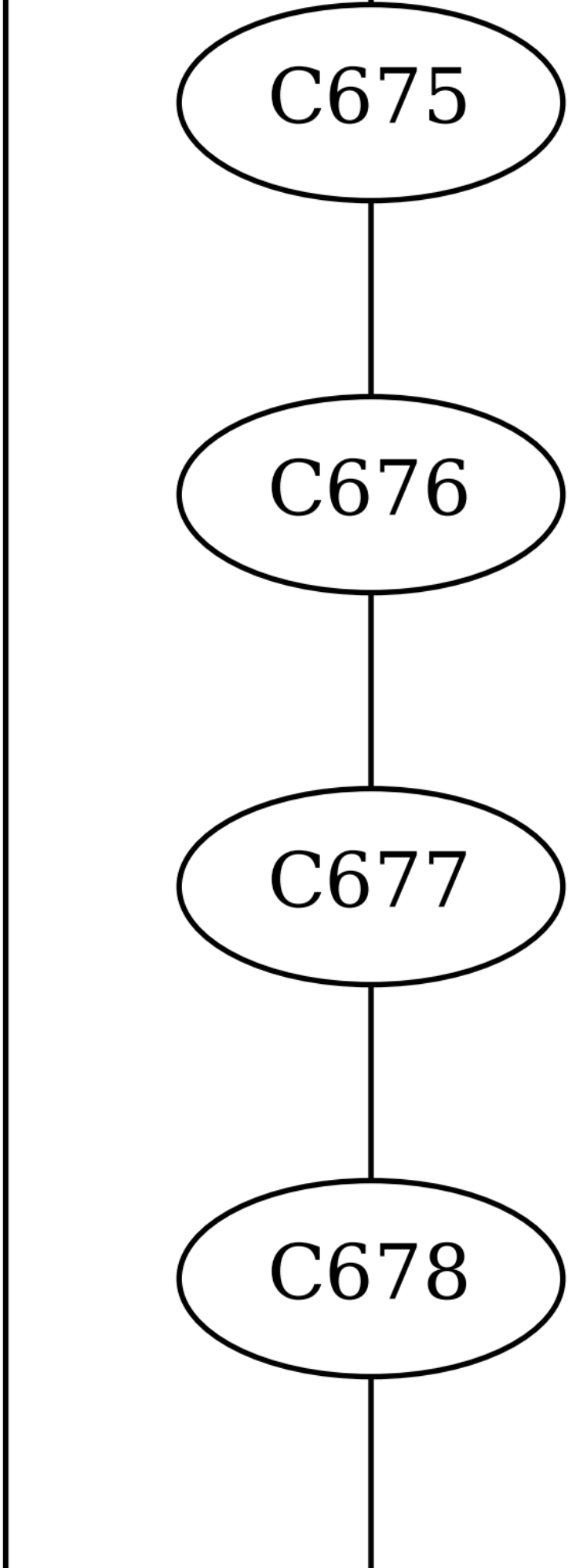
C675
C676
C677
C678

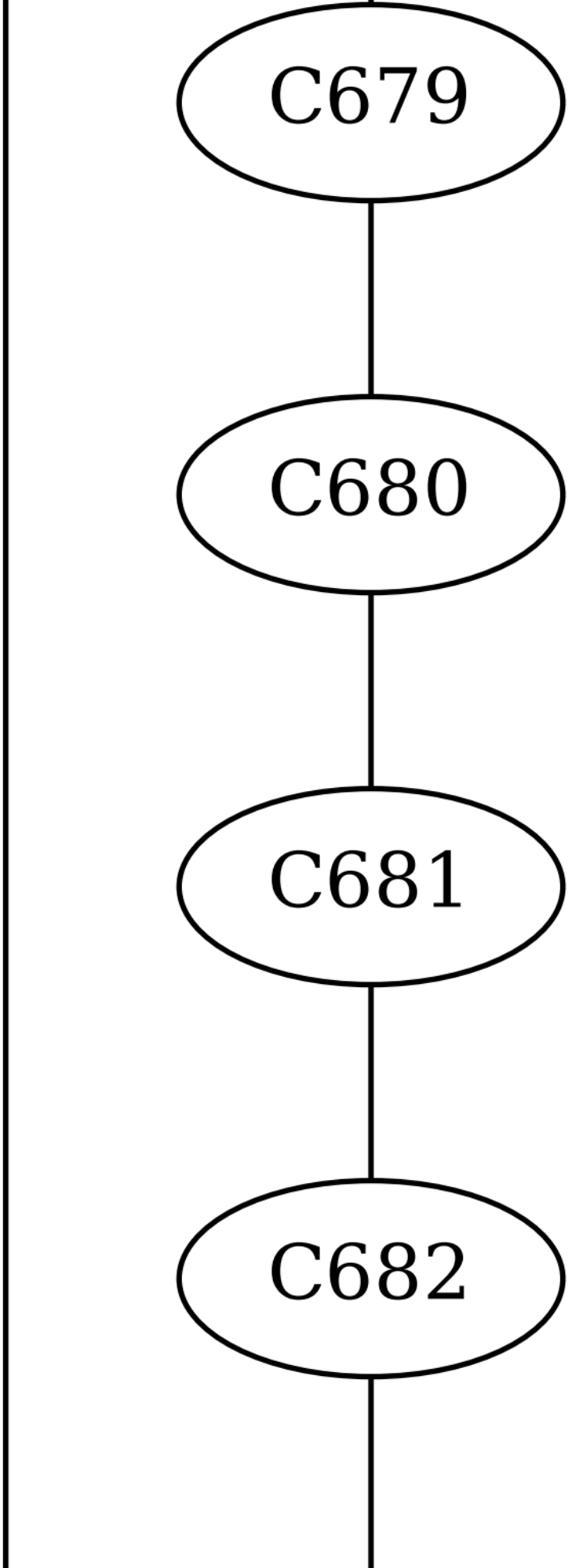
C679
C680
C681
C682

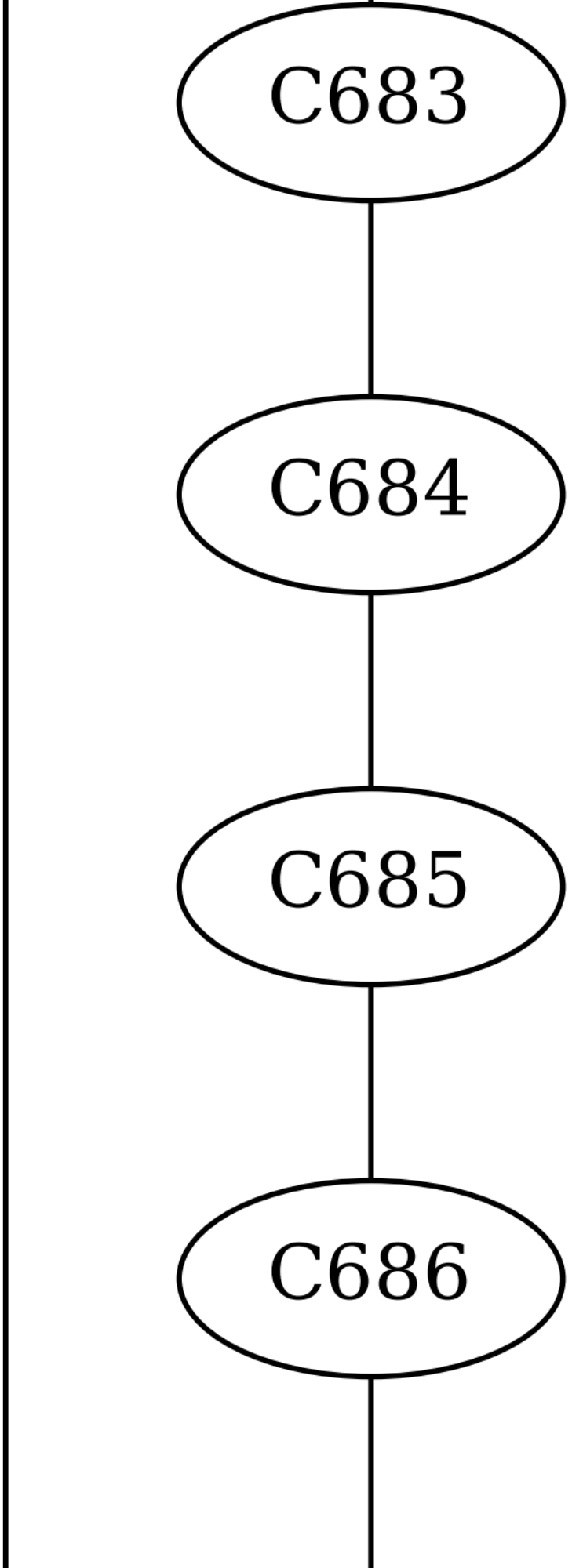
C683
C684
C685
C686

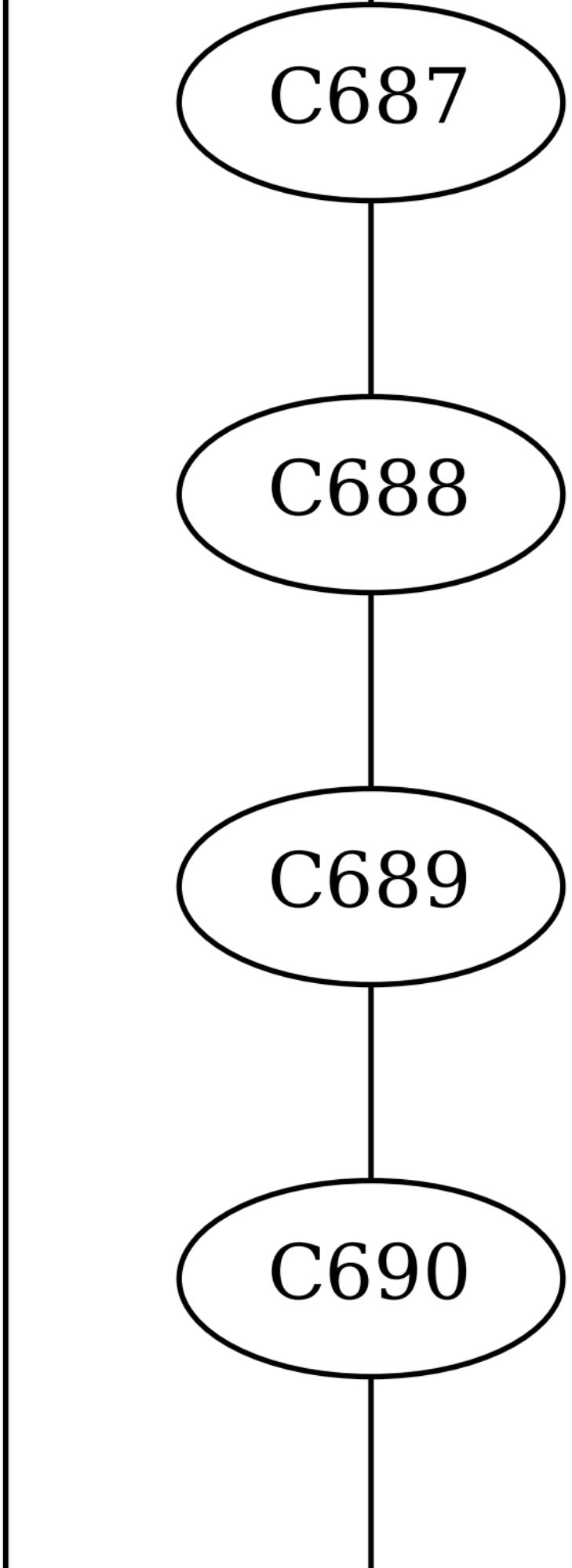
C687
C688
C689
C690

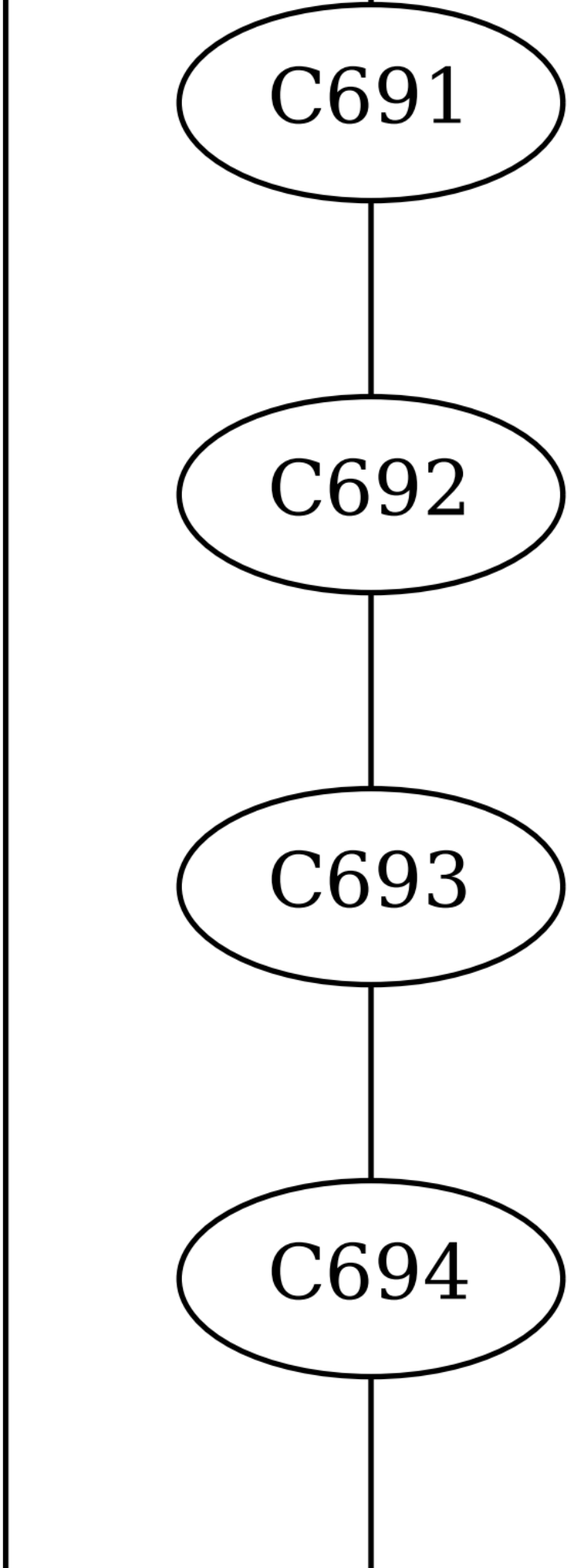
C691
C692
C693
C694

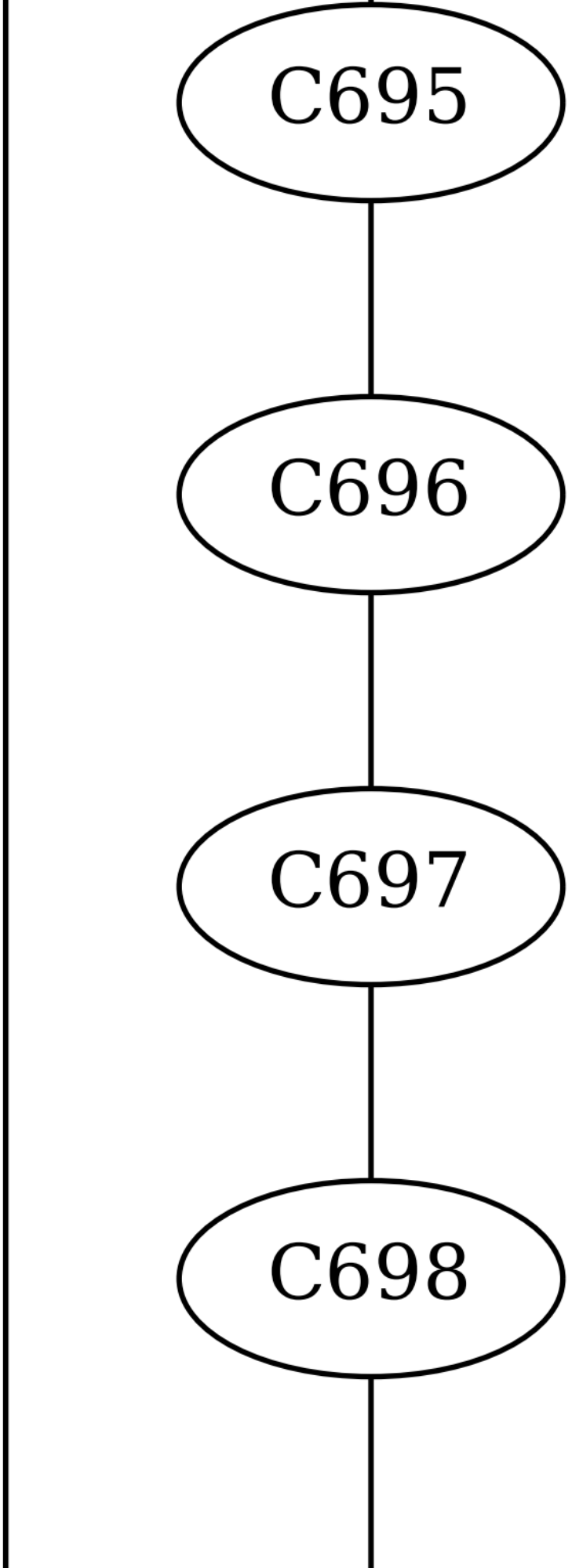
C695
C696
C697
C698

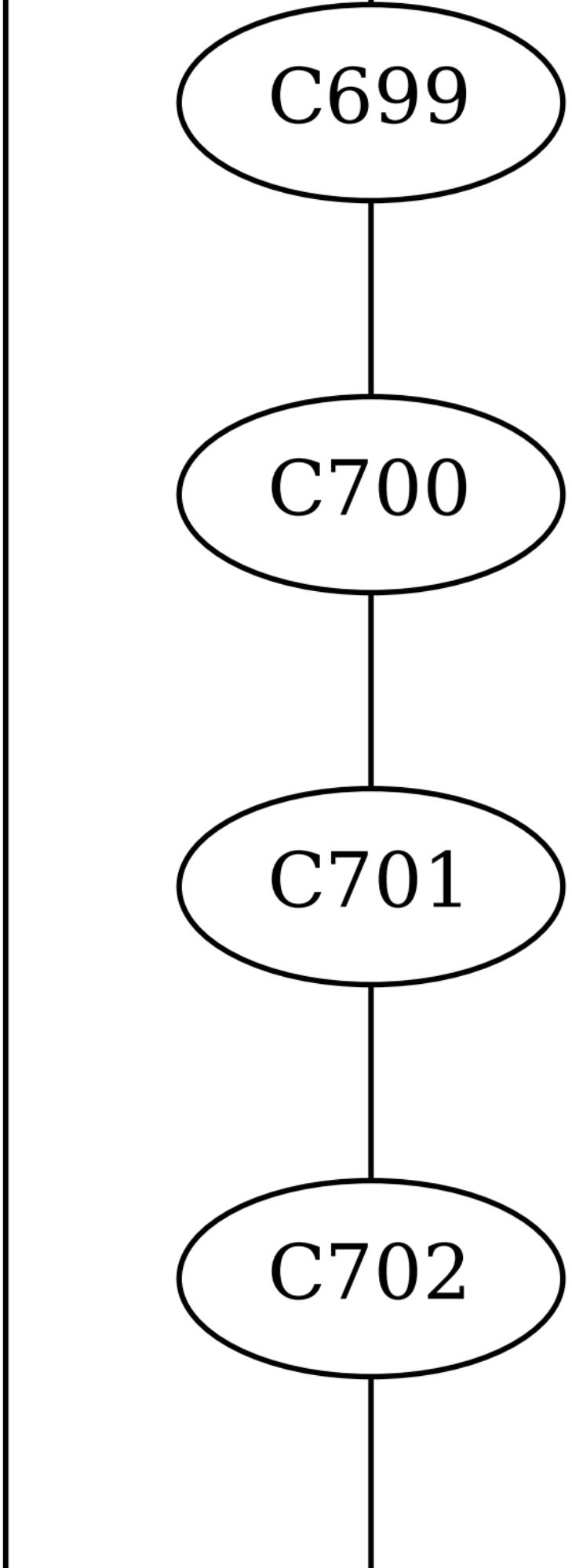
C699
C700
C701
C702

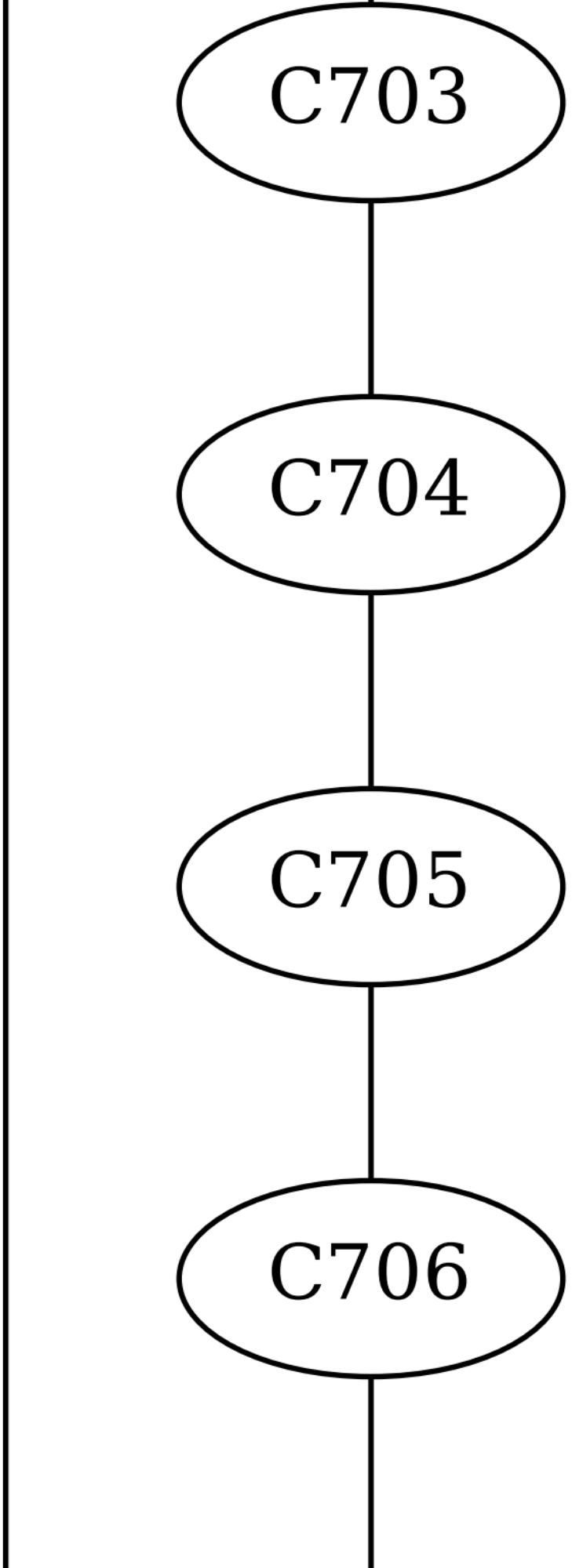
C703
C704
C705
C706

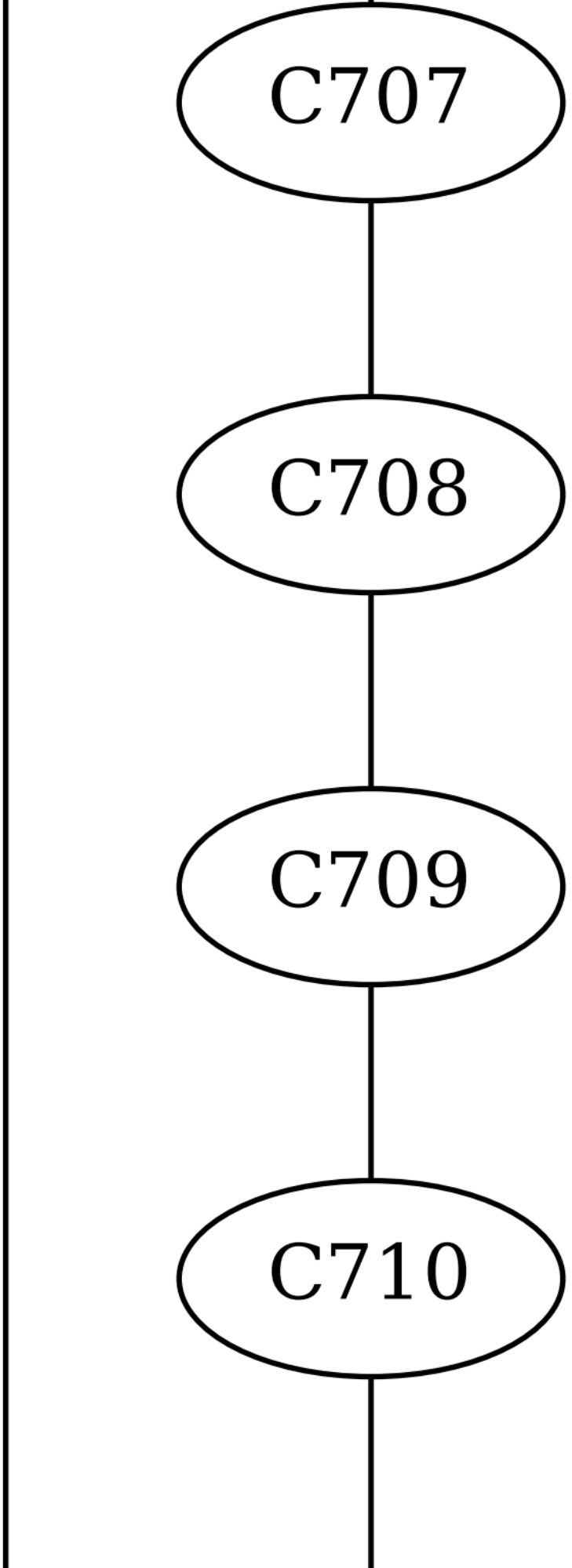
C707
C708
C709
C710

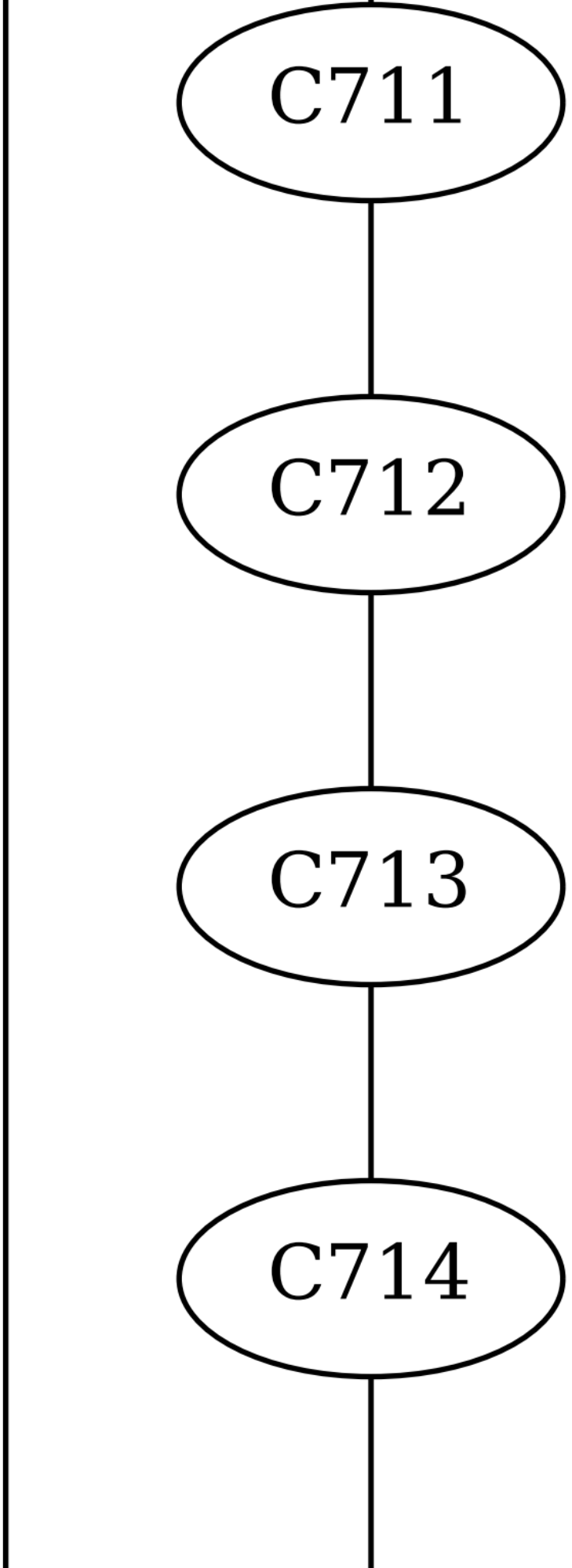
C711
C712
C713
C714

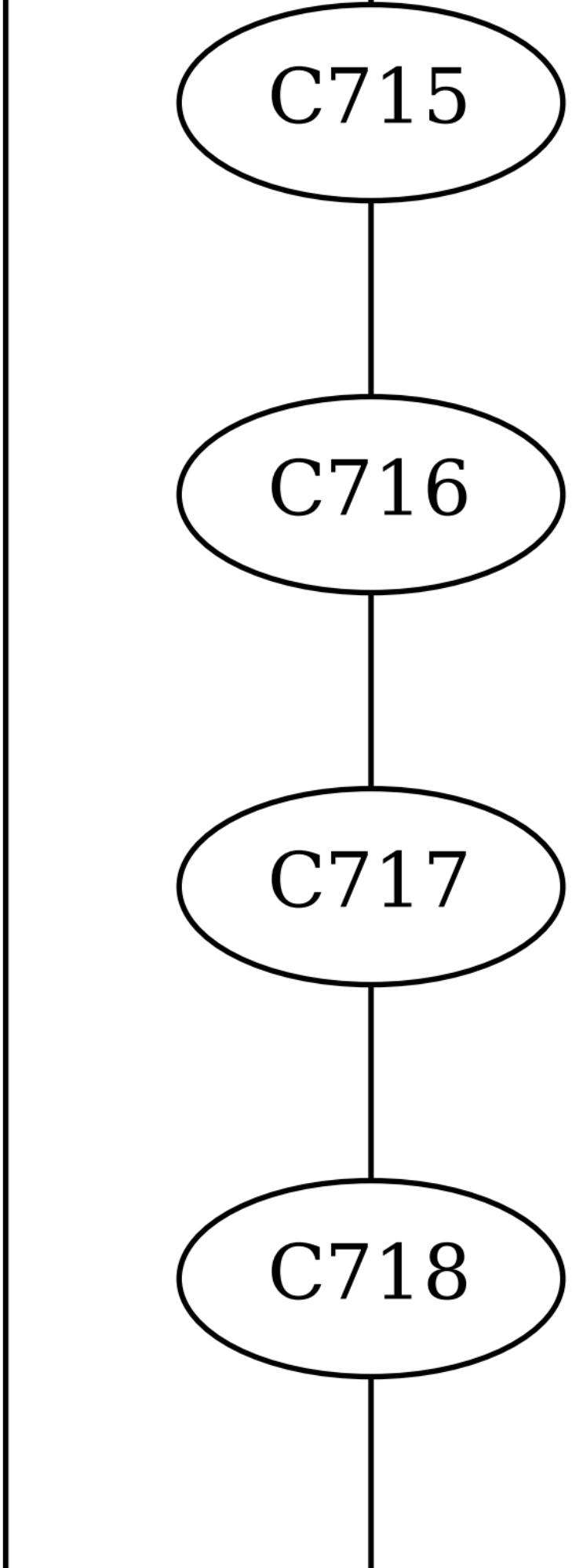
C715
C716
C717
C718

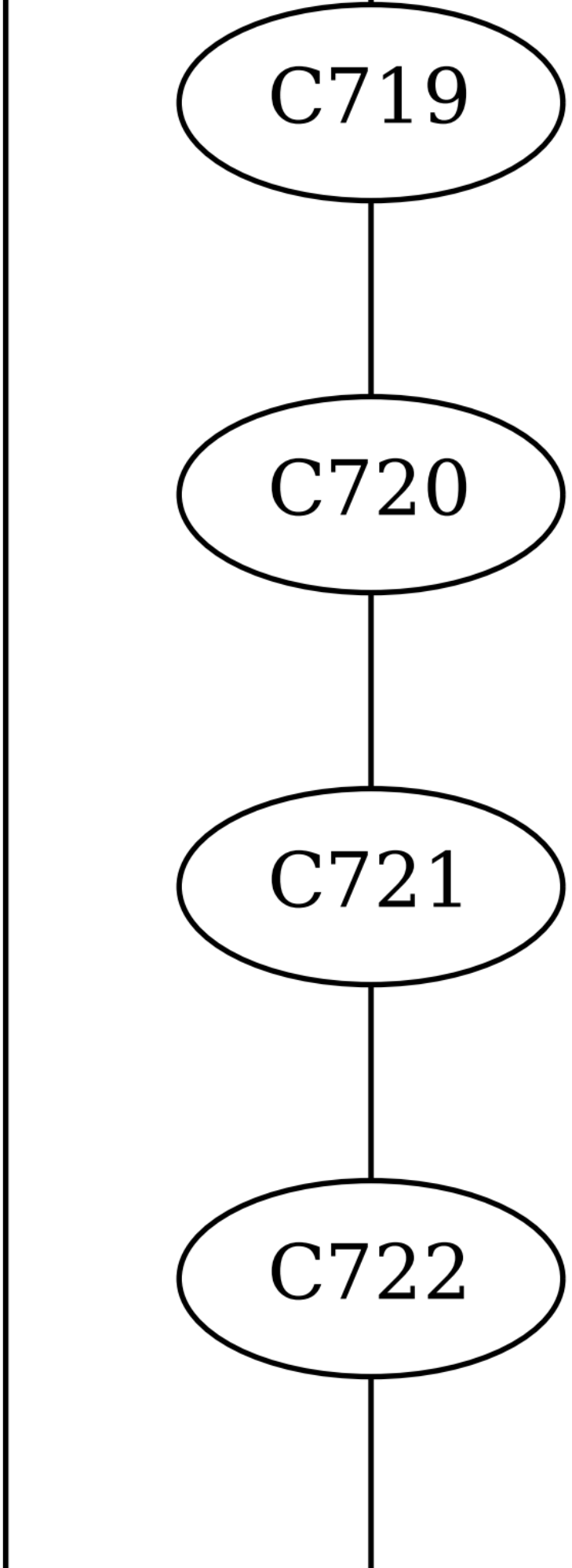
C719
C720
C721
C722

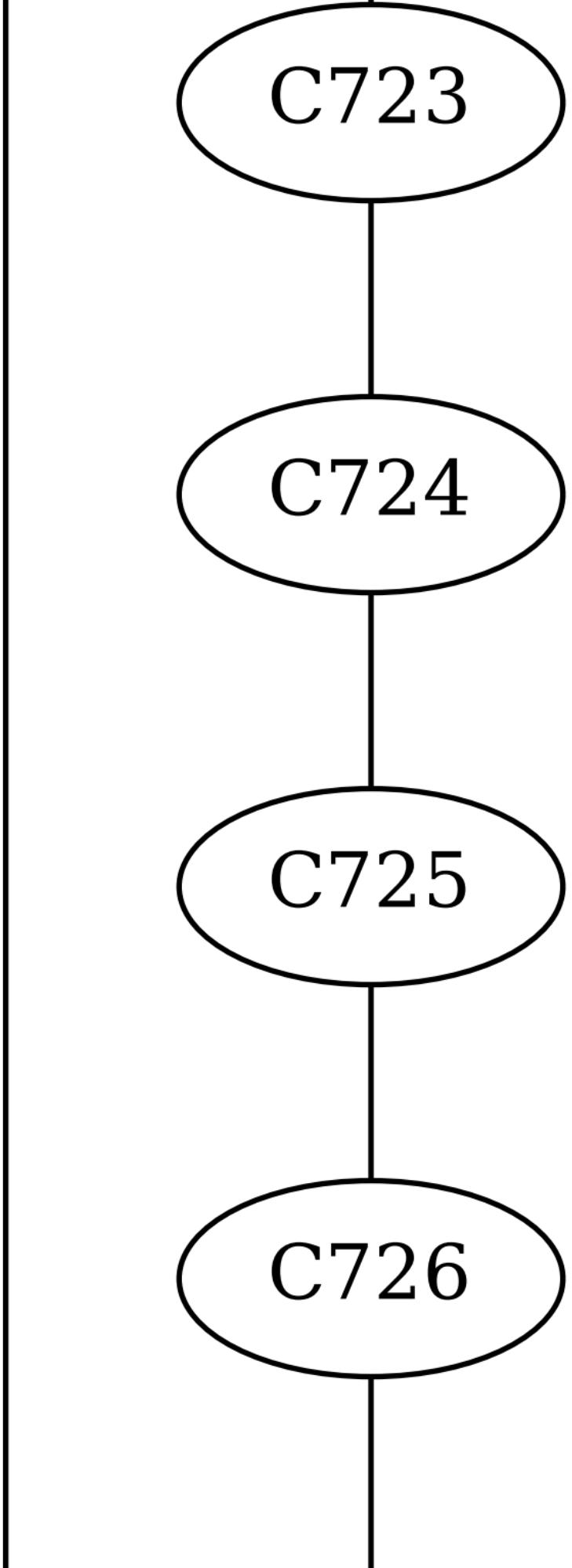
C723
C724
C725
C726

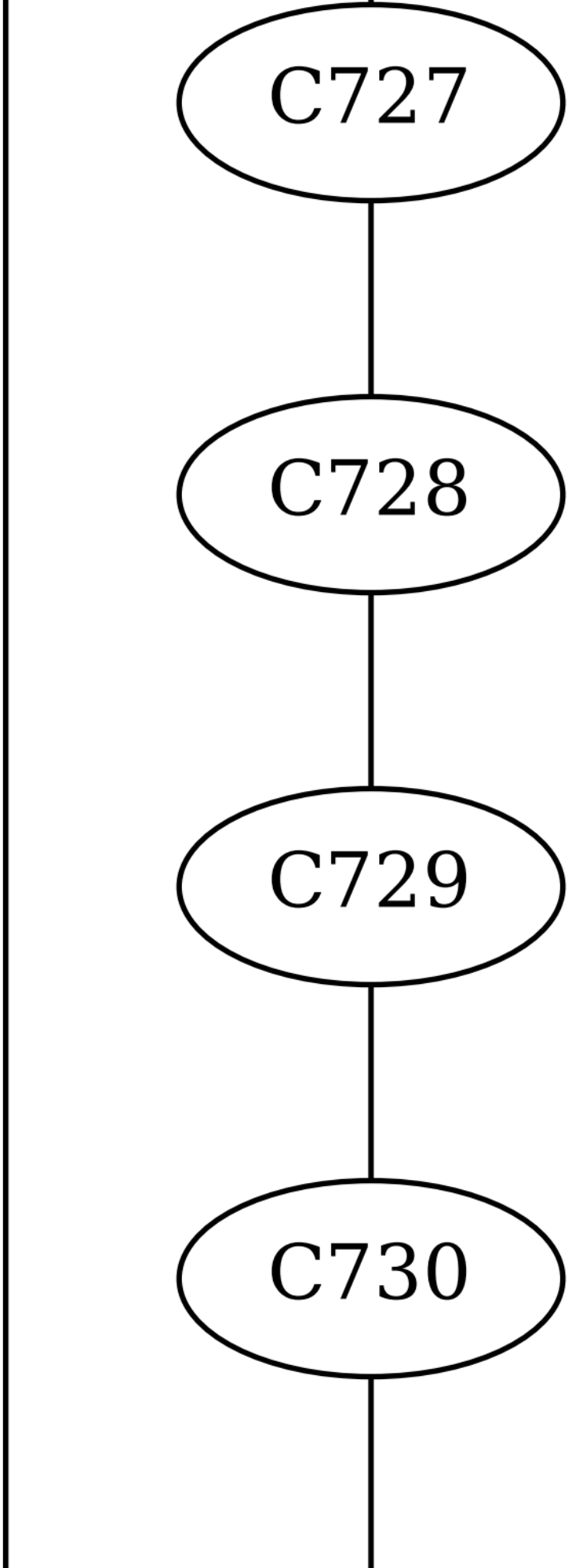
C727
C728
C729
C730

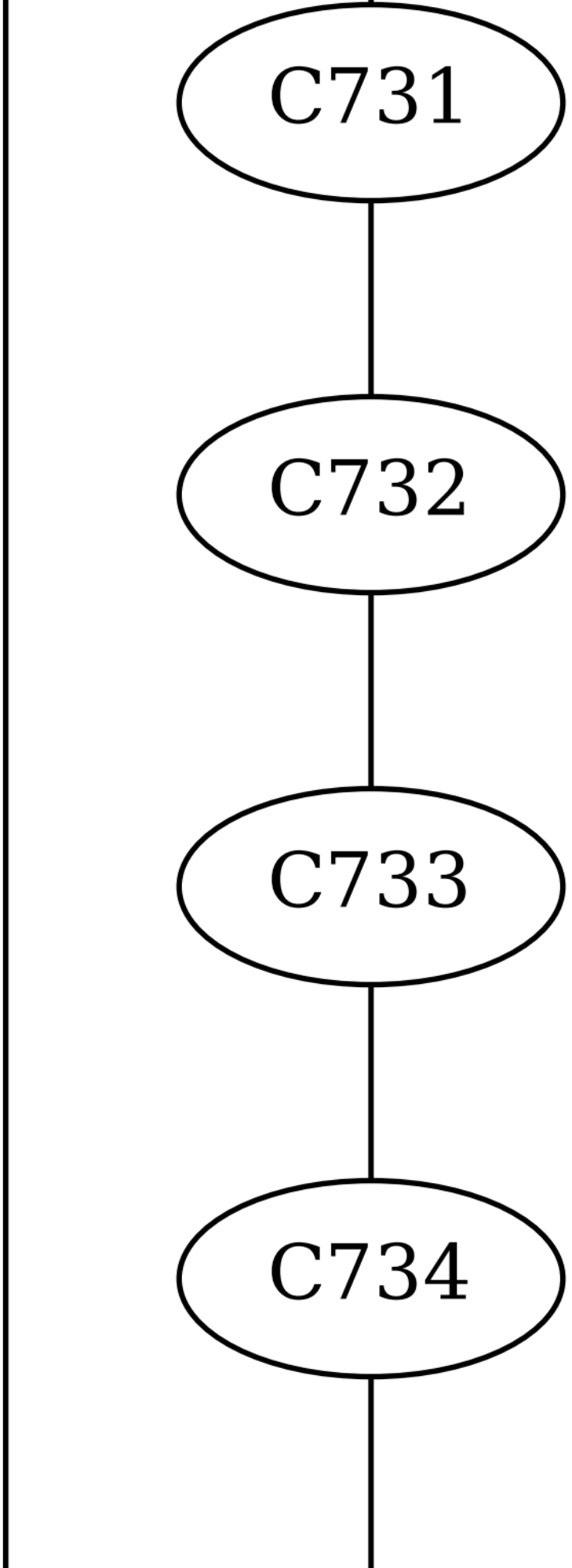
C731
C732
C733
C734

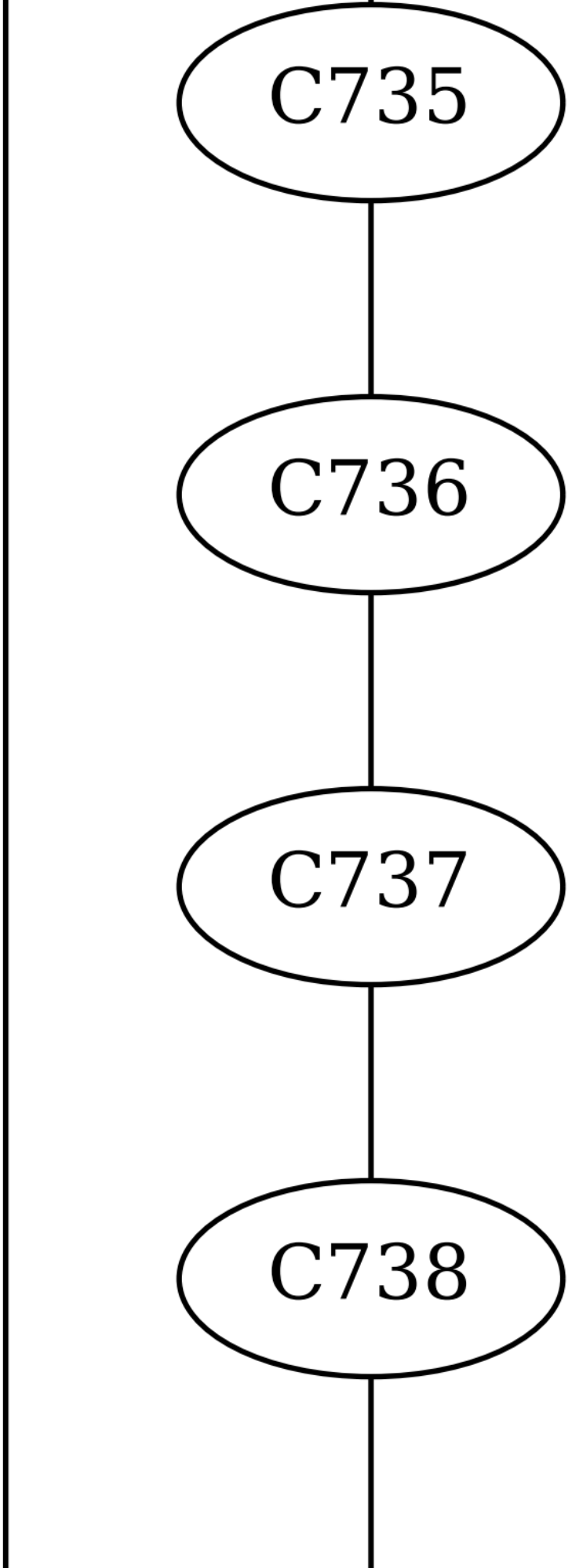
C735
C736
C737
C738

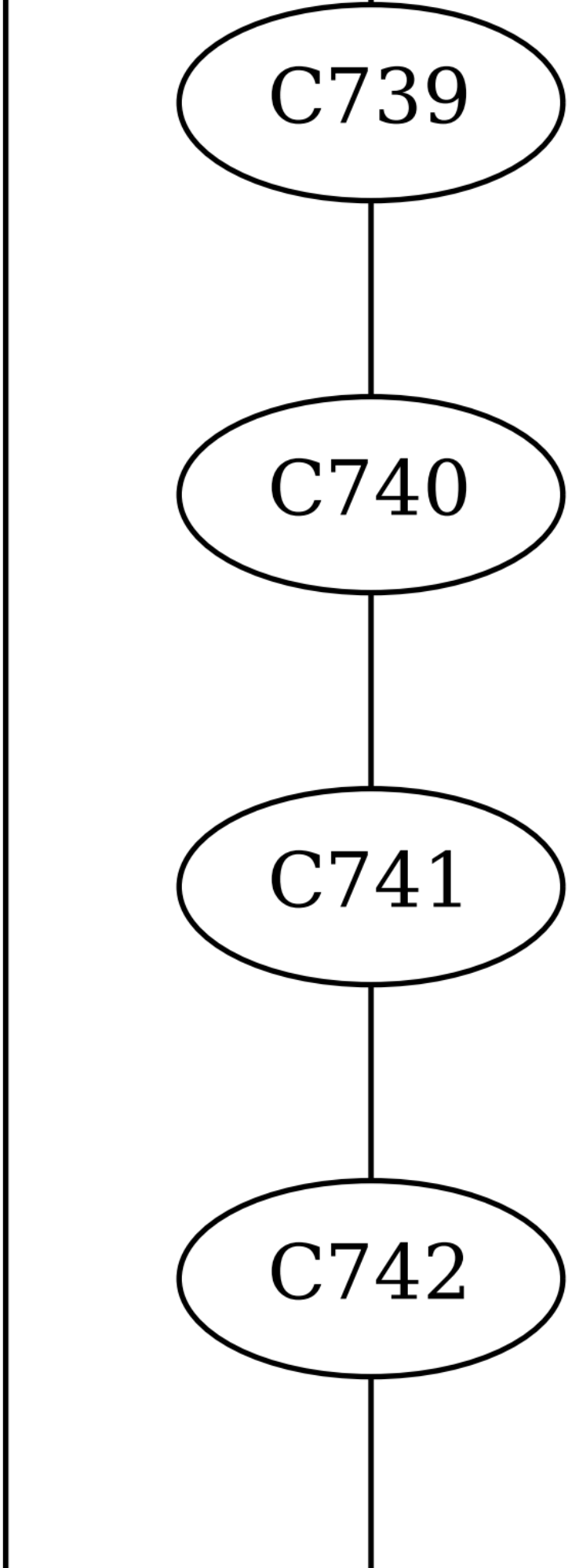
C739
C740
C741
C742

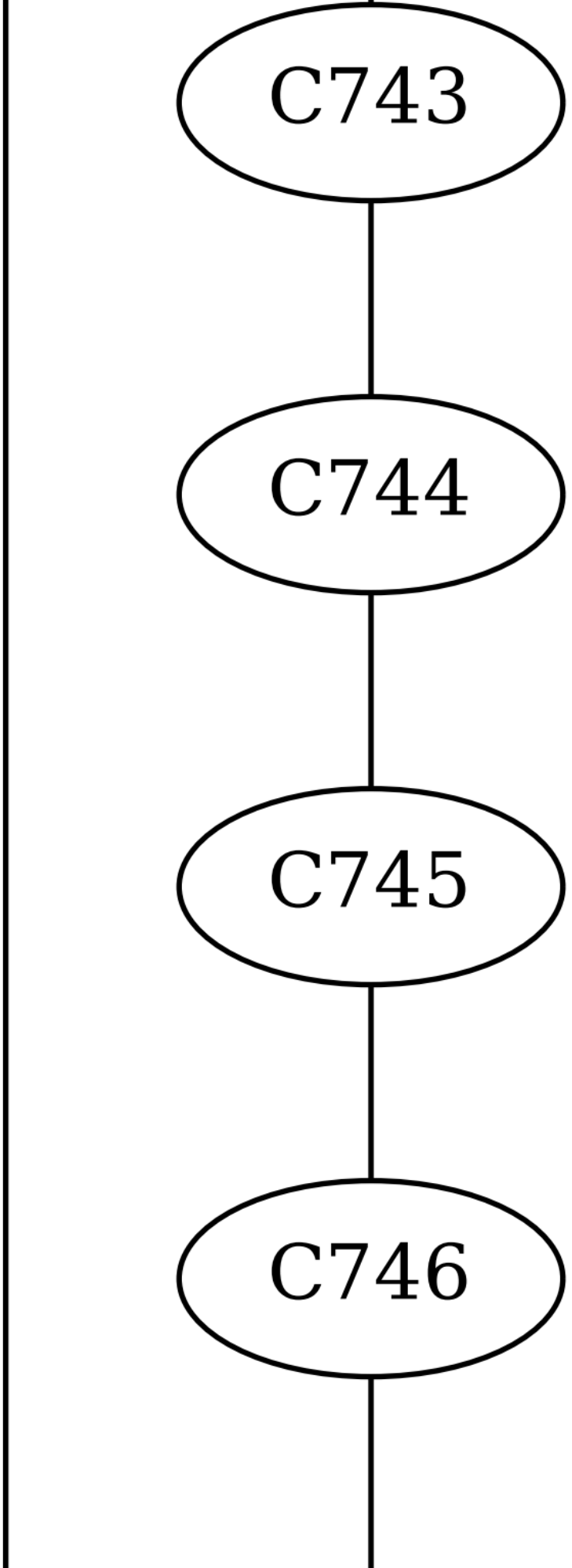
C743
C744
C745
C746

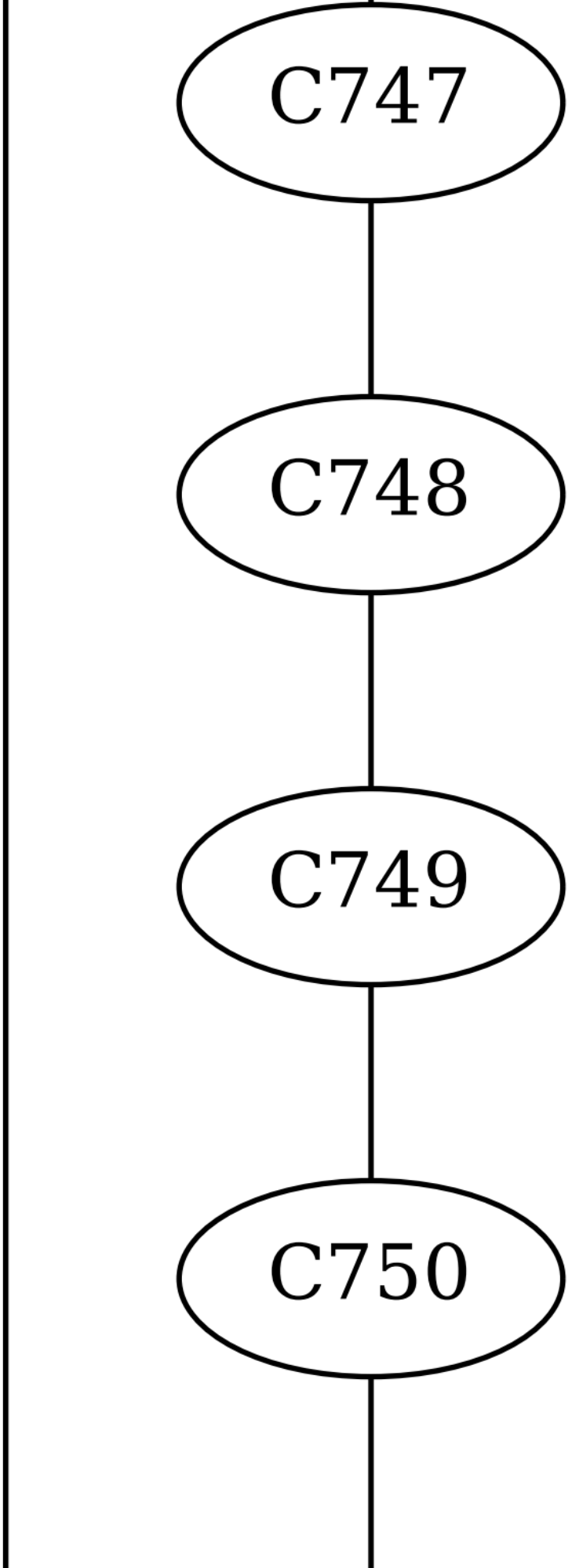
C747
C748
C749
C750

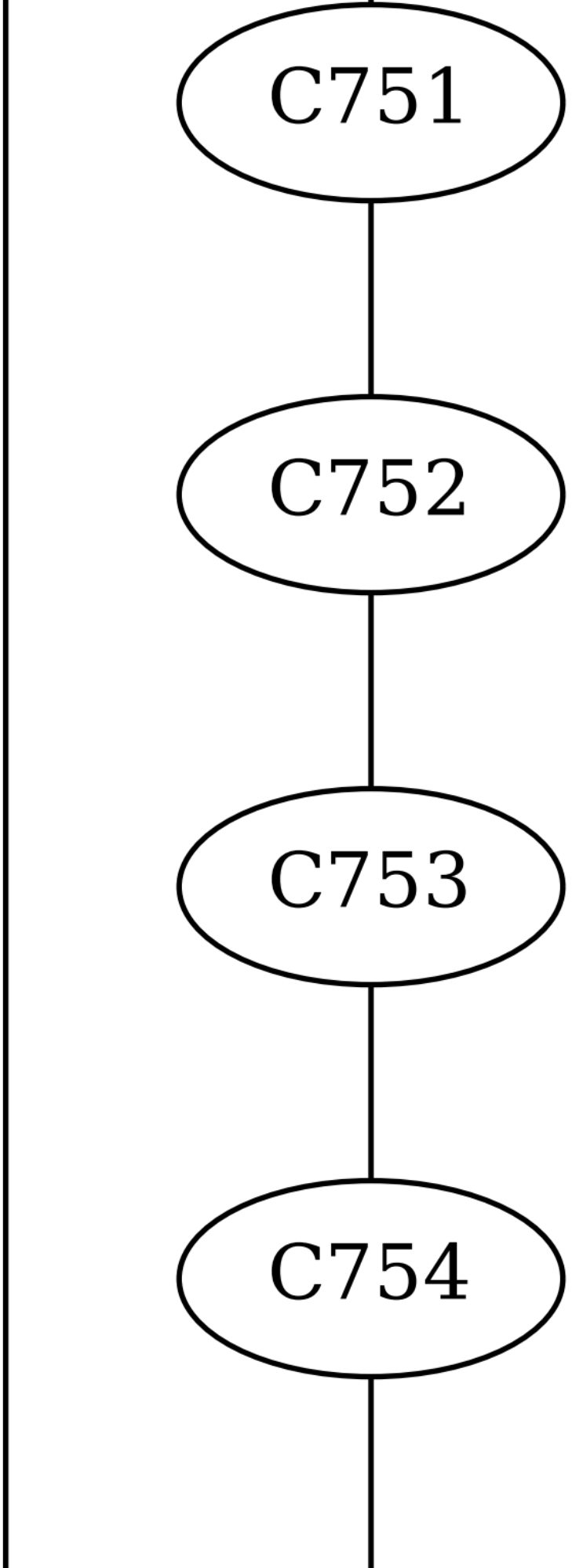
C751
C752
C753
C754

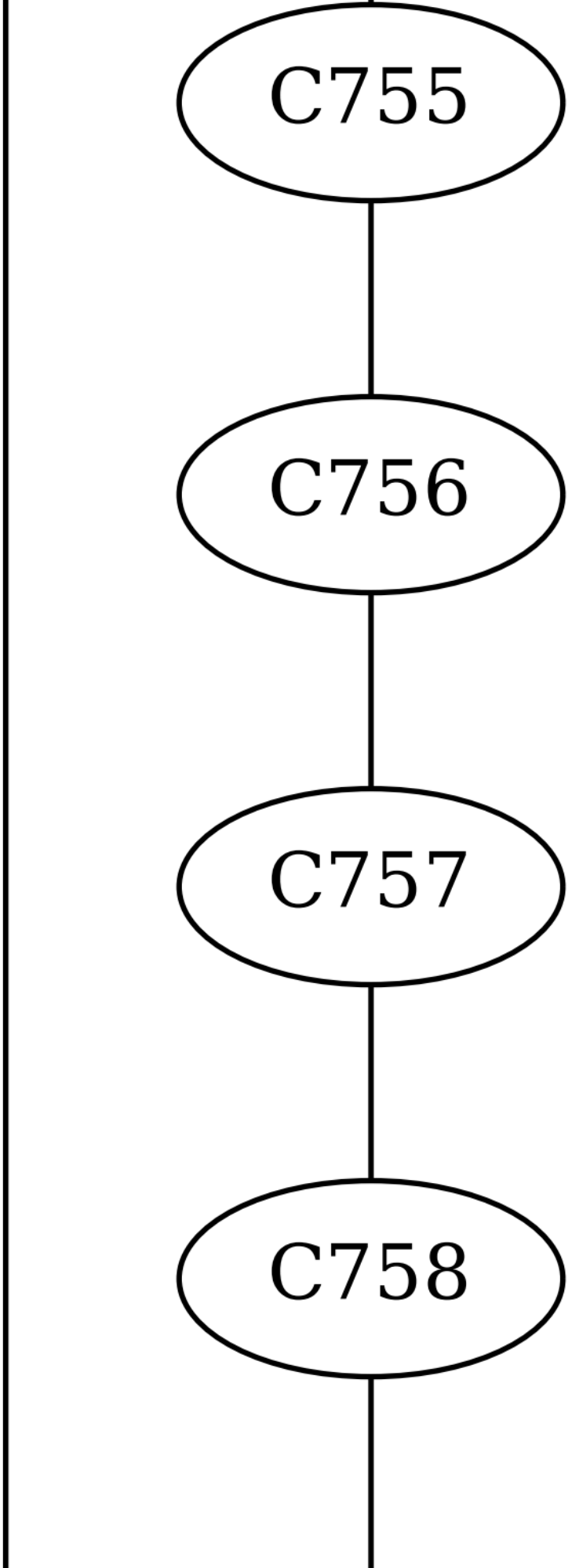
C755
C756
C757
C758

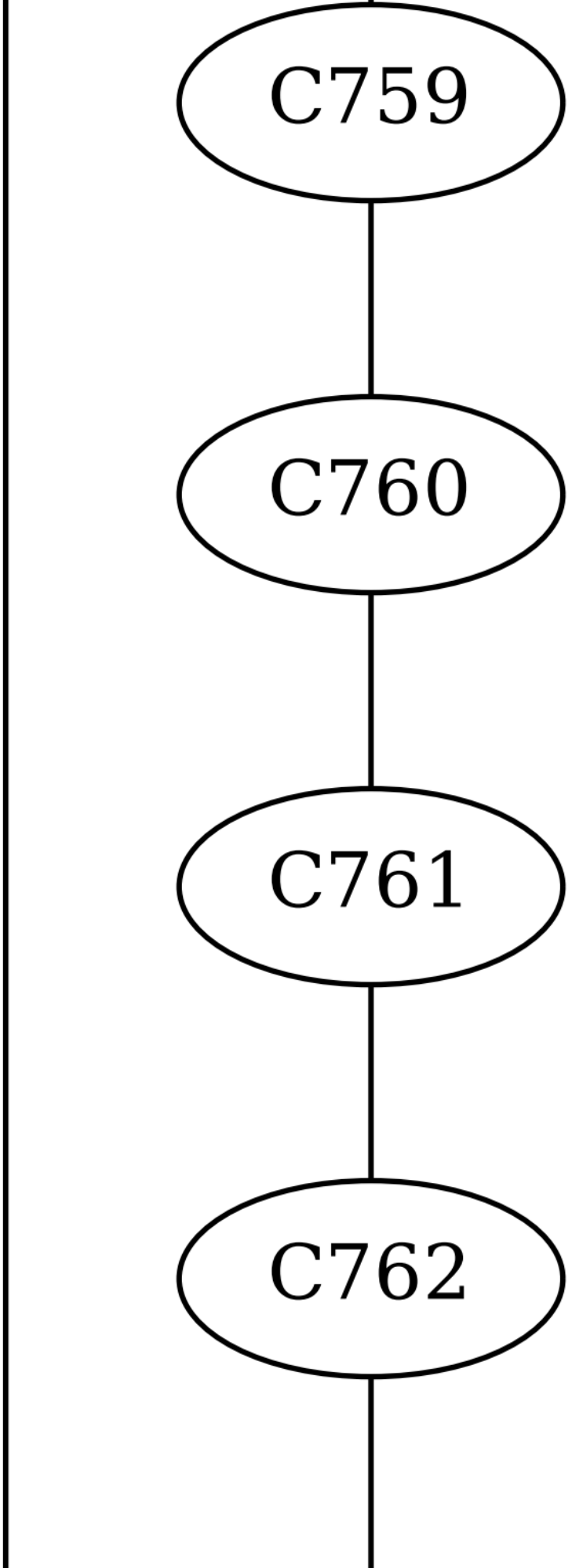
C759
C760
C761
C762

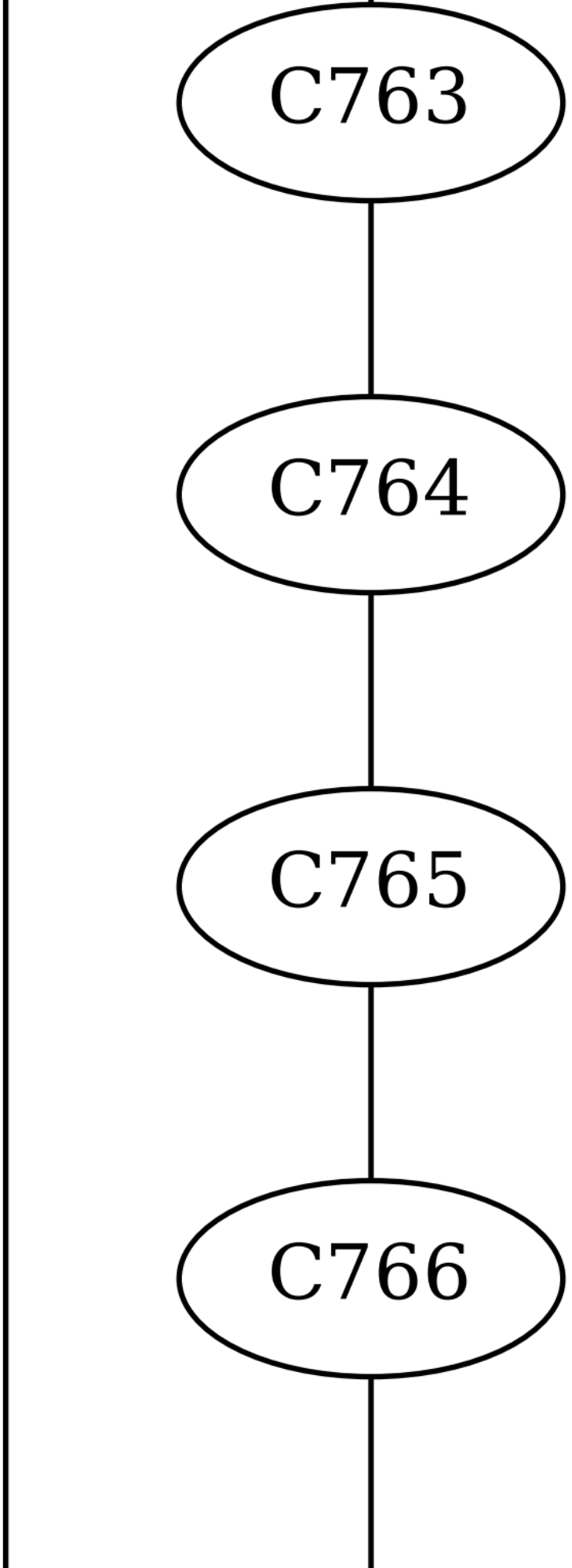
C763
C764
C765
C766

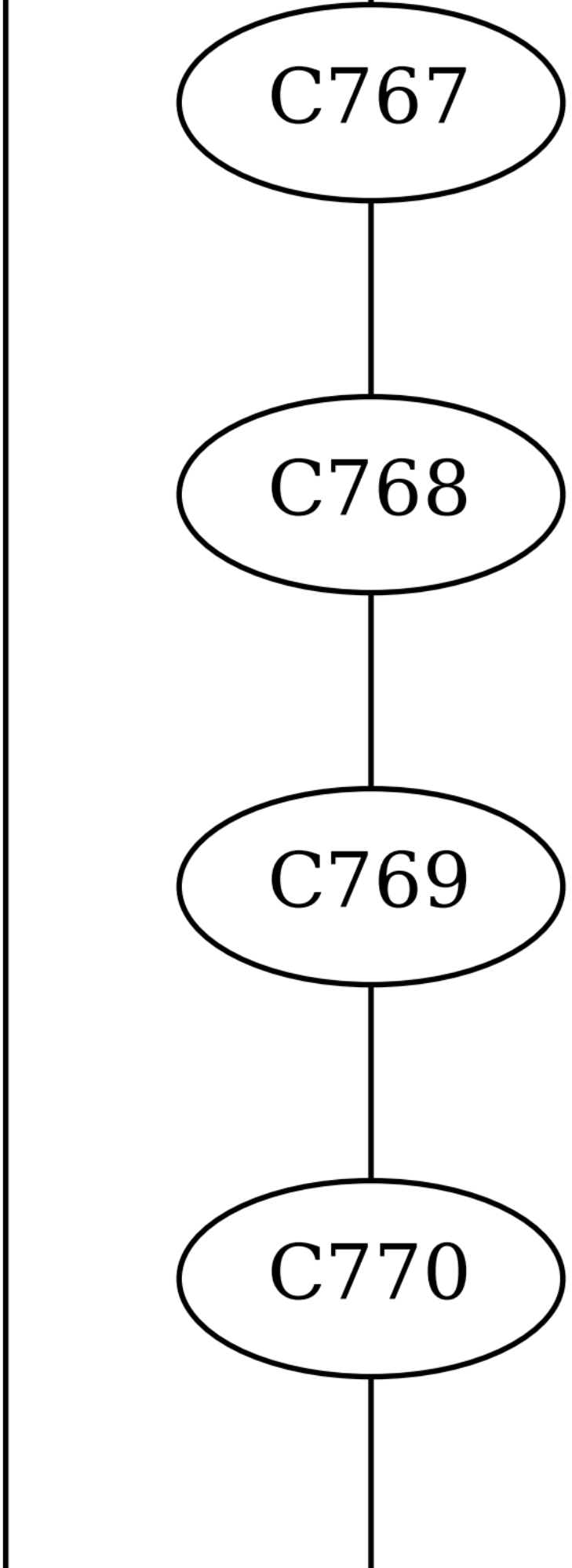
C767
C768
C769
C770

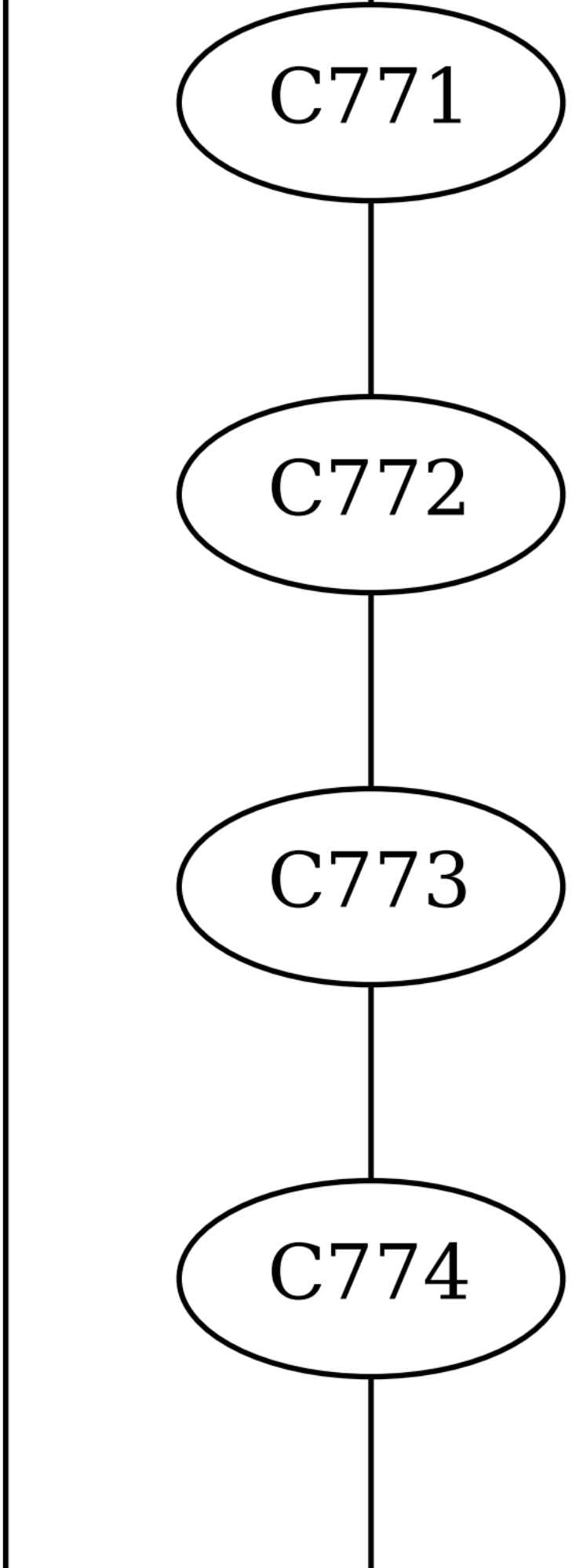
C771
C772
C773
C774

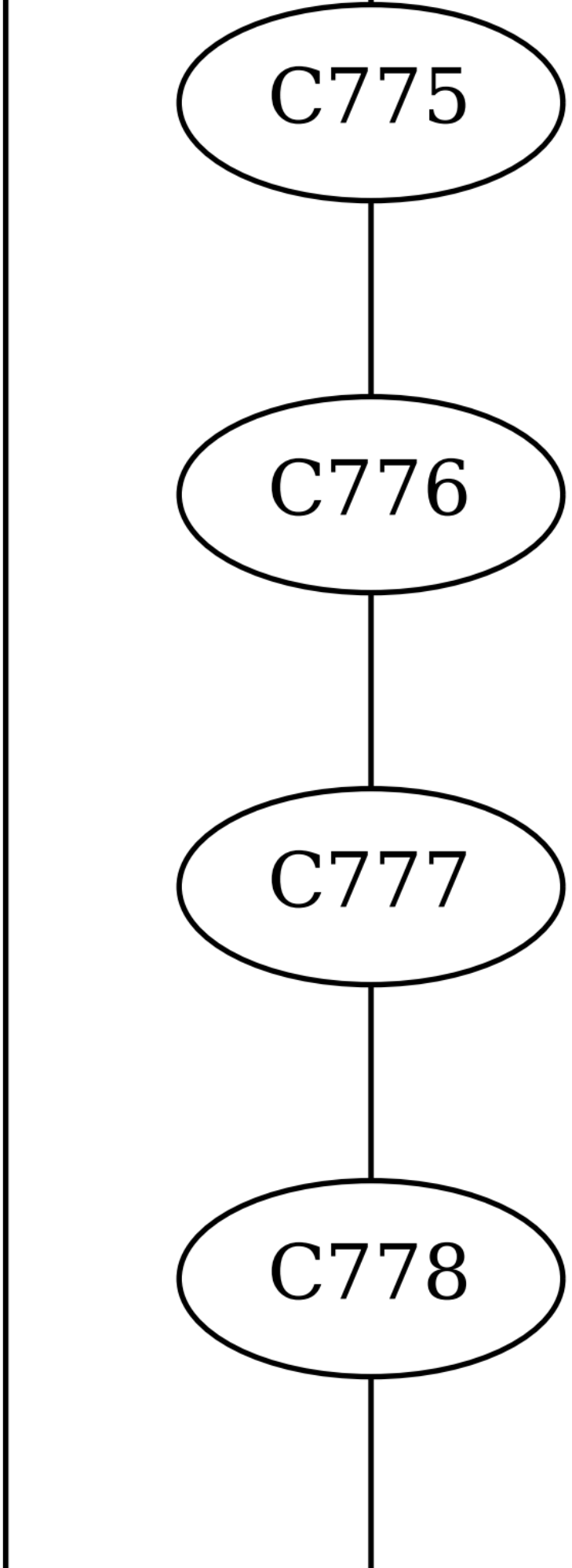
C775
C776
C777
C778

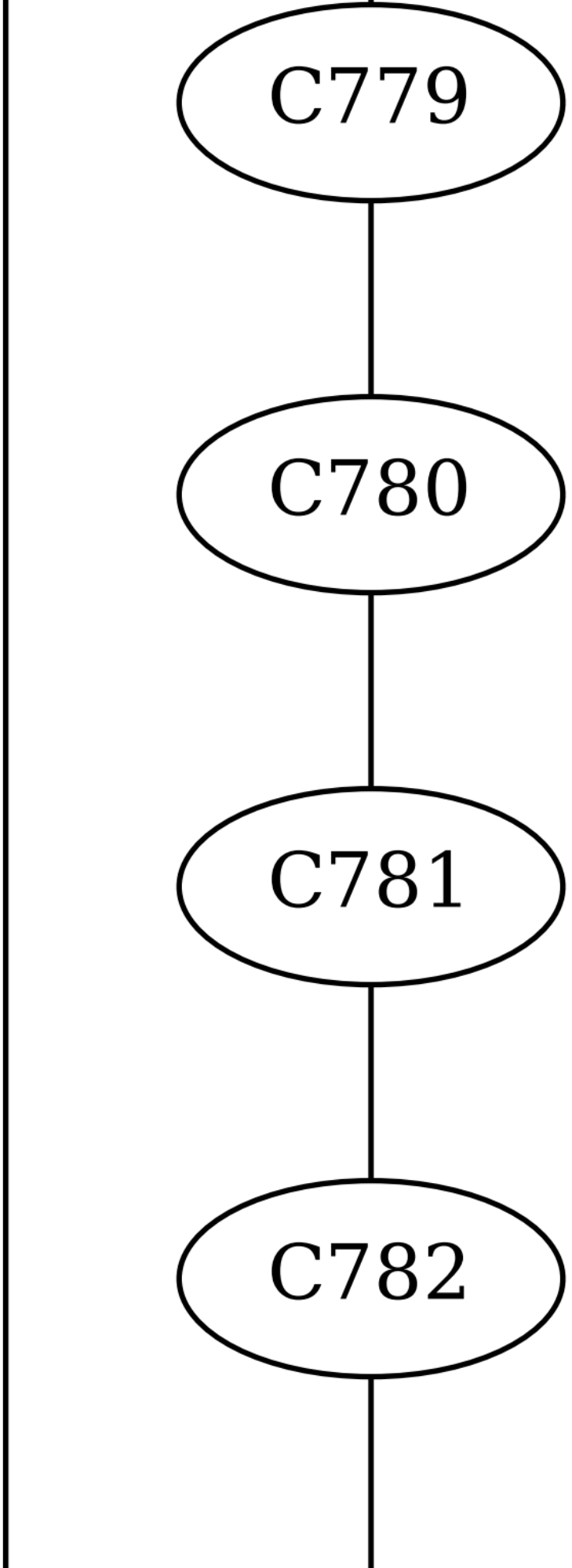
C779
C780
C781
C782

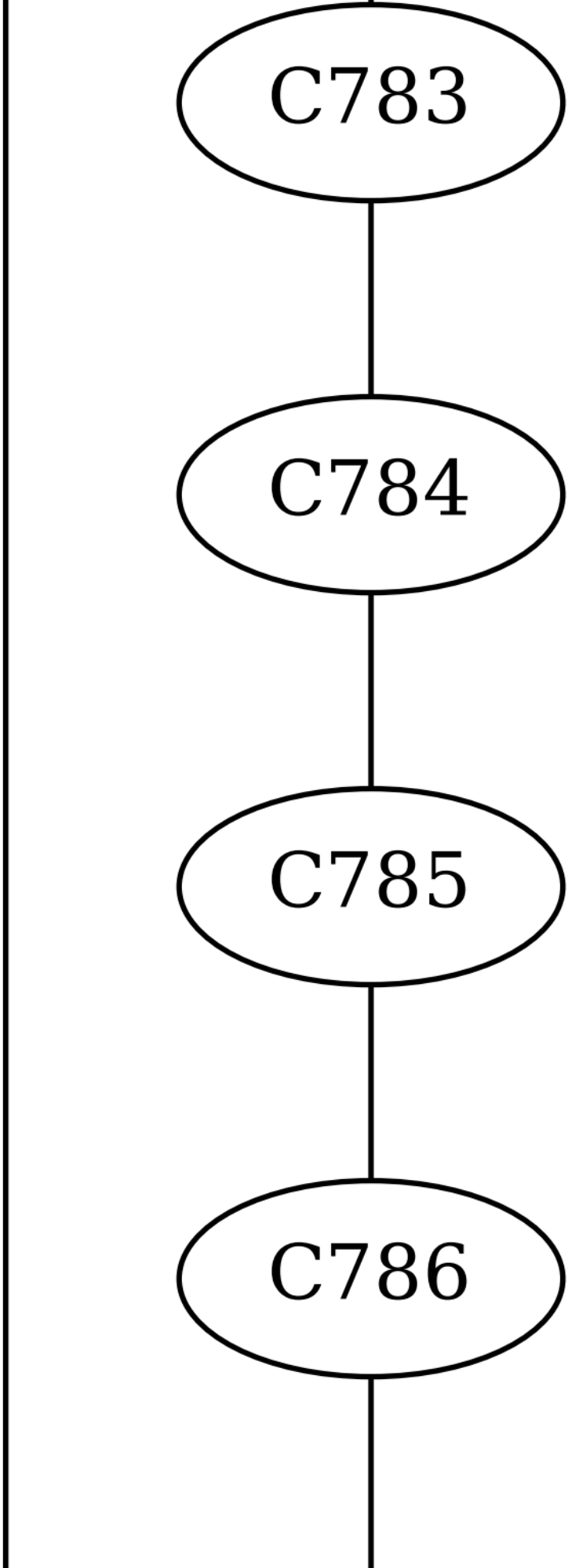
C783
C784
C785
C786

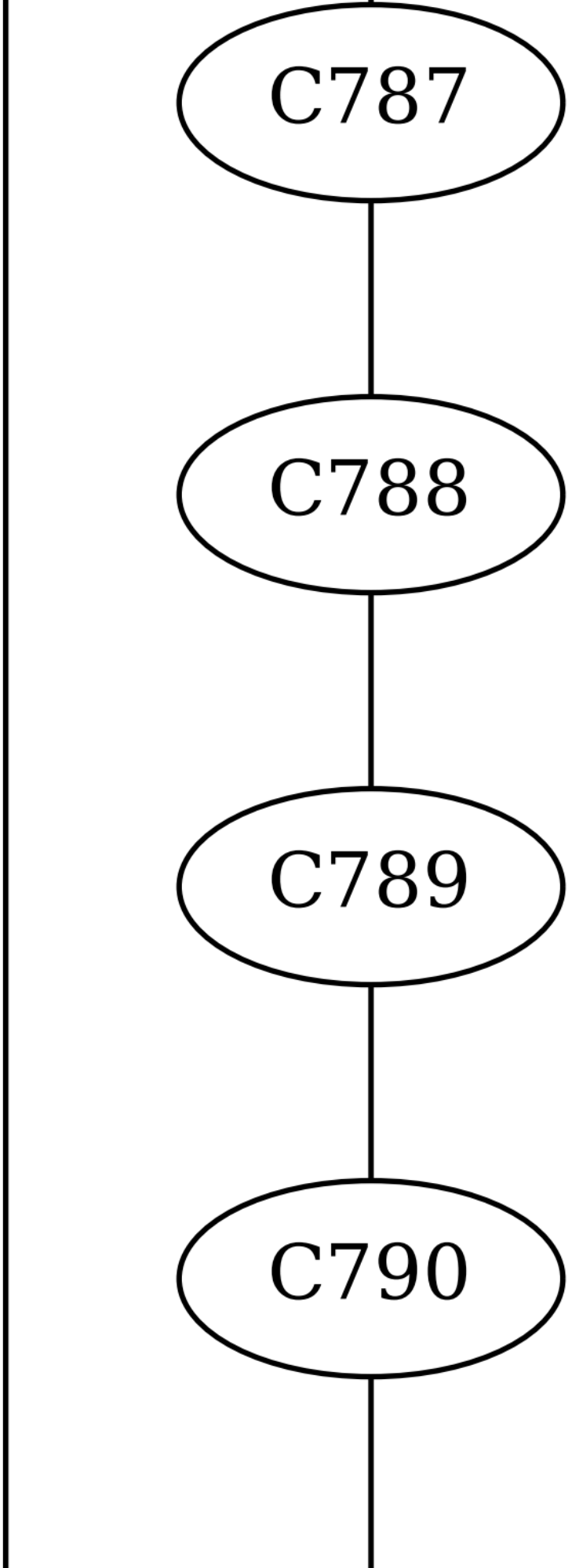
C787
C788
C789
C790

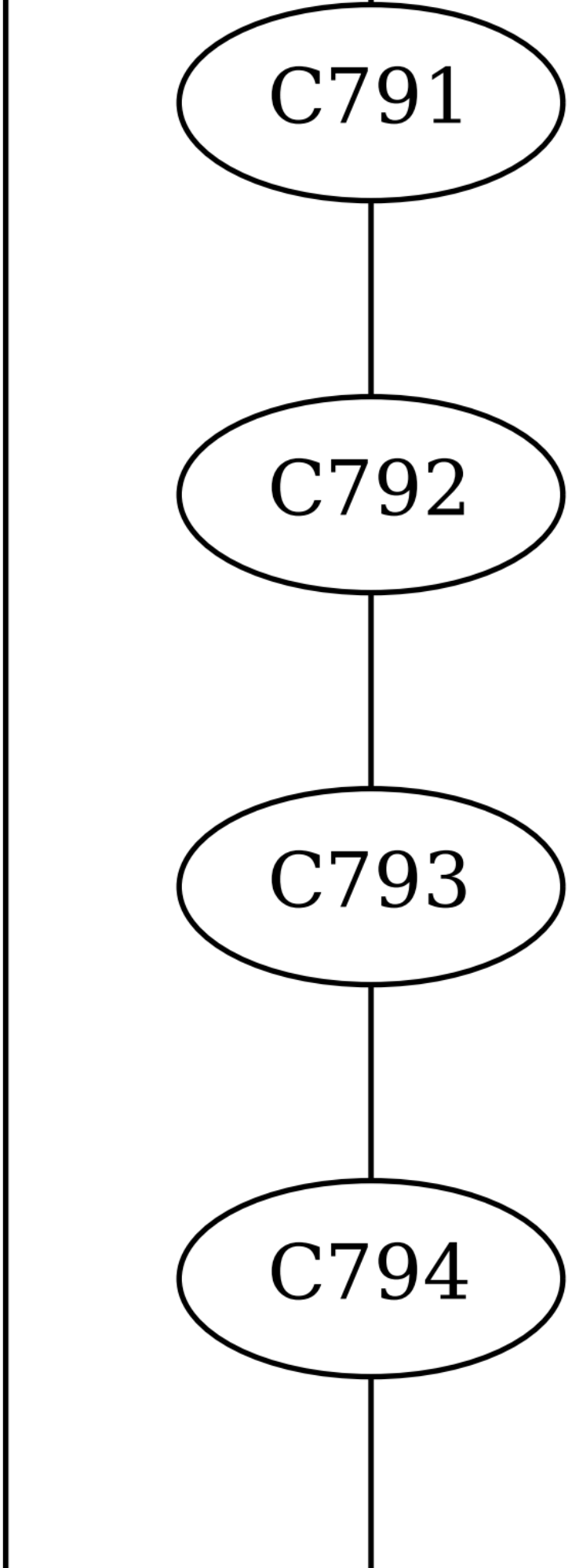
C791
C792
C793
C794

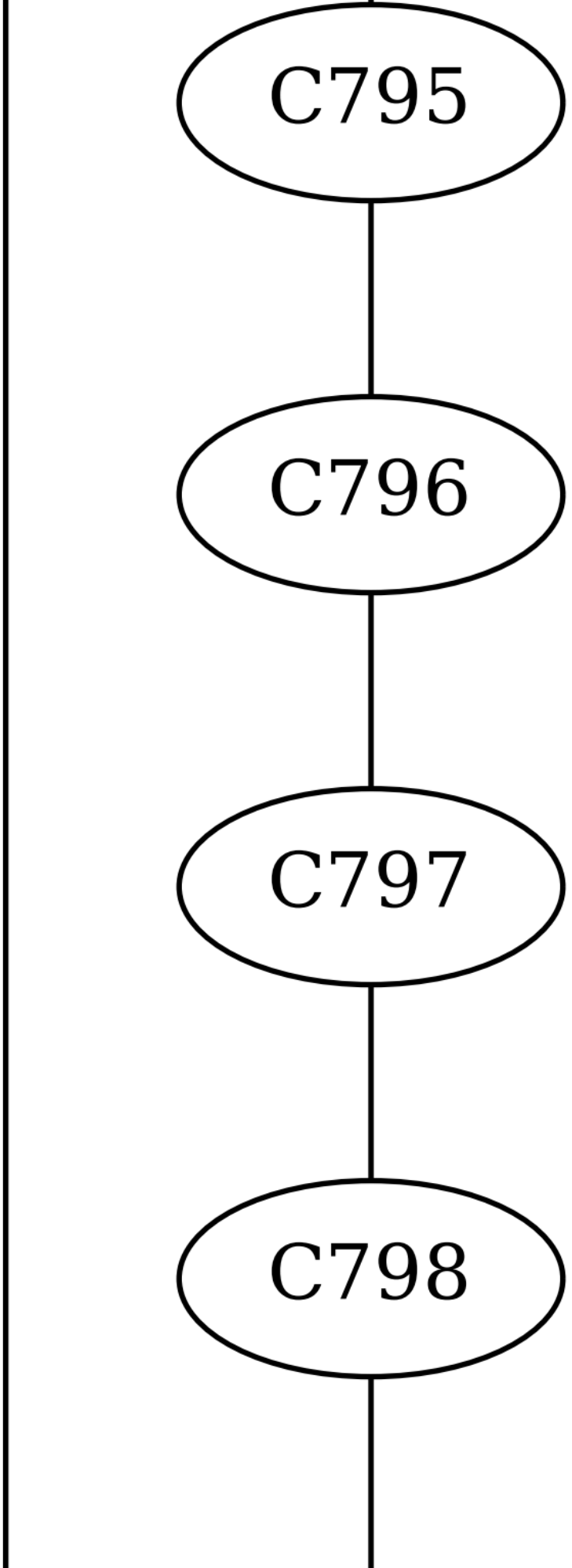
C795
C796
C797
C798

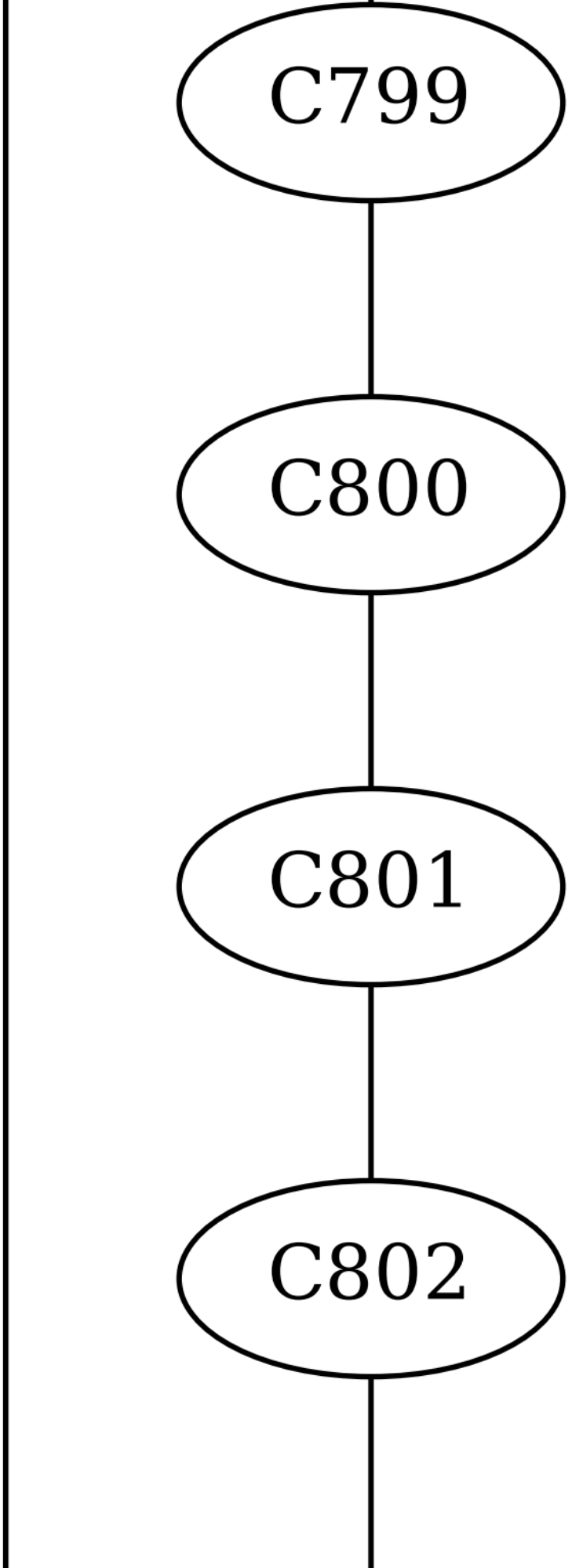
C799
C800
C801
C802

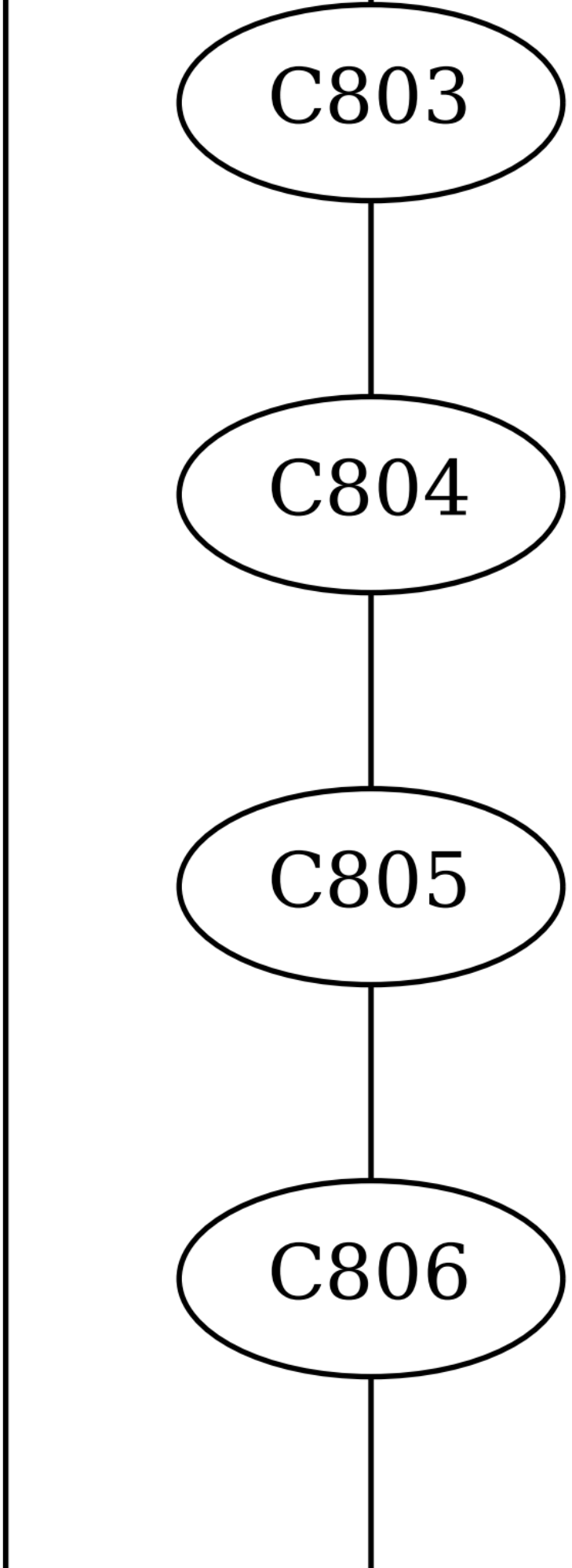
C803
C804
C805
C806

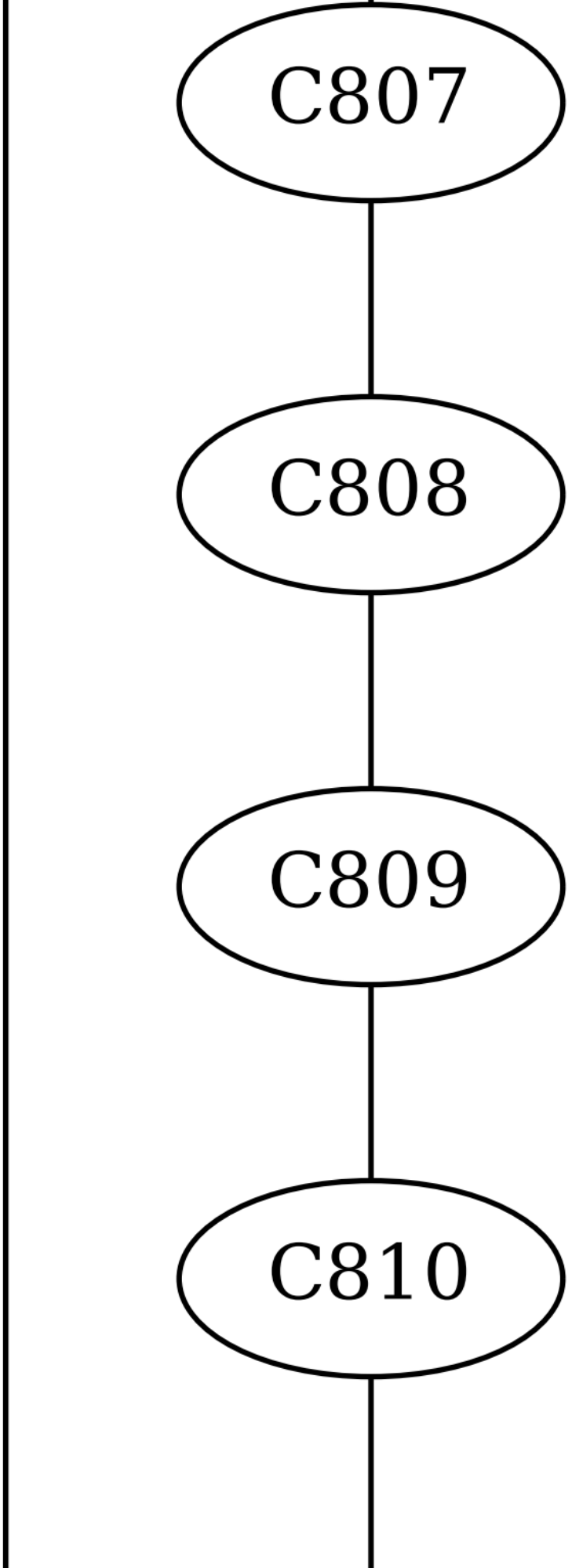
C807
C808
C809
C810

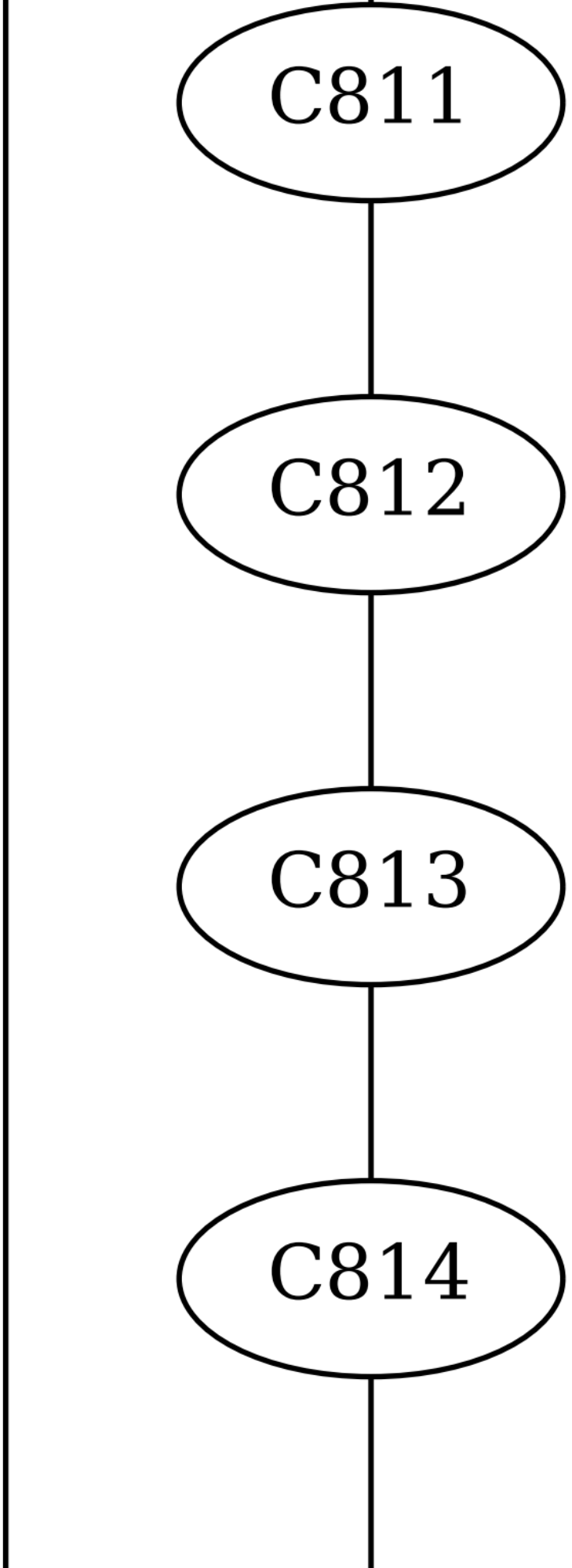
C811
C812
C813
C814

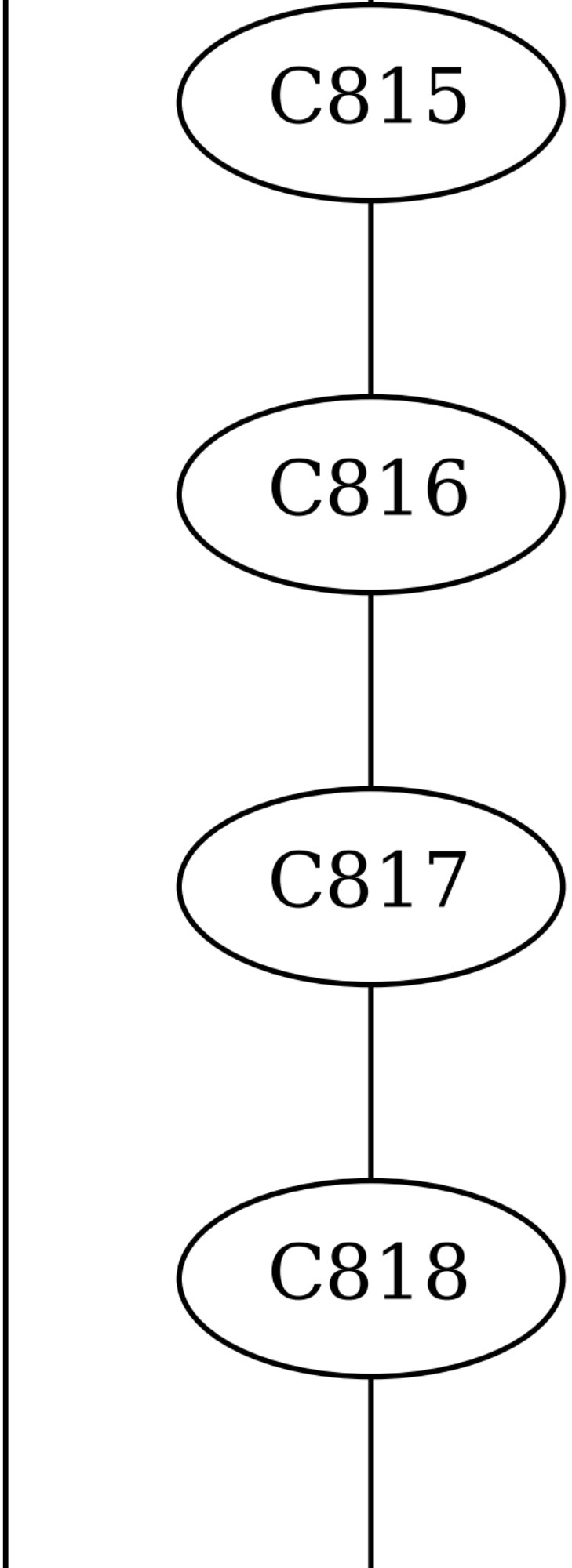
C815
C816
C817
C818

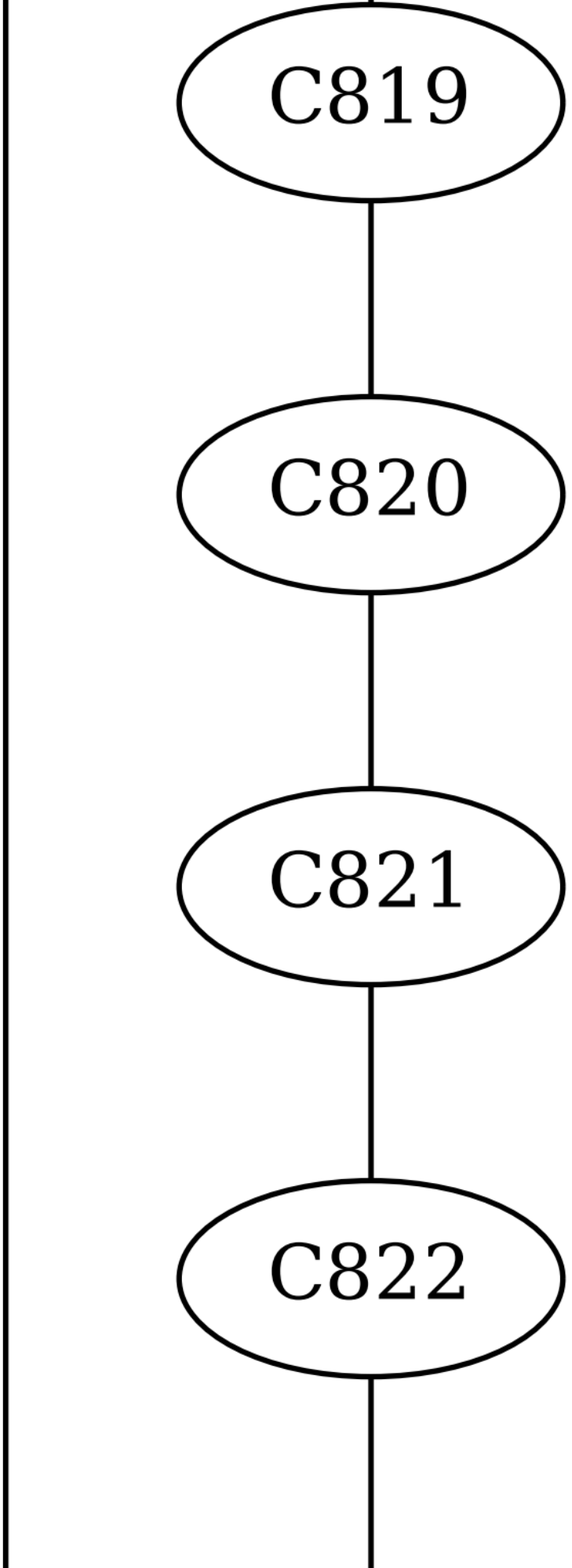
C819
C820
C821
C822

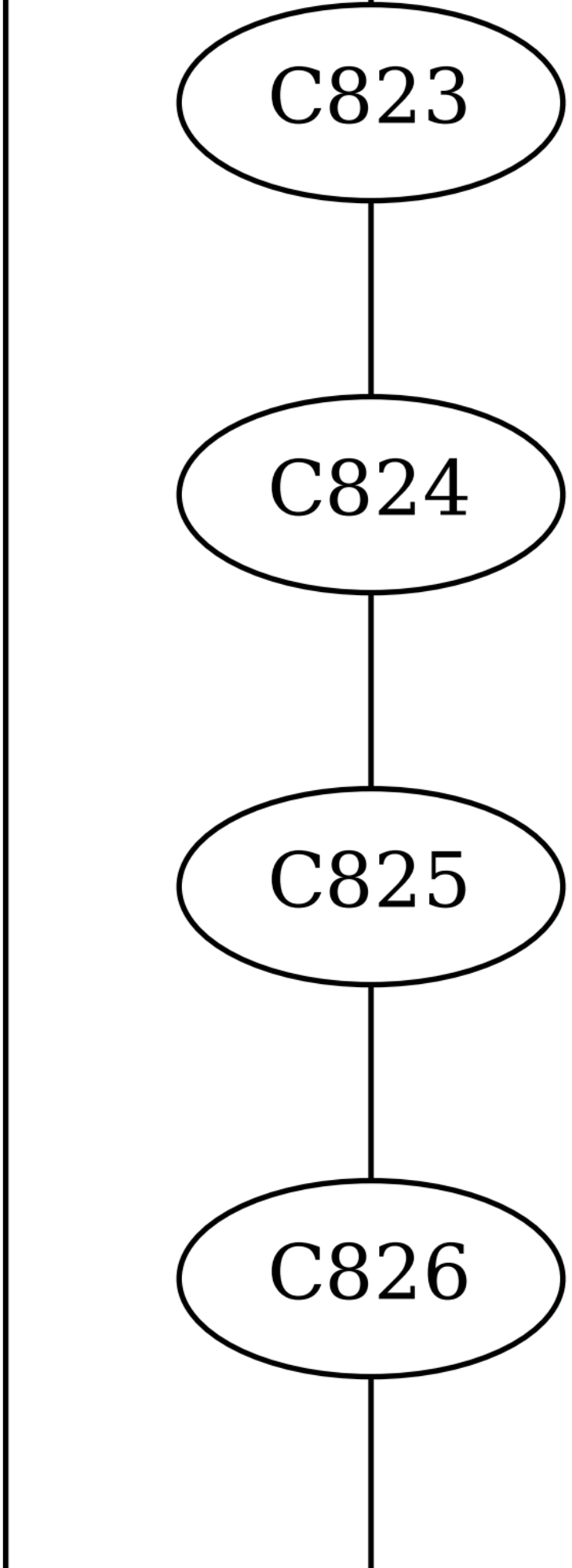
C823
C824
C825
C826

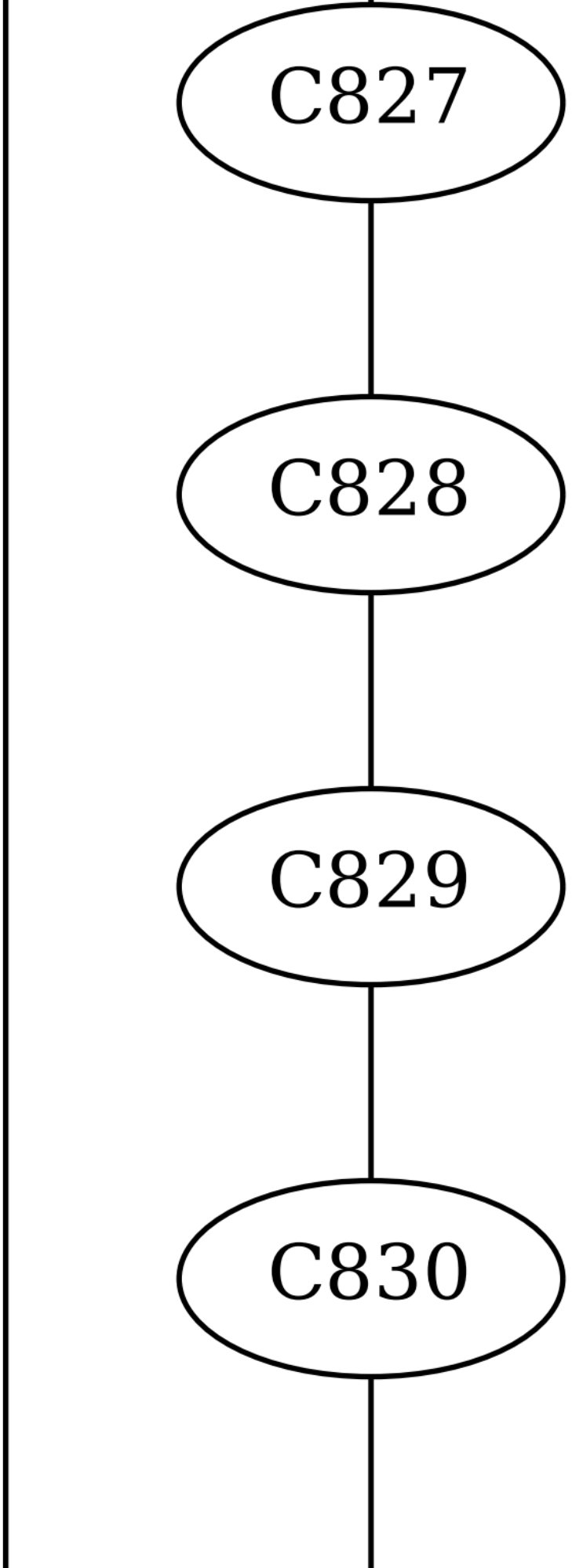
C827
C828
C829
C830

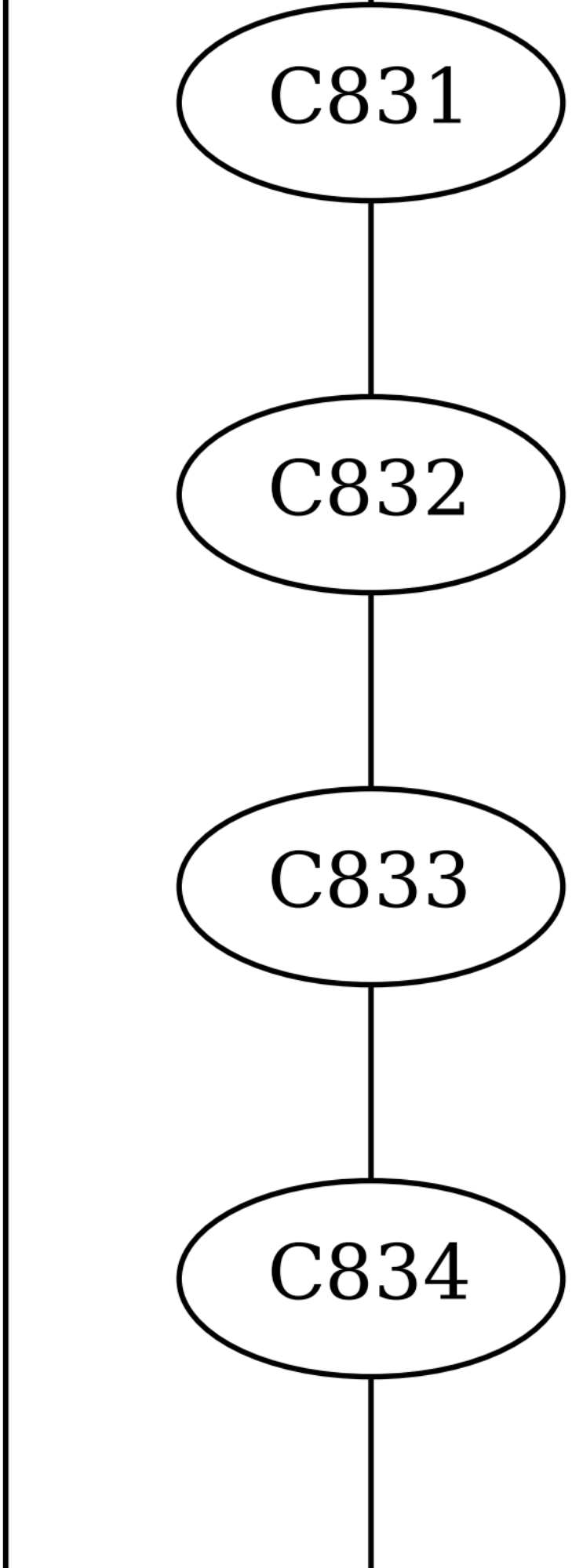
C831
C832
C833
C834

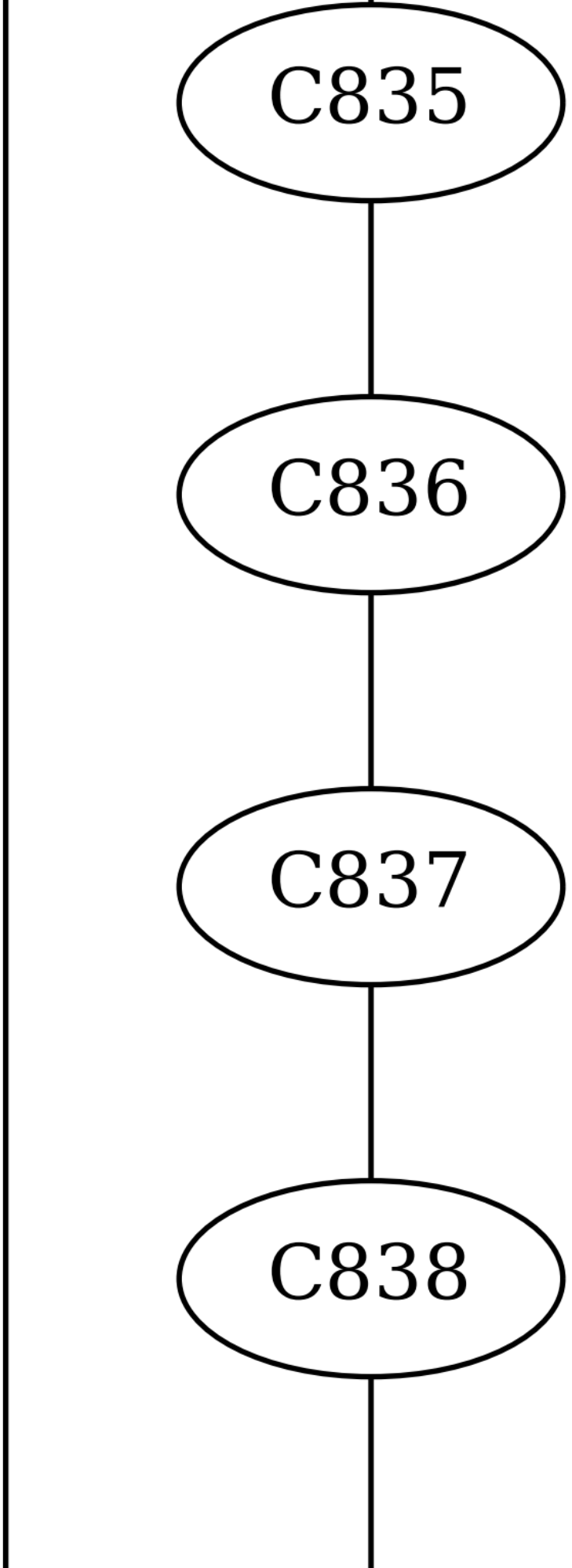
C835
C836
C837
C838

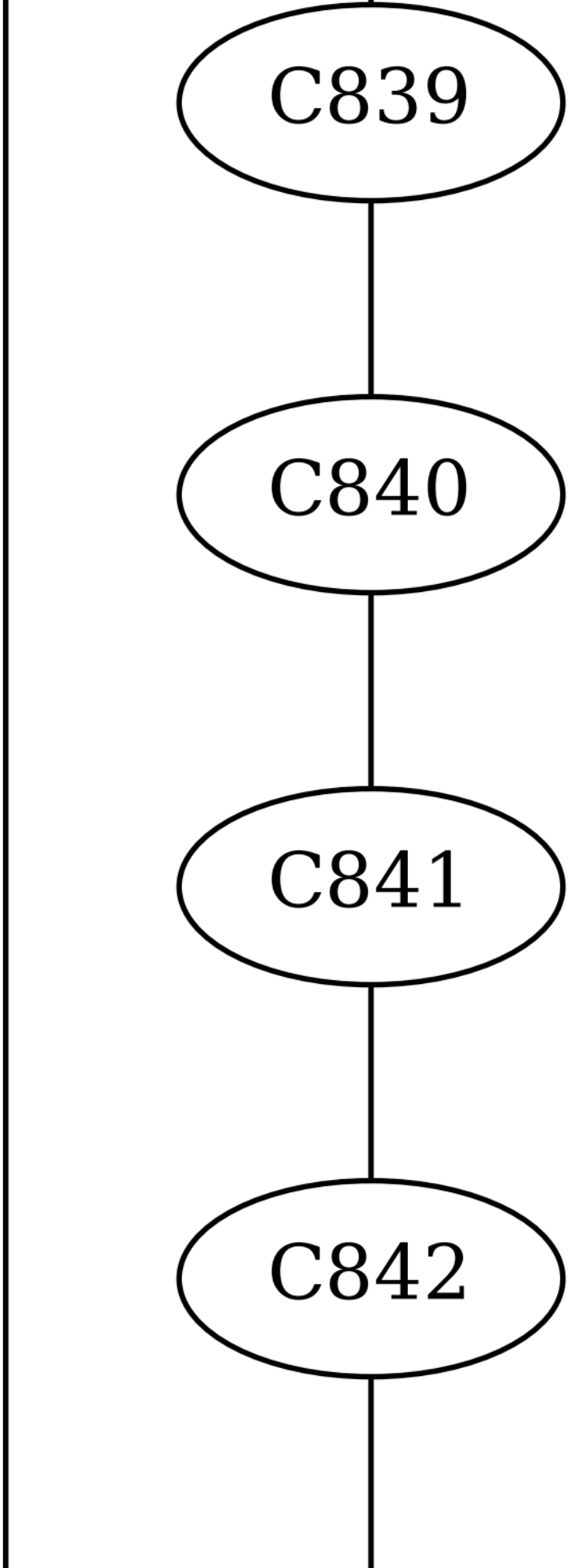
C839
C840
C841
C842

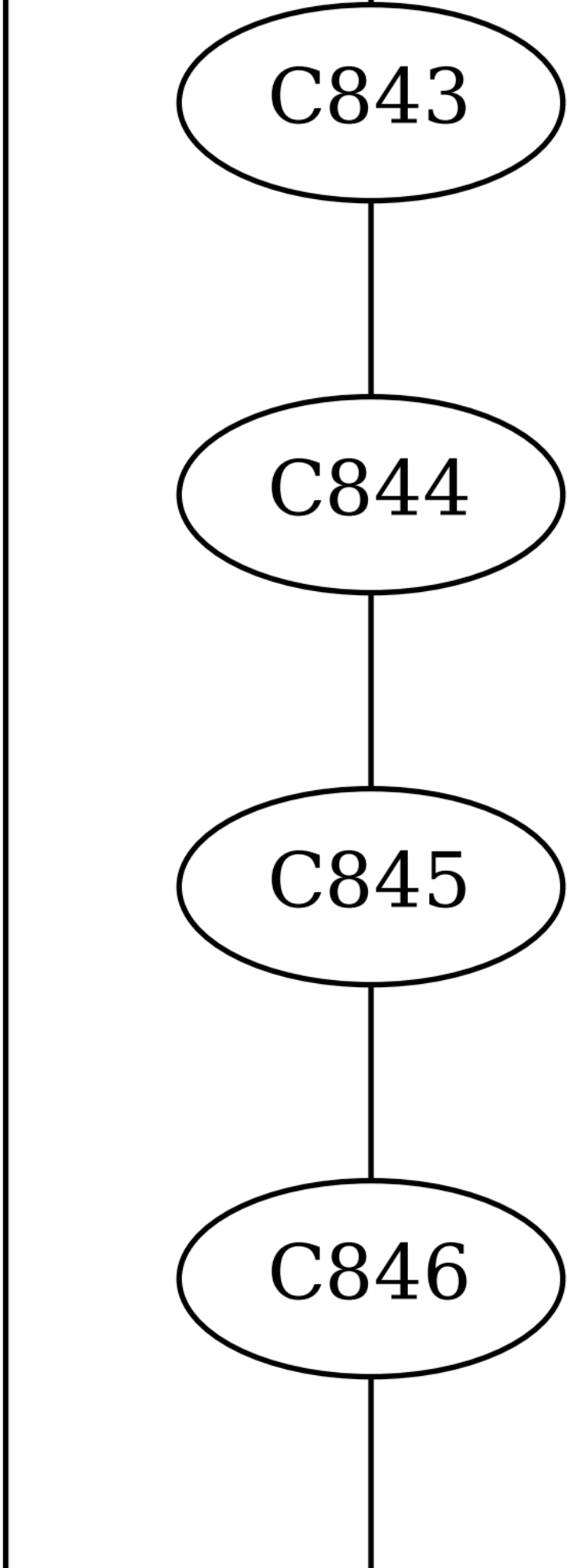
C843
C844
C845
C846

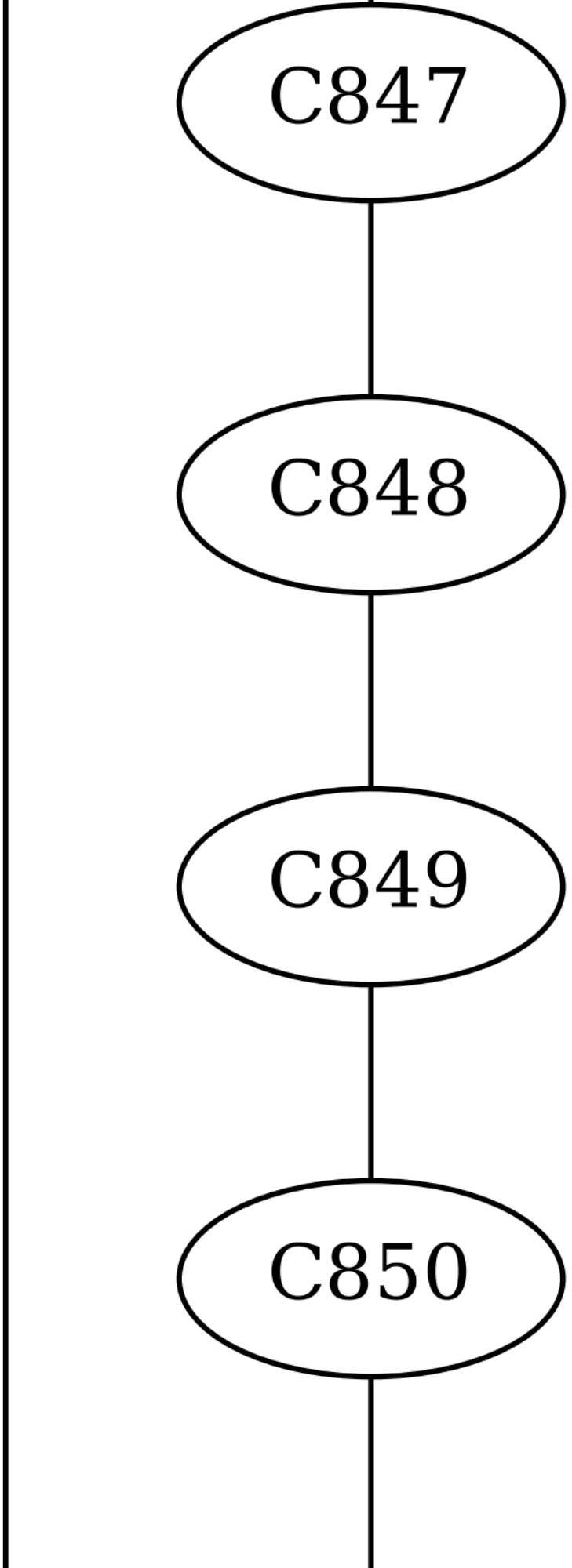
C847
C848
C849
C850

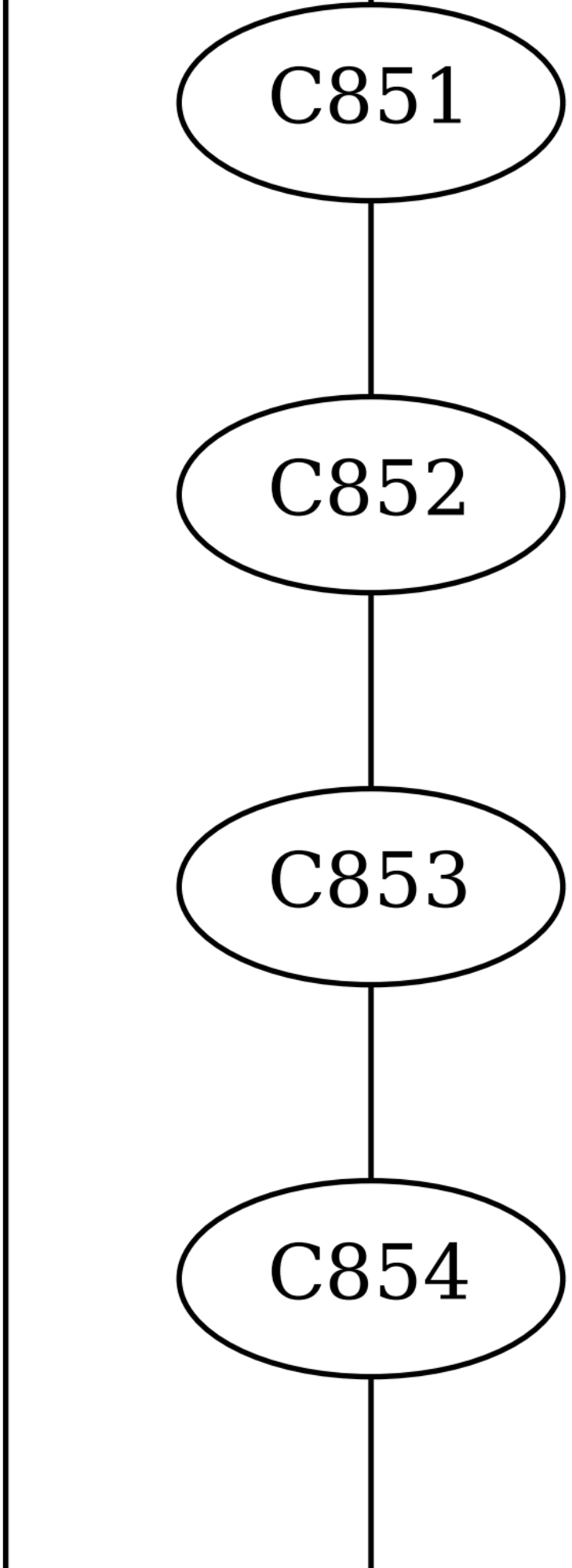
C851
C852
C853
C854

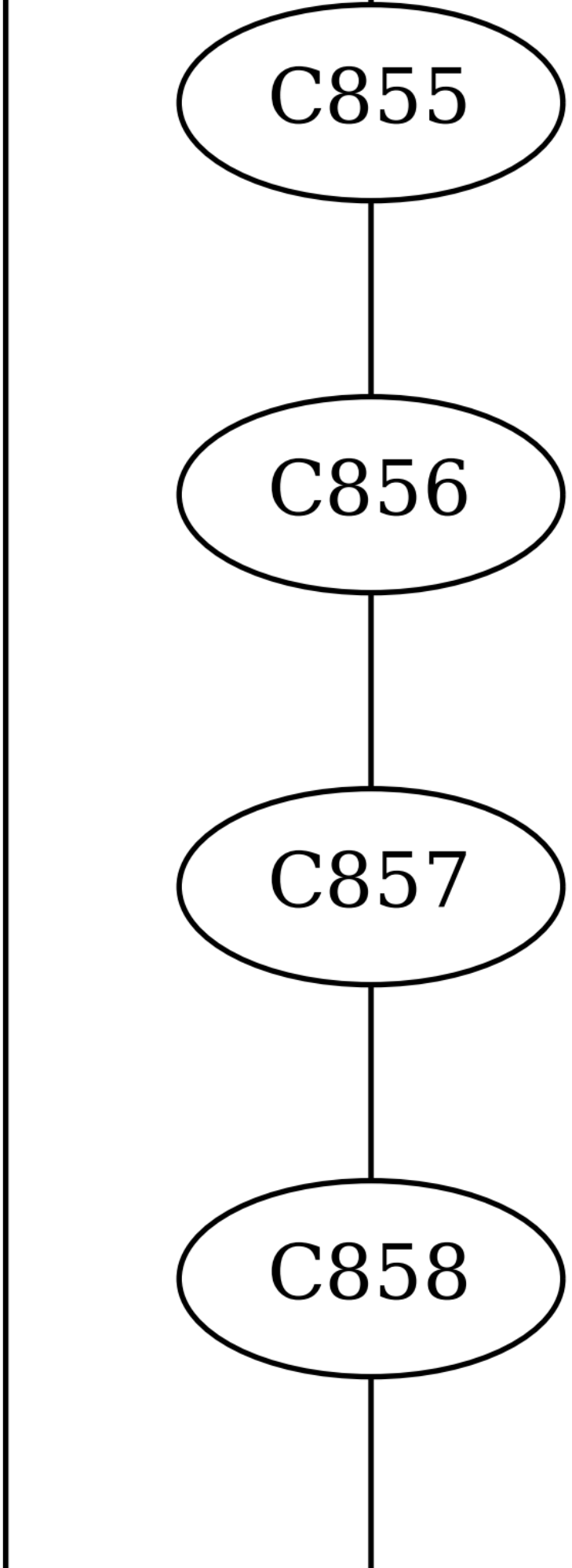
C855
C856
C857
C858

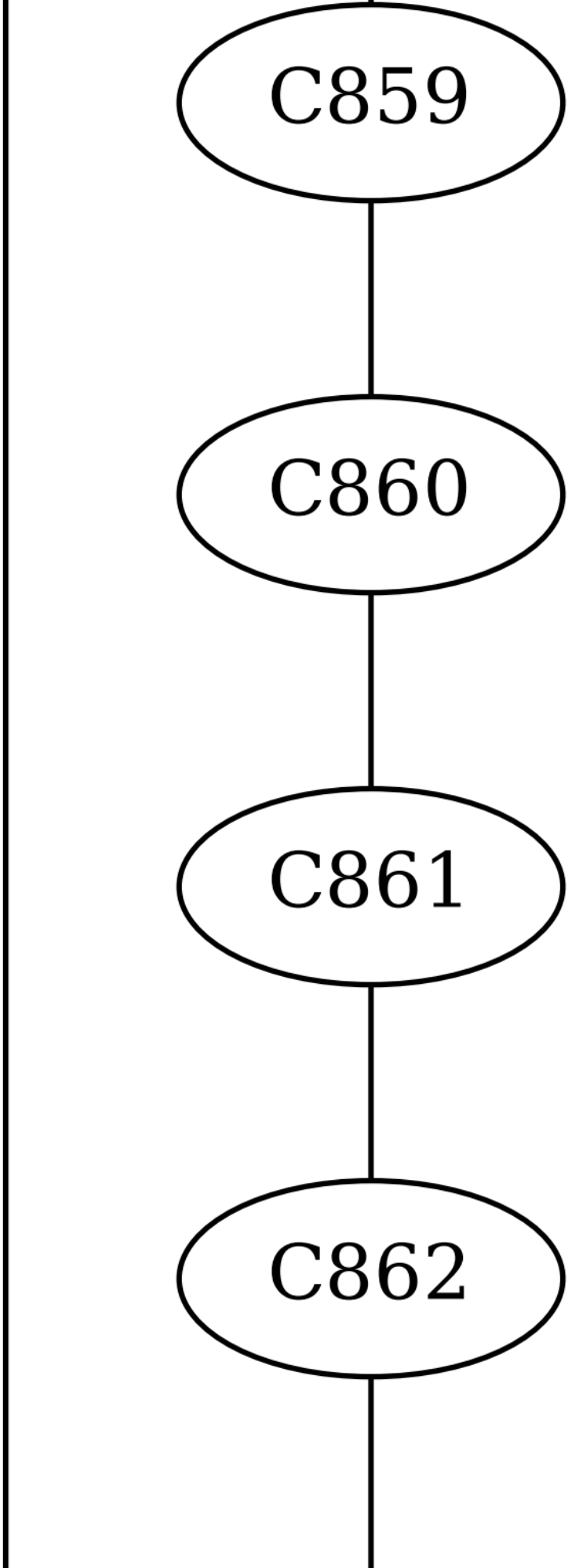
C859
C860
C861
C862

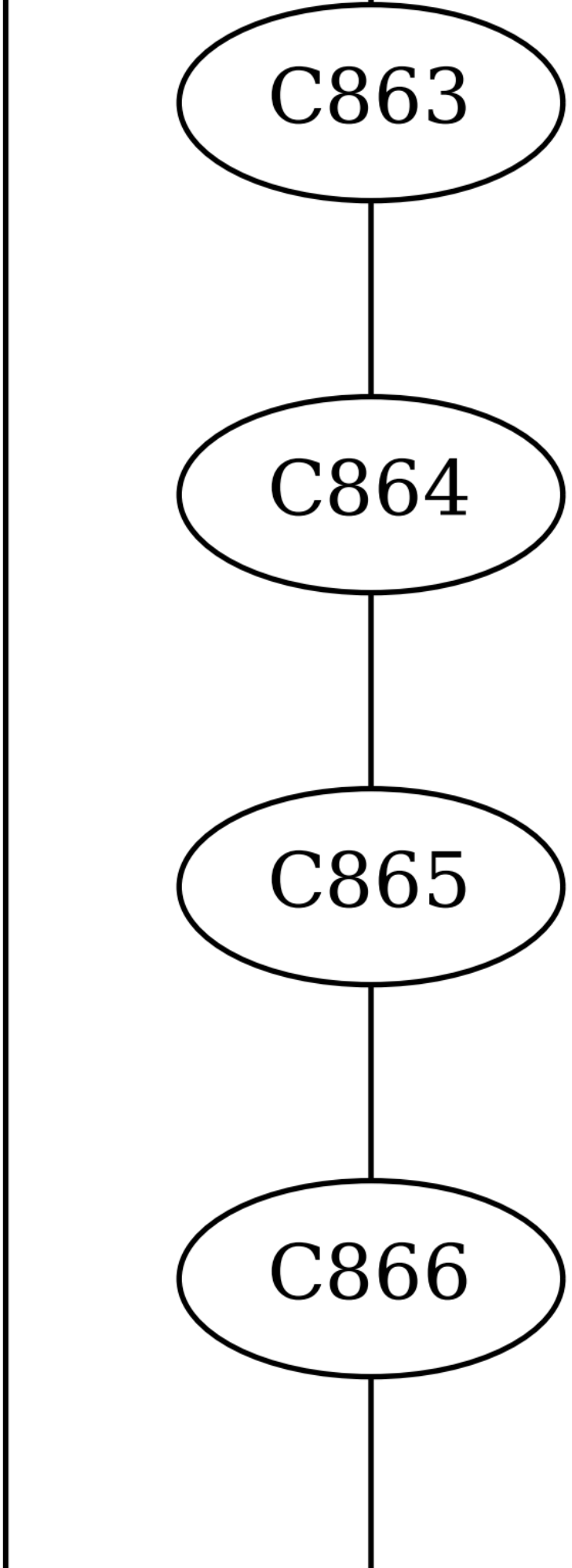
C863
C864
C865
C866

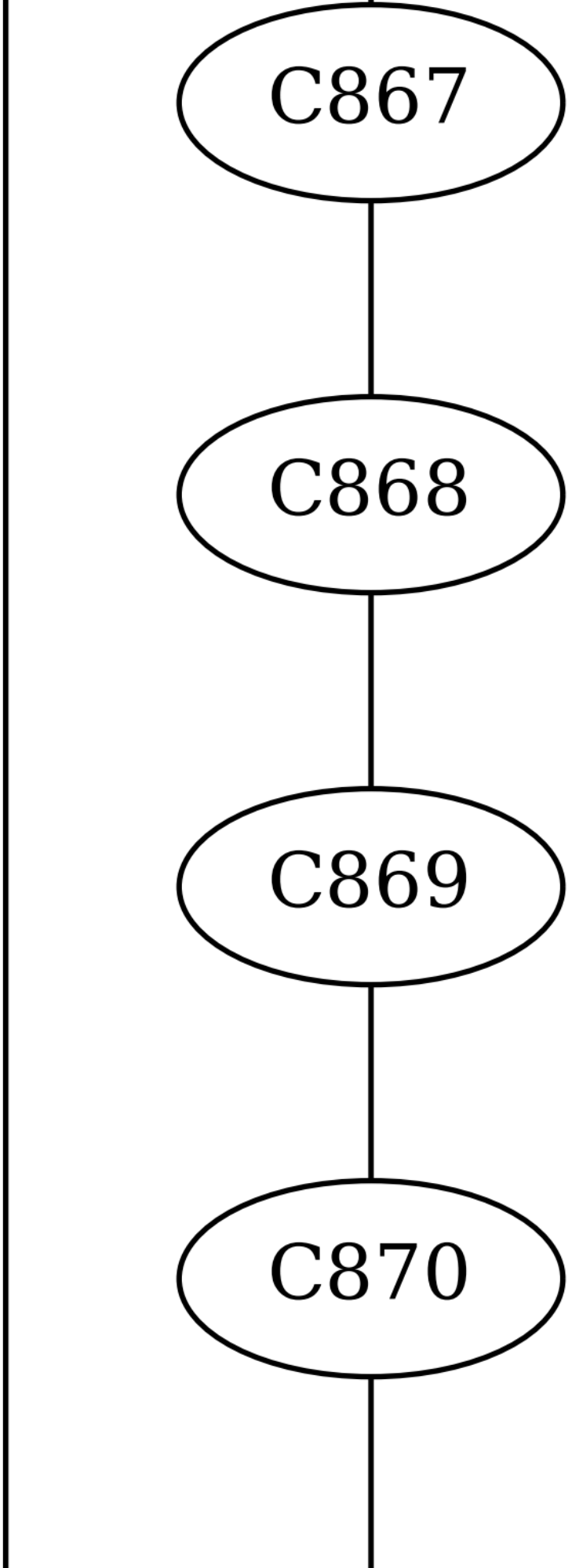
C867
C868
C869
C870

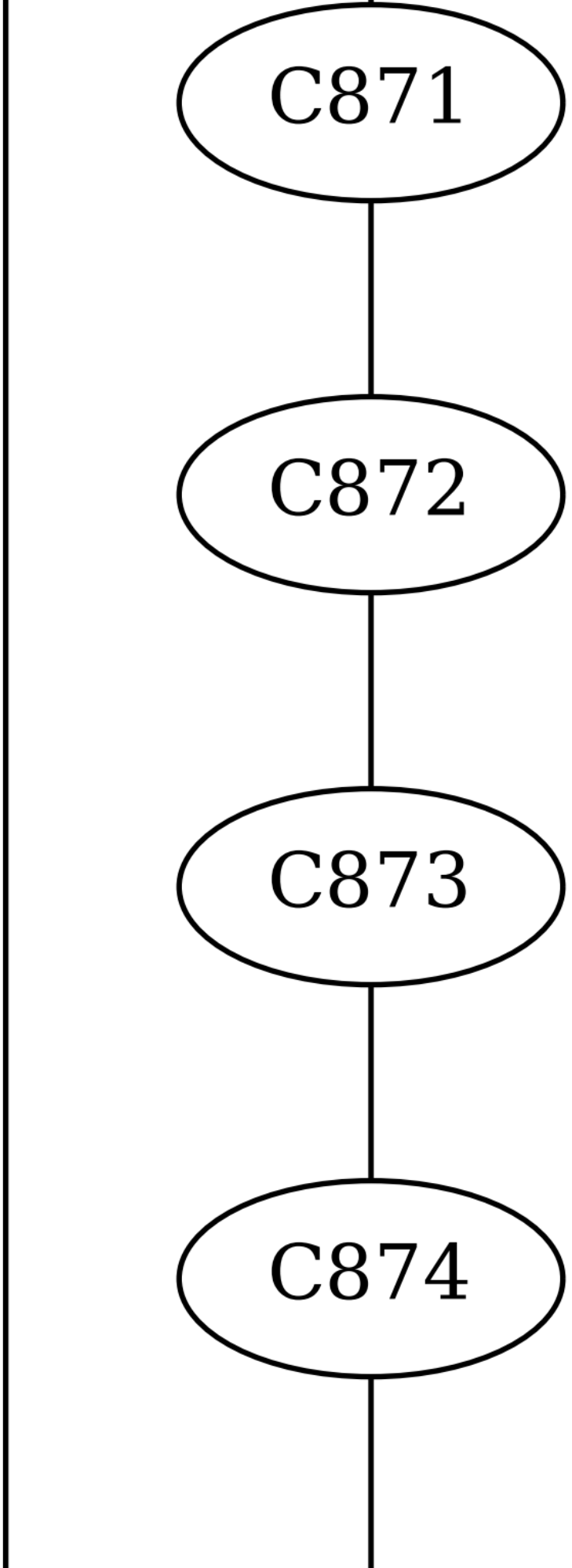
C871
C872
C873
C874

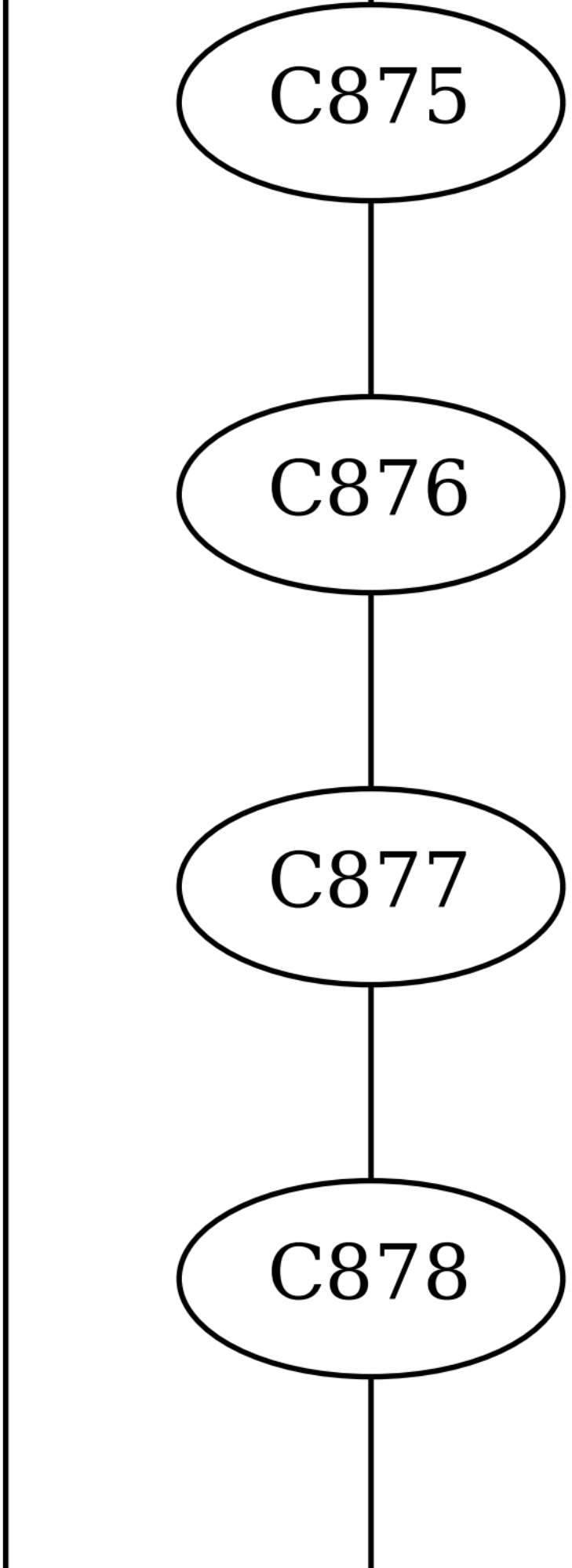
C875
C876
C877
C878

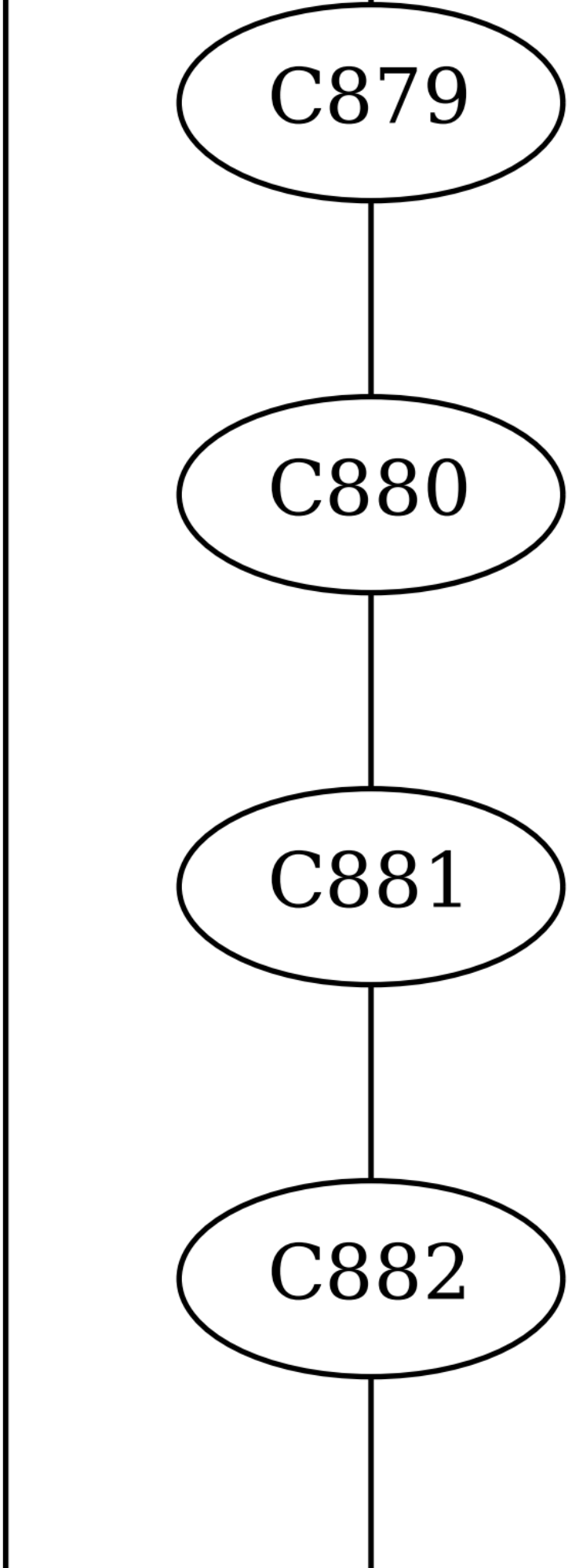
C879
C880
C881
C882

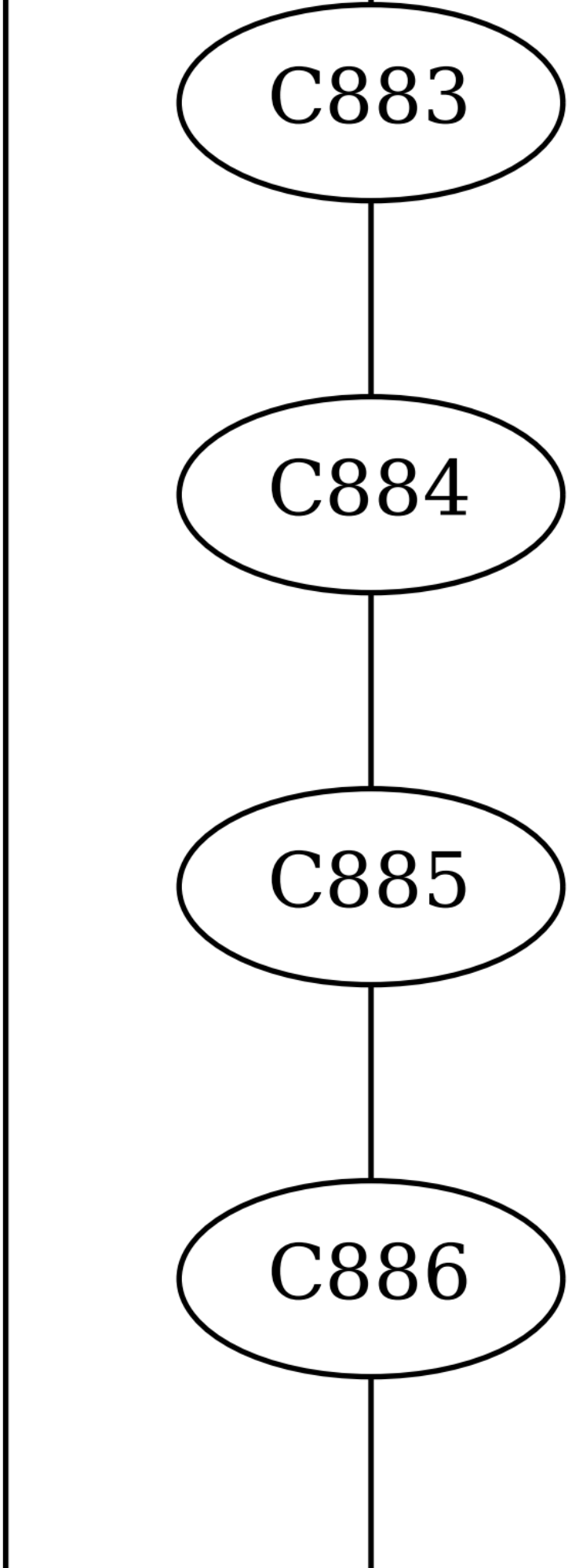
C883
C884
C885
C886

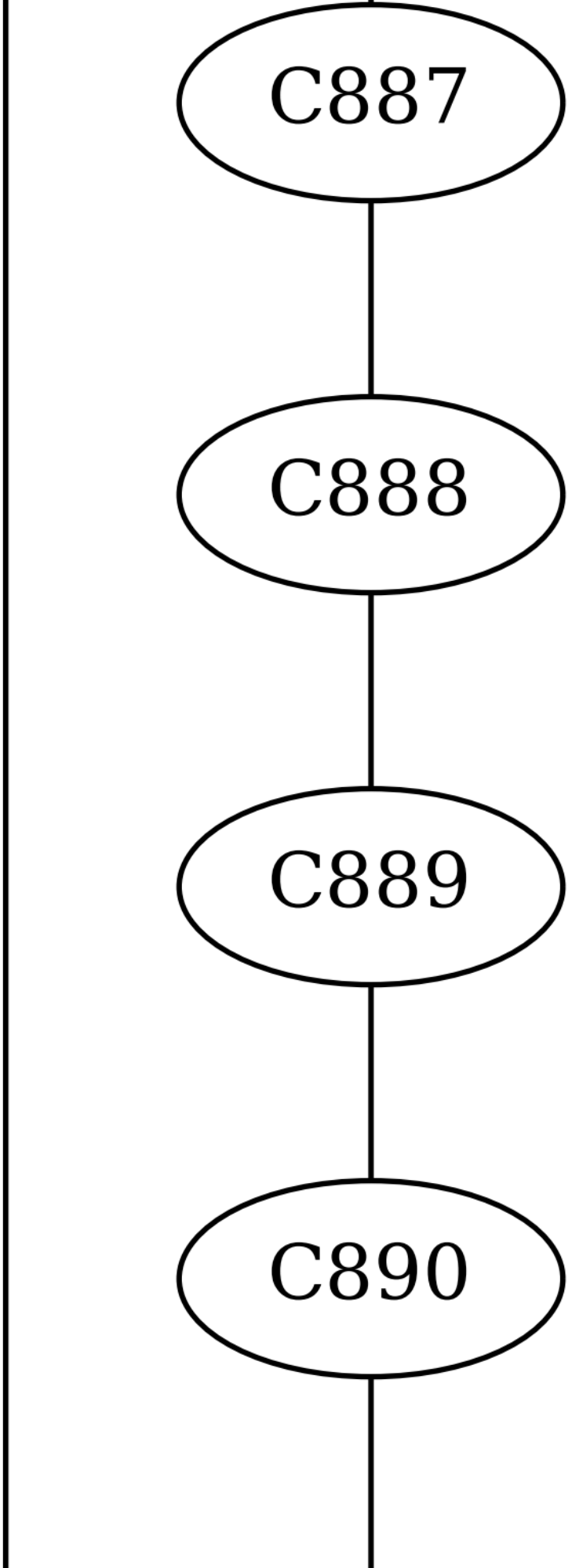
C887
C888
C889
C890

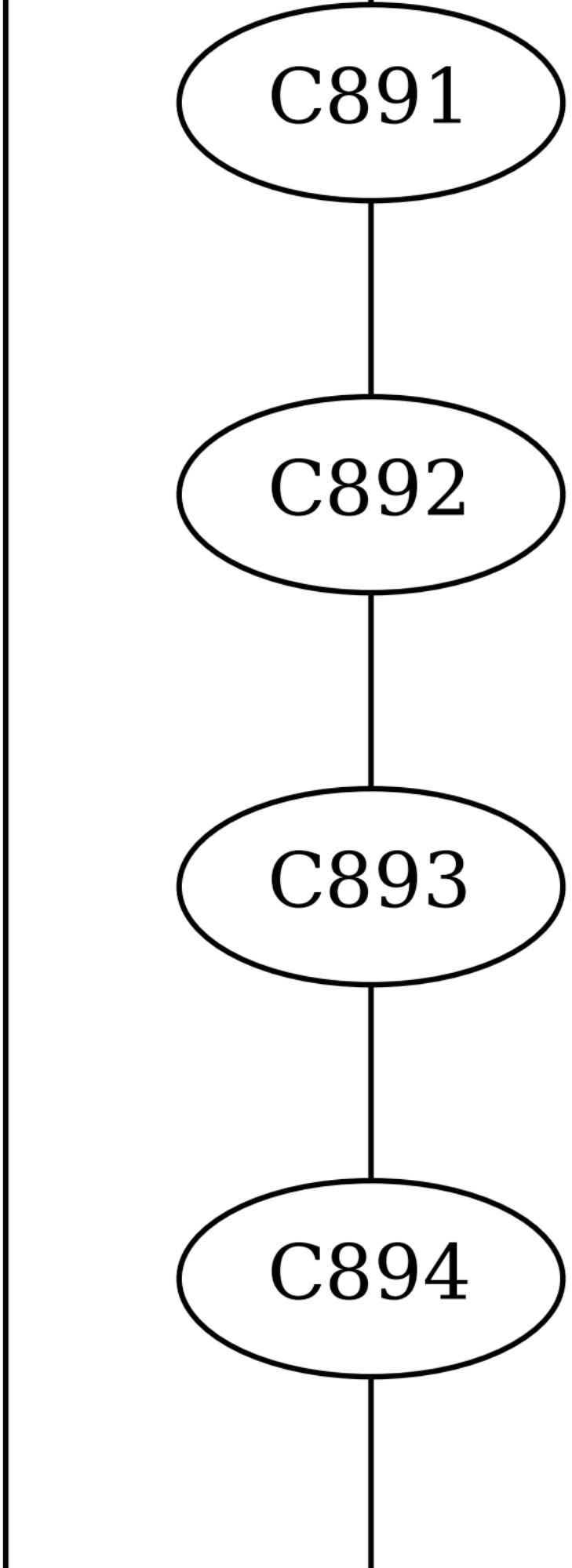
C891
C892
C893
C894

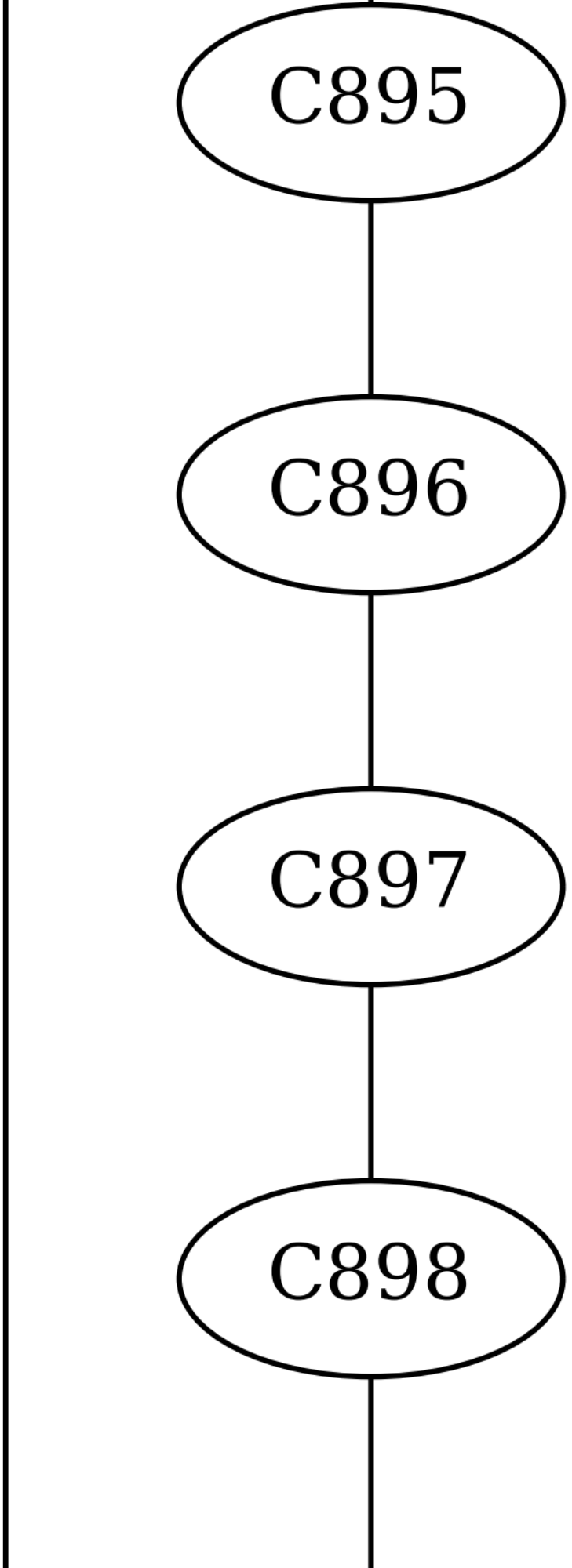
C895
C896
C897
C898

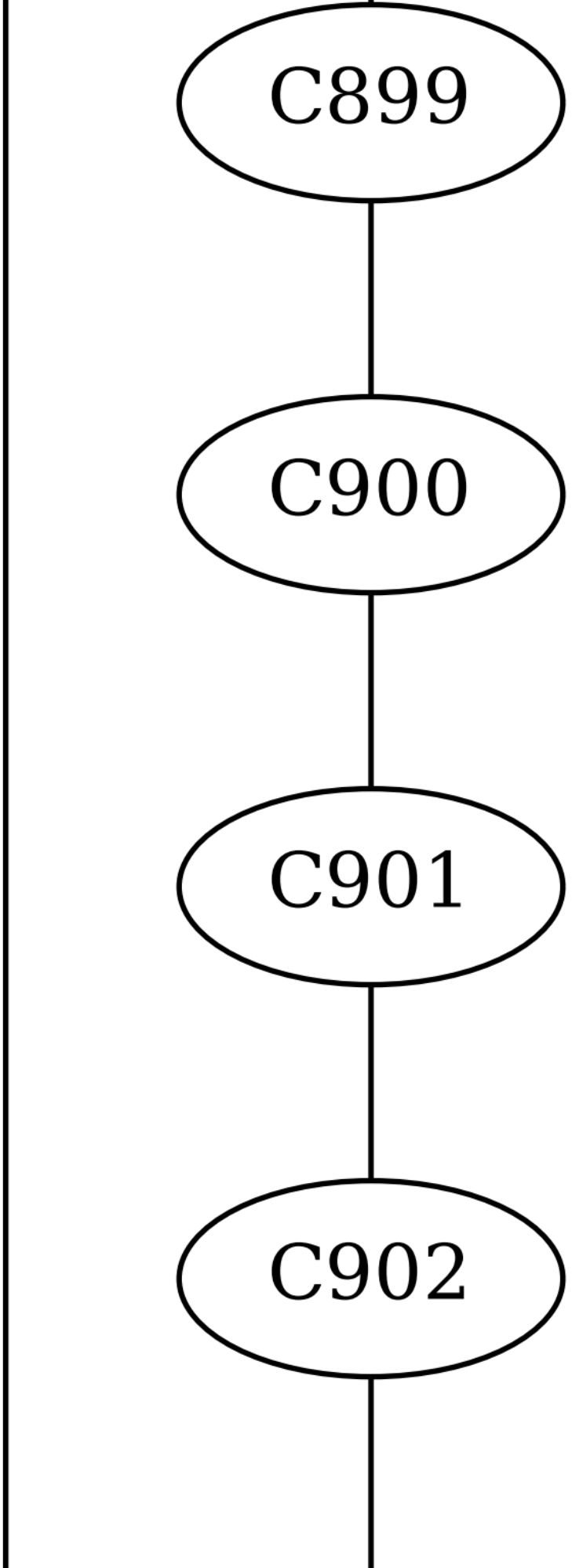
C899
C900
C901
C902

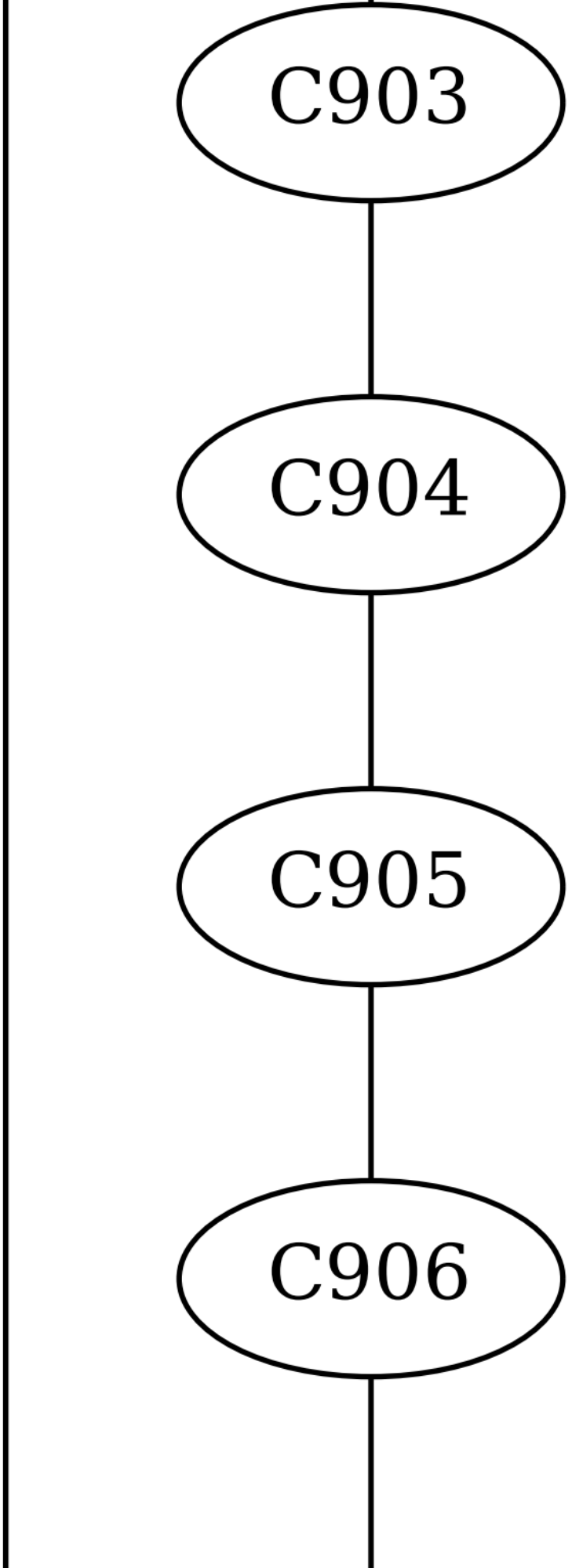
C903
C904
C905
C906

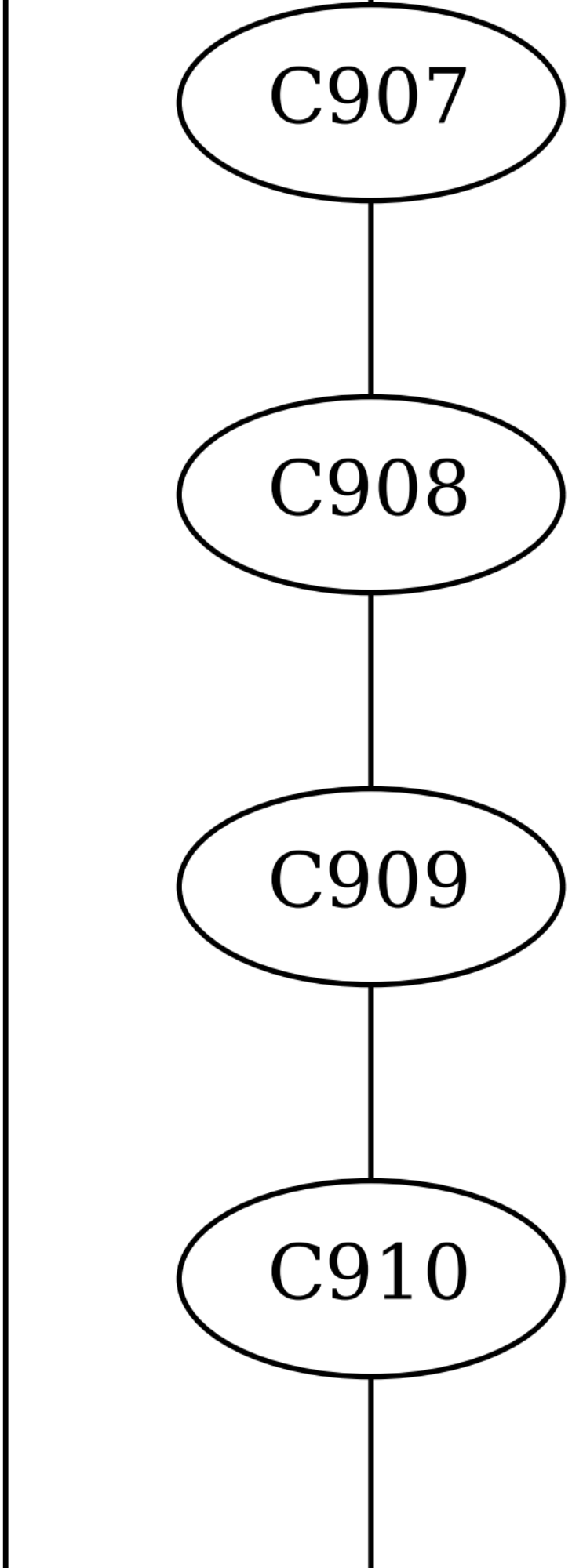
C907
C908
C909
C910

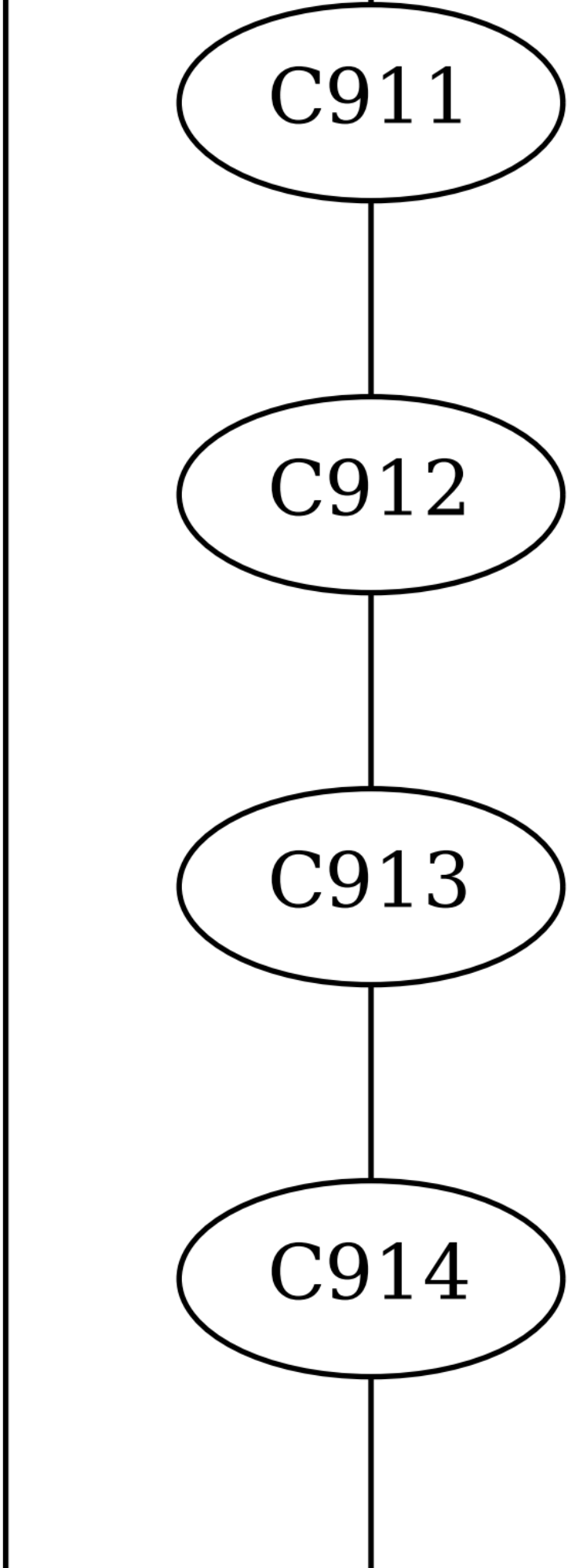
C911
C912
C913
C914

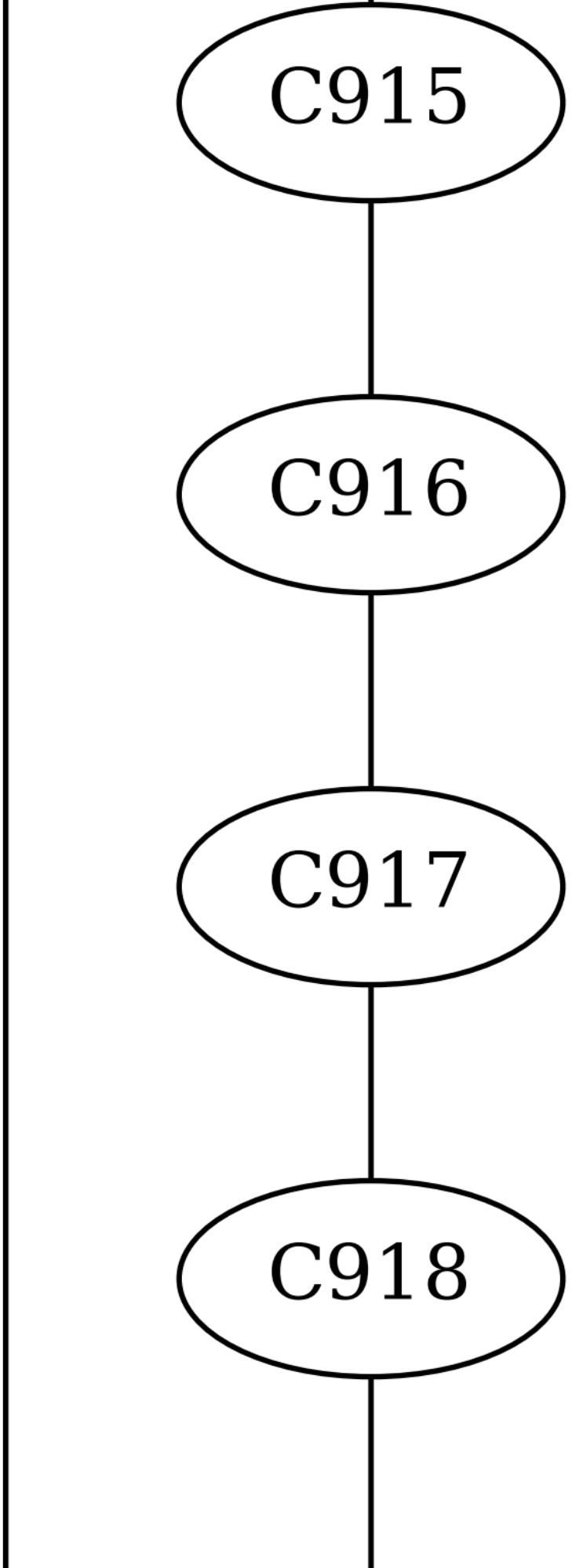
C915
C916
C917
C918

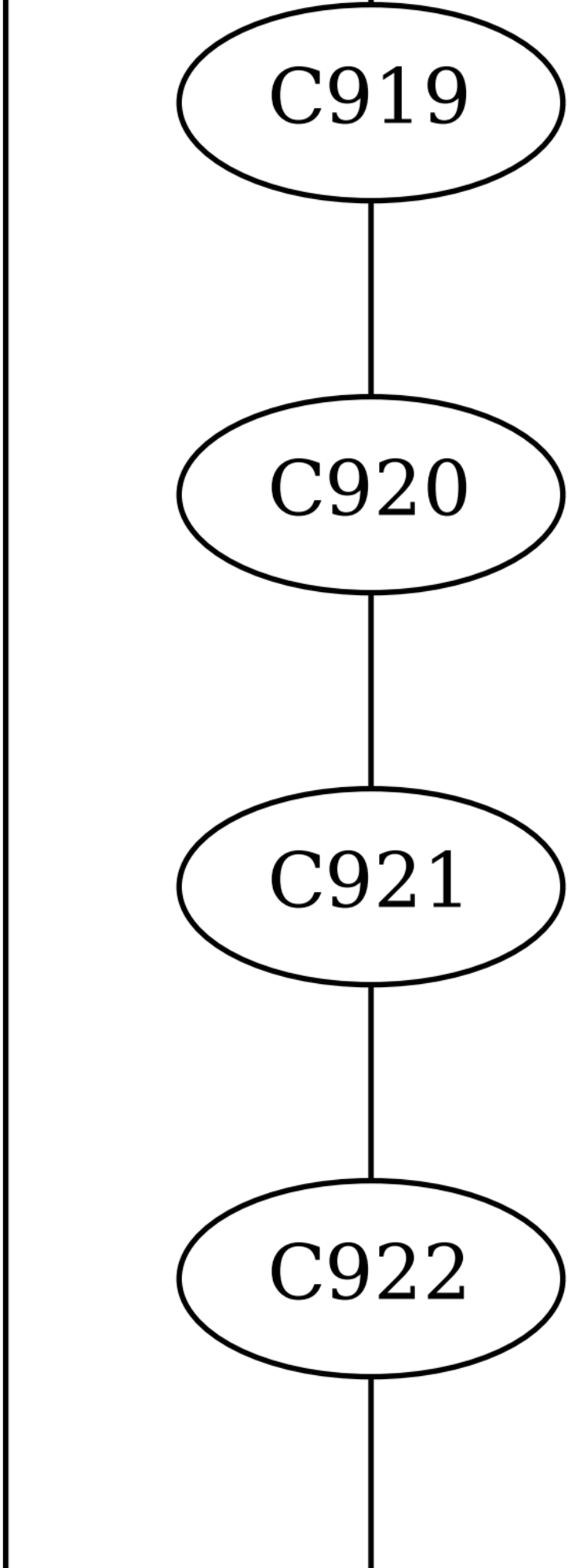
C919
C920
C921
C922

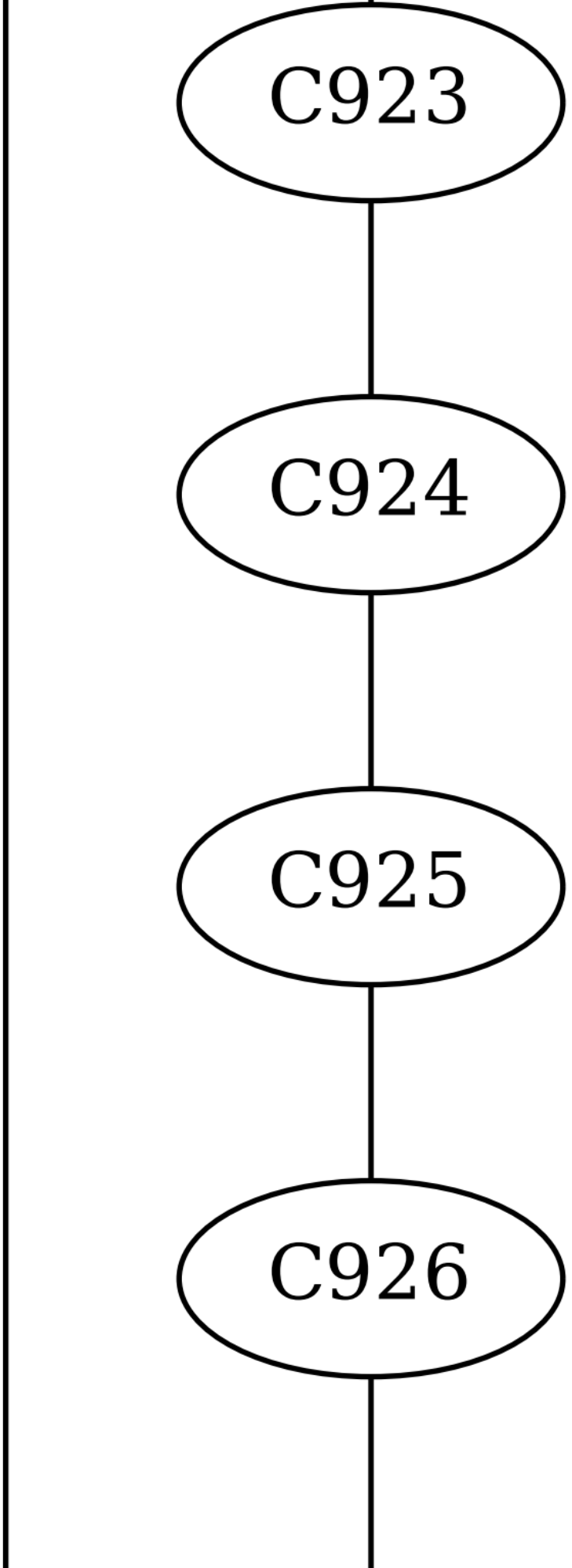
C923
C924
C925
C926

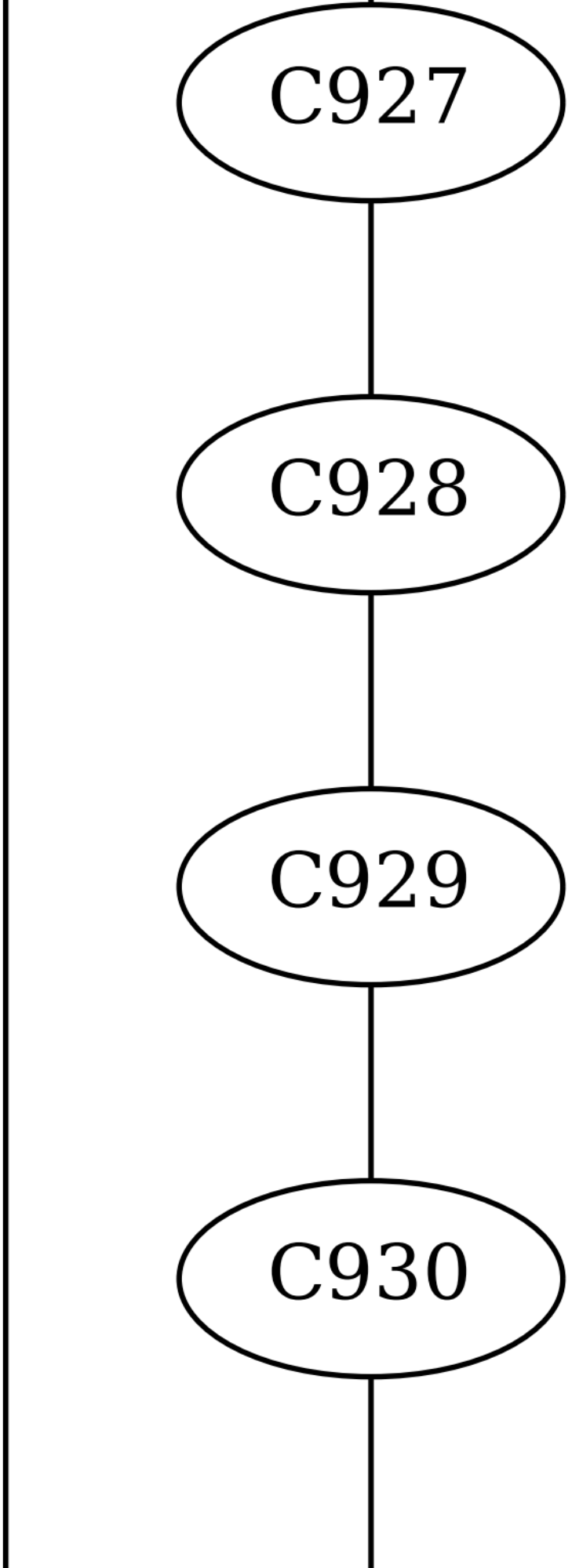
C927
C928
C929
C930

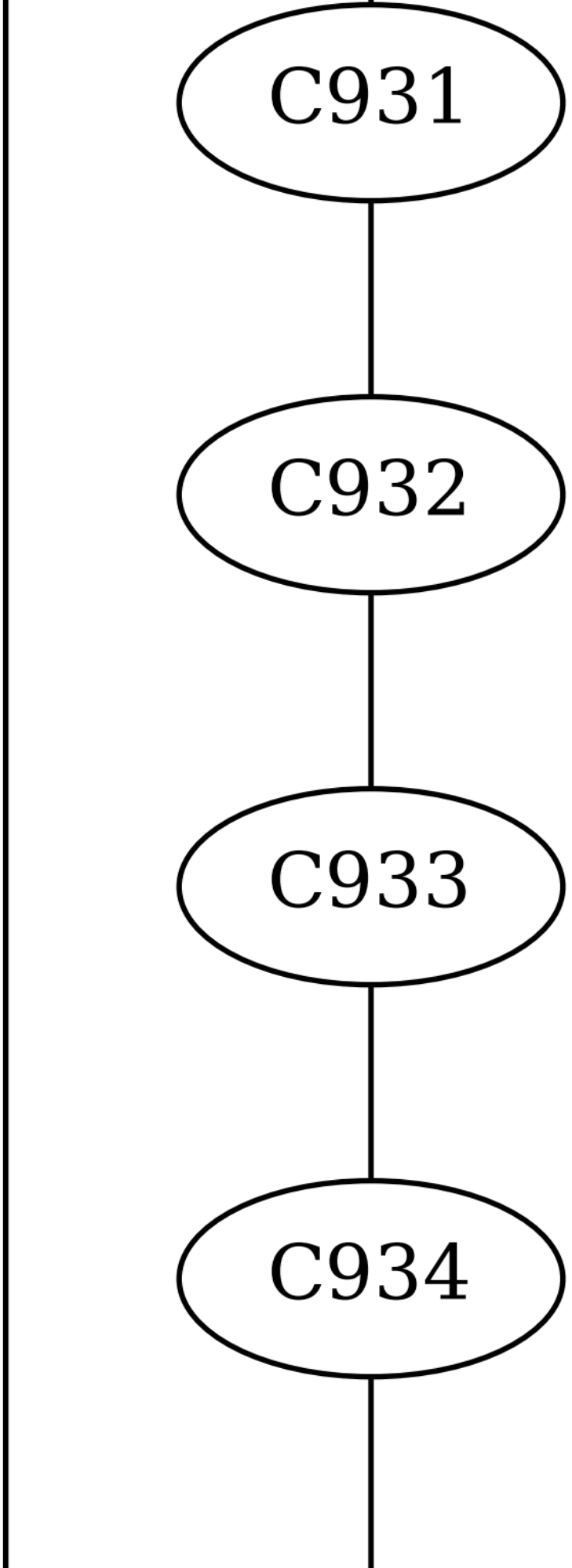
C931
C932
C933
C934

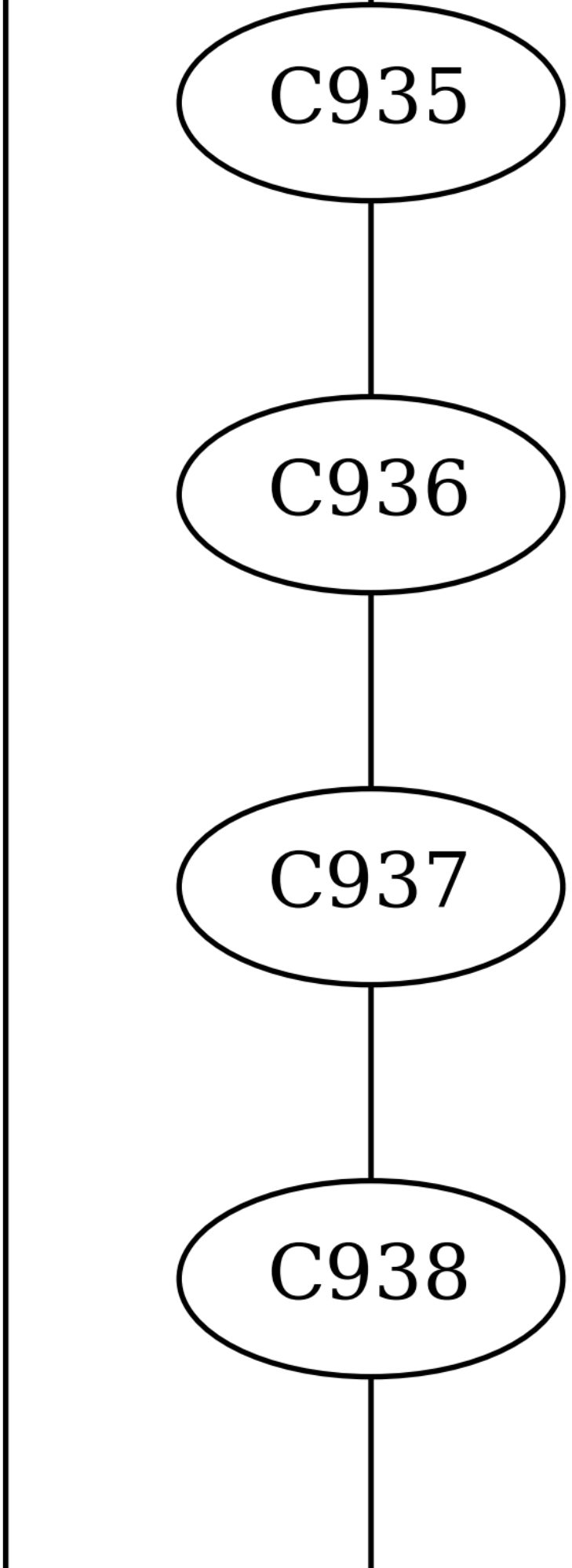
C935
C936
C937
C938

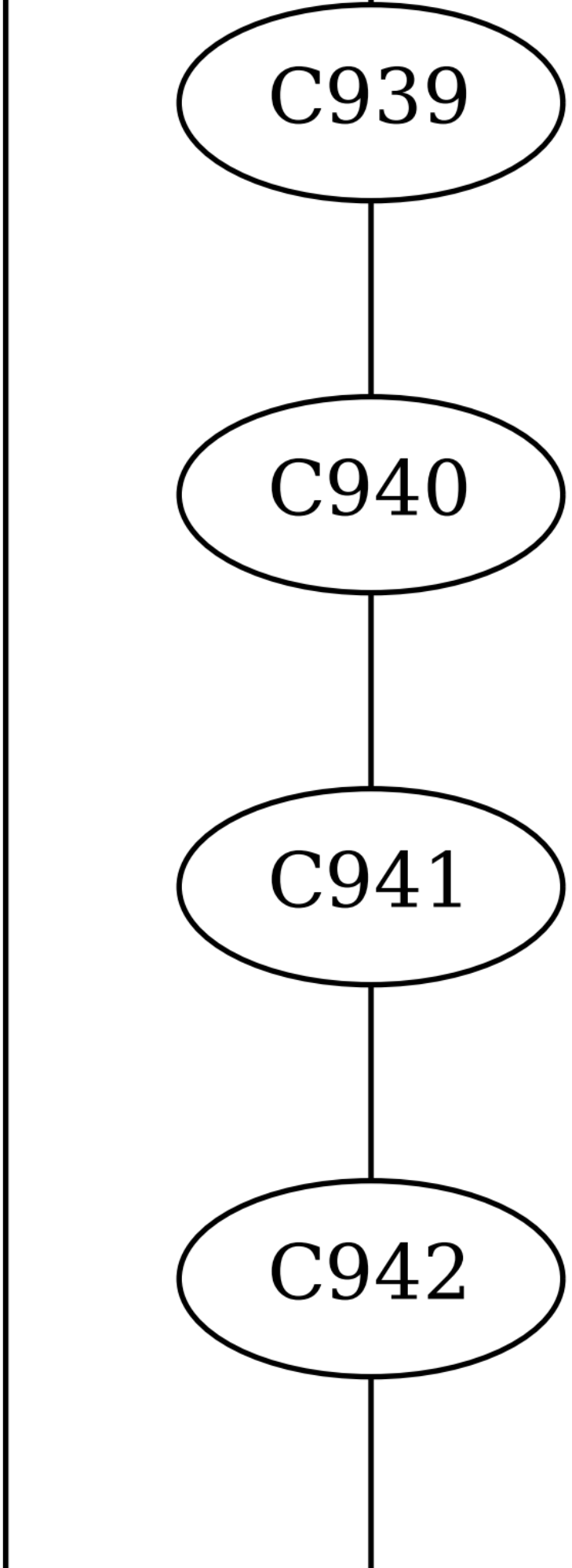
C939
C940
C941
C942

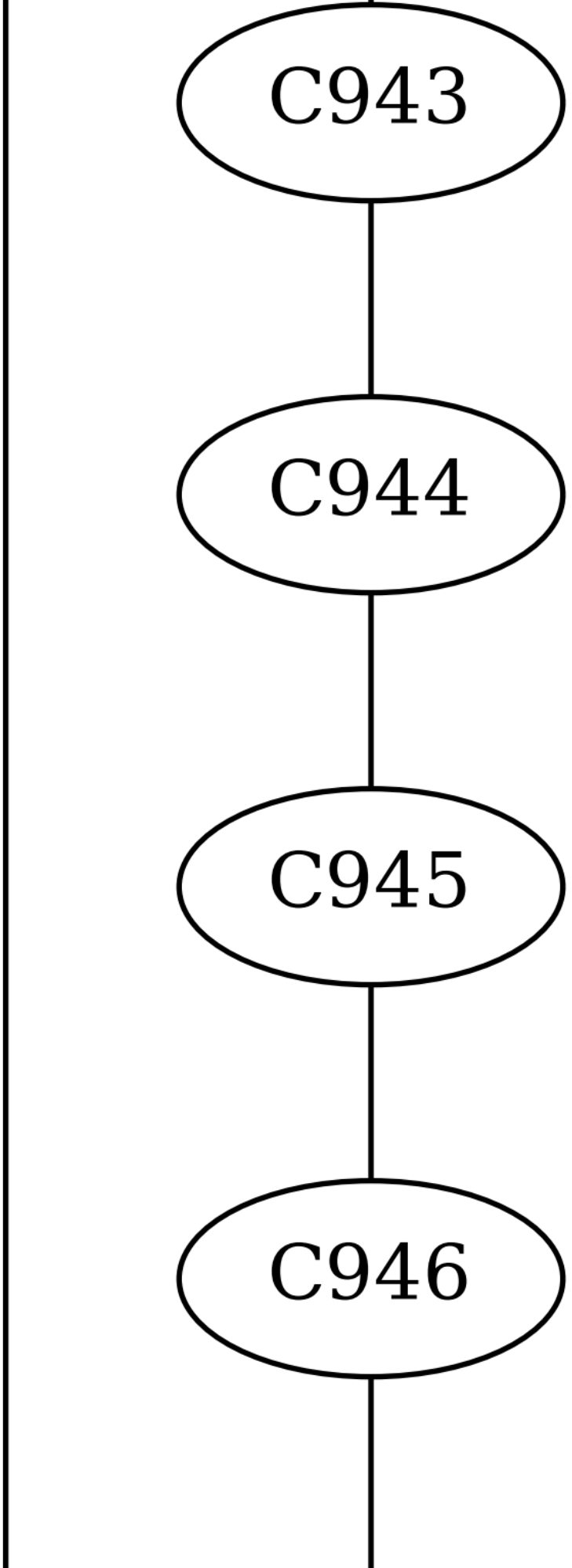
C943
C944
C945
C946

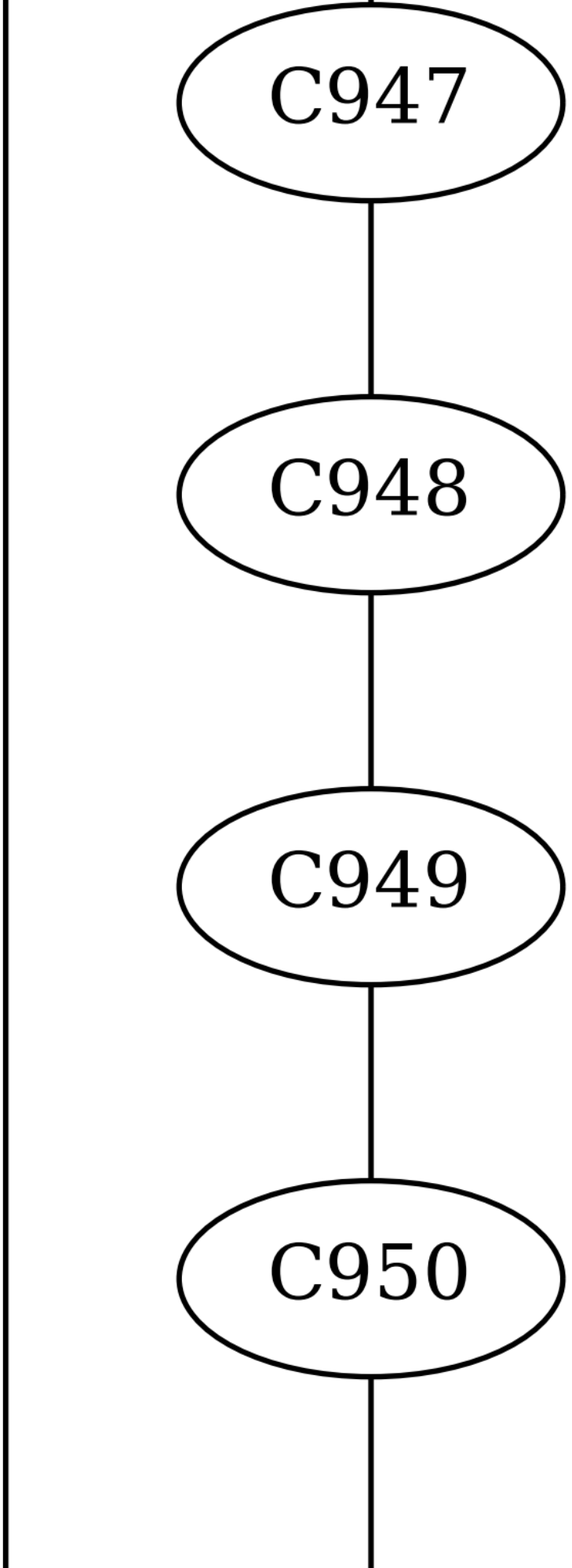
C947
C948
C949
C950

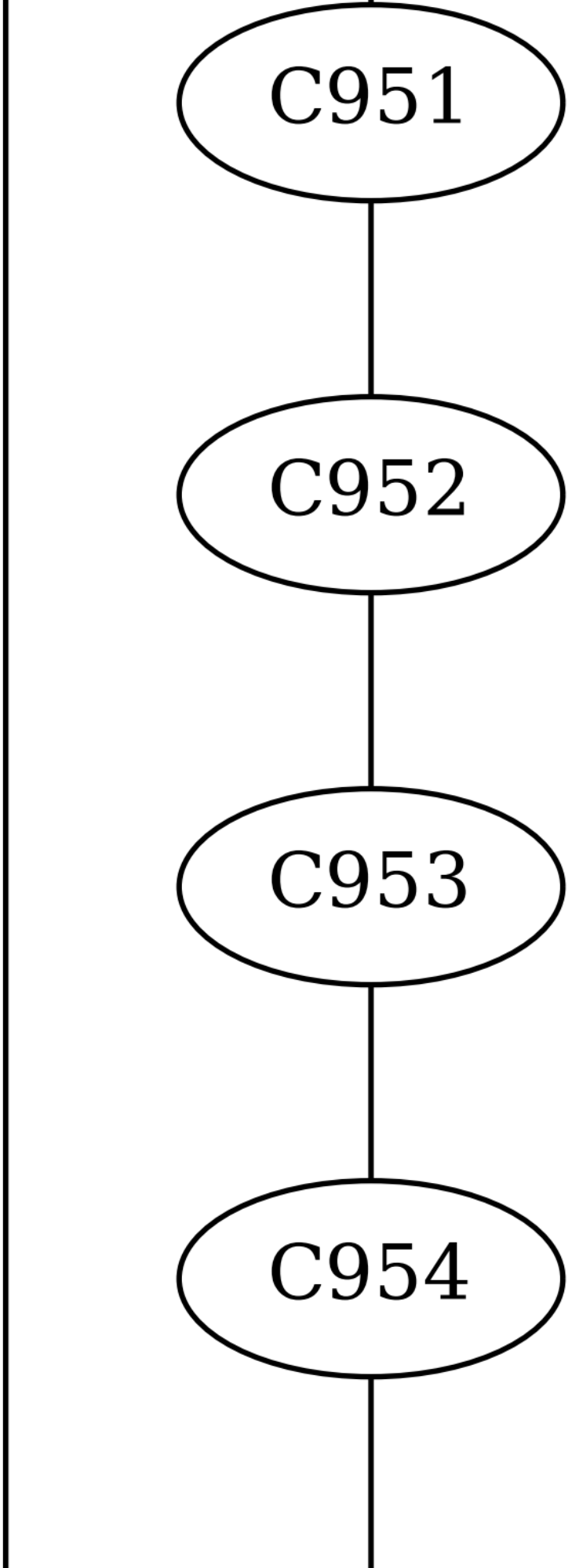
C951
C952
C953
C954

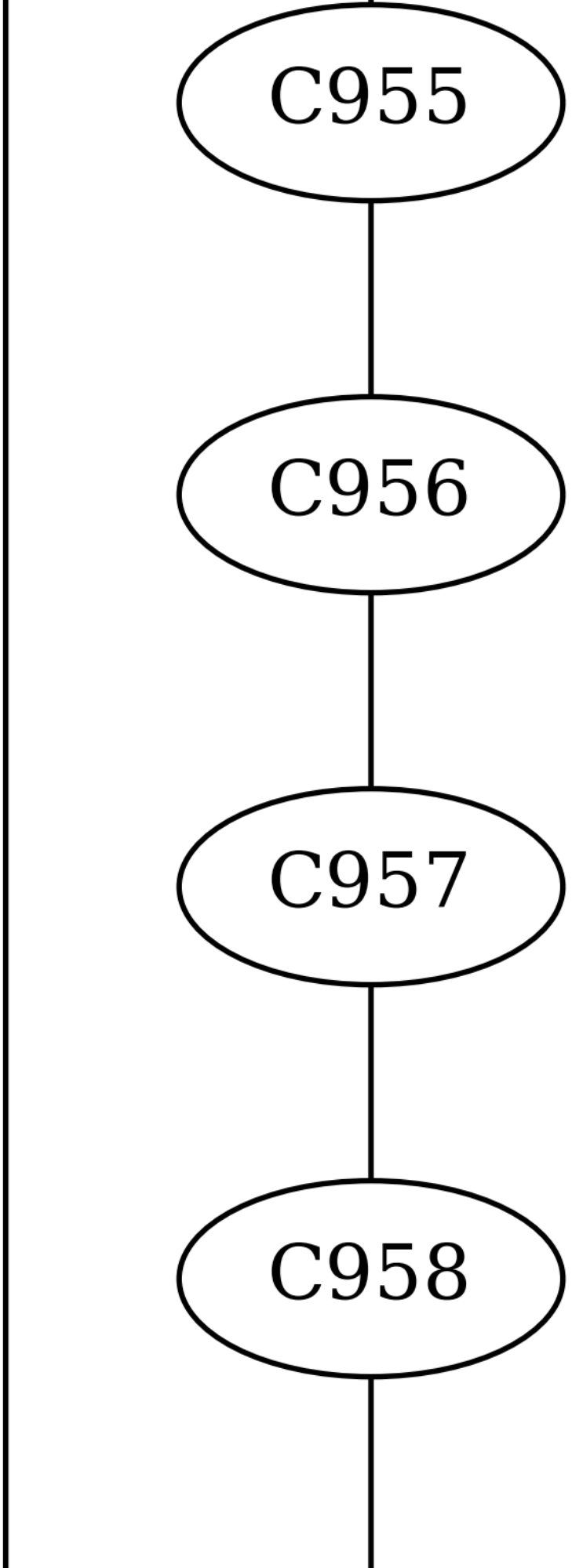
C955
C956
C957
C958

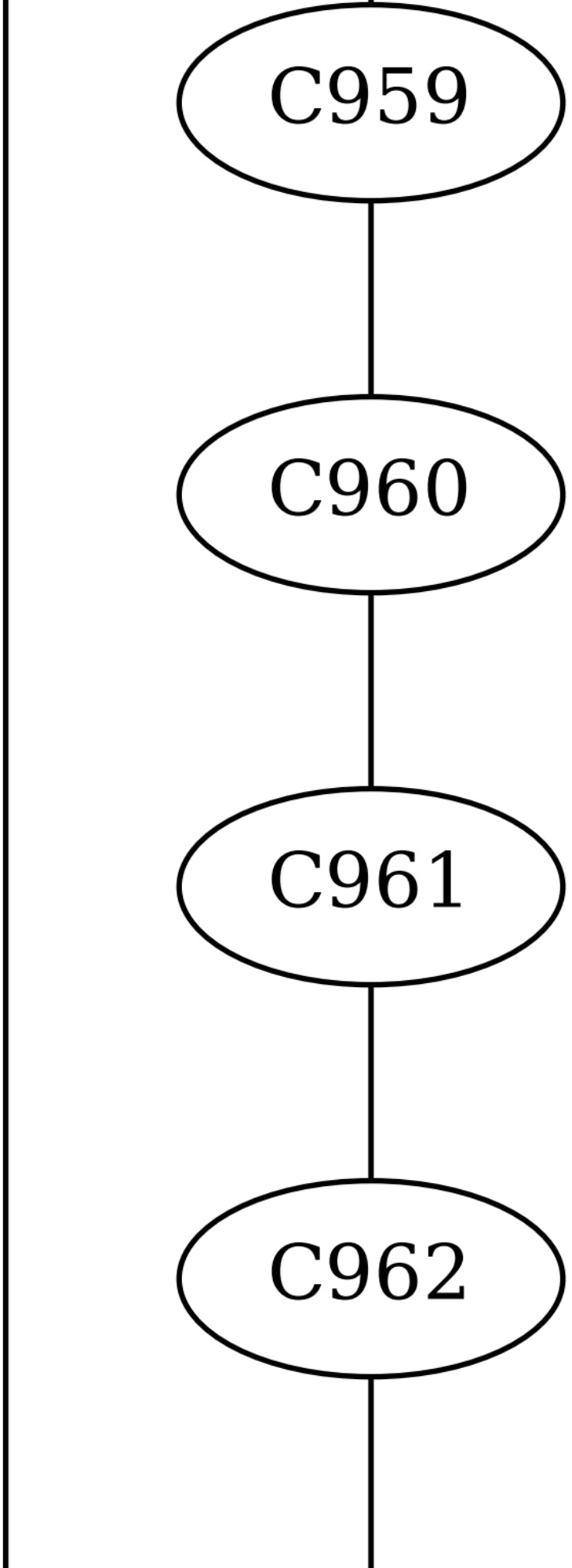
C959
C960
C961
C962

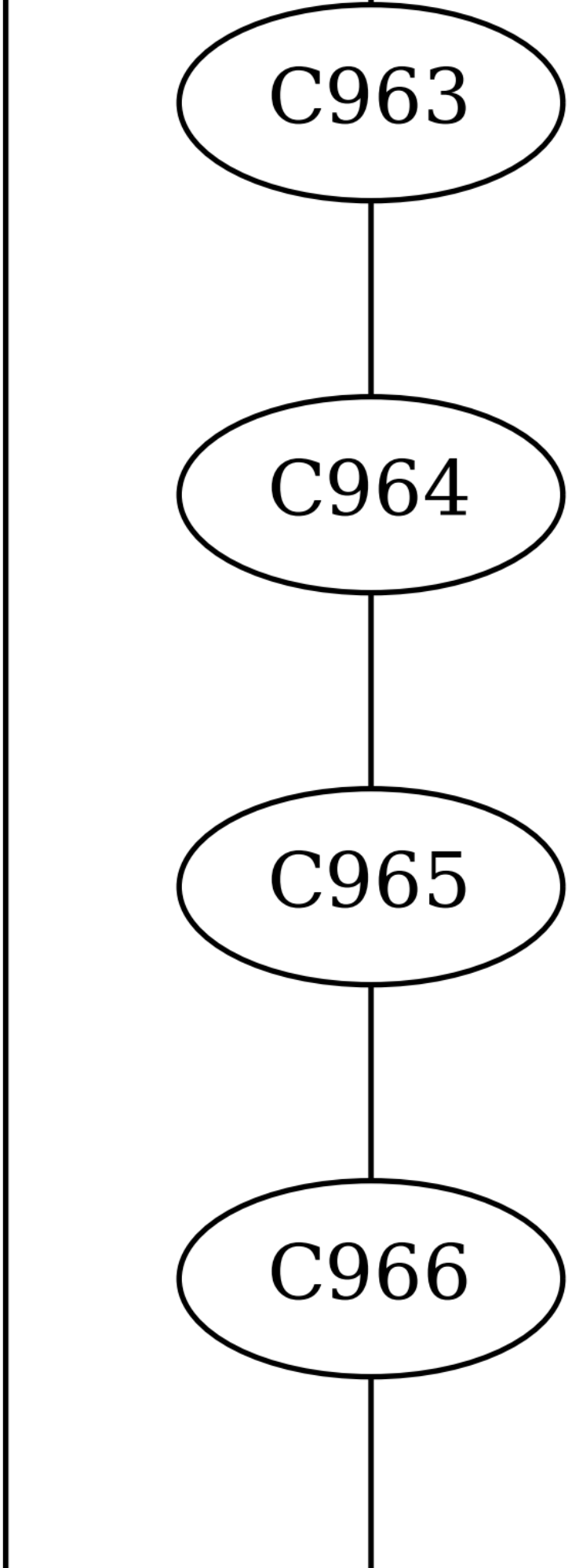
C963
C964
C965
C966

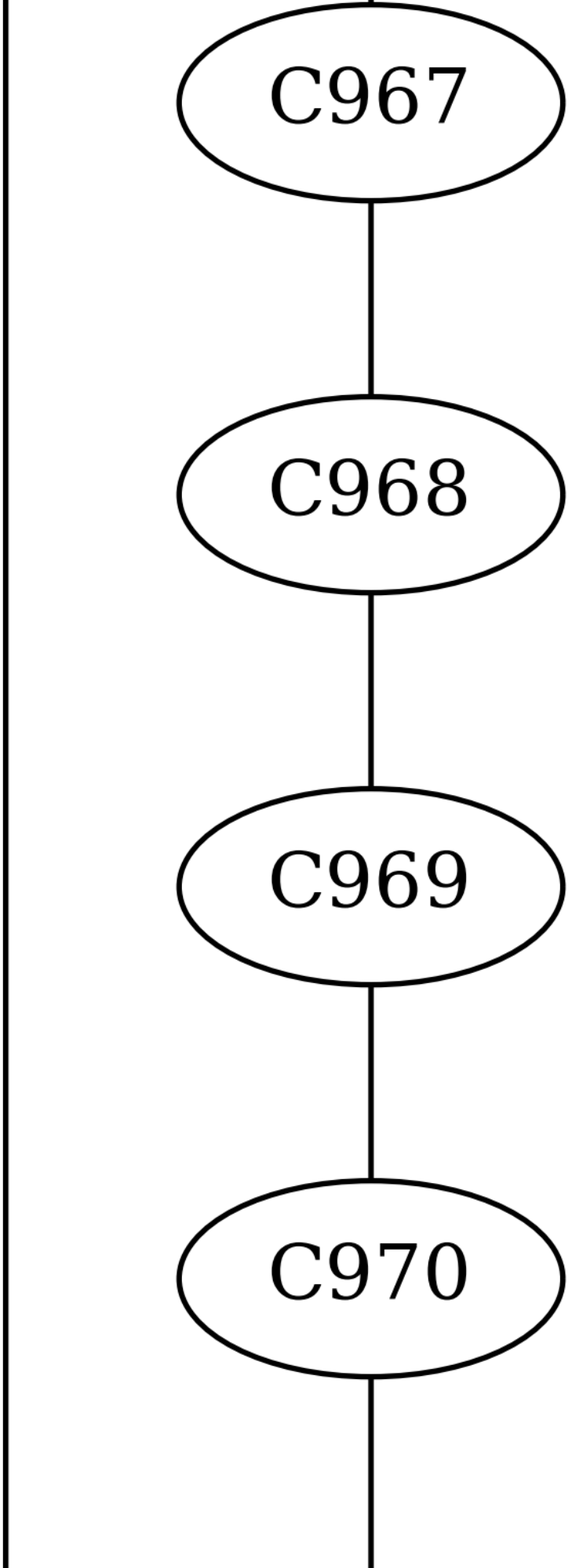
C967
C968
C969
C970

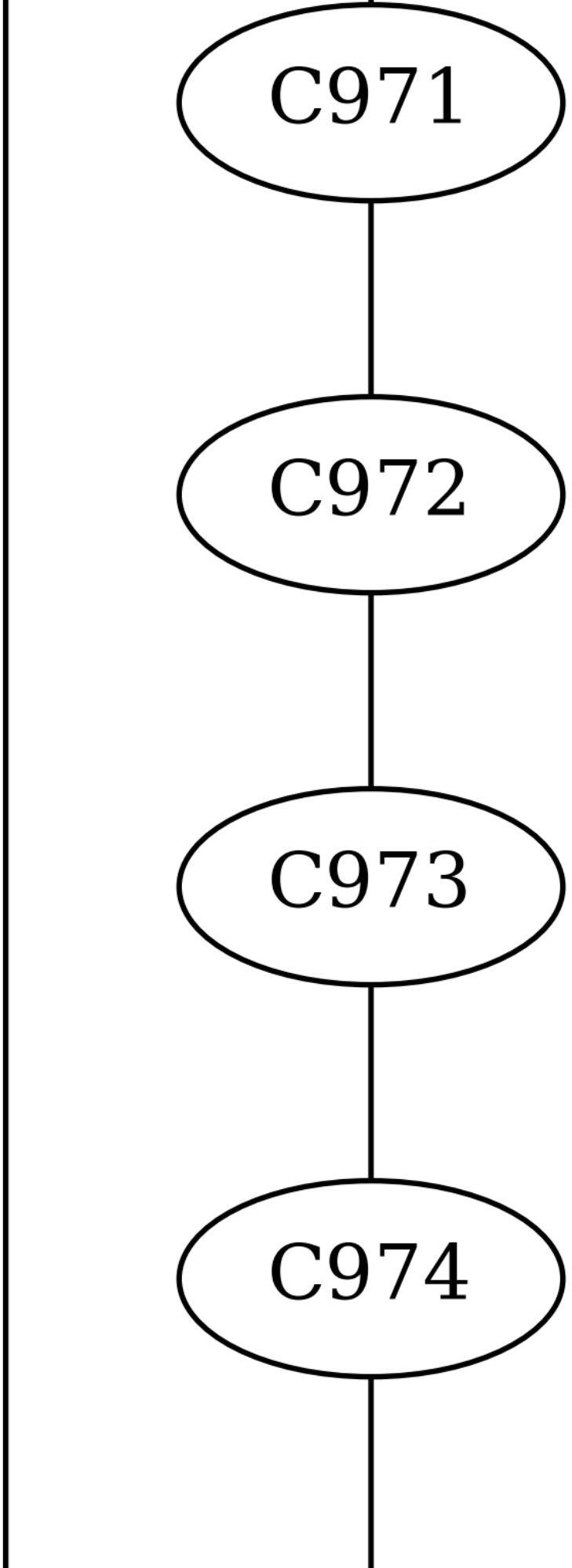
C971
C972
C973
C974

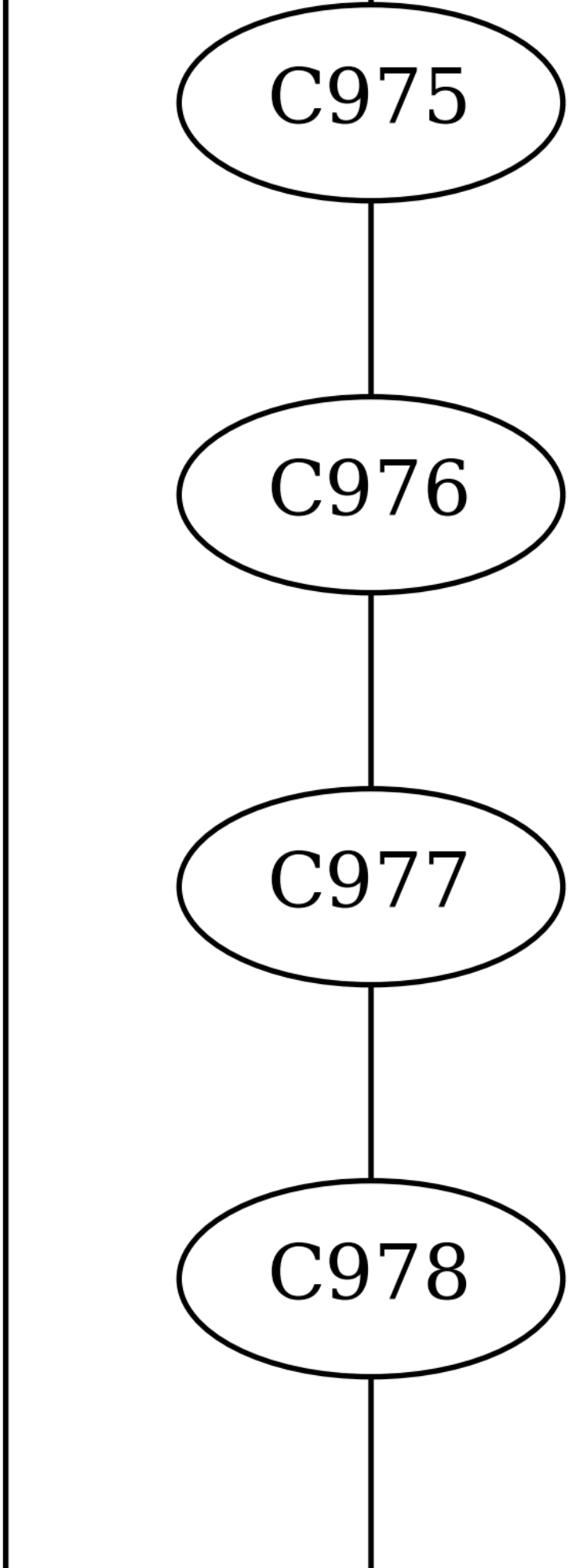
C975
C976
C977
C978

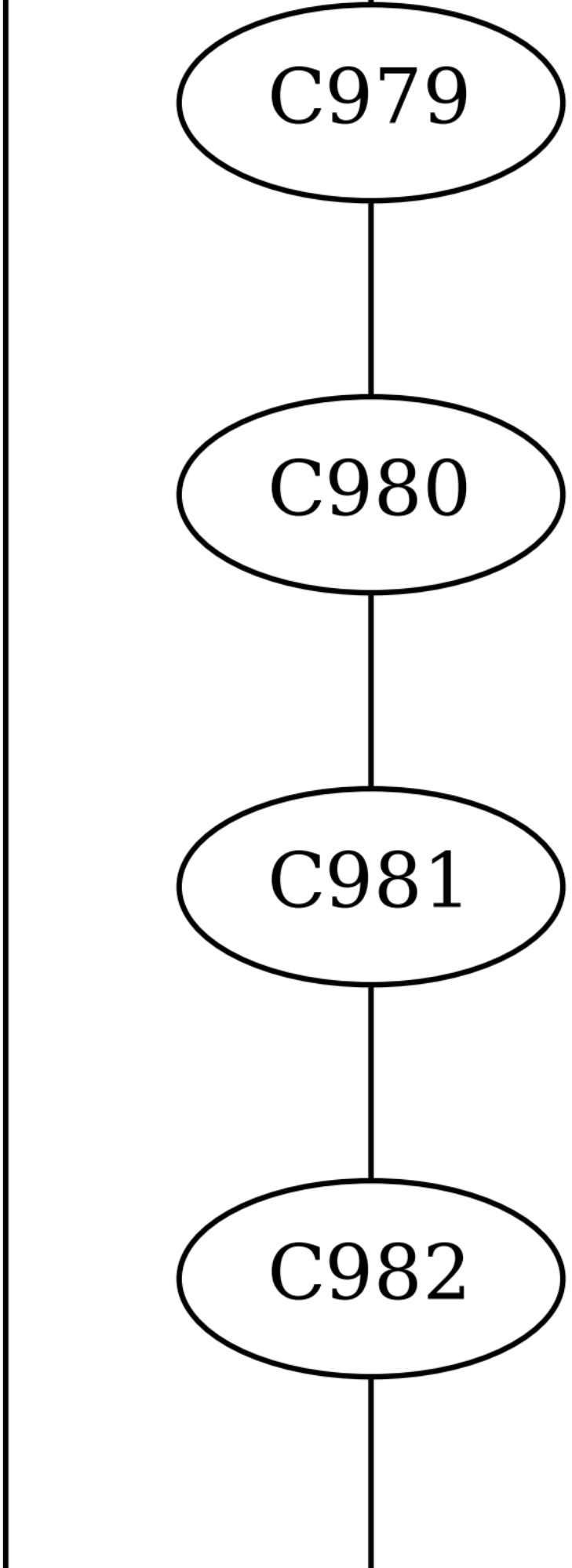
C979
C980
C981
C982

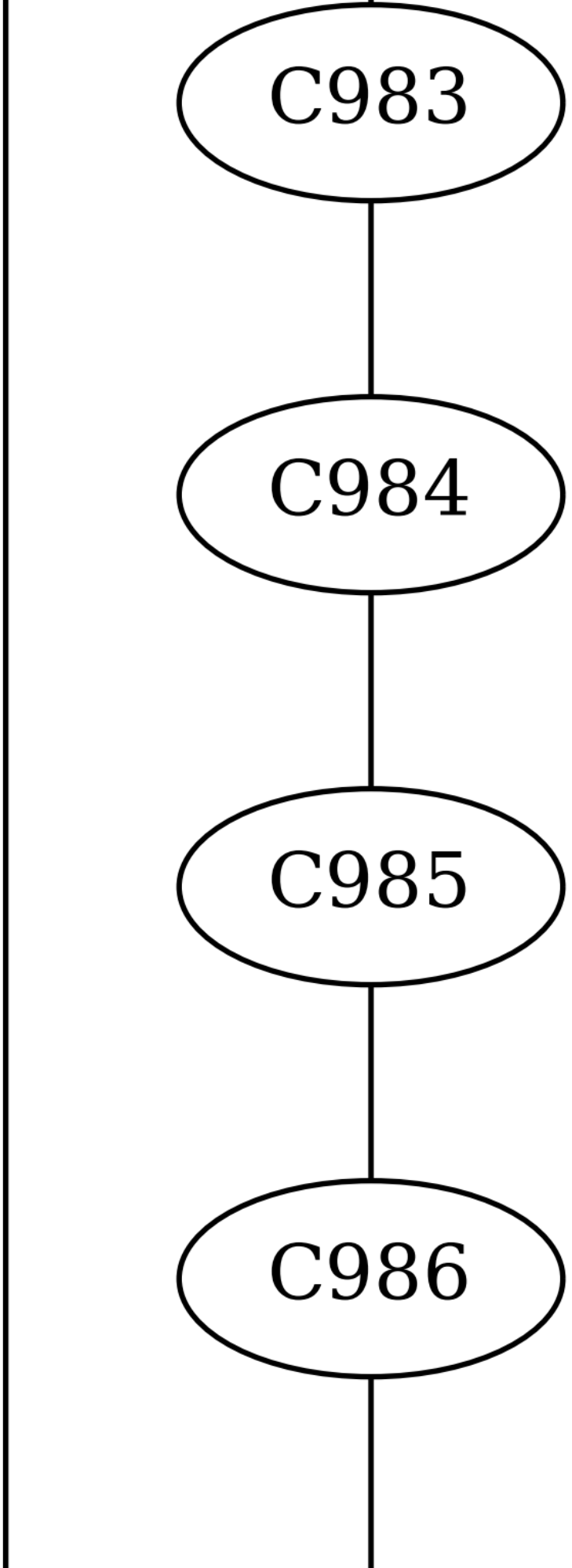
C983
C984
C985
C986

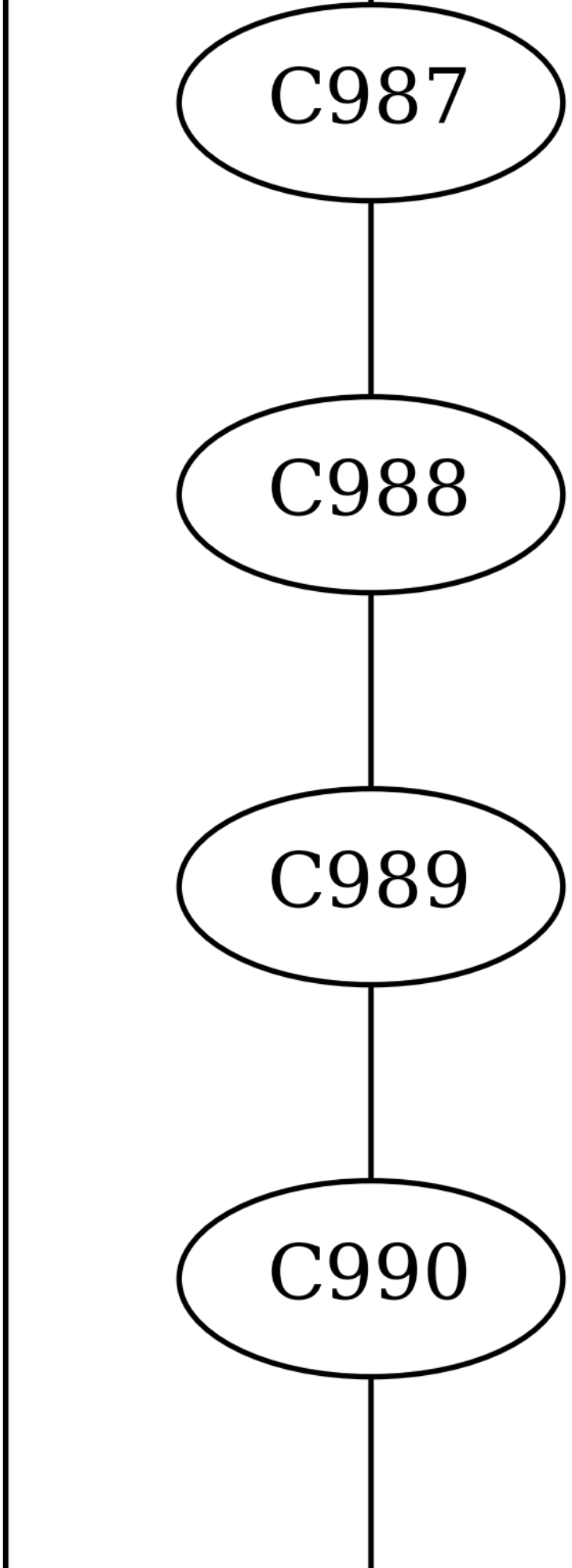
C987
C988
C989
C990

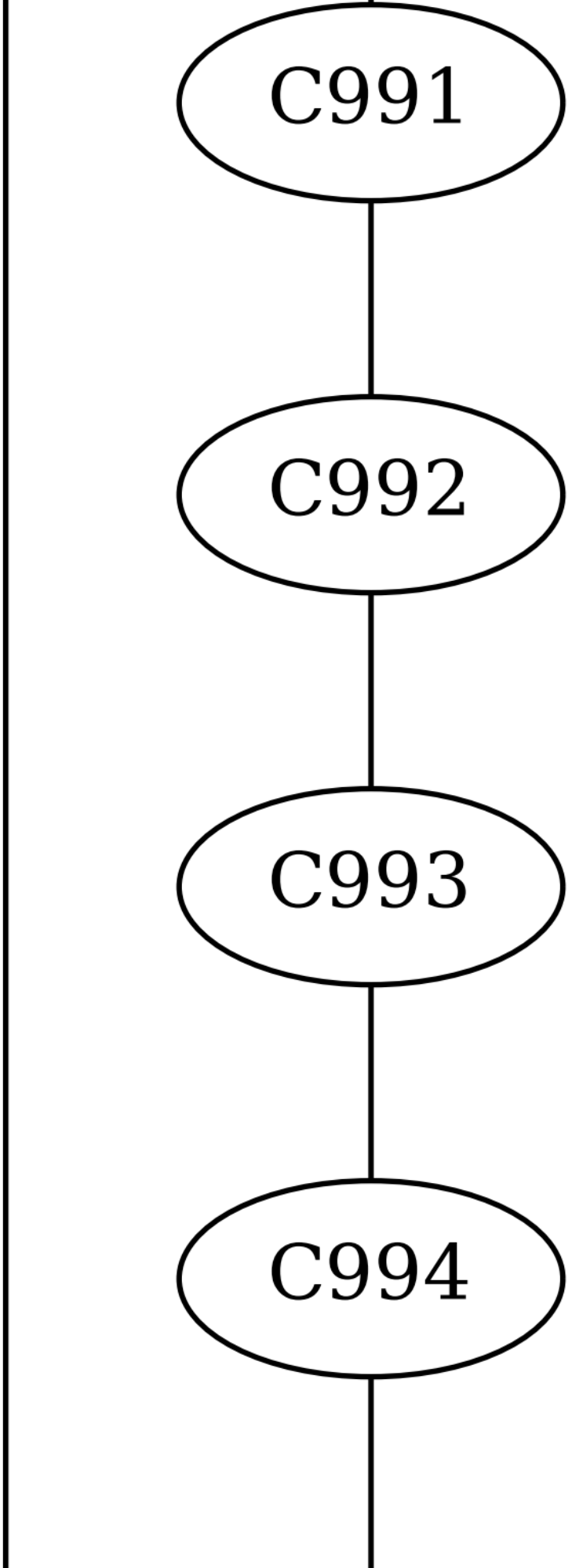
C991
C992
C993
C994

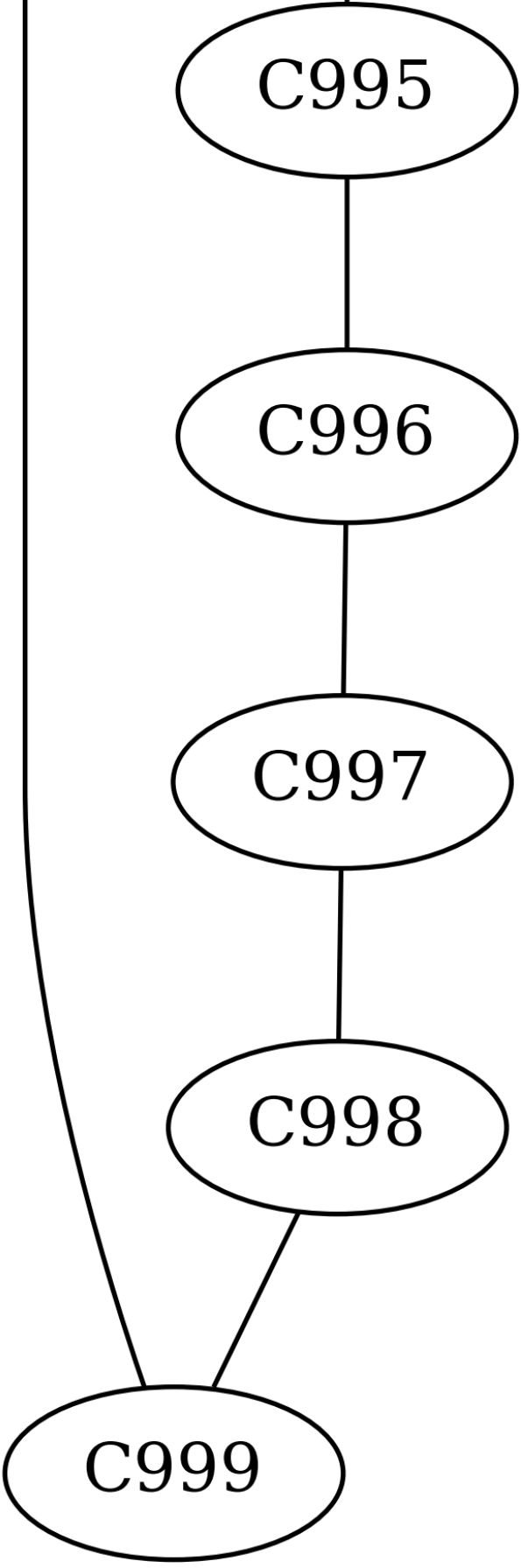
C995
C996
C997
C998
C999